VIN PLATE DECODING INFORMATION

1	2	3	4	5	6	7	8	9	10	11	12 thru 17
Country	**Make**	**Vehicle Type**	**Other**	**Line**	**Series**	**Body Style**	**Engine**	**Check Digit**	**Model Year**	**Assy. Plant**	**Sequence No.**

The following table interprets the VIN Plate position shown above.

Position	Interpretation	Codes = Description
1	Country of Origin	1 = Built in U.S by DaimlerChrysler Corporation
2	Assembler	J = Jeep
3	Vehicle Type	4 = Multipurpose Passenger Vehicle
4	GVWR & Pass. Safety	D = 0-1360 kg (1-3000 lbs) E = 1361-1814 kg (3001-4000 lbs) F = 1815-2267 kg (4001-5000 lbs) G = 2268-2721 kg (5001-6000 lbs) H = 2722-3175 kg (6001-7000 lbs) J = 3176-3628 kg (7001-8000 lbs) K = 3629-4082 kg (8001-9000 lbs) L = 4083-4535 kg (9001-10000 lbs) M = 4536-6350 kg (10001-14000 lbs)
5	Vehicle Line	X = Grand Cherokee 4x2 (LHD) W = Grand Cherokee 4x4 (LHD)
6	Series	6 = Overland 3 = Sport 4 = Laredo - High Line 5 = Limited - Premium
7	Body Style	8 = 4 Dr. Sport Utility
8	Engine	S = 4.0L 6 Cyl. Gas (ERH) N = 4.7L 8 Cyl.Gas (EVA)
9	Check Digit	0 = Check Digit 0 = Check Digit
10	Model Year	X = 1999 3 = 2003 4 = 2004 2 = 2002
11	Assembly Plant	C = Jefferson North Assembly
12 thru 17	Vehicle Build Sequence	Model Year Assembly Sequence

Group - 1

Component Parts for Mopar Accessories

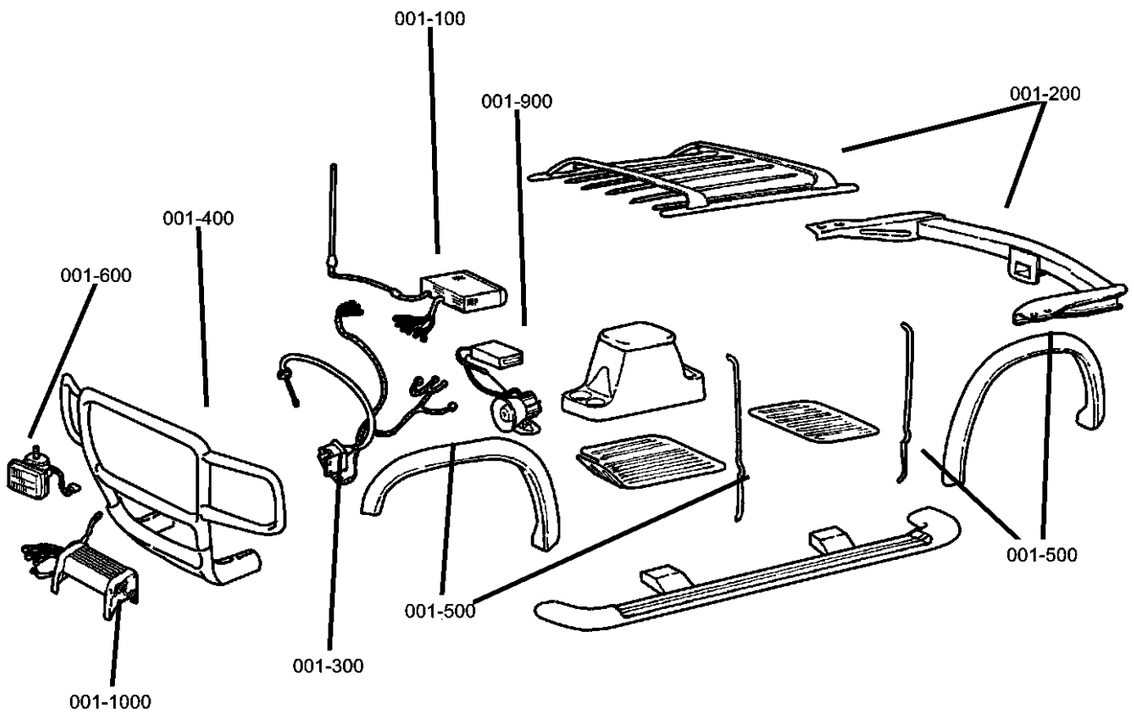

001-100 Audio & Electronics 	**001-200** Carriers & Cargo Hauling 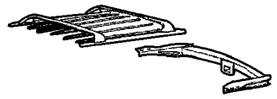	**001-300** Driving Convenience 	**001-500** Exterior Protection
001-600 Fog Lights & Electrical 	**001-800** Interior Storage 	**001-900** Security 	

Group - 1 Component Parts for Mopar Accessories

Illustration Title — Group-Fig. No.

Audio & Electronics
Player Kit ..... Fig. 1 - 115
Navigation Kit ..... Fig. 1 - 140

Carriers & Cargo Hauling
Bike Carrier - Hitch Mount ..... Fig. 1 - 210
Bike Carrier - Hitch Mount ..... Fig. 1 - 211
Bike Carrier - Roof ..... Fig. 1 - 212
Bike Carrier - Roof ..... Fig. 1 - 214
Carrier Kit - Canoe ..... Fig. 1 - 220
Carrier Kit - Water Sports ..... Fig. 1 - 222
Carrier Kit - Ski, Hitch Mount ..... Fig. 1 - 230
Carrier Kit - Ski (Four Pair) ..... Fig. 1 - 234
Carrier Kit - Ski (six Pair) ..... Fig. 1 - 236
Box Kit - Storage (Interior) ..... Fig. 1 - 260
Luggage Carrier - Roof Mount ..... Fig. 1 - 274
Adapter Kit - Ball Mount ..... Fig. 1 - 282

Driving Convenience
Mounting Kit - Cellular Phone ..... Fig. 1 - 310
Filter Kit - Cabin Air ..... Fig. 1 - 315

Exterior Protection
Shield Kit, Air Front ..... Fig. 1 - 510
Skid Plate Package - Front ..... Fig. 1 - 520
Skid Plate Package - Transfer Case ..... Fig. 1 - 522

Fog Lights & Electrical
Heater Kit ..... Fig. 1 - 610
Light Package - Fog ..... Fig. 1 - 615

Interior Storage
Console Package - Rear ..... Fig. 1 - 810
Guard Kit - Dog ..... Fig. 1 - 820

Security
Alarm - EVS Plus System ..... Fig. 1 - 914

Player Kit
Figure 1-115

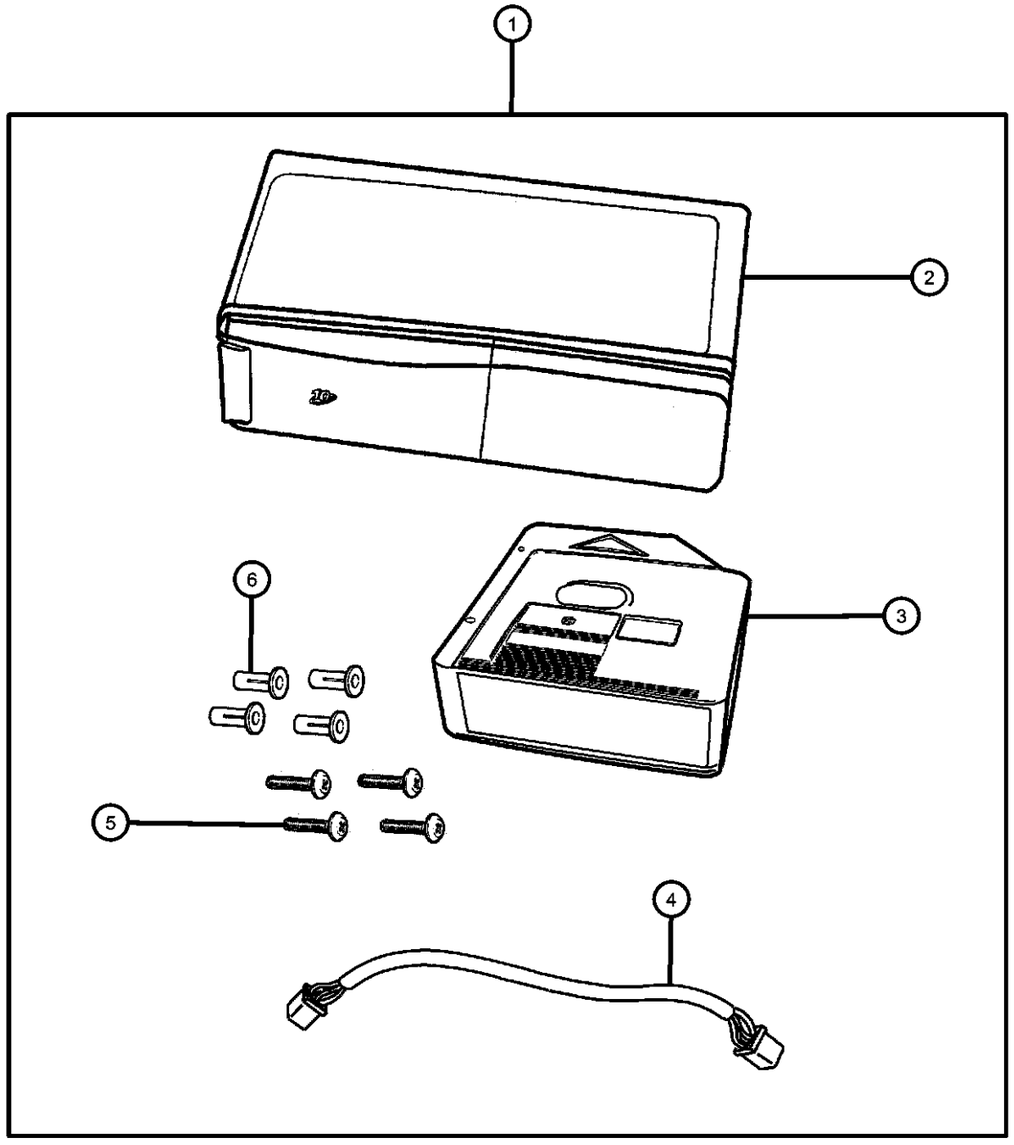

ITEM	PART NUMBER	QTY	LINE	SERIES	BODY	ENGINE	TRANS	TRIM	DESCRIPTION
1	82207521	1			74				PLAYER KIT, CD Changer - 10 Disc
2	56042129AC	1			74				CHANGER, CD
3	04858564	1			74				MAGAZINE, CD Changer
4	05080971AA	1			74				CABLE, CD Changer
5	06100047	4							NUT AND WASHER, Hex Nut-Coned Washer, M6 x 1.00
6	06505002AA	4							STUD

GRAND CHEROKEE (WJ)

SERIES	LINE	BODY	ENGINE	TRANSMISSION
H = Laredo M = Sport P = Limited S = Overland	T = JEEP - 2WD J = JEEP - 4WD U = JEEP - 4WD (RHD)	74 = SPORT UTILITY 4-DR	ERH = Engine - 4.0L Power Tech I-6 EVA = Engine- 4.7L V8 MPI EVC = Engine - 4.7L HO V8 MPI ER0 = All 4.0L 6 Cyl. Gas EV0 = All 4.7L Gas	DGK = 4 Speed Auto, 42RE DGQ = 5 Speed Auto, 45RFE DG0 = All Automatic Transmissions

Navigation Kit
Figure 1-140

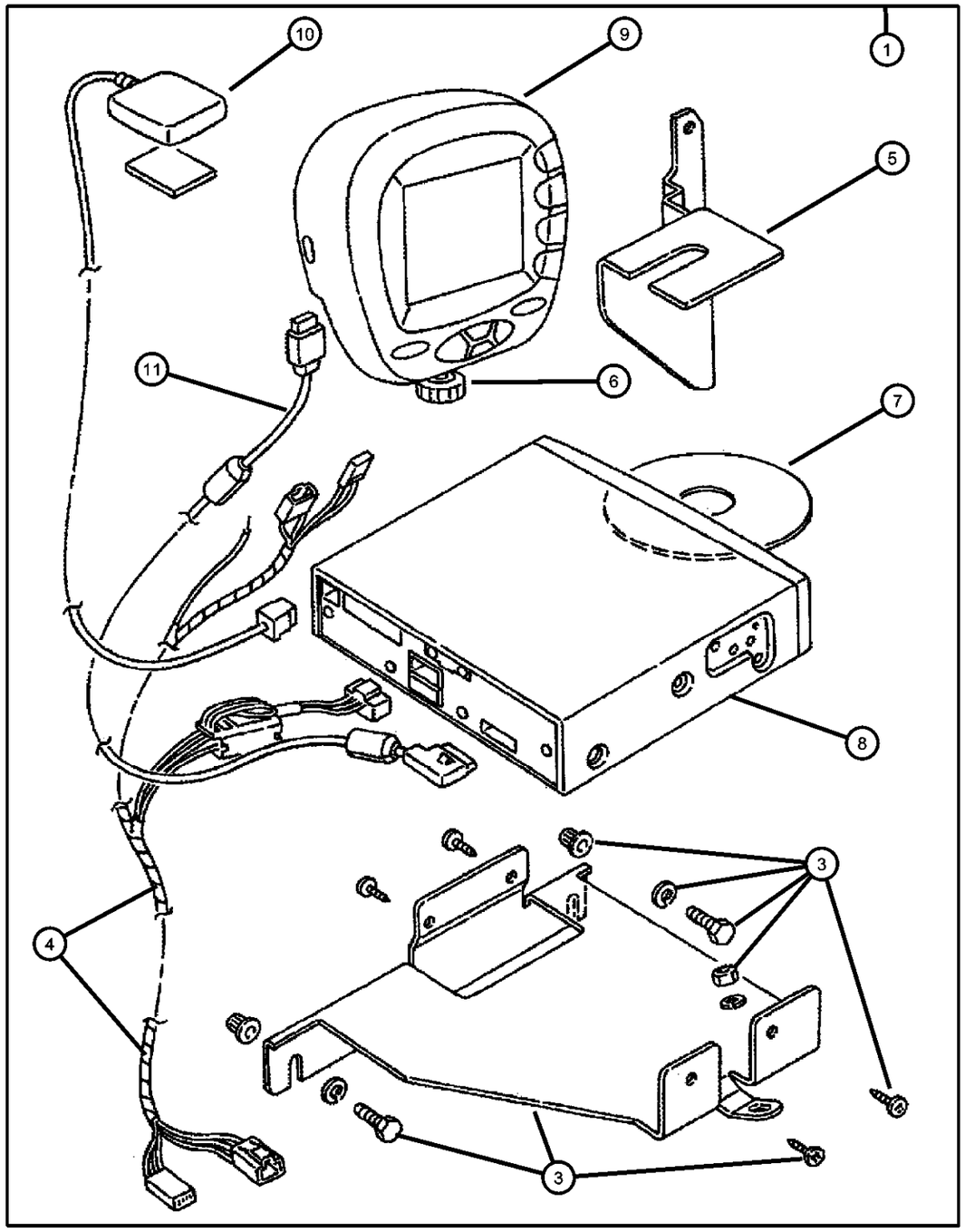

ITEM	PART NUMBER	QTY	LINE	SERIES	BODY	ENGINE	TRANS	TRIM	DESCRIPTION
NOTE: For warranty orders of items 8 and 9, use a Z prefix through function 11.									
1									NAVIGATION KIT, Vehicle
	82207573	1							Western U.S.
	82207574	1							Central U.S.
	82207575	1							Eastern U.S.
-2	82207572	1			74				INSTALL KIT, Vehicle Navigation System, Contains items 3 thru 6
3	82207572	1							BRACKET, Navigation Controller, Serviced in Install Kit, (NOT SERVICED)
4	82207572	1							WIRING, Navigation System, Serviced in Install Kit, (NOT SERVICED)
5	05017422AA	1			74				BRACKET, Navigation Display, Also Serviced in Install Kit
6	05019727AA	1			74				SCREW, Thumb, Also Serviced in Install Kit
7									COMPACT DISC, Navigation
	05017415AB	1	J, T		74				Western U.S.
	05017416AB	1	J, T		74				Central U.S.
	05017417AB	1	J, T		74				Eastern U.S.
8	05017419AB	1							CONTROLLER, Vehicle Navigation
9	05017418AA	1							MODULE, Navigation Display
10	05017420AA	1							ANTENNA, Global Positioning
11	05017433AA	1							WIRING, Navigation Display

GRAND CHEROKEE (WJ)

SERIES	LINE	BODY	ENGINE	TRANSMISSION
H = Laredo M = Sport P = Limited S = Overland	T = JEEP - 2WD J = JEEP - 4WD U = JEEP - 4WD (RHD)	74 = SPORT UTILITY 4-DR	ERH = Engine - 4.0L Power Tech I-6 EVA = Engine- 4.7L V8 MPI EVC = Engine - 4.7L HO V8 MPI ER0 = All 4.0L 6 Cyl. Gas EV0 = All 4.7L Gas	DGK = 4 Speed Auto, 42RE DGQ = 5 Speed Auto, 45RFE DG0 = All Automatic Transmissions

Bike Carrier - Hitch Mount
Figure 1-210

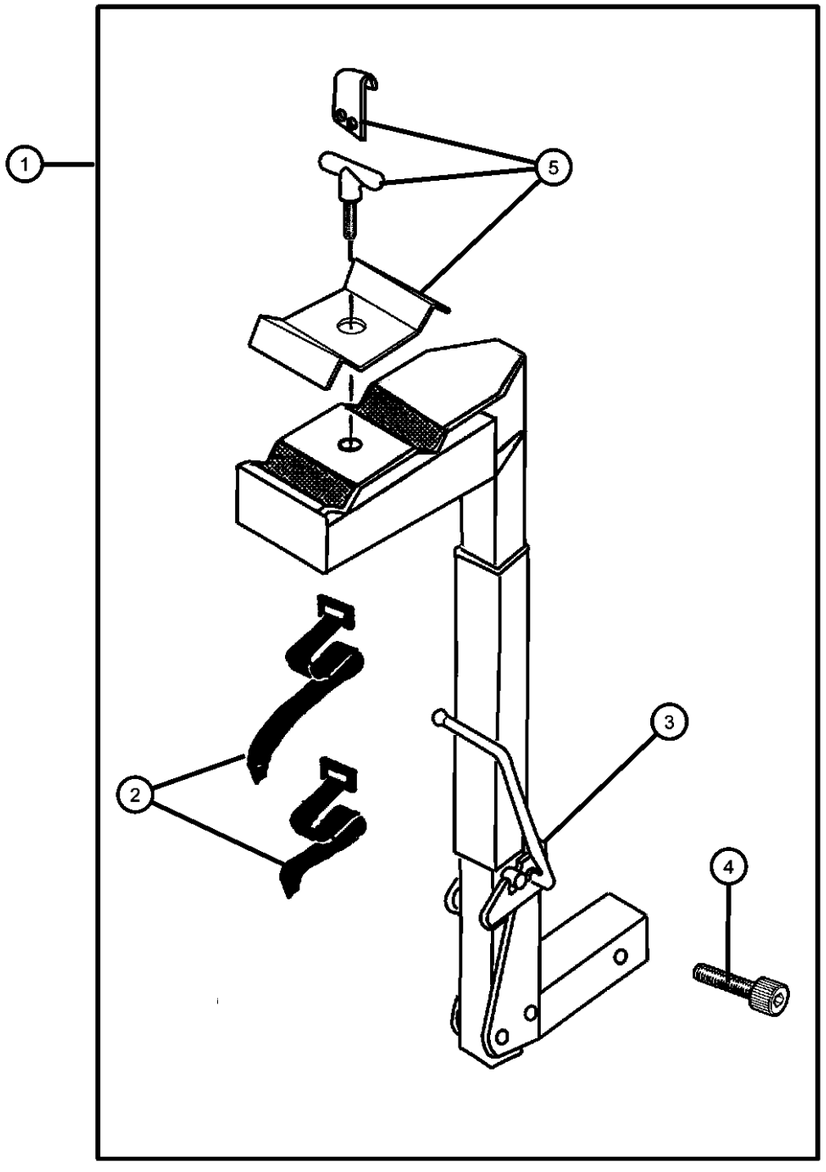

ITEM	PART NUMBER	QTY	LINE	SERIES	BODY	ENGINE	TRANS	TRIM	DESCRIPTION
NOTE: Folds down for access to rear hatch, has anti theft bolts.									
1	82204453	1	J, T		74				CARRIER KIT, Bike, 2.0 inch Receiver
2	04762880	1	J, T		74				STRAP KIT, Velcro, Contains: 1-Long and 1-Short Strap
3	05016775AA	1	J, T		74				STRAP KIT, Bike Carrier Latch, Contains: 2-Rubber Straps
4	05016776AA	1	J, T		74				BOLT KIT, Security, Contains: Bolt, Wrench, Washer and Nut
5	05018825AA	1	J, T		74				HARDWARE KIT, Bike Carrier, Contains: T-Handle, Lock Strap, Top Clamp and Washer

GRAND CHEROKEE (WJ)

SERIES	LINE	BODY	ENGINE	TRANSMISSION
H = Laredo M = Sport P = Limited S = Overland	T = JEEP - 2WD J = JEEP - 4WD U = JEEP - 4WD (RHD)	74 = SPORT UTILITY 4-DR	ERH = Engine - 4.0L Power Tech I-6 EVA = Engine- 4.7L V8 MPI EVC = Engine - 4.7L HO V8 MPI ER0 = All 4.0L 6 Cyl. Gas EV0 = All 4.7L Gas	DGK = 4 Speed Auto, 42RE DGQ = 5 Speed Auto, 45RFE DG0 = All Automatic Transmissions

Bike Carrier - Hitch Mount
Figure 1-211

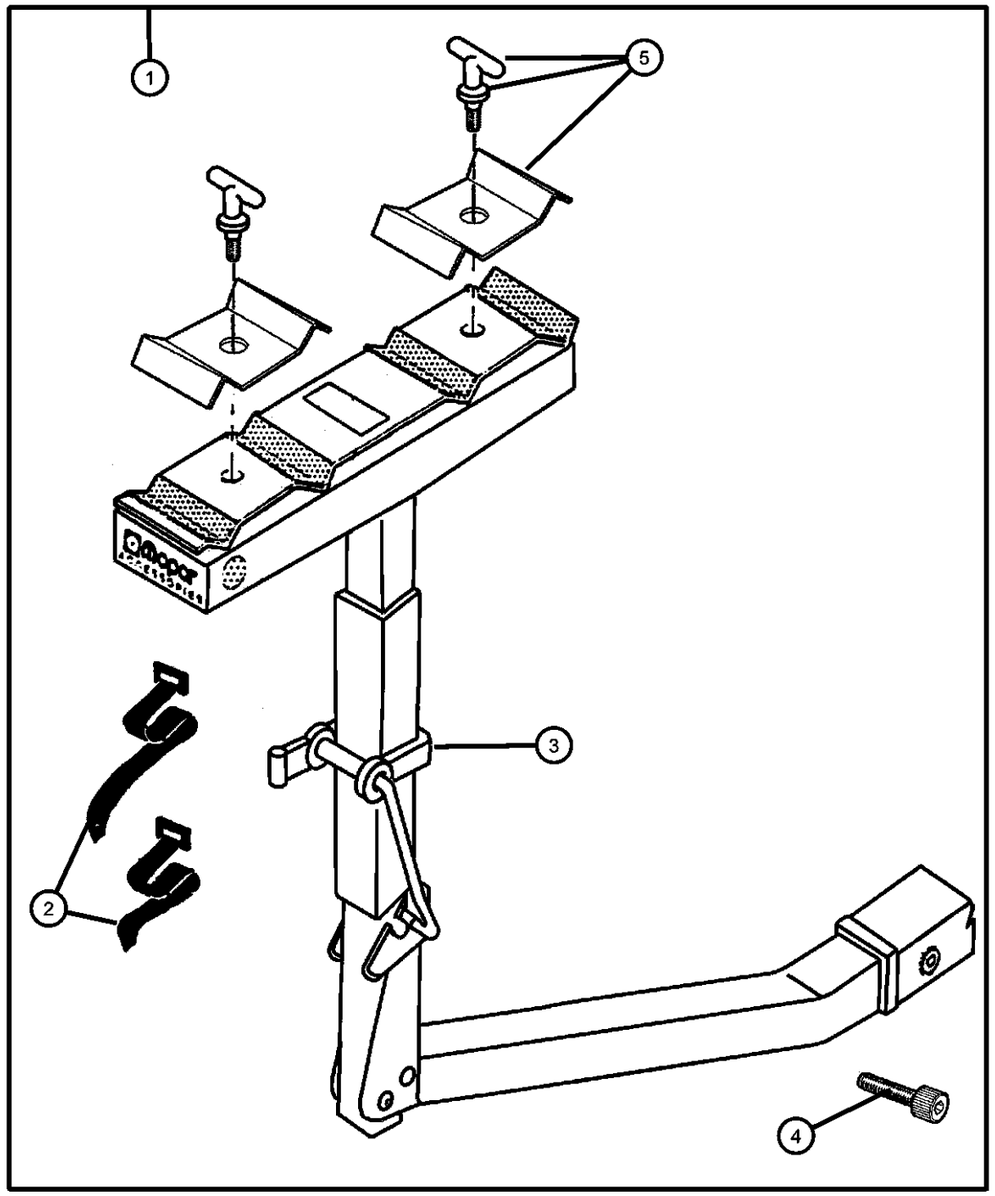

ITEM	PART NUMBER	QTY	LINE	SERIES	BODY	ENGINE	TRANS	TRIM	DESCRIPTION
1	82204328	1	J, T		74				CARRIER KIT, Bike, 2-Inch Receiver, Four Bike
2	04762880	1	J, T		74				STRAP KIT, Velcro, Contains: 1-Long and 1-Short Strap
3	05016775AA	1	J, T		74				STRAP KIT, Bike Carrier Latch, Contains: 2-Rubber Straps
4	05016776AA	1	J, T		74				BOLT KIT, Security, Contains: Bolt, Wrench, Washer and Nut
5	05018825AA	1	J, T		74				HARDWARE KIT, Bike Carrier, Contains: t-Handle, Lock Strap, Top Clamp and Washer

GRAND CHEROKEE (WJ)

SERIES	LINE	BODY	ENGINE	TRANSMISSION
H = Laredo M = Sport P = Limited S = Overland	T = JEEP - 2WD J = JEEP - 4WD U = JEEP - 4WD (RHD)	74 = SPORT UTILITY 4-DR	ERH = Engine - 4.0L Power Tech I-6 EVA = Engine- 4.7L V8 MPI EVC = Engine - 4.7L HO V8 MPI ER0 = All 4.0L 6 Cyl. Gas EV0 = All 4.7L Gas	DGK = 4 Speed Auto, 42RE DGQ = 5 Speed Auto, 45RFE DG0 = All Automatic Transmissions

Bike Carrier - Roof
Figure 1-212

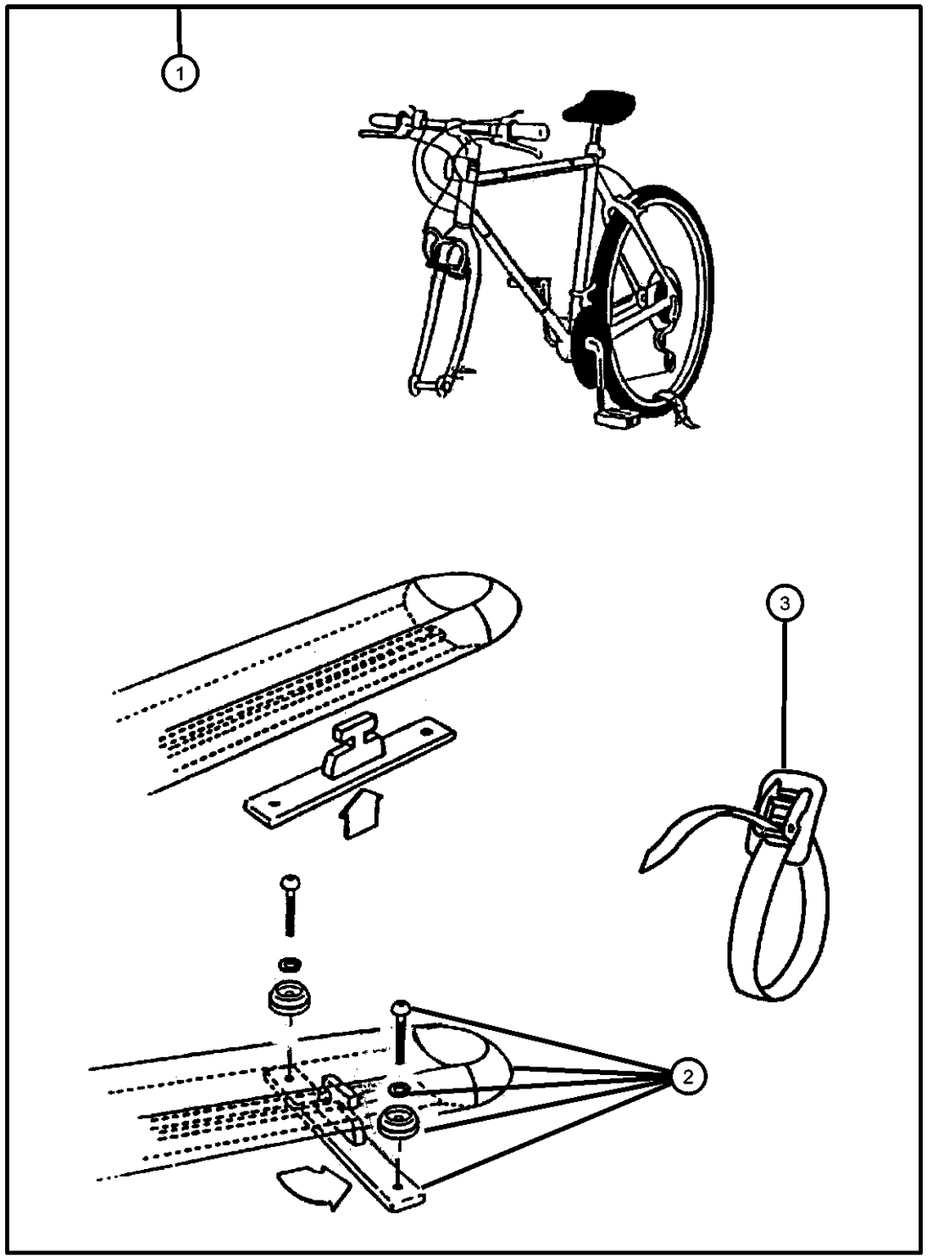

ITEM	PART NUMBER	QTY	LINE	SERIES	BODY	ENGINE	TRANS	TRIM	DESCRIPTION
NOTE: Hardware Kit also contained in Carrier Kit.									
1	82300585	1	J, T		74				CARRIER KIT, Bike
2	05093779AA	1	J, T		74				HARDWARE KIT, Accessory, Contains: T-Slot Anchors and Bar, Screws, Lockwashers and Dome Washers
3	05016513AA	1	J, T		74				STRAP, Cargo Tie Down, Contains: 2-Straps
-4	05066632AA	1	J, T		74				TOOL, Screw Driver

GRAND CHEROKEE (WJ)

SERIES	LINE	BODY	ENGINE	TRANSMISSION
H = Laredo M = Sport P = Limited S = Overland	T = JEEP - 2WD J = JEEP - 4WD U = JEEP - 4WD (RHD)	74 = SPORT UTILITY 4-DR	ERH = Engine - 4.0L Power Tech I-6 EVA = Engine- 4.7L V8 MPI EVC = Engine - 4.7L HO V8 MPI ER0 = All 4.0L 6 Cyl. Gas EV0 = All 4.7L Gas	DGK = 4 Speed Auto, 42RE DGQ = 5 Speed Auto, 45RFE DG0 = All Automatic Transmissions

Bike Carrier - Roof
Figure 1-214

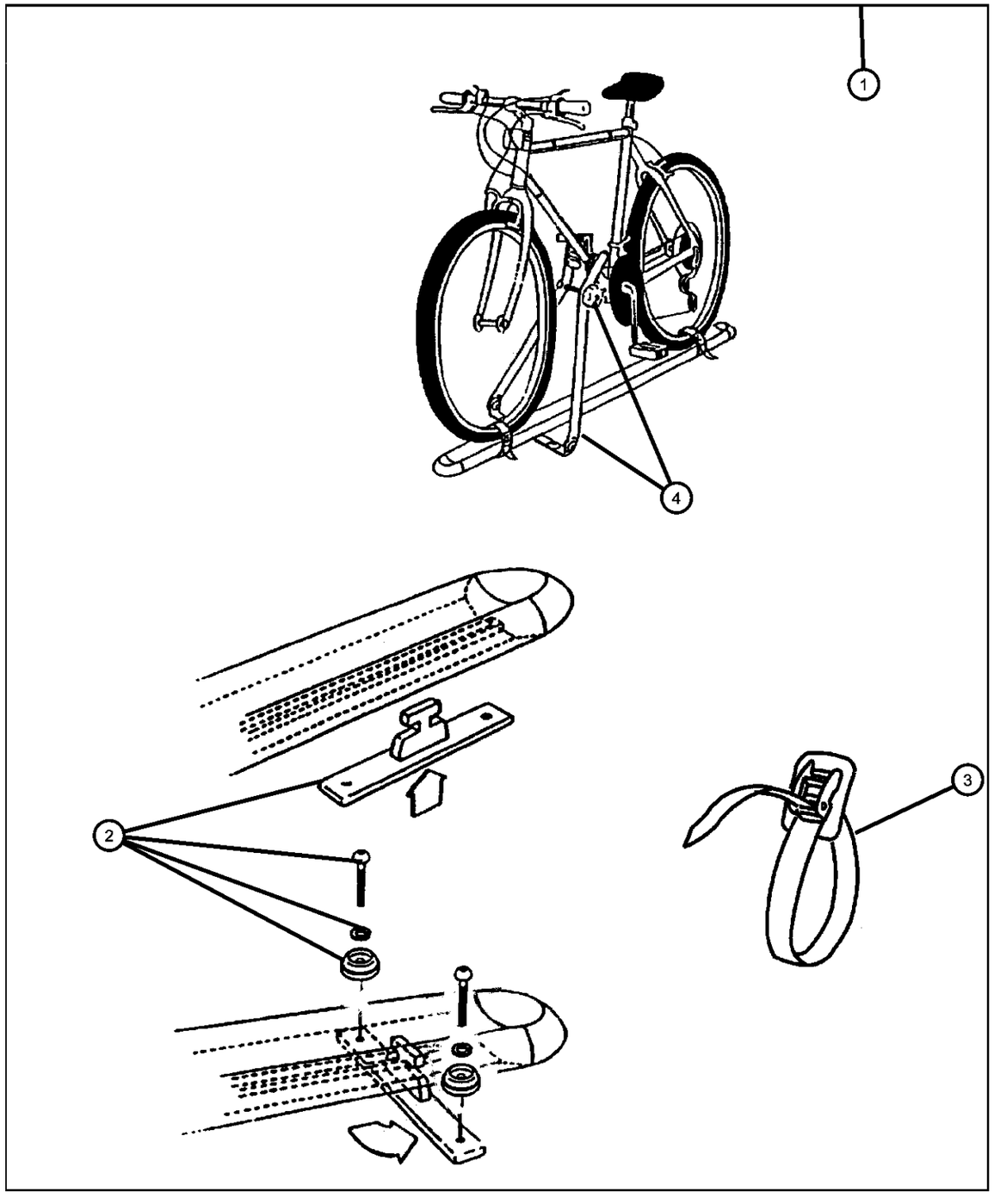

ITEM	PART NUMBER	QTY	LINE	SERIES	BODY	ENGINE	TRANS	TRIM	DESCRIPTION
NOTE: Kit has Upright Clamp for Bike									
1	82203471	1	J, T		74				CARRIER KIT, Bike
2	05093779AA	1	J, T		74				HARDWARE KIT, Accessory, Contains: T-Slot Anchors and Bar, Screws, Lockwashers and Dome Washers
3	05016513AA	1	J, T		74				STRAP, Cargo Tie Down, Contains: 2-Straps
4	05018194AA	1	J, T		74				HARDWARE KIT, Bike Carrier
-5	05066632AA	1	J, T		74				TOOL, Screw Driver

GRAND CHEROKEE (WJ)

SERIES	LINE	BODY	ENGINE	TRANSMISSION
H = Laredo M = Sport P = Limited S = Overland	T = JEEP - 2WD J = JEEP - 4WD U = JEEP - 4WD (RHD)	74 = SPORT UTILITY 4-DR	ERH = Engine - 4.0L Power Tech I-6 EVA = Engine- 4.7L V8 MPI EVC = Engine - 4.7L HO V8 MPI ER0 = All 4.0L 6 Cyl. Gas EV0 = All 4.7L Gas	DGK = 4 Speed Auto, 42RE DGQ = 5 Speed Auto, 45RFE DG0 = All Automatic Transmissions

Carrier Kit - Canoe
Figure 1-220

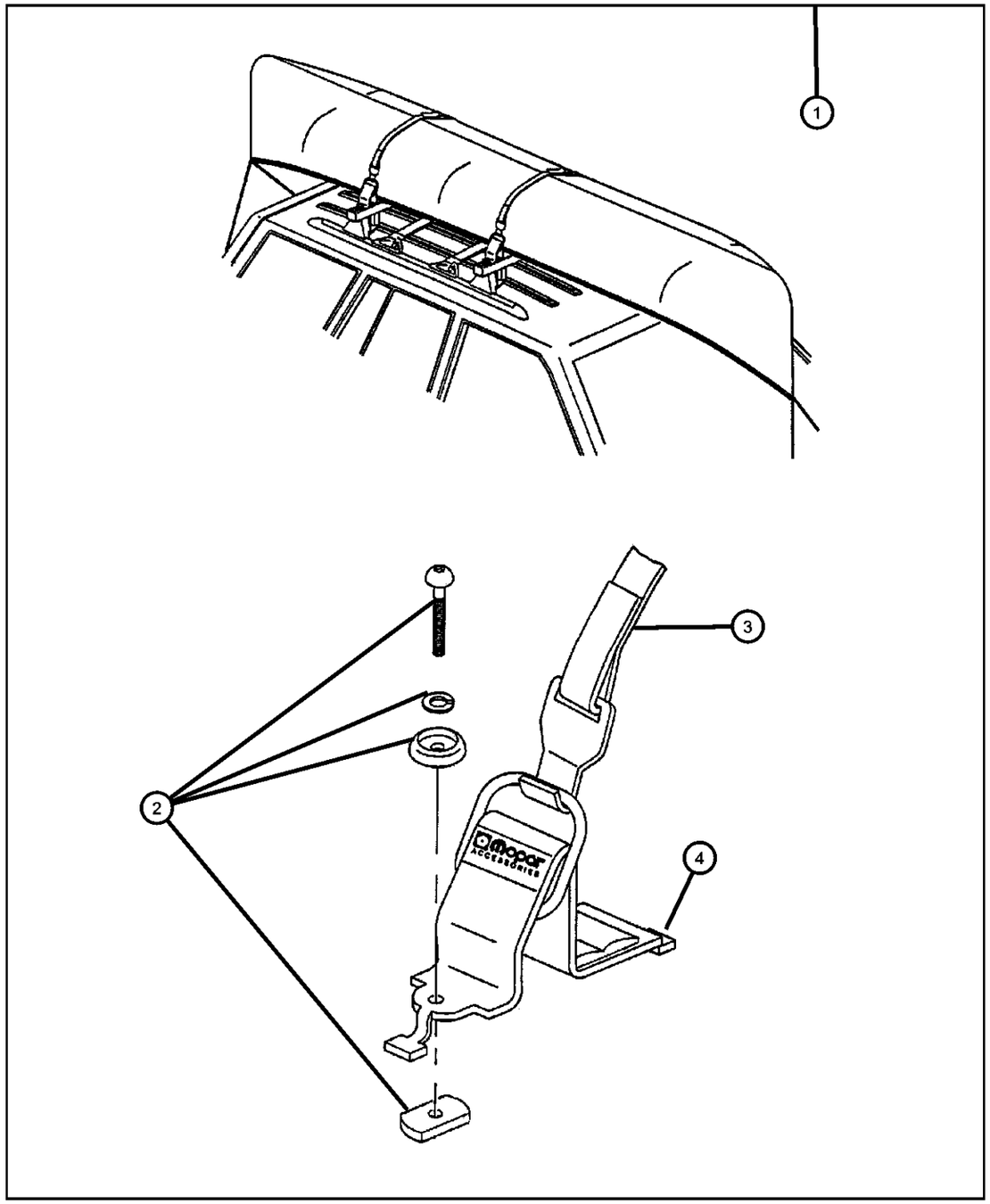

ITEM	PART NUMBER	QTY	LINE	SERIES	BODY	ENGINE	TRANS	TRIM	DESCRIPTION
NOTE: Use only with Sport Utility Bar									
NOTE: Hardware Kit also contained in Carrier Kit									
1	82204700	1	J, T		74				CARRIER KIT, Canoe
2	05016389AA	1	J, T		74				HARDWARE KIT, Accessory
3	05016511AA	1	J, T		74				STRAP, Cargo Tie Down
4	05016510AA	1	J, T		74				BRACKET, Cargo Tie Down

GRAND CHEROKEE (WJ)

SERIES	LINE	BODY	ENGINE	TRANSMISSION
H = Laredo M = Sport P = Limited S = Overland	T = JEEP - 2WD J = JEEP - 4WD U = JEEP - 4WD (RHD)	74 = SPORT UTILITY 4-DR	ERH = Engine - 4.0L Power Tech I-6 EVA = Engine- 4.7L V8 MPI EVC = Engine - 4.7L HO V8 MPI ER0 = All 4.0L 6 Cyl. Gas EV0 = All 4.7L Gas	DGK = 4 Speed Auto, 42RE DGQ = 5 Speed Auto, 45RFE DG0 = All Automatic Transmissions

Carrier Kit - Water Sports
Figure 1-222

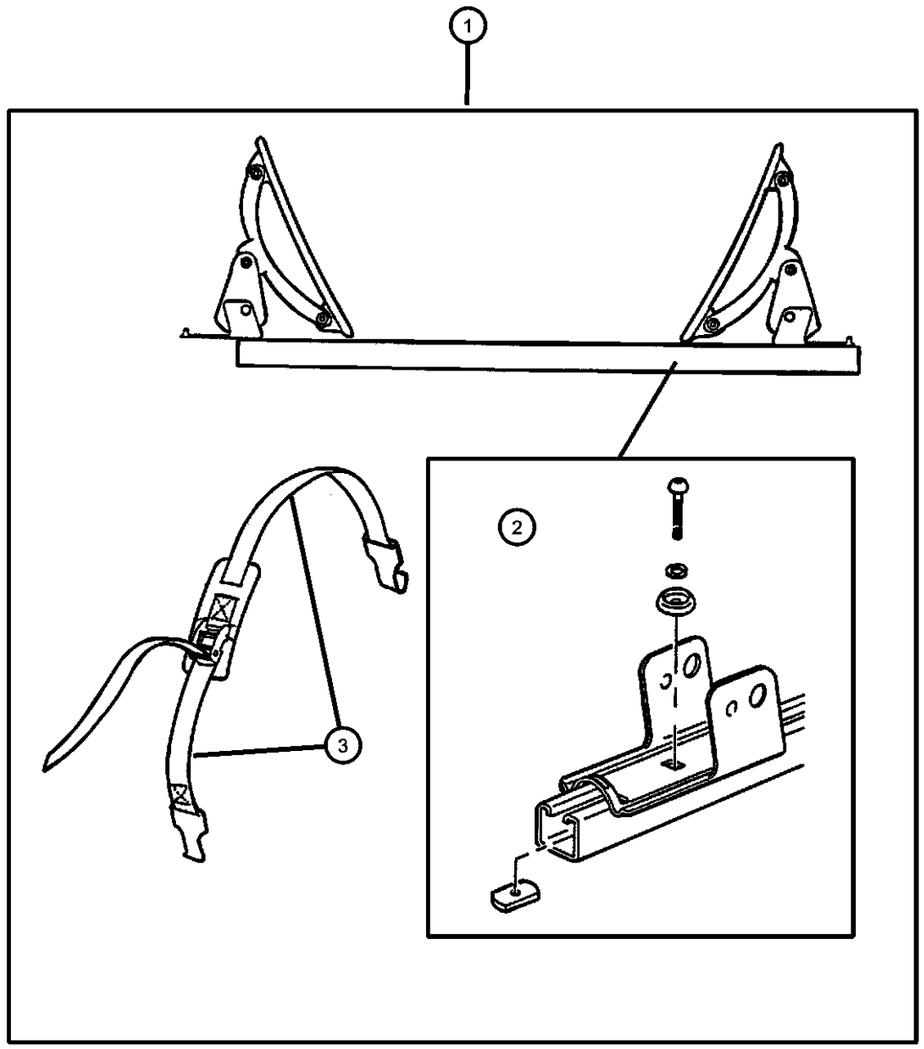

ITEM	PART NUMBER	QTY	LINE	SERIES	BODY	ENGINE	TRANS	TRIM	DESCRIPTION
1	82205416	1	J, U		74				CARRIER KIT, Water Sports
2	05016389AA	1	J, U		74				HARDWARE KIT, Accessory, Consists of: 4-25MM Button Head Screws, 4-30MM Button Head Screws, 4-Lock Washers,4-Dome Washers, 4-Rubber Washers and 4-T-Nuts
3	05016511AA	1	J, U		74				STRAP, Cargo Tie Down

GRAND CHEROKEE (WJ)

SERIES	LINE	BODY	ENGINE	TRANSMISSION
H = Laredo	T = JEEP - 2WD	74 = SPORT UTILITY 4-DR	ERH = Engine - 4.0L Power Tech I-6	DGK = 4 Speed Auto, 42RE
M = Sport	J = JEEP - 4WD		EVA = Engine- 4.7L V8 MPI	DGQ = 5 Speed Auto, 45RFE
P = Limited	U = JEEP - 4WD (RHD)		EVC = Engine - 4.7L HO V8 MPI	DG0 = All Automatic Transmissions
S = Overland			ER0 = All 4.0L 6 Cyl. Gas	
			EV0 = All 4.7L Gas	

Carrier Kit - Ski, Hitch Mount
Figure 1-230

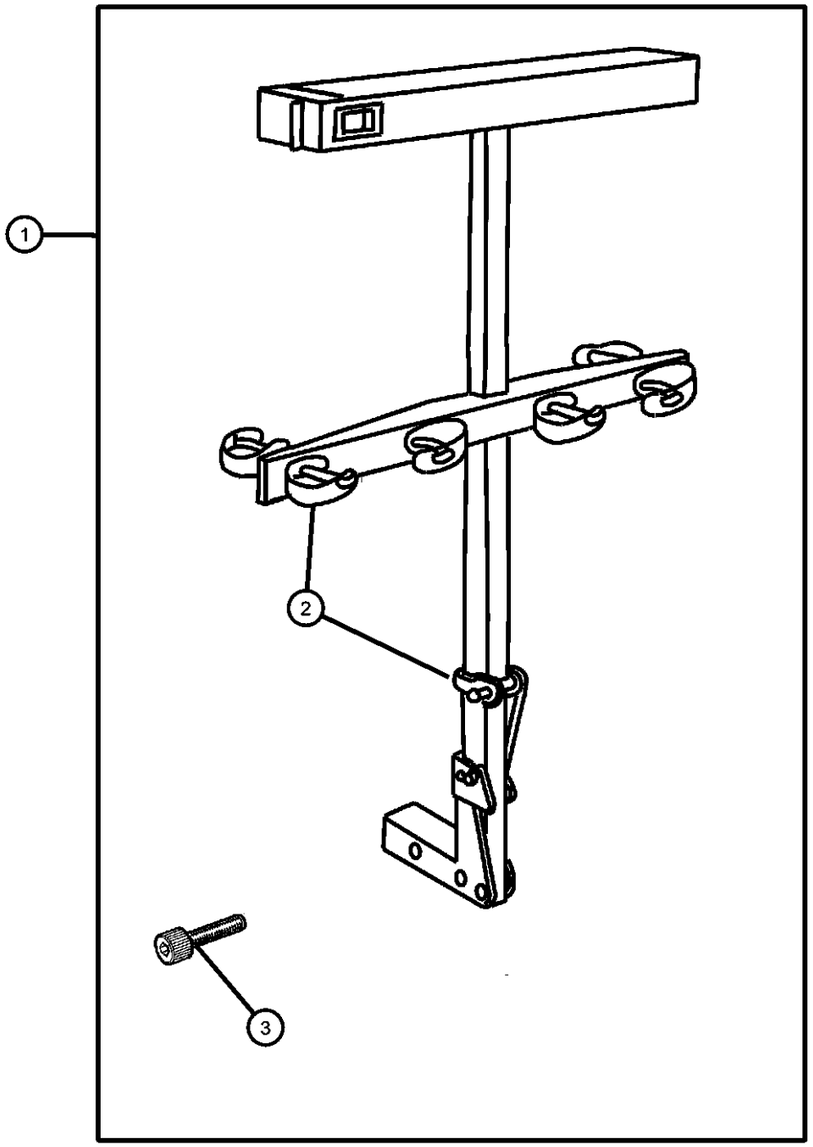

ITEM	PART NUMBER	QTY	LINE	SERIES	BODY	ENGINE	TRANS	TRIM	DESCRIPTION
1	82204455	1	J, T		74				CARRIER KIT, Ski - 4 Pair
2	05016775AA	1	J, T		74				STRAP KIT, Bike Carrier Latch, Contains: 2-Rubber Straps
3	05016776AA	1	J, T		74				BOLT KIT, Security, Contains: Bolt, Wrench, Washer and Nut

GRAND CHEROKEE (WJ)

SERIES	LINE	BODY	ENGINE	TRANSMISSION
H = Laredo M = Sport P = Limited S = Overland	T = JEEP - 2WD J = JEEP - 4WD U = JEEP - 4WD (RHD)	74 = SPORT UTILITY 4-DR	ERH = Engine - 4.0L Power Tech I-6 EVA = Engine- 4.7L V8 MPI EVC = Engine - 4.7L HO V8 MPI ER0 = All 4.0L 6 Cyl. Gas EV0 = All 4.7L Gas	DGK = 4 Speed Auto, 42RE DGQ = 5 Speed Auto, 45RFE DG0 = All Automatic Transmissions

Carrier Kit - Ski (Four Pair)
Figure 1-234

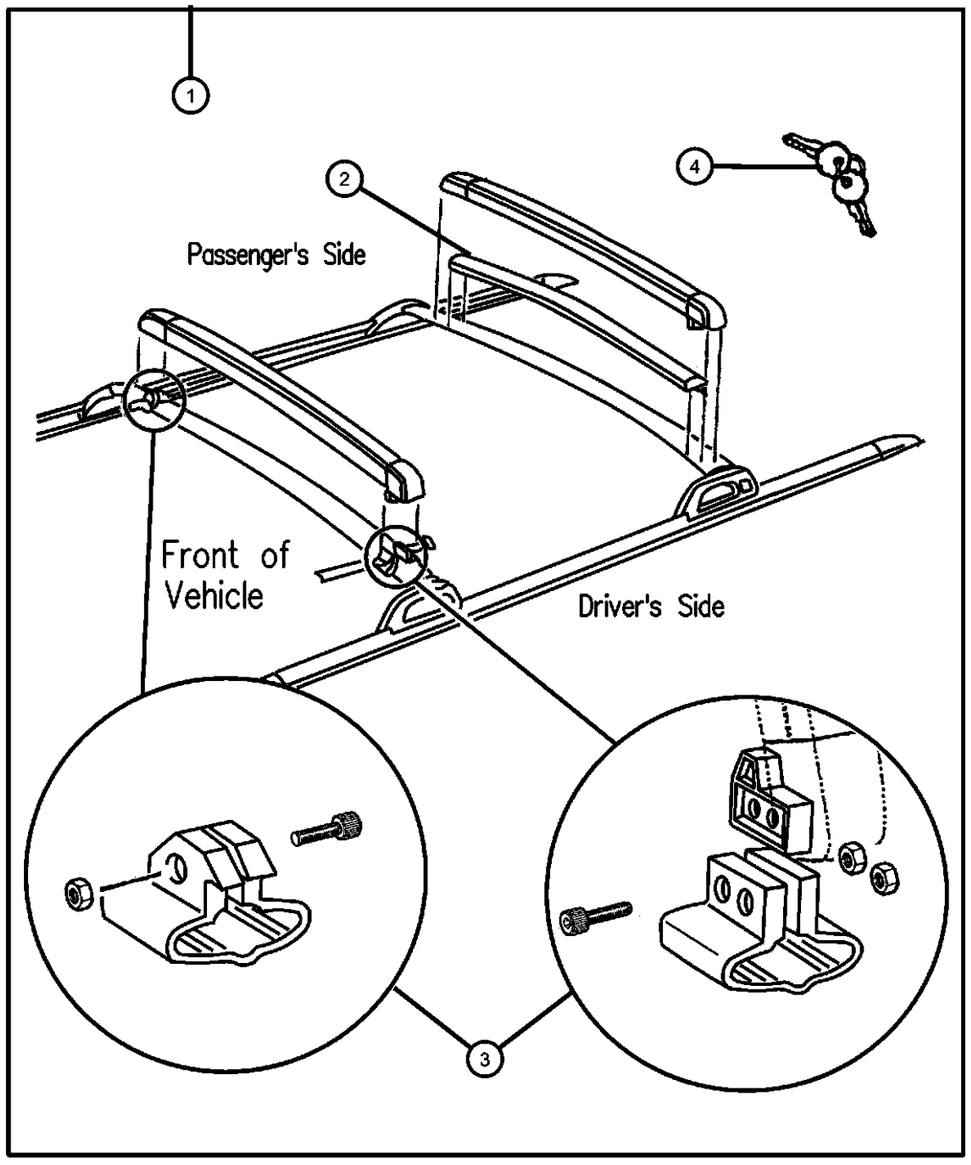

ITEM	PART NUMBER	QTY	LINE	SERIES	BODY	ENGINE	TRANS	TRIM	DESCRIPTION
1	82204101	1	J, T		74				CARRIER KIT, Ski - 4 Pair
2	04797617	1	J, T		74				PAD, Crossbar, Comes in 36 Inches, Cut to Size.
3	04797618	1	J, T		74				HARDWARE KIT, Accessory
4	04796058	1	J, T		74				LOCK KIT, Carrier, Consists of: 2-Lock Assy, with Keys and 2-Clips

GRAND CHEROKEE (WJ)

SERIES	LINE	BODY	ENGINE	TRANSMISSION
H = Laredo M = Sport P = Limited S = Overland	T = JEEP - 2WD J = JEEP - 4WD U = JEEP - 4WD (RHD)	74 = SPORT UTILITY 4-DR	ERH = Engine - 4.0L Power Tech I-6 EVA = Engine- 4.7L V8 MPI EVC = Engine - 4.7L HO V8 MPI ER0 = All 4.0L 6 Cyl. Gas EV0 = All 4.7L Gas	DGK = 4 Speed Auto, 42RE DGQ = 5 Speed Auto, 45RFE DG0 = All Automatic Transmissions

Carrier Kit - Ski (six Pair)
Figure 1-236

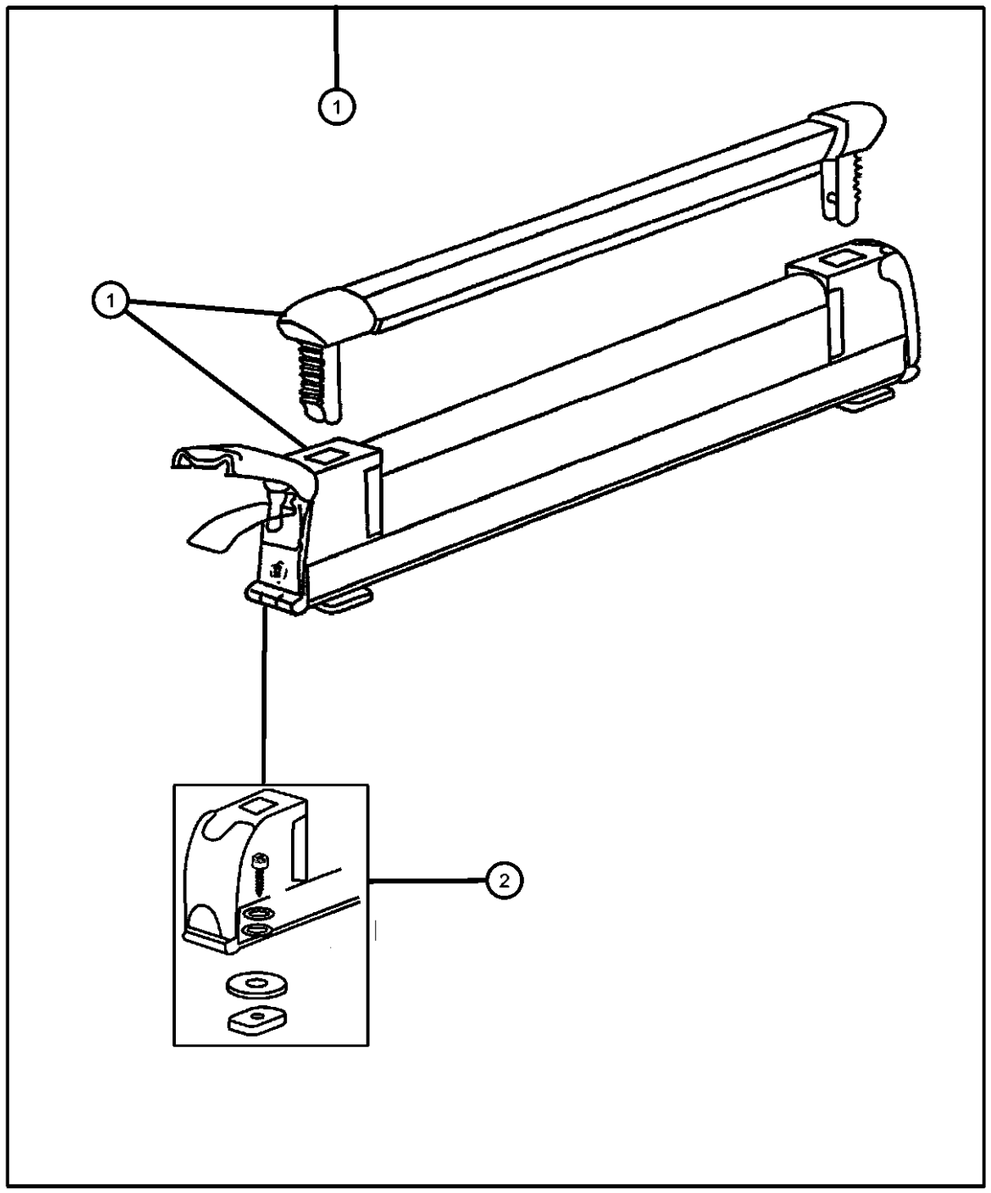

ITEM	PART NUMBER	QTY	LINE	SERIES	BODY	ENGINE	TRANS	TRIM	DESCRIPTION
1	82207308	1							CARRIER KIT, Ski
2	05086158AA	1							HARDWARE KIT, Accessory, Contains: 4 - 25MM Screws, 4 - 20M Screws, 4 - 16MM Screws, 4 - Lock Washers, 4 - Flat Washers, 4 - T Plates, 4 - Rubber Washers

GRAND CHEROKEE (WJ)

SERIES	LINE	BODY	ENGINE	TRANSMISSION
H = Laredo M = Sport P = Limited S = Overland	T = JEEP - 2WD J = JEEP - 4WD U = JEEP - 4WD (RHD)	74 = SPORT UTILITY 4-DR	ERH = Engine - 4.0L Power Tech I-6 EVA = Engine- 4.7L V8 MPI EVC = Engine - 4.7L HO V8 MPI ER0 = All 4.0L 6 Cyl. Gas EV0 = All 4.7L Gas	DGK = 4 Speed Auto, 42RE DGQ = 5 Speed Auto, 45RFE DG0 = All Automatic Transmissions

Box Kit - Storage (Interior)
Figure 1-260

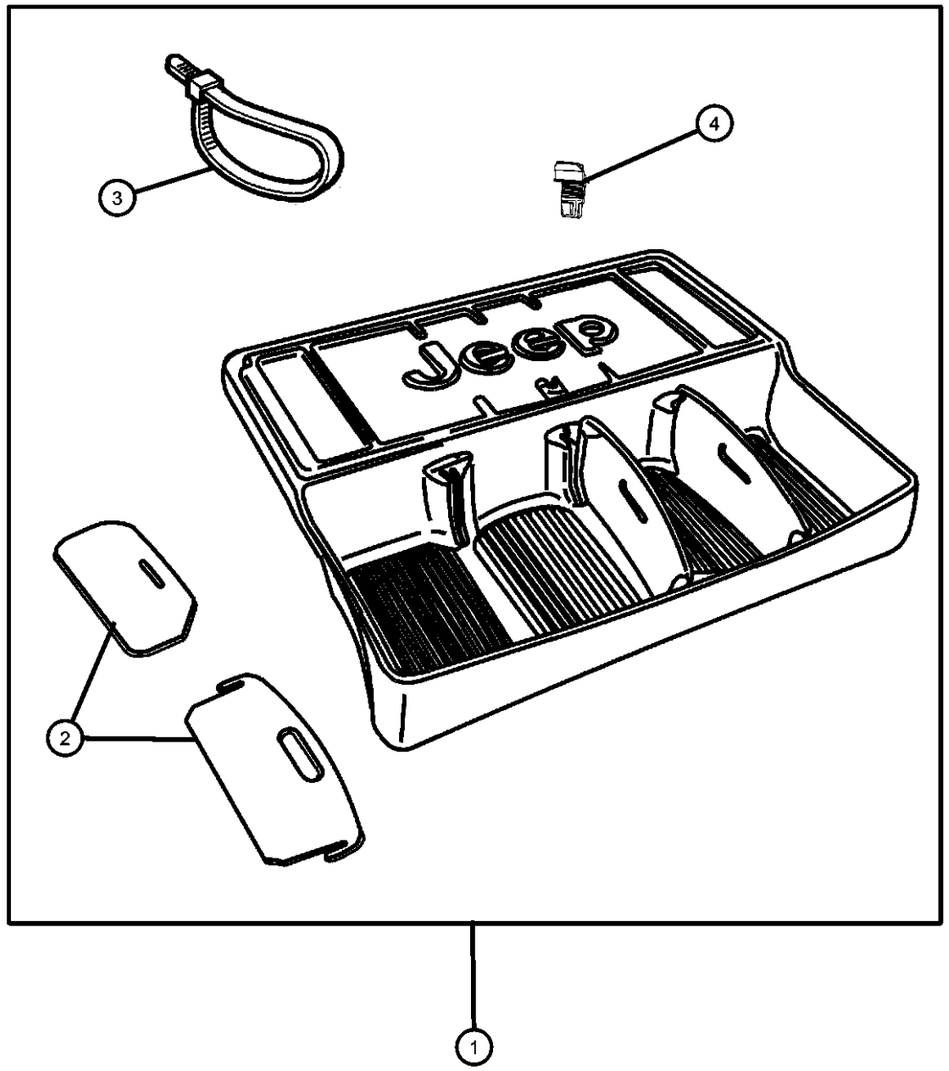

ITEM	PART NUMBER	QTY	LINE	SERIES	BODY	ENGINE	TRANS	TRIM	DESCRIPTION
NOTE: Mounts Behind Rear Seat. Box is approximately 45' W/18'D/8'H. The tray is located between the box & liftgate - Molded unit has lockable a									
1	82205010	1	J, T		74				BOX KIT, Storage-Interior
2	05016544AA	1	J, T		74				DIVIDER KIT, Cargo
3	05016545AA	1	J, T		74				STRAP, Cargo Tie Down
4	05016546AA	1	J, T		74				LOCK KIT, Storage

GRAND CHEROKEE (WJ)

SERIES	LINE	BODY	ENGINE	TRANSMISSION
H = Laredo M = Sport P = Limited S = Overland	T = JEEP - 2WD J = JEEP - 4WD U = JEEP - 4WD (RHD)	74 = SPORT UTILITY 4-DR	ERH = Engine - 4.0L Power Tech I-6 EVA = Engine- 4.7L V8 MPI EVC = Engine - 4.7L HO V8 MPI ER0 = All 4.0L 6 Cyl. Gas EV0 = All 4.7L Gas	DGK = 4 Speed Auto, 42RE DGQ = 5 Speed Auto, 45RFE DG0 = All Automatic Transmissions

Luggage Carrier - Roof Mount
Figure 1-274

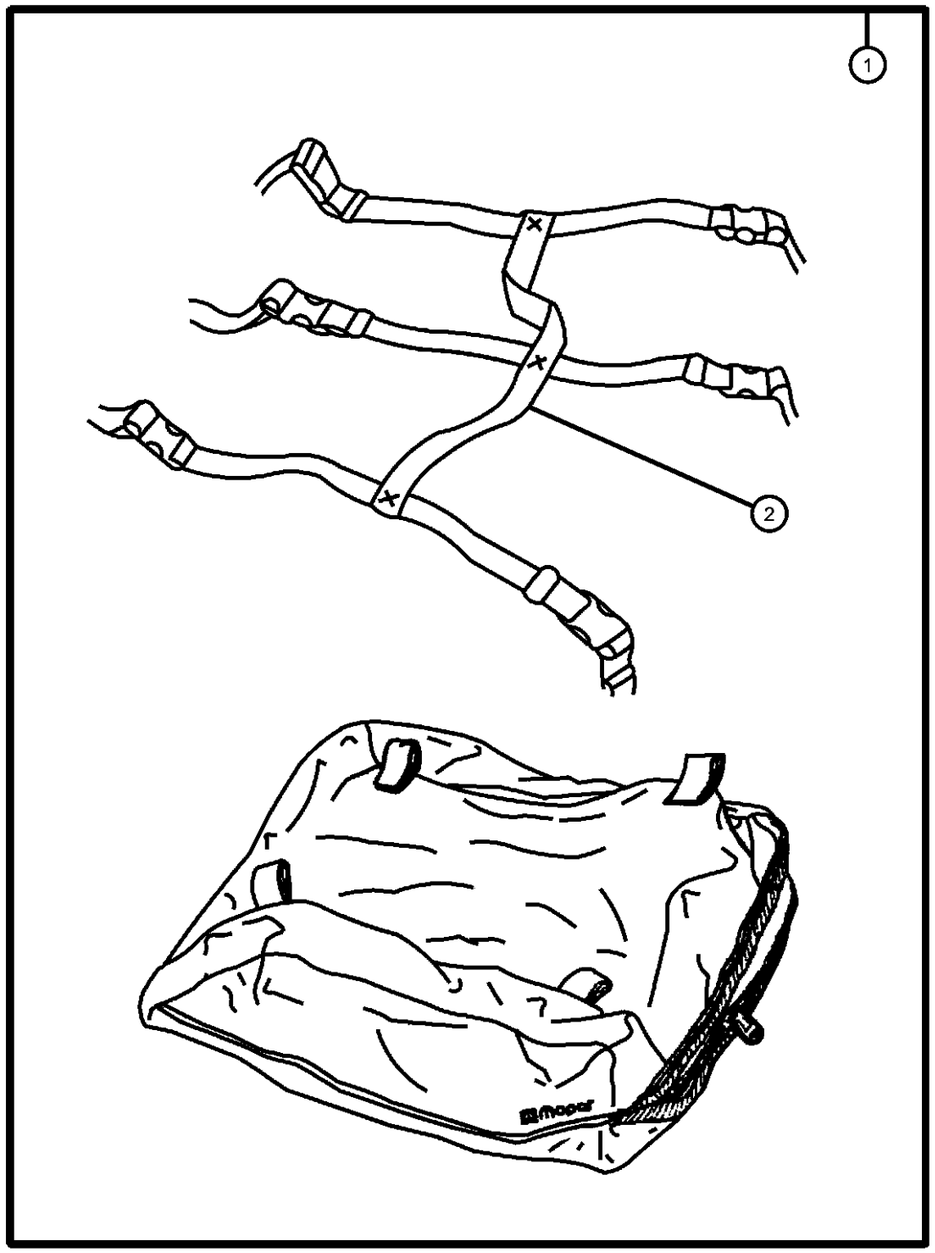

ITEM	PART NUMBER	QTY	LINE	SERIES	BODY	ENGINE	TRANS	TRIM	DESCRIPTION
NOTE: Requires Roof Rack.									
1	82207198	1							CARRIER KIT, Luggage
2	05066332AA	1							STRAP KIT, Luggage Carrier, Consists of: 6- Tie Straps, 6- Locking Buckles, 6- Quick Release Connectors and 6- Elastic Loops

GRAND CHEROKEE (WJ)

SERIES	LINE	BODY	ENGINE	TRANSMISSION
H = Laredo M = Sport P = Limited S = Overland	T = JEEP - 2WD J = JEEP - 4WD U = JEEP - 4WD (RHD)	74 = SPORT UTILITY 4-DR	ERH = Engine - 4.0L Power Tech I-6 EVA = Engine- 4.7L V8 MPI EVC = Engine - 4.7L HO V8 MPI ER0 = All 4.0L 6 Cyl. Gas EV0 = All 4.7L Gas	DGK = 4 Speed Auto, 42RE DGQ = 5 Speed Auto, 45RFE DG0 = All Automatic Transmissions

Adapter Kit - Ball Mount
Figure 1-282

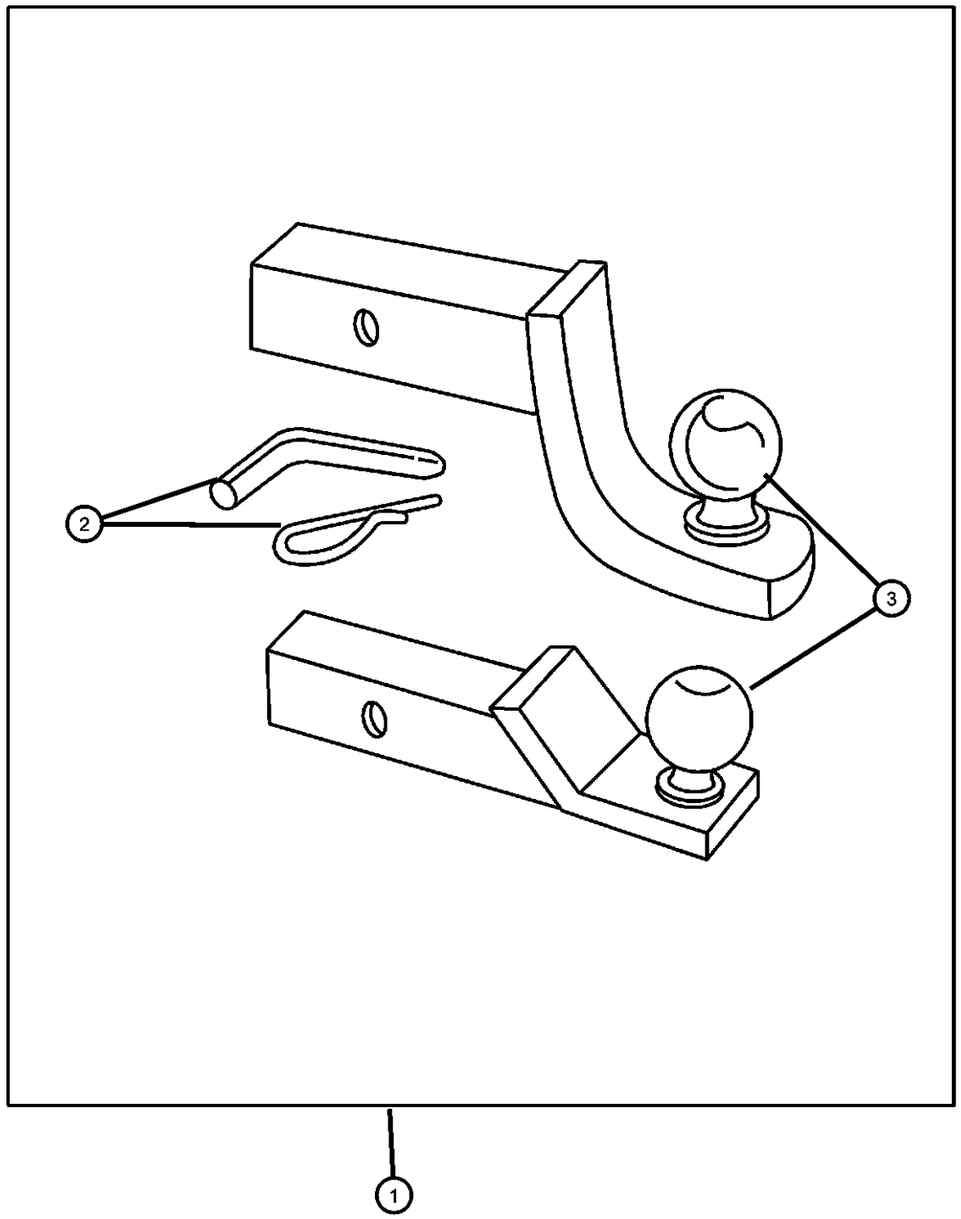

ITEM	PART NUMBER	QTY	LINE	SERIES	BODY	ENGINE	TRANS	TRIM	DESCRIPTION
1									ADAPTER KIT, Ball Mount
	82200248	1	J, T		74				3/4 inch Shank
	82201148	1	J, T		74				1 inch Shank,1.75 Rise, 1.00 Drop
	82201149	1	J, T		74				1 inch Shank,3.00 Rise,2.25 Drop
2	05016666AA	1	J, T		74				PIN, Hitch
3									BALL KIT, Trailer Tow
	82401197	1	J, T		74				1-7/8 inch Ball, 2000 #
	82401218	1	J, T		74				1-5/16 inch Ball, 2000 #

GRAND CHEROKEE (WJ)

SERIES	LINE	BODY	ENGINE	TRANSMISSION
H = Laredo	T = JEEP - 2WD	74 = SPORT UTILITY 4-DR	ERH = Engine - 4.0L Power Tech I-6	DGK = 4 Speed Auto, 42RE
M = Sport	J = JEEP - 4WD		EVA = Engine- 4.7L V8 MPI	DGQ = 5 Speed Auto, 45RFE
P = Limited	U = JEEP - 4WD (RHD)		EVC = Engine - 4.7L HO V8 MPI	DG0 = All Automatic Transmissions
S = Overland			ER0 = All 4.0L 6 Cyl. Gas	
			EV0 = All 4.7L Gas	

Mounting Kit - Cellular Phone
Figure 1-310

ITEM	PART NUMBER	QTY	LINE	SERIES	BODY	ENGINE	TRANS	TRIM	DESCRIPTION

NOTE; Smart Holder and Bracket Assy. with Jeep Logo, Bracket to be black powder coated low gloss.
NOTE: Holds any wireless handset. Installs to instrument panel.

1	82204332	1	MOUNTING KIT, Cellular Phone
2	05018103AA	1	HARDWARE KIT, Accessory, Contains: Set of long and short feet
3	05016536AA	1	CORD, Cellular Phone, 18 Inch length

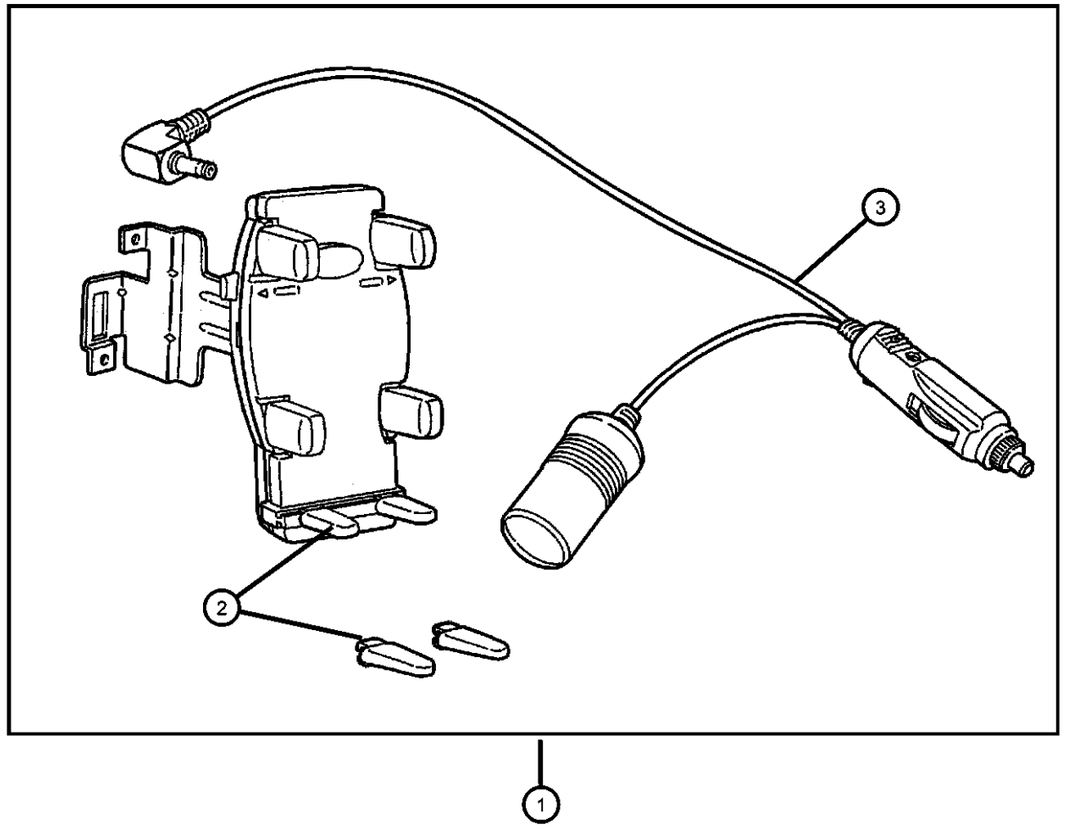

GRAND CHEROKEE (WJ)

SERIES	LINE	BODY	ENGINE	TRANSMISSION
H = Laredo M = Sport P = Limited S = Overland	T = JEEP - 2WD J = JEEP - 4WD U = JEEP - 4WD (RHD)	74 = SPORT UTILITY 4-DR	ERH = Engine - 4.0L Power Tech I-6 EVA = Engine- 4.7L V8 MPI EVC = Engine - 4.7L HO V8 MPI ER0 = All 4.0L 6 Cyl. Gas EV0 = All 4.7L Gas	DGK = 4 Speed Auto, 42RE DGQ = 5 Speed Auto, 45RFE DG0 = All Automatic Transmissions

Filter Kit - Cabin Air
Figure 1-315

ITEM	PART NUMBER	QTY	LINE	SERIES	BODY	ENGINE	TRANS	TRIM	DESCRIPTION
NOTE:Triple layer filters install in the fresh air intake within the plenum area. Reduces pollen, mold & other allergens.									
NOTE: Heating, ventilating & air conditioning continue to function as designed. Recommended service 2yrs/24,000 miles.									
1	82204691	1	J, T		74				FILTER KIT, Cabin Air
2	05013595AA	1	J, T		74				FILTER, Air

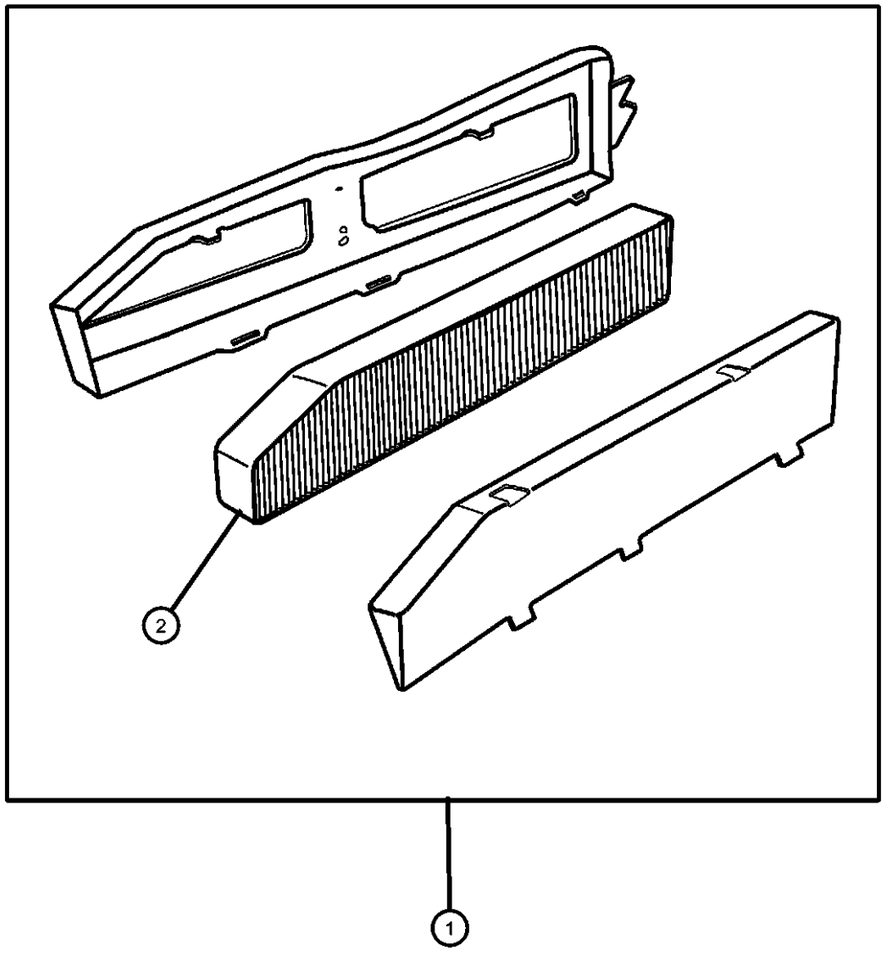

GRAND CHEROKEE (WJ)

SERIES	LINE	BODY	ENGINE	TRANSMISSION
H = Laredo M = Sport P = Limited S = Overland	T = JEEP - 2WD J = JEEP - 4WD U = JEEP - 4WD (RHD)	74 = SPORT UTILITY 4-DR	ERH = Engine - 4.0L Power Tech I-6 EVA = Engine- 4.7L V8 MPI EVC = Engine - 4.7L HO V8 MPI ER0 = All 4.0L 6 Cyl. Gas EV0 = All 4.7L Gas	DGK = 4 Speed Auto, 42RE DGQ = 5 Speed Auto, 45RFE DG0 = All Automatic Transmissions

Shield Kit, Air Front
Figure 1-510

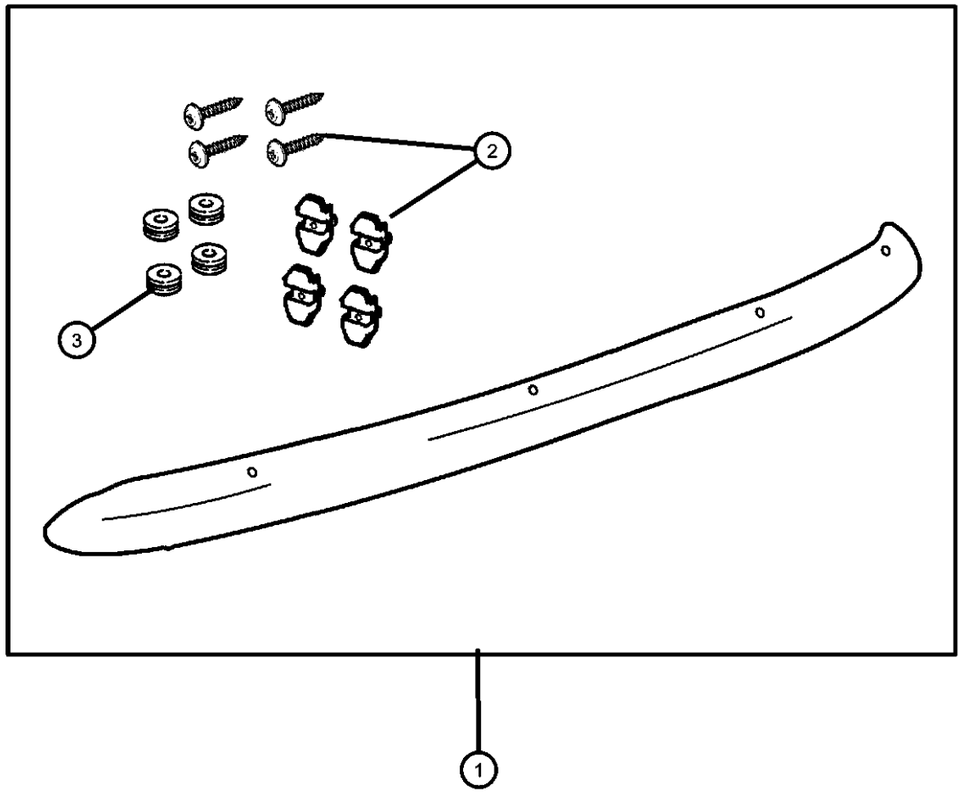

ITEM	PART NUMBER	QTY	LINE	SERIES	BODY	ENGINE	TRANS	TRIM	DESCRIPTION
NOTE: Shield Kit - Color Smoke, Material Lexan.									
1	82204314	1	J, T		74				SHIELD KIT, Air - Front
2	05016373AA	1	J, T		74				RETAINER, Accessories, Contains: 4-Retainers and Screws
3	05014754AA	1	J, T		74				SPACER, Air Deflector

GRAND CHEROKEE (WJ)

SERIES	LINE	BODY	ENGINE	TRANSMISSION
H = Laredo M = Sport P = Limited S = Overland	T = JEEP - 2WD J = JEEP - 4WD U = JEEP - 4WD (RHD)	74 = SPORT UTILITY 4-DR	ERH = Engine - 4.0L Power Tech I-6 EVA = Engine- 4.7L V8 MPI EVC = Engine - 4.7L HO V8 MPI ER0 = All 4.0L 6 Cyl. Gas EV0 = All 4.7L Gas	DGK = 4 Speed Auto, 42RE DGQ = 5 Speed Auto, 45RFE DG0 = All Automatic Transmissions

Skid Plate Package - Front
Figure 1-520

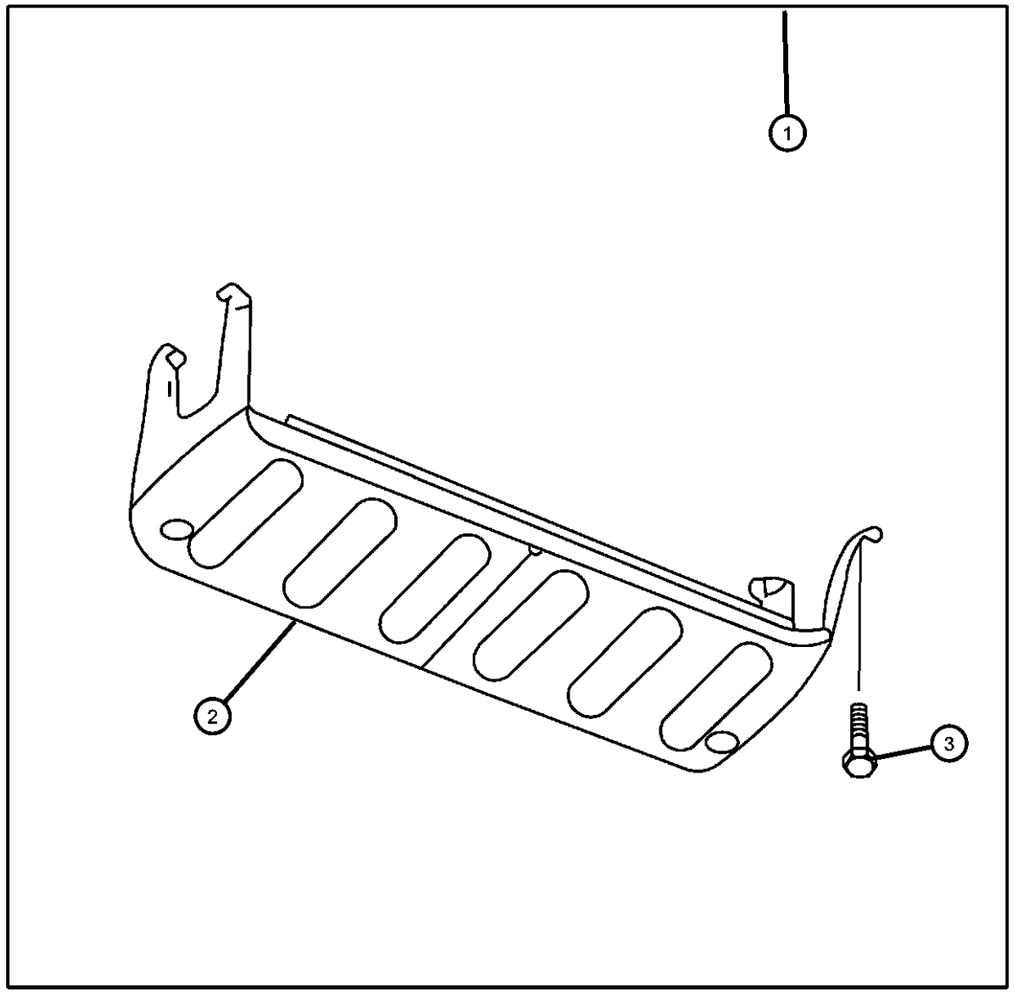

ITEM	PART NUMBER	QTY	LINE	SERIES	BODY	ENGINE	TRANS	TRIM	DESCRIPTION
1	82207487	1	J, T		74				PLATE PACKAGE, Skid - Front
2	52080217AA	1	J						SKID PLATE, Front
3	06505961AA	4	J						SCREW AND WASHER, Hex Head, M10x1.5x40

GRAND CHEROKEE (WJ)

SERIES	LINE	BODY	ENGINE	TRANSMISSION
H = Laredo M = Sport P = Limited S = Overland	T = JEEP - 2WD J = JEEP - 4WD U = JEEP - 4WD (RHD)	74 = SPORT UTILITY 4-DR	ERH = Engine - 4.0L Power Tech I-6 EVA = Engine- 4.7L V8 MPI EVC = Engine - 4.7L HO V8 MPI ER0 = All 4.0L 6 Cyl. Gas EV0 = All 4.7L Gas	DGK = 4 Speed Auto, 42RE DGQ = 5 Speed Auto, 45RFE DG0 = All Automatic Transmissions

Skid Plate Package - Transfer Case
Figure 1-522

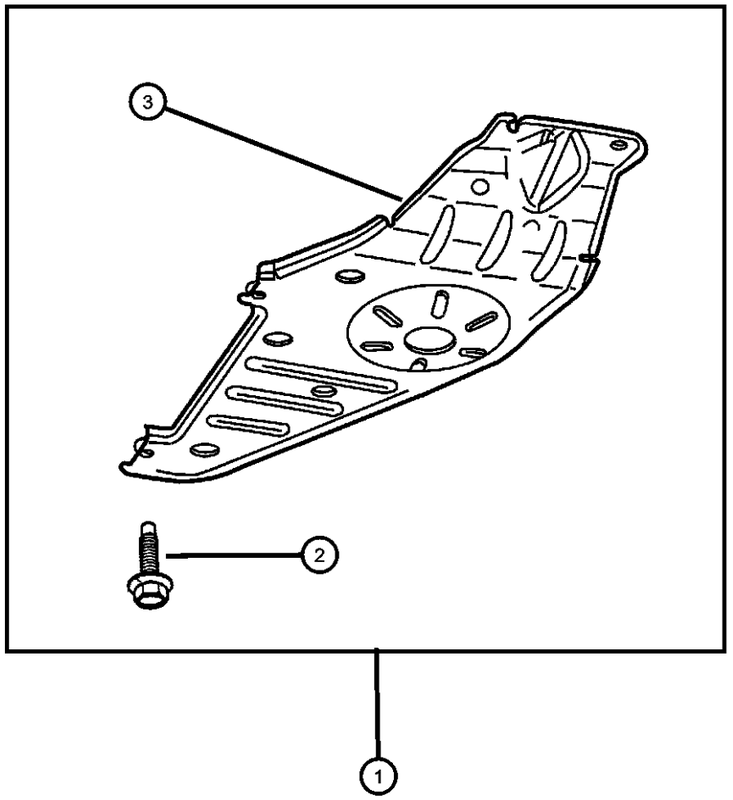

ITEM	PART NUMBER	QTY	LINE	SERIES	BODY	ENGINE	TRANS	TRIM	DESCRIPTION
1	82204489	1	J		74				PLATE PACKAGE, Skid - Transfer Case
2	06503571	4							SCREW AND WASHER, M10x1.50x35
3	52058922	1	J						SKID PLATE, Transfer Case
-4	05013886AA	1	J		74				TOOL, Rivnut

GRAND CHEROKEE (WJ)

SERIES	LINE	BODY	ENGINE	TRANSMISSION
H = Laredo M = Sport P = Limited S = Overland	T = JEEP - 2WD J = JEEP - 4WD U = JEEP - 4WD (RHD)	74 = SPORT UTILITY 4-DR	ERH = Engine - 4.0L Power Tech I-6 EVA = Engine- 4.7L V8 MPI EVC = Engine - 4.7L HO V8 MPI ER0 = All 4.0L 6 Cyl. Gas EV0 = All 4.7L Gas	DGK = 4 Speed Auto, 42RE DGQ = 5 Speed Auto, 45RFE DG0 = All Automatic Transmissions

Heater Kit
Figure 1-610

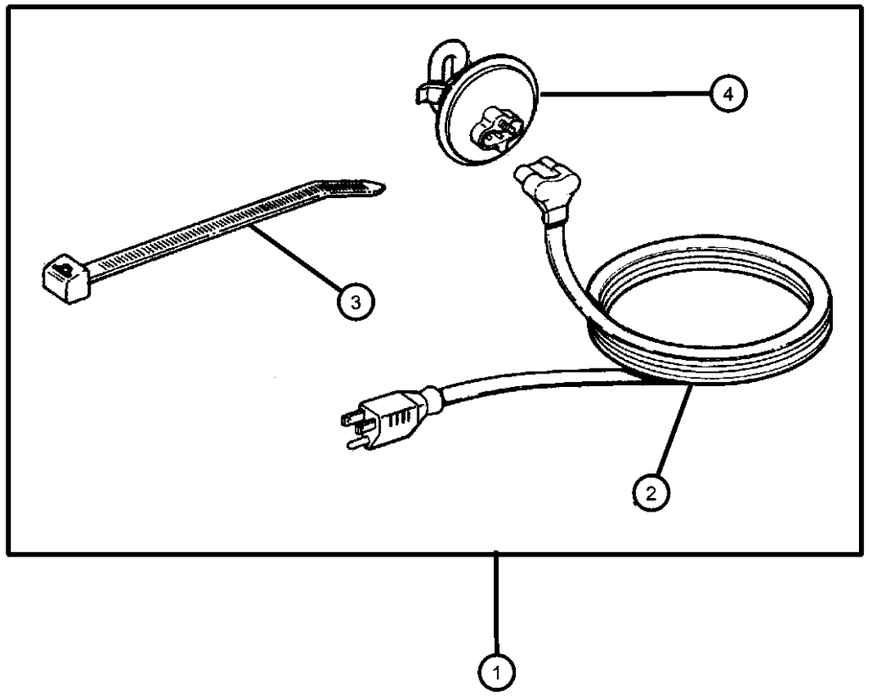

ITEM	PART NUMBER	QTY	LINE	SERIES	BODY	ENGINE	TRANS	TRIM	DESCRIPTION
1									HEATER PACKAGE, Engine Block
	82201506	1							4.0L Engine
	82203640	1	J, T		74				4.7L Engine
2									CORD, Engine Block Heater
	56027117	1							4.7L Engine
	J5752677	1							4.0L Engine
3									STRAP, Tie
	56008876	1							4.0L Engine
		1	J, T		74				4.7L Engine
4		1							HEATER, Engine Block, Serviced In Assembly, (NOT SERVICED),

GRAND CHEROKEE (WJ)

SERIES	LINE	BODY	ENGINE	TRANSMISSION
H = Laredo M = Sport P = Limited S = Overland	T = JEEP - 2WD J = JEEP - 4WD U = JEEP - 4WD (RHD)	74 = SPORT UTILITY 4-DR	ERH = Engine - 4.0L Power Tech I-6 EVA = Engine- 4.7L V8 MPI EVC = Engine - 4.7L HO V8 MPI ER0 = All 4.0L 6 Cyl. Gas EV0 = All 4.7L Gas	DGK = 4 Speed Auto, 42RE DGQ = 5 Speed Auto, 45RFE DG0 = All Automatic Transmissions

Light Package - Fog
Figure 1-615

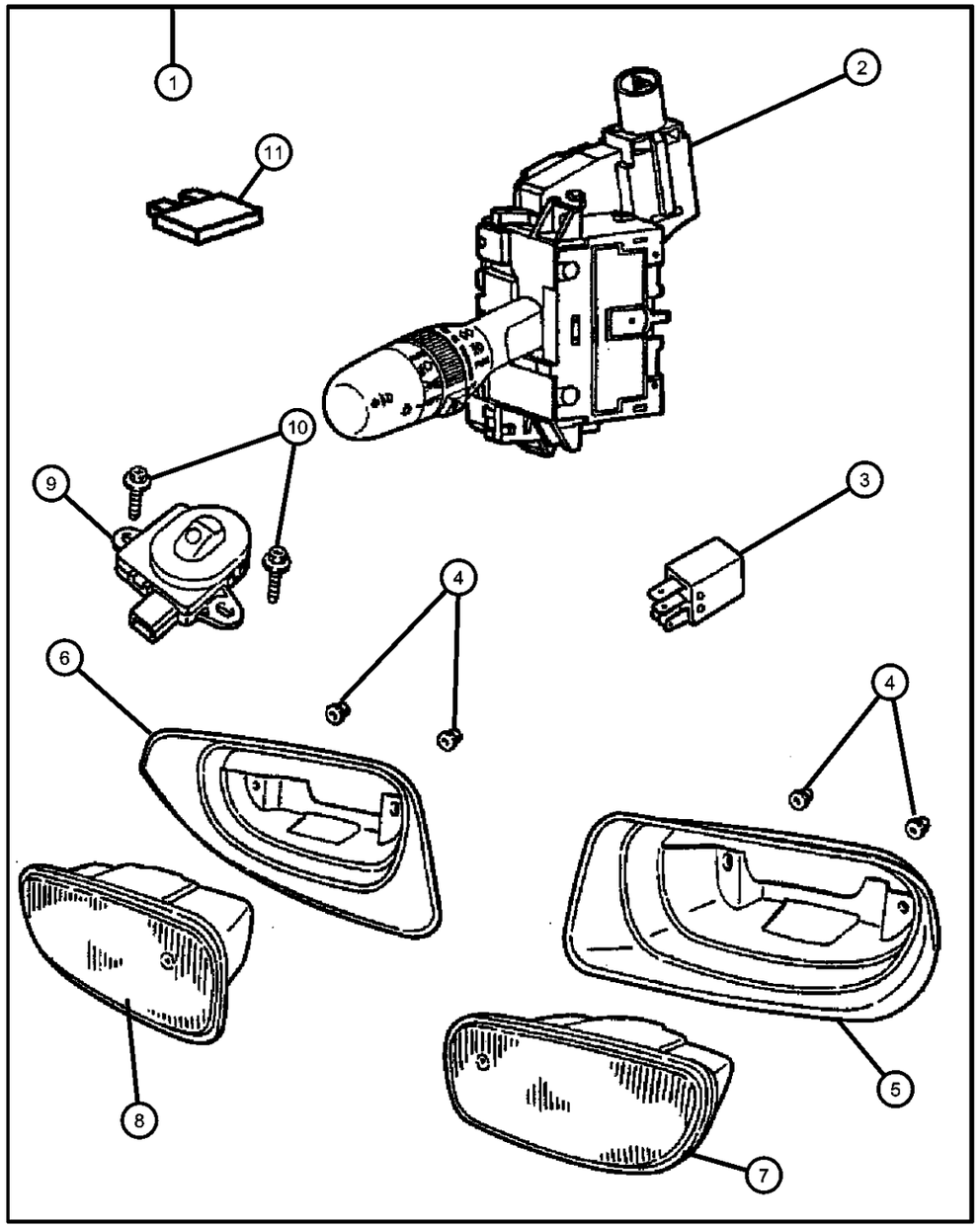

ITEM	PART NUMBER	QTY	LINE	SERIES	BODY	ENGINE	TRANS	TRIM	DESCRIPTION
NOTE: Items 12 thru 15 are additional parts contained in Light Package 82207798									
1									LIGHT PACKAGE, Fog
	82206653	1	J, T		74				Up to 10-28-01
	82207798	1			74				After to 10-28-01
2	56042302AG	1							SWITCH, Multifunction
3	04671168	AR							RELAY, Mini
4	34201358	4							NUT AND WASHER, Hex Nut-Sealing Washer, M6 x 1.00
5	34201358	4							BEZEL, Fog Lamp, (NOT SERVICED)
6	34201358	4							BEZEL, Fog Lamp, (NOT SERVICED)
7	55155137AC	1							LAMP, FogLeft
8	55155136AC	1							LAMP, FogRight
9	56042584AA	1							SENSOR, Headlamp
10	06101946	2							SCREW, Tapping
11	000ATM20	1							FUSE, Mini, 20 AMP, Yellow
-12	000ATM20	1							WIRING, Fog Lamp, See Note, (NOT SERVICED)
-13									STRAP, Tie
	04641780	1			74				7.75 inch
	06016155	1							14.5 inch
-14	34201631	6							RIVET, M6.25x28 Black

GRAND CHEROKEE (WJ)

SERIES	LINE	BODY	ENGINE	TRANSMISSION
H = Laredo M = Sport P = Limited S = Overland	T = JEEP - 2WD J = JEEP - 4WD U = JEEP - 4WD (RHD)	74 = SPORT UTILITY 4-DR	ERH = Engine - 4.0L Power Tech I-6 EVA = Engine- 4.7L V8 MPI EVC = Engine - 4.7L HO V8 MPI ER0 = All 4.0L 6 Cyl. Gas EV0 = All 4.7L Gas	DGK = 4 Speed Auto, 42RE DGQ = 5 Speed Auto, 45RFE DG0 = All Automatic Transmissions

Console Package - Rear
Figure 1-810

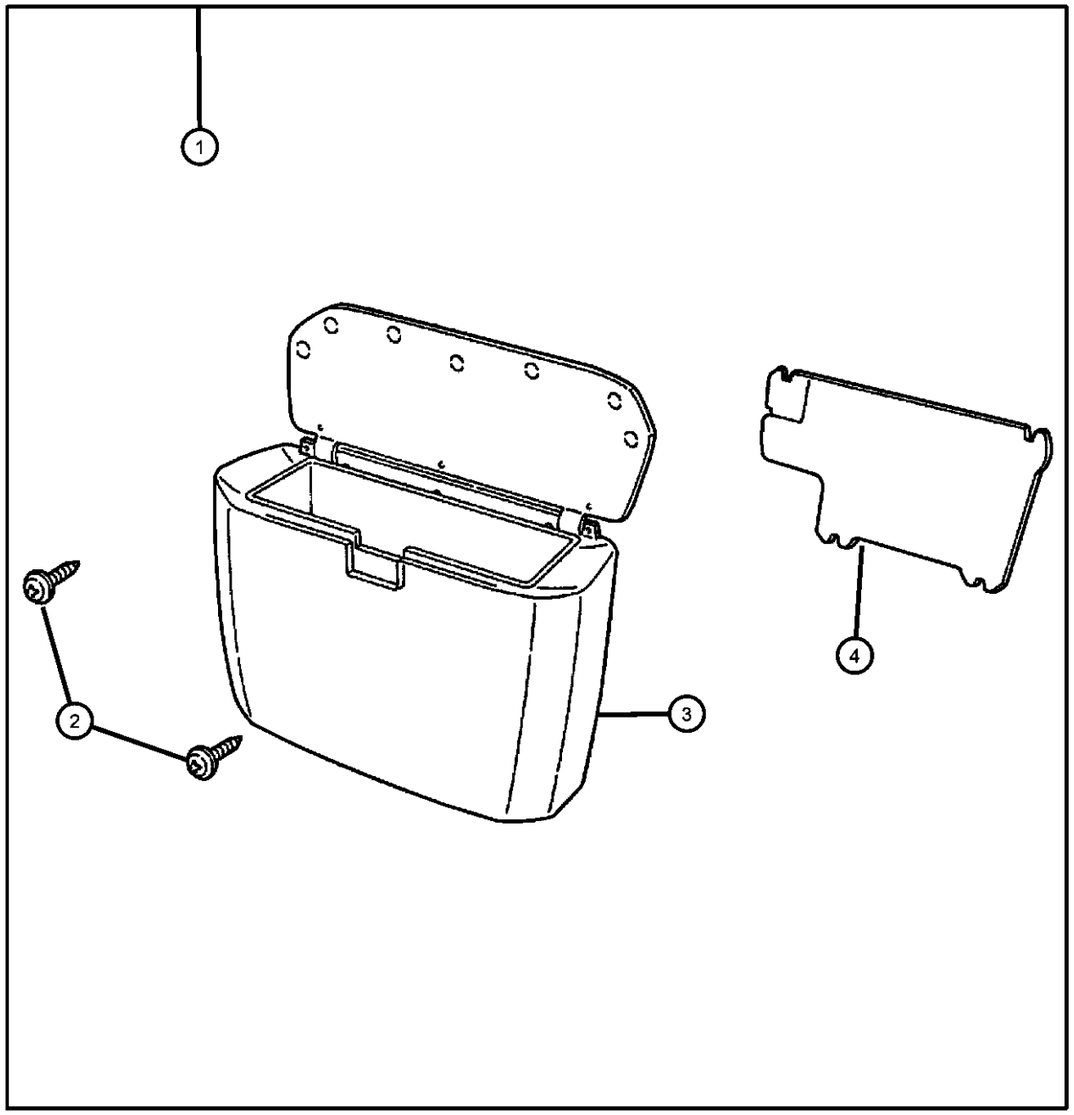

ITEM	PART NUMBER	QTY	LINE	SERIES	BODY	ENGINE	TRANS	TRIM	DESCRIPTION
NOTE: For CD Changer. Rear Right Quarter Panel.									
1									CONSOLE PACKAGE, Rear
	82204626	1	J, T		74				Agate
	82206899	1	J, T		74				Sandstone
2	00153921	1	J, T		74				SCREW
3									BIN, Storage
	5FW371L5AD	1							Agate
	5FW371T5AD	1							Sandstone
4									COVER, Bolt
	5FY38WL5AA	1							Agate
	5FY38XT5AA	1							Sandstone

GRAND CHEROKEE (WJ)

SERIES	LINE	BODY	ENGINE	TRANSMISSION
H = Laredo M = Sport P = Limited S = Overland	T = JEEP - 2WD J = JEEP - 4WD U = JEEP - 4WD (RHD)	74 = SPORT UTILITY 4-DR	ERH = Engine - 4.0L Power Tech I-6 EVA = Engine- 4.7L V8 MPI EVC = Engine - 4.7L HO V8 MPI ER0 = All 4.0L 6 Cyl. Gas EV0 = All 4.7L Gas	DGK = 4 Speed Auto, 42RE DGQ = 5 Speed Auto, 45RFE DG0 = All Automatic Transmissions

Guard Kit - Dog
Figure 1-820

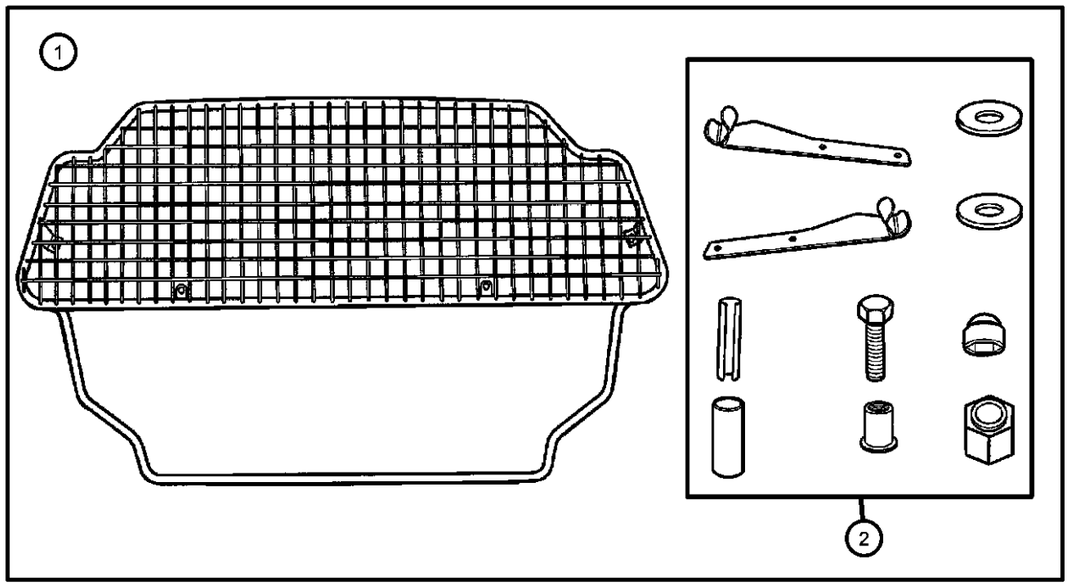

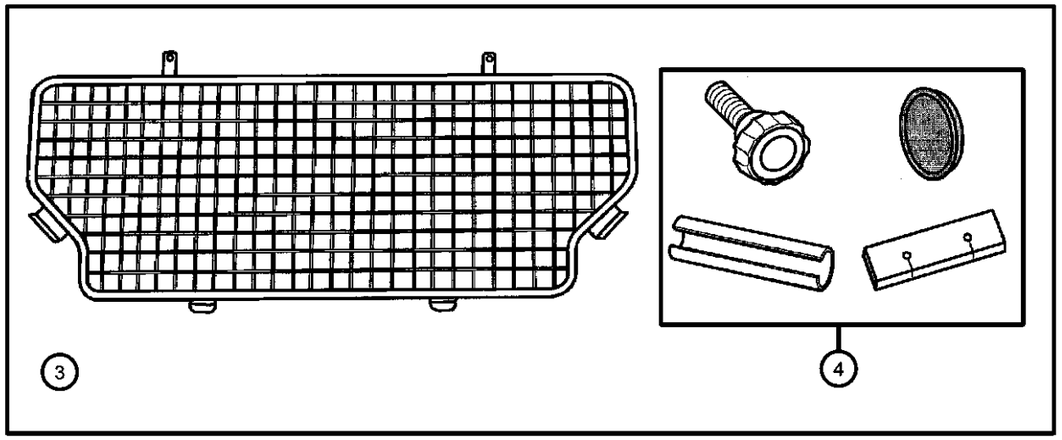

ITEM	PART NUMBER	QTY	LINE	SERIES	BODY	ENGINE	TRANS	TRIM	DESCRIPTION
1	82207563	1							GUARD KIT, Dog GuardUpper
2	05086023AA	1			74				HARDWARE KIT, Load PartitionUpper
3	82205441	1	J, U		74				GUARD KIT, Dog GuardLower
4	05086024AA	1							HARDWARE KIT, Load PartitionLower

GRAND CHEROKEE (WJ)

SERIES	LINE	BODY	ENGINE	TRANSMISSION
H = Laredo	T = JEEP - 2WD	74 = SPORT UTILITY 4-DR	ERH = Engine - 4.0L Power Tech I-6	DGK = 4 Speed Auto, 42RE
M = Sport	J = JEEP - 4WD		EVA = Engine- 4.7L V8 MPI	DGQ = 5 Speed Auto, 45RFE
P = Limited	U = JEEP - 4WD (RHD)		EVC = Engine - 4.7L HO V8 MPI	DG0 = All Automatic Transmissions
S = Overland			ER0 = All 4.0L 6 Cyl. Gas	
			EV0 = All 4.7L Gas	

Alarm - EVS Plus System
Figure 1-914

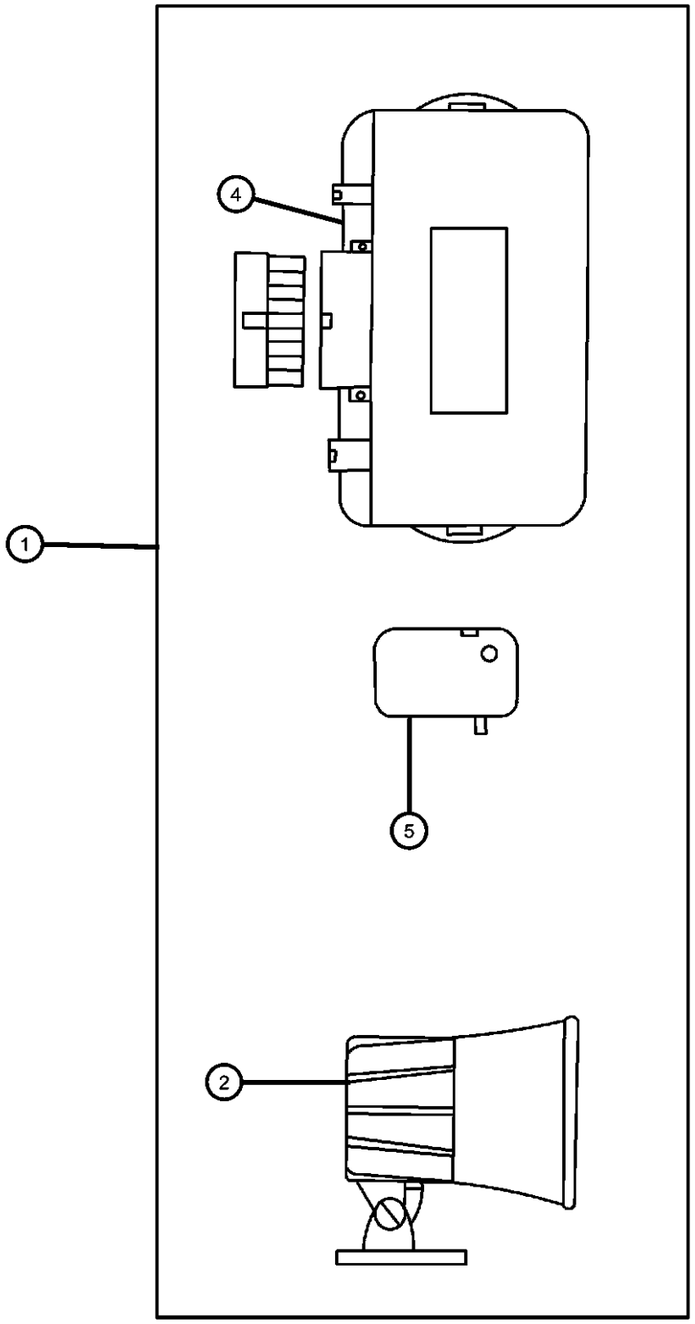

ITEM	PART NUMBER	QTY	LINE	SERIES	BODY	ENGINE	TRANS	TRIM	DESCRIPTION
1	82204268	1	J, T		74				MODULE, Security Alarm
2	82203198	1	J, T		74				SIREN, Alarm
-3	04886259AA	1	J, T		74				INDICATOR, Valet Status
4	05011619AA	1	J, T		74				MODULE, Security Alarm
5	04886261AA	1	J, T		74				SENSOR, Shock, With Connector

GRAND CHEROKEE (WJ)

SERIES	LINE	BODY	ENGINE	TRANSMISSION
H = Laredo M = Sport P = Limited S = Overland	T = JEEP - 2WD J = JEEP - 4WD U = JEEP - 4WD (RHD)	74 = SPORT UTILITY 4-DR	ERH = Engine - 4.0L Power Tech I-6 EVA = Engine- 4.7L V8 MPI EVC = Engine - 4.7L HO V8 MPI ER0 = All 4.0L 6 Cyl. Gas EV0 = All 4.7L Gas	DGK = 4 Speed Auto, 42RE DGQ = 5 Speed Auto, 45RFE DG0 = All Automatic Transmissions

AR = use ase required - = Non illustrrated part

Group - 2

Front Suspension & Drive

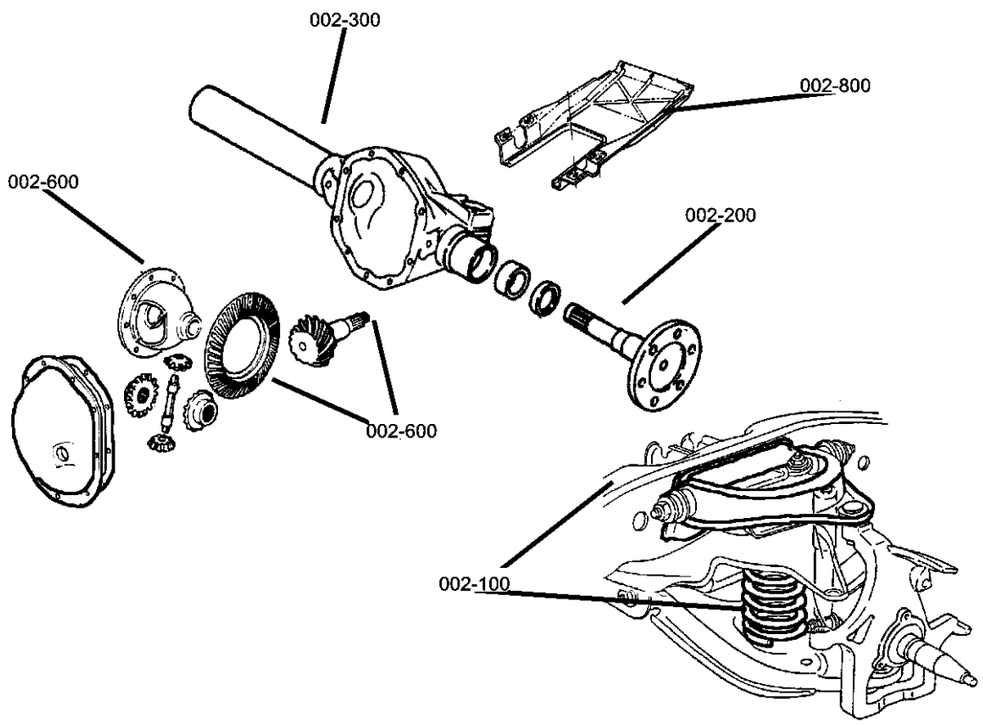

002-100 Front Suspension 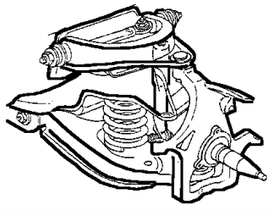	**002-200** Front Axle Drive Shafts 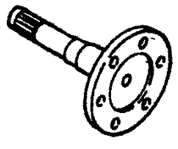	**002-300** Front Axle Housing 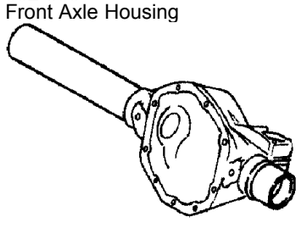	**002-400** Front Axle Assembly 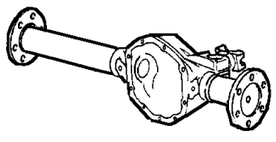
002-600 Front Axle Differential 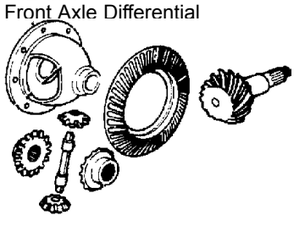	**002-800** Front Axle Skid Plate 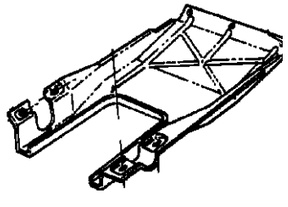		

Group - 2 Front Suspension & Drive

Illustration Title — Group-Fig. No.

Front Suspension
Suspension, Front Springs with Control Arms and Shocks ..... Fig. 2 - 110
Front Stabilizer Bar and Track Bar ..... Fig. 2 - 120

Front Axle Drive Shafts
Front Axle Shafts ..... Fig. 2 - 210

Front Axle Housing
Housing,Front Axle,2 Wheel Drive ..... Fig. 2 - 310
Housing,Front Axle,4 Wheel Drive ..... Fig. 2 - 320

Front Axle Assembly
Front Axle Assembly ..... Fig. 2 - 410

Front Axle Differential
Differential, Front Axle ..... Fig. 2 - 610

Front Axle Skid Plate
Skid Plate, Front Axle ..... Fig. 2 - 810

Suspension, Front Springs with Control Arms and Shocks
Figure 2-110

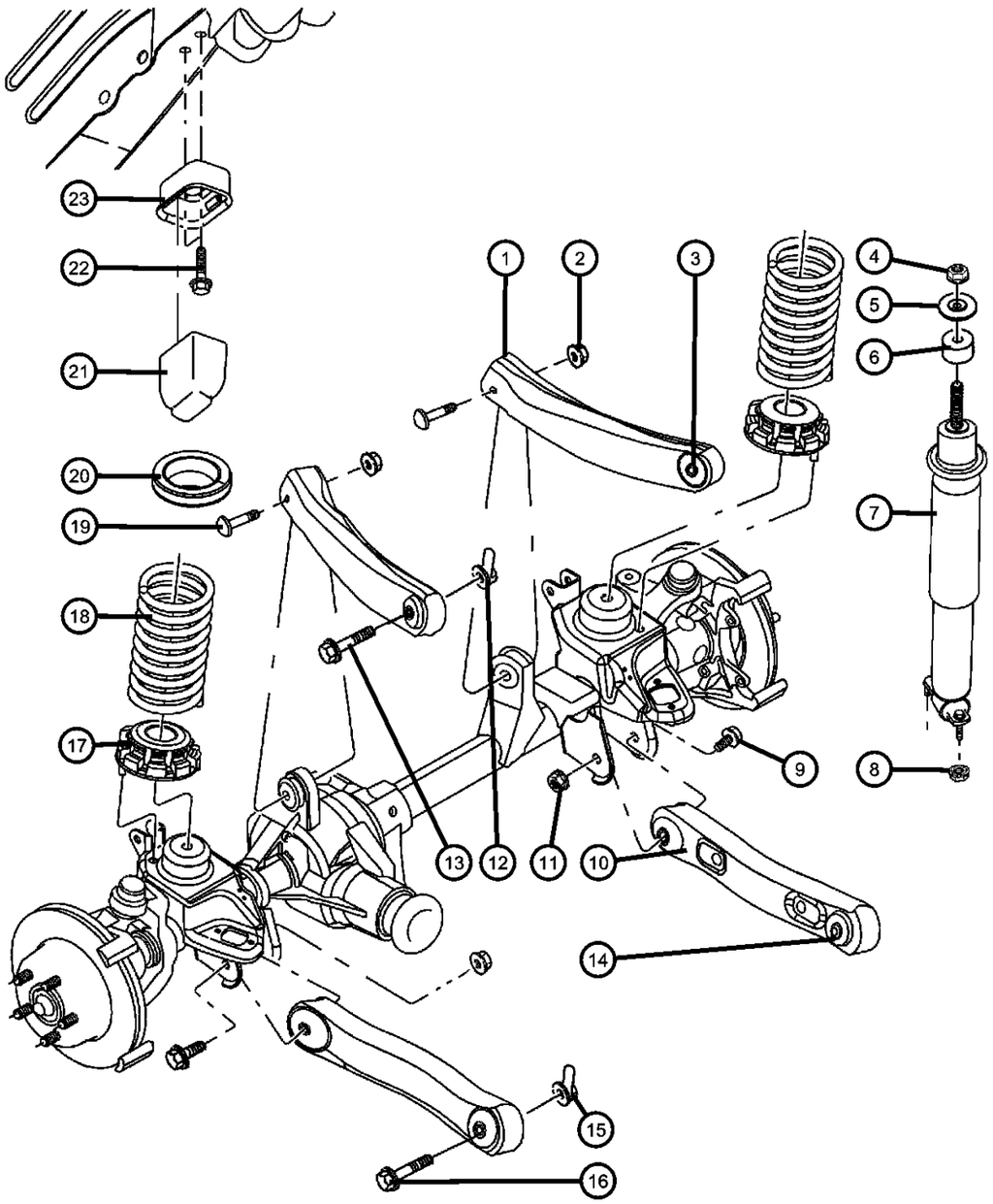

ITEM	PART NUMBER	QTY	LINE	SERIES	BODY	ENGINE	TRANS	TRIM	DESCRIPTION
Note:Sales Codes;									
[ER0]=Engines - All 4.0L 6 Cylinder Gas									
[EV0]=Engines - All 4.7L Gas									
[SDA]=Suspension - Quadra Coil									
[SDU]=Heavy Duty Suspension									
[SDV]=Suspension - Overland									
[ZKE] to [ZZG]=Spring Sales Codes will be found on Vehicle Identification Number [VIN} Sales Code Listing.									
1	52088208AC	2							ARM, Control, with Bushing, Upper
2	06502696	2							NUT, Hex Flange Lock, M14x1.50, UCA to Axle, Mounting
3	52088214	2							BUSHING, Control Arm, to Sill
4	06506443AA	2							NUT, Nylock Hex, M10x1.5, Shock, Mounting
5	52088517	2							RETAINER, Shock AbsorberUpper
6	52088289AB	2							GROMMET, Shock Absorber
7									SHOCK ABSORBER PACKAGE, Suspension, Front
	05014730AH	2							[SDA]
	0SGR5128								Rancho Shock
	G0060052								Mopar V-Line Alternative Part
	0SG23338								Mopar V-Line Alternative Part
	05014732AD	2							[SDU]
	0SGR5128								Rancho Shock
	0SG23338								Mopar V-Line Alternative Part
8	06101695	4							NUT, Hex Flange Lock, M8x1.25, Shock Mounting, Lower
9	06505214AA	2							SCREW, Hex Flange Head, M14x2.00x114, LCA to Axle, Mounting
10									ARM, Control
	52080138AA	2							[SDV] with Bushing, Lower
	52088217AB	2							with Bushing, Lower
11	06502698	3							NUT, Hex Flange Lock, LCA to Axle, Mounting
12	06505438AA	2							NUT, Hex, M10-1.5, UCA to Sill, Mounting
13	06505472AA	2							SCREW, Hex Flange Head, M10x1.50x81, UCA to Sill, Mounting
14									BUSHING, Control Arm

GRAND CHEROKEE (WJ)

SERIES	LINE	BODY	ENGINE	TRANSMISSION
H = Laredo	T = JEEP - 2WD	74 = SPORT UTILITY 4-DR	ERH = Engine - 4.0L Power Tech I-6	DGK = 4 Speed Auto, 42RE
M = Sport	J = JEEP - 4WD		EVA = Engine- 4.7L V8 MPI	DGQ = 5 Speed Auto, 45RFE
P = Limited	U = JEEP - 4WD (RHD)		EVC = Engine - 4.7L HO V8 MPI	DG0 = All Automatic Transmissions
S = Overland			ER0 = All 4.0L 6 Cyl. Gas	
			EV0 = All 4.7L Gas	

Suspension, Front Springs with Control Arms and Shocks
Figure 2-110

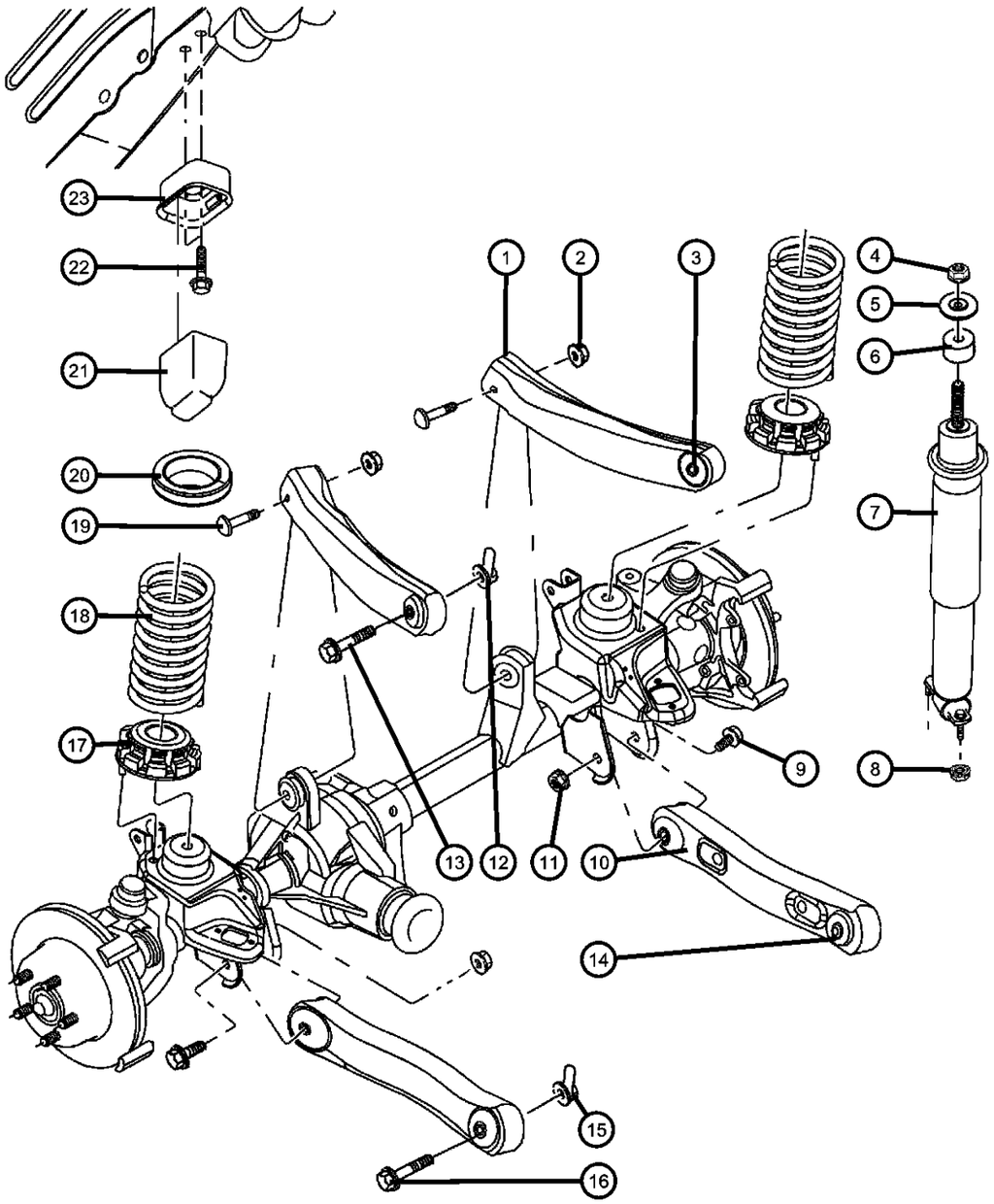

ITEM	PART NUMBER	QTY	LINE	SERIES	BODY	ENGINE	TRANS	TRIM	DESCRIPTION
	52080312AA	2							[SDV] UCA to Sill
	52088220	2							UCA to Sill
15	06505439AA	1							NUT AND RETAINER, Hex Flange Locking, M14 x 2.00, LCA to Sill
16	06506033AA	2							BOLT, Hex Flange Head, M14x2.00x105.00, LCA to Sill
17	52088401	2							ISOLATOR, Front Suspension SpringLower
18									SPRING, Front Coil
	52088264	1							[ZKG,ZYG]
	52088262	1							[ZKE,ZYE]
	52088263	1							[ZKF,ZYF]
	52088265	1							[ZKH,ZYH]
	52088267	1							[ZLE,ZZE]
	52088268	1							[ZLF,ZZF]
	52088269	1							[ZKI,ZYI]
	52089421	1							[ZLG,ZZG]
19	06505306AA	2							SCREW, Truss Head, M10x1.5x70, UCA to Axle, Mounting
20	52088257AB	2							ISOLATOR, Front Suspension SpringUpper
21	52088256	2							BUMPER, JounceUpper
22	06100584	4				ER0, EV0			BOLT AND CONED WASHER, Hex Head, M8x30x20Upper
23	52088254	2							CUP, Jounce BumperUpper

GRAND CHEROKEE (WJ)

SERIES	LINE	BODY	ENGINE	TRANSMISSION
H = Laredo M = Sport P = Limited S = Overland	T = JEEP - 2WD J = JEEP - 4WD U = JEEP - 4WD (RHD)	74 = SPORT UTILITY 4-DR	ERH = Engine - 4.0L Power Tech I-6 EVA = Engine- 4.7L V8 MPI EVC = Engine - 4.7L HO V8 MPI ER0 = All 4.0L 6 Cyl. Gas EV0 = All 4.7L Gas	DGK = 4 Speed Auto, 42RE DGQ = 5 Speed Auto, 45RFE DG0 = All Automatic Transmissions

Front Stabilizer Bar and Track Bar
Figure 2-120

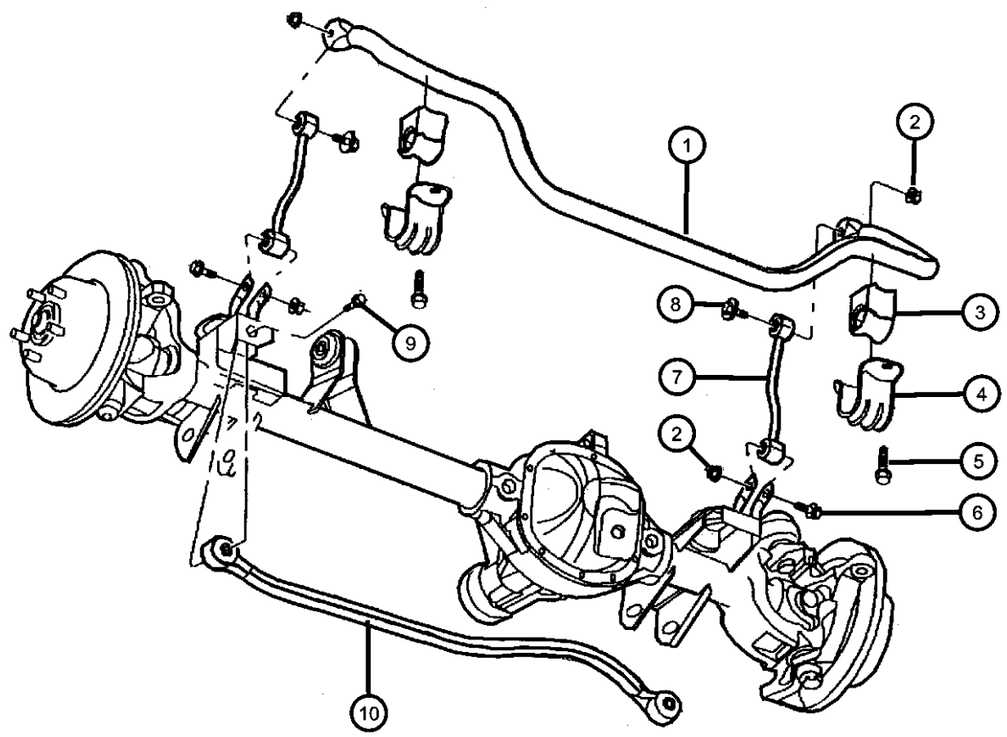

ITEM	PART NUMBER	QTY	LINE	SERIES	BODY	ENGINE	TRANS	TRIM	DESCRIPTION
Note:Sales Codes; [ER0]=Engines - All 4.0L 6 Cylinder Gas [EV0]=Engines - All 4.7L Gas									
1	52088281	1				ER0, EV0			BAR, Front Sway
2	06502697	4							NUT, Hex Flange Lock, M12x1.75
3	52088284AD	2							BUSHING, Stabilizer Bar
4	52088285	2							RETAINER, Stabilizer Bar Grommet
5	06502936	4							SCREW AND WASHER, Hex Head Pilot Point, M12x1.75x45
6	06502473	2							BOLT, Hex Flange Head, M12x1.75x65
7	52088283	2							LINK, Sway Eliminator
8	06505353AA	2							SCREW AND WASHER, M12x1.75x60
9	06506147AA	1							SCREW, Hex Flange Head, M12x1.75x80, Track Bar to Axle, Mounting
10	52088305AB	1	J						TRACK BAR, Front
-11	06505324AA	1							BOLT AND RETAINER, M12x1.75x80, Track Bar to Body, Mounting
-12	06502697	1							NUT, Hex Flange Lock, M12x1.75, Track Bar to Body, Mounting

GRAND CHEROKEE (WJ)

SERIES	LINE	BODY	ENGINE	TRANSMISSION
H = Laredo	T = JEEP - 2WD	74 = SPORT UTILITY 4-DR	ERH = Engine - 4.0L Power Tech I-6	DGK = 4 Speed Auto, 42RE
M = Sport	J = JEEP - 4WD		EVA = Engine- 4.7L V8 MPI	DGQ = 5 Speed Auto, 45RFE
P = Limited	U = JEEP - 4WD (RHD)		EVC = Engine - 4.7L HO V8 MPI	DG0 = All Automatic Transmissions
S = Overland			ER0 = All 4.0L 6 Cyl. Gas	
			EV0 = All 4.7L Gas	

Front Axle Shafts
Figure 2-210

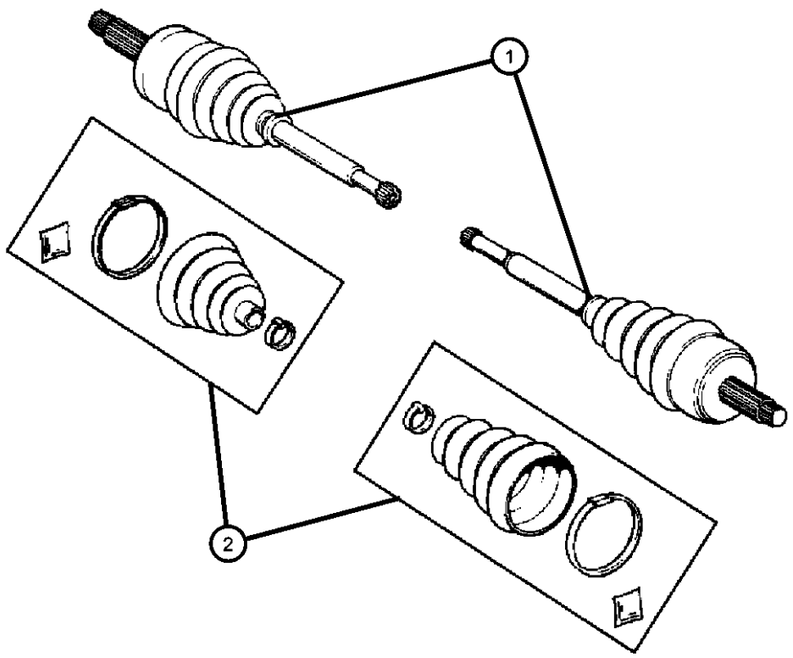

ITEM	PART NUMBER	QTY	LINE	SERIES	BODY	ENGINE	TRANS	TRIM	DESCRIPTION
Note;Sales Code; [DSB]=Axle - Vari-Lok Progressive Front									
1									SHAFT, Axle
	05012456AB	1	J						without [DSB], Right
	05012457AB	1	J						without [DSB], Left
	05012748AB	1	J						[DSB], Right
	05012749AB	1	J						[DSB], Left
2	04796233AB	1	J						BOOT KIT, Half Shaft, Consists of 1-Boot,2-Clamps,and 1-Grease Packet, Right or Left

GRAND CHEROKEE (WJ)

SERIES	LINE	BODY	ENGINE	TRANSMISSION
H = Laredo M = Sport P = Limited S = Overland	T = JEEP - 2WD J = JEEP - 4WD U = JEEP - 4WD (RHD)	74 = SPORT UTILITY 4-DR	ERH = Engine - 4.0L Power Tech I-6 EVA = Engine- 4.7L V8 MPI EVC = Engine - 4.7L HO V8 MPI ER0 = All 4.0L 6 Cyl. Gas EV0 = All 4.7L Gas	DGK = 4 Speed Auto, 42RE DGQ = 5 Speed Auto, 45RFE DG0 = All Automatic Transmissions

Housing,Front Axle,2 Wheel Drive
Figure 2-310

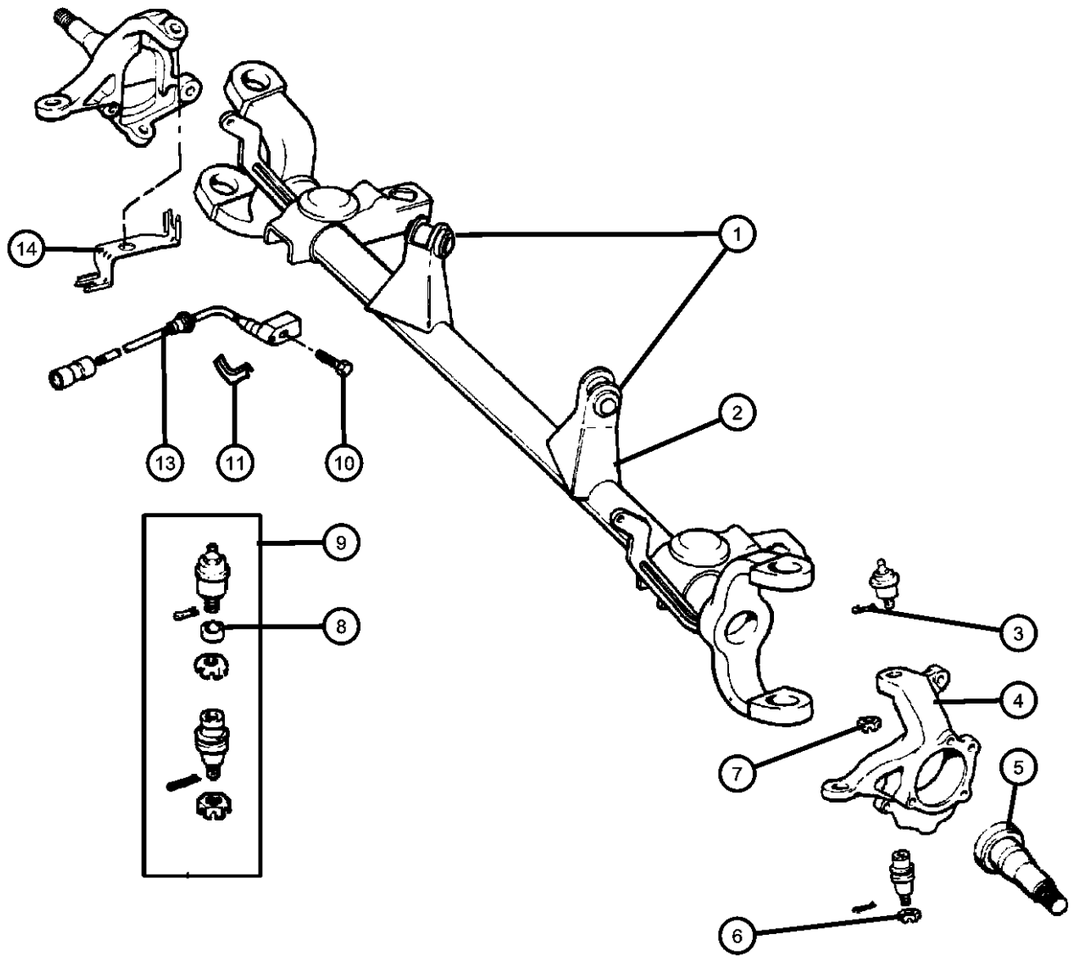

ITEM	PART NUMBER	QTY	LINE	SERIES	BODY	ENGINE	TRANS	TRIM	DESCRIPTION
1	52088214	2	T						BUSHING, Control ArmUpper
2	05012433AA	1	T						HOUSING, Axle
3	11010069	6	T						PIN, Cotter, M4x40.00
4									KNUCKLE, Front
	05011976AB	1	T						Right
	05011977AB	1	T						Left
5	05012438AA	2	T						SHAFT, DummyRight or Left
6	J8123318	2	T						NUT, Ball Joint Mounting, Lower
7	J0125258	2	T						NUT, Steering Knuckle Socket, Ball Joint Mounting, Upper
8	83500203	1	T						RING, Ball JointUpper
9	05012432AA	2	T						BALL JOINT KIT, Knuckle
10	05014326AA	2	T						BOLT
11									BRACKET, Brake Sensor Wire
	05014324AA	1	T						Right
	05014325AA	1	T						Left
-12	05014326AA	2	T						BOLT, Sensor Wire Bracket to Housing, Mounting
13									SENSOR, Wheel Speed
	56041316AB	1	T						Right
	56041317AB	1	T						Left
14									BRACKET, Brake Sensor
	56026766	1	T						Right
	56026767	1	T						Left

GRAND CHEROKEE (WJ)

SERIES	LINE	BODY	ENGINE	TRANSMISSION
H = Laredo M = Sport P = Limited S = Overland	T = JEEP - 2WD J = JEEP - 4WD U = JEEP - 4WD (RHD)	74 = SPORT UTILITY 4-DR	ERH = Engine - 4.0L Power Tech I-6 EVA = Engine- 4.7L V8 MPI EVC = Engine - 4.7L HO V8 MPI ER0 = All 4.0L 6 Cyl. Gas EV0 = All 4.7L Gas	DGK = 4 Speed Auto, 42RE DGQ = 5 Speed Auto, 45RFE DG0 = All Automatic Transmissions

Housing,Front Axle,4 Wheel Drive
Figure 2-320

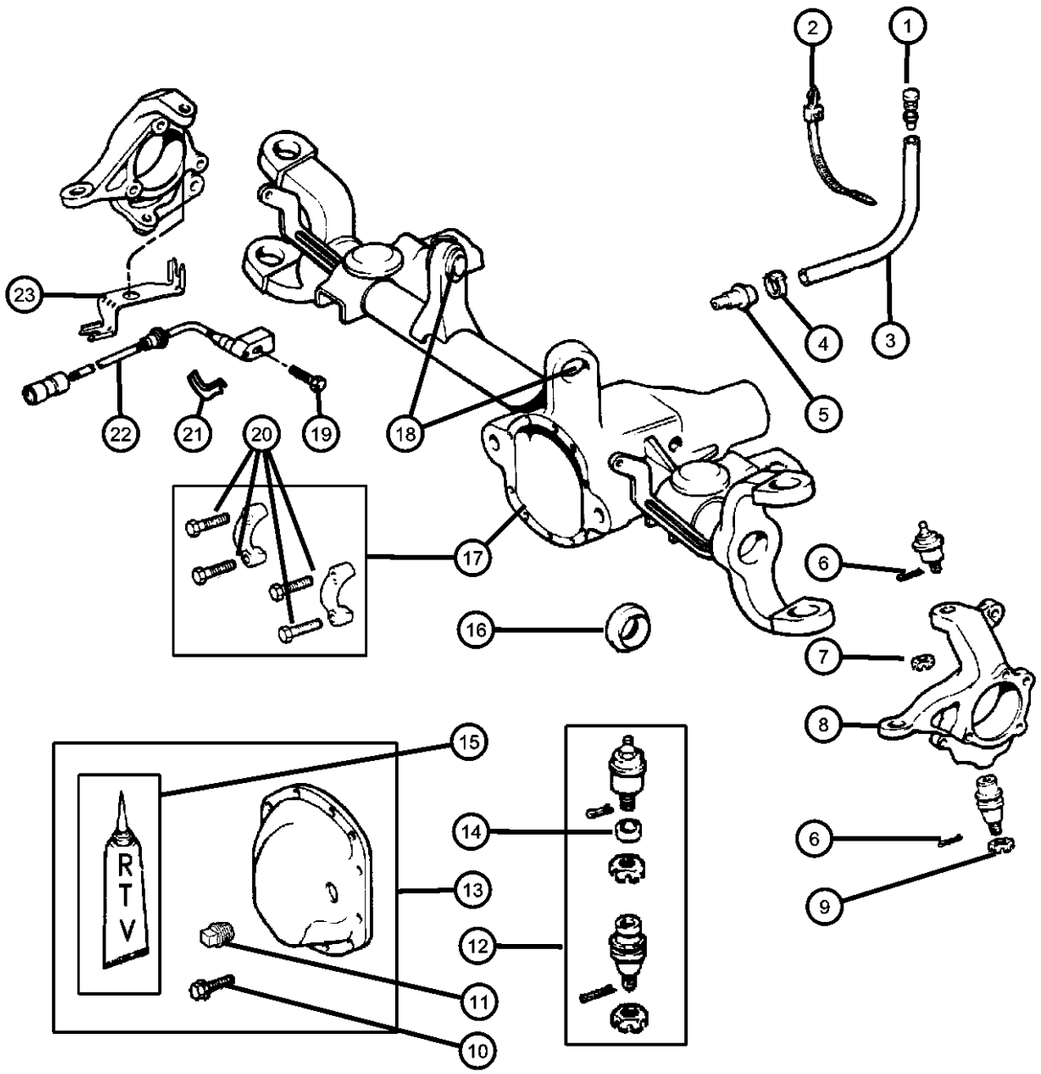

ITEM	PART NUMBER	QTY	LINE	SERIES	BODY	ENGINE	TRANS	TRIM	DESCRIPTION
1	52099257AA	1	J						VENT, AxleUpper
2	J4175376	3							STRAP, Tie
3	HFV00516	2							HOSE, Fuel And Vapor, 25 Foot Roll 5/16"
4	06503573	1							CLIPLower
5	83504653	1	J						VENT, AxleLower
6	11010069	2	J						PIN, Cotter, M4x40.00, As Required
7	J0125258	1	J						NUT, Hex Slotted, As Required, Upper
8									KNUCKLE, Front
	05011976AB	1	J						Right
	05011977AB	1	J						Left
9	J8123318	1	J						NUT, As Required, Lower
10	02954031	10	J						BOLT, Differential Cover
11	J4004751	1	J						PLUG, Differential Cover
12	05012432AA	2	J						BALL JOINT KIT, KnuckleRight or Left
13	05012451AA	1	J						COVER, Differential
14	83500203	1	J						RING, Ball Joint, As Required
15	05010884AA	1	J						SEALANT, RTV
16	04874477	2	J						SEAL, Axle Drive ShaftRight or Left
17	05012445AB	1	J						HOUSING, Axle
18	52088214	2	J						BUSHING, Control Arm, Control Arm, Upper
19	05012434AA	2	J						BOLT, Sensor, Mounting
20	04897482AB	4	J						BOLT, Differential
21									BRACKET, Brake Sensor Wire
	05014324AA	1	J						Right
	05014325AA	1	J						Left
22									SENSOR, Wheel Speed
	56041316AB	1	J						Right
	56041317AB	1	J						Left
23									BRACKET, Brake Sensor
	56026766	1	J						Right
	56026767	1	J						Left

GRAND CHEROKEE (WJ)

SERIES	LINE	BODY	ENGINE	TRANSMISSION
H = Laredo M = Sport P = Limited S = Overland	T = JEEP - 2WD J = JEEP - 4WD U = JEEP - 4WD (RHD)	74 = SPORT UTILITY 4-DR	ERH = Engine - 4.0L Power Tech I-6 EVA = Engine- 4.7L V8 MPI EVC = Engine - 4.7L HO V8 MPI ER0 = All 4.0L 6 Cyl. Gas EV0 = All 4.7L Gas	DGK = 4 Speed Auto, 42RE DGQ = 5 Speed Auto, 45RFE DG0 = All Automatic Transmissions

Front Axle Assembly
Figure 2-410

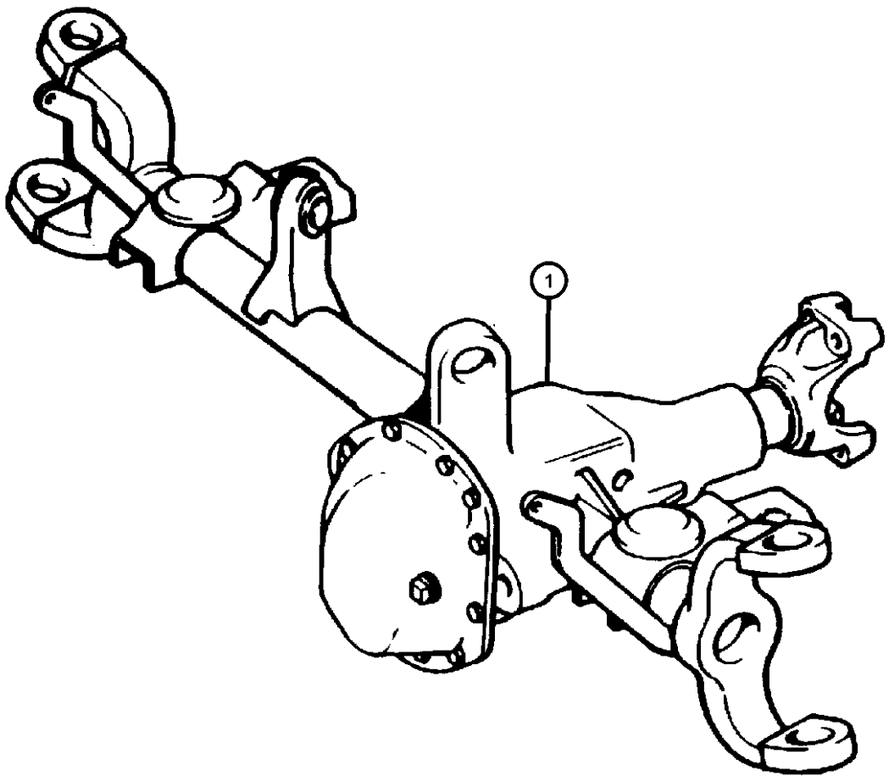

ITEM	PART NUMBER	QTY	LINE	SERIES	BODY	ENGINE	TRANS	TRIM	DESCRIPTION
Note:Sales Codes;									
[DHF]=Quadra-Trac II On Demand 4 Wheel Drive System									
[DHP]=Selec-Trac Full Time 4 Wheel Drive System									
[DMD]=Axle Ratio 3.55									
[DME]=Axle Ratio 3.73									
[DSB]=Axle - Vari-Lok Progressive Front									
1									AXLE, Service Front
	05066445AA	1	J						[DME,DHF,DHP]
	04874468								Mopar SAE 80W-90 Gear Lube Quart Bottle
	68003054AA								Mopar SAE 80W-90 Gear Lube 16 Gallon Keg
	04874469								Mopar SAE 75W-140 Synthetic Gear and Axle Lube Quart
	68003055AA								Mopar SAE 75W-140 Synthetic Gear and Axle Lube 16 Gallon Keg
	05066449AA	1	J						[DME,DHF,DSB]
	05073493AA	1	J						[DMD,DHF,DHP]
	04874468								Mopar SAE 80W-90 Gear Lube Quart Bottle
	68003054AA								Mopar SAE 80W-90 Gear Lube 16 Gallon Keg
	04874469								Mopar SAE 75W-140 Synthetic Gear and Axle Lube Quart
	68003055AA								Mopar SAE 75W-140 Synthetic Gear and Axle Lube 16 Gallon Keg

GRAND CHEROKEE (WJ)

SERIES	LINE	BODY	ENGINE	TRANSMISSION
H = Laredo	T = JEEP - 2WD	74 = SPORT UTILITY 4-DR	ERH = Engine - 4.0L Power Tech I-6	DGK = 4 Speed Auto, 42RE
M = Sport	J = JEEP - 4WD		EVA = Engine- 4.7L V8 MPI	DGQ = 5 Speed Auto, 45RFE
P = Limited	U = JEEP - 4WD (RHD)		EVC = Engine - 4.7L HO V8 MPI	DG0 = All Automatic Transmissions
S = Overland			ER0 = All 4.0L 6 Cyl. Gas	
			EV0 = All 4.7L Gas	

Differential, Front Axle
Figure 2-610

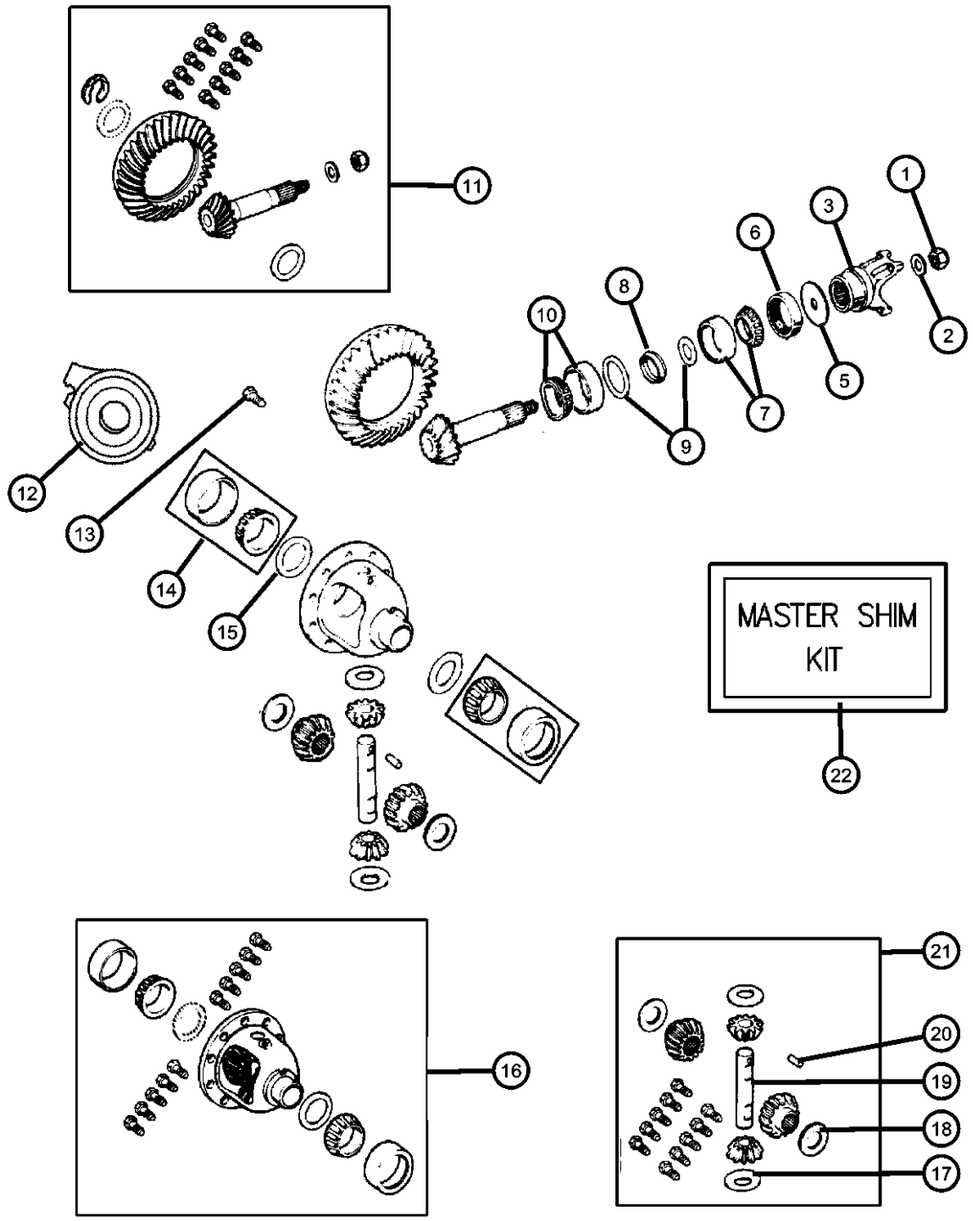

ITEM	PART NUMBER	QTY	LINE	SERIES	BODY	ENGINE	TRANS	TRIM	DESCRIPTION
Note:Sales Codes; [DMD]=Axle Ratio 3.55 [DME]=Axle Ratio 3.73 [DSB]=Axle - Vari-Lok Progressive Front									
1									NUT, Pinion Yoke
	01791575	1	J						[DME]
	05017755AA	1	J						[DMD]
2	01791576	1	J						WASHER, Pinion Yoke, [DME] Only
3	05019624AA	1	J						YOKE, Axle
-4	05012453AA	1	J						O RING, Pinion Flange, Fits Over Hub of Axle Yoke
5	04031974	1	J						SLINGER, Drive Pinion
6	05066446AA	1	J						SEAL, Drive Pinion
7	05252508	1	J						BEARING, Drive Pinion, Bearing and Cup, Front
8	04864845AB	1	J						SPACER, Crush
9									SHIM, Drive Pinion Bearing, Replacement Individual PINION Shims for Master Shim Kit 5017134AA.
	05017139AA	1	J						[.052]
	05017140AA	1	J						[.053]
	05017141AA	1	J						[.054]
	05017142AA	1	J						[.055]
	05017143AA	1	J						[.056]
	05017144AA	1	J						[.057]
	05017145AA	1	J						[.058]
	05017146AA	1	J						[.059]
	05017149AA	1	J						[.060]
	05017150AA	1	J						[.061]
	05017151AA	1	J						[.062]
	05017152AA	1	J						[.063]
	05017153AA	1	J						[.064]
	05017154AA	1	J						[.065]
	05017155AA	1	J						[.066]
	05017156AA	1	J						[.067]

GRAND CHEROKEE (WJ)

SERIES	LINE	BODY	ENGINE	TRANSMISSION
H = Laredo M = Sport P = Limited S = Overland	T = JEEP - 2WD J = JEEP - 4WD U = JEEP - 4WD (RHD)	74 = SPORT UTILITY 4-DR	ERH = Engine - 4.0L Power Tech I-6 EVA = Engine- 4.7L V8 MPI EVC = Engine - 4.7L HO V8 MPI ER0 = All 4.0L 6 Cyl. Gas EV0 = All 4.7L Gas	DGK = 4 Speed Auto, 42RE DGQ = 5 Speed Auto, 45RFE DG0 = All Automatic Transmissions

Differential, Front Axle
Figure 2-610

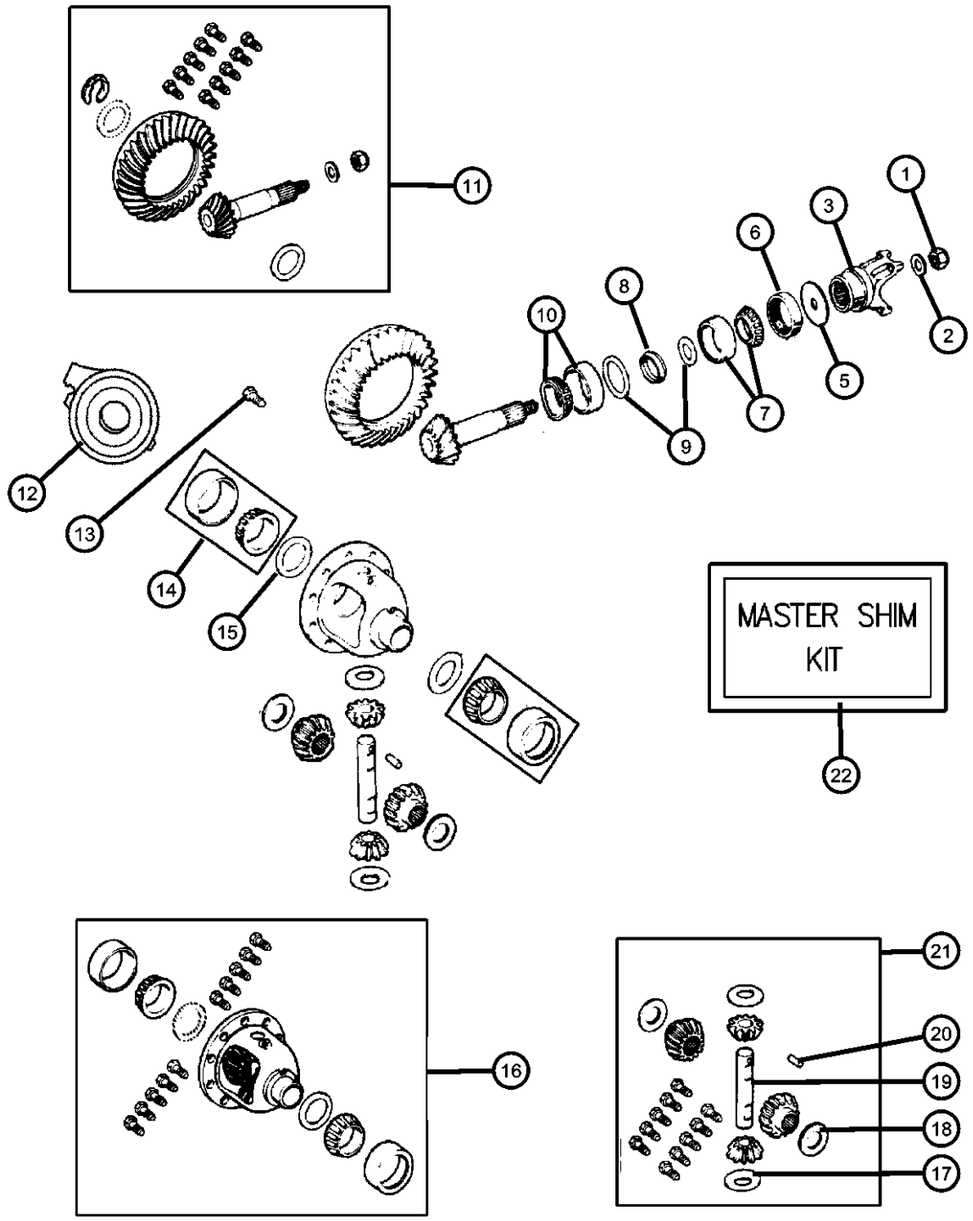

ITEM	PART NUMBER	QTY	LINE	SERIES	BODY	ENGINE	TRANS	TRIM	DESCRIPTION
10	J8126499	1	J						BEARING, Drive Pinion, Bearing and Cup, Rear
11									GEAR KIT, Ring And Pinion
	05012447AB	1	J						[DME]
	05012476AB	1	J						[DMD]
12	05012725AA	1	J						PLENUM, Differential, [DSB]
13	05252503	10	J						SCREW, Drive Gear
14	J8126500	1	J						BEARING, Differential, Consists of 2 Bearings and 2 Cups
15									SHIM, Differential Bearing, Replacement Individual DIFFERENTIAL Shims for Master Kit 5017134AA
	05017218AA	1	J						[.109]
	05017219AA	1	J						[.110]
	05017220AA	1	J						[.111]
	05017221AA	1	J						[.112]
	05017222AA	1	J						[.113]
	05017223AA	1	J						[.114]
	05017224AA	1	J						[.115]
	05017225AA	1	J						[.116]
	05017226AA	1	J						[.117]
	05017227AA	1	J						[.118]
	05017228AA	1	J						[.119]
	05017229AA	1	J						[.120]
	05017230AA	1	J						[.121]
	05017231AA	1	J						[.122]
	05017232AA	1	J						[.123]
	05017233AA	1	J						[.124]
	05017234AA	1	J						[.125]
	05017235AA	1	J						[.126]
	05017236AA	1	J						[.127]
	05017237AA	1	J						[.128]
	05017238AA	1	J						[.129]
	05017239AA	1	J						[.130]

GRAND CHEROKEE (WJ)

SERIES	LINE	BODY	ENGINE	TRANSMISSION
H = Laredo	T = JEEP - 2WD	74 = SPORT UTILITY 4-DR	ERH = Engine - 4.0L Power Tech I-6	DGK = 4 Speed Auto, 42RE
M = Sport	J = JEEP - 4WD		EVA = Engine- 4.7L V8 MPI	DGQ = 5 Speed Auto, 45RFE
P = Limited	U = JEEP - 4WD (RHD)		EVC = Engine - 4.7L HO V8 MPI	DG0 = All Automatic Transmissions
S = Overland			ER0 = All 4.0L 6 Cyl. Gas	
			EV0 = All 4.7L Gas	

Differential, Front Axle
Figure 2-610

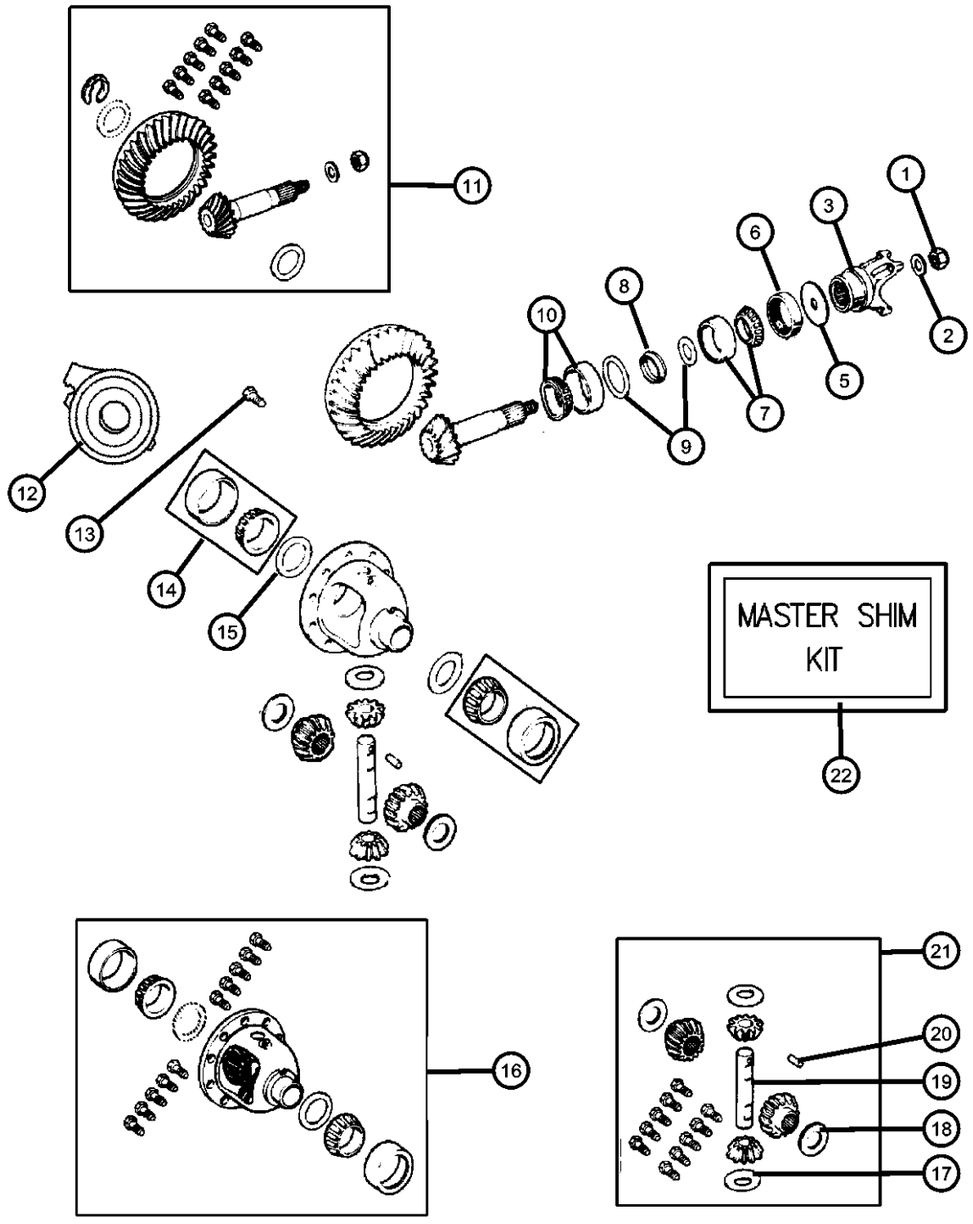

ITEM	PART NUMBER	QTY	LINE	SERIES	BODY	ENGINE	TRANS	TRIM	DESCRIPTION
	05017240AA	1	J						[.131]
	05017241AA	1	J						[.132]
	05017242AA	1	J						[.133]
	05017243AA	1	J						[.134]
	05017244AA	1	J						[.135]
	05017245AA	1	J						[.136]
	05017246AA	1	J						[.137]
	05017247AA	1	J						[.138]
	05017248AA	1	J						[.139]
	05017249AA	1	J						[.140]
	05017250AA	1	J						[.141]
	05017251AA	1	J						[.142]
	05017252AA	1	J						[.143]
	05017253AA	1	J						[.144]
	05017254AA	1	J						[.145]
	05017255AA	1	J						[.146]
	05017256AA	1	J						[.147]
	05017257AA	1	J						[.148]
16									CASE, Differential
	05012477AA	1	J						[DMD,DHF,DHP] Includes Items 14,21
	05012519AA	1	J						[DME,DHF,DSB] With Internal Parts,Without Item 14
	05252590	1	J						[DME,DHF,DHP] Includes Items 14,21
17	J8120831	2	J						WASHER, Pinion Gear, Pinion Gear-Without [DSB], Thrust
18	J8133724	2	J						WASHER, Side Gear, Side Gear-without [DSB], Thrust
19	05003840AA	1	J						SHAFT, Differential, Without [DSB]
20	01791563	1	J						PIN, Differential Shaft, Without [DSB]
21	05252591	1	J						GEAR KIT, Center Differential, Without [DSB]
22	05017134AA	1	J						SHIM KIT, Differential, Master Shim Kit for the Complete Differential including All PINION Shims and all DIFFERENTIAL Shims.

GRAND CHEROKEE (WJ)

SERIES	LINE	BODY	ENGINE	TRANSMISSION
H = Laredo M = Sport P = Limited S = Overland	T = JEEP - 2WD J = JEEP - 4WD U = JEEP - 4WD (RHD)	74 = SPORT UTILITY 4-DR	ERH = Engine - 4.0L Power Tech I-6 EVA = Engine- 4.7L V8 MPI EVC = Engine - 4.7L HO V8 MPI ER0 = All 4.0L 6 Cyl. Gas EV0 = All 4.7L Gas	DGK = 4 Speed Auto, 42RE DGQ = 5 Speed Auto, 45RFE DG0 = All Automatic Transmissions

Skid Plate, Front Axle
Figure 2-810

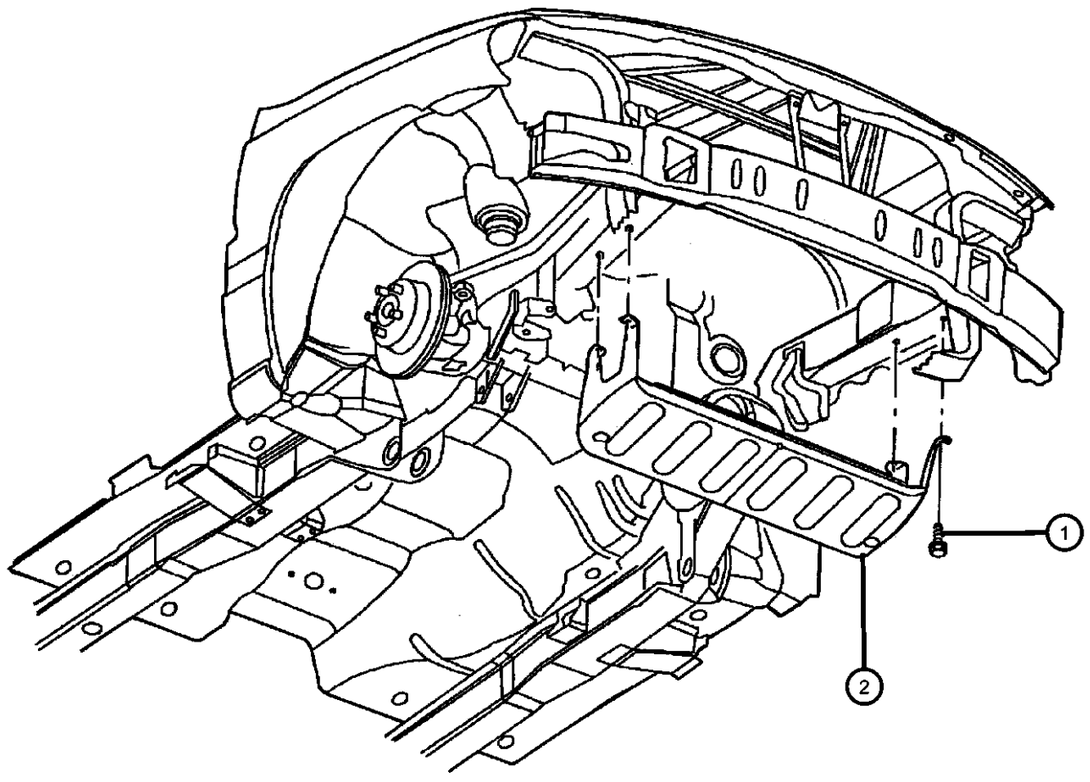

ITEM	PART NUMBER	QTY	LINE	SERIES	BODY	ENGINE	TRANS	TRIM	DESCRIPTION
Note:Sales Codes; [ER0]=Engines - All 4.0L 6 Cylinder Gas [EV0]=Engines - All 4.7L Gas									
1	06505961AA	4	J						SCREW AND WASHER, Hex Head, M10x1.5x40, Skid Plate to Sill
2	52080217AA	1	J			ER0, EV0			SKID PLATE, Front

GRAND CHEROKEE (WJ)

SERIES	LINE	BODY	ENGINE	TRANSMISSION
H = Laredo M = Sport P = Limited S = Overland	T = JEEP - 2WD J = JEEP - 4WD U = JEEP - 4WD (RHD)	74 = SPORT UTILITY 4-DR	ERH = Engine - 4.0L Power Tech I-6 EVA = Engine- 4.7L V8 MPI EVC = Engine - 4.7L HO V8 MPI ER0 = All 4.0L 6 Cyl. Gas EV0 = All 4.7L Gas	DGK = 4 Speed Auto, 42RE DGQ = 5 Speed Auto, 45RFE DG0 = All Automatic Transmissions

Group - 3

Rear Axle

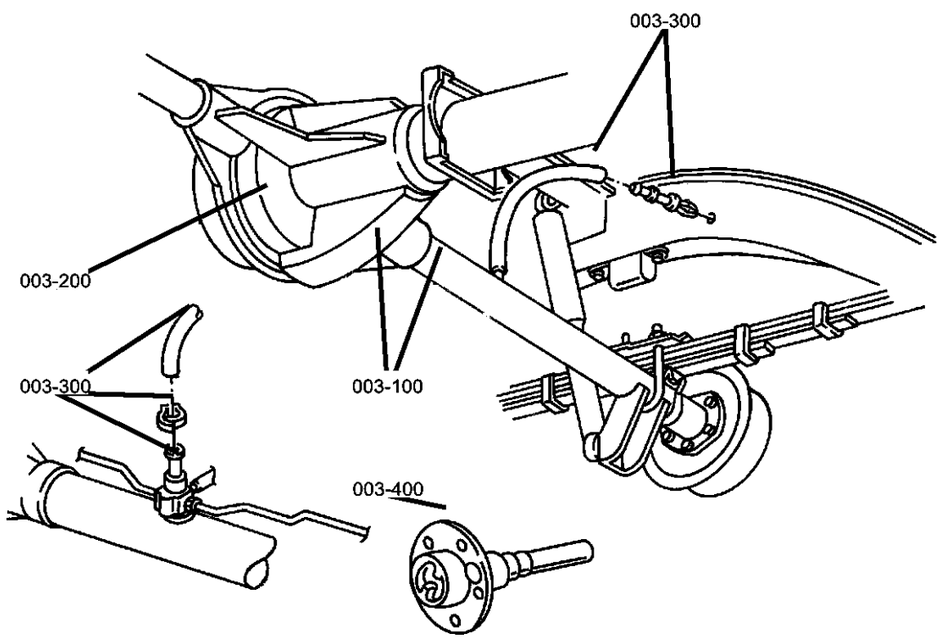

003-100 Rear Axle	003-200 Differential and Housing	003-300 Rear Axle Vent	003-400 Rear Axle Shafts
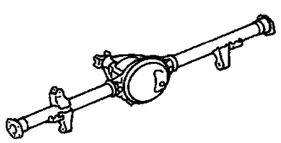	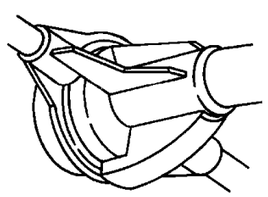	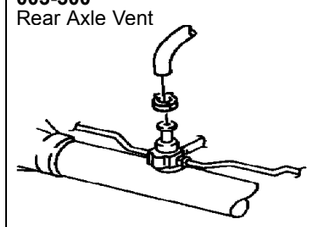	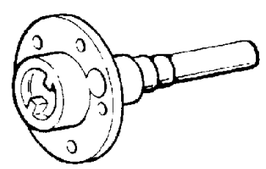

Group - 3 Rear Axle

Illustration Title — Group-Fig. No.

Rear Axle
Axle Assembly,Rear ..... Fig. 3 - 110

Differential and Housing
Housing,Rear Axle,Dana 35C/194MM [DRM] ..... Fig. 3 - 210
Housing,Rear Axle,Dana 44/226MM [DRK] ..... Fig. 3 - 220
Differential,Dana 35C/194MM [DRM] ..... Fig. 3 - 230
Differential,Without Vari-Lok Progressive [DSC],Dana 44/226MM [DRK] ..... Fig. 3 - 240
Differential,With Vari-Lok Progressive [DSC],Dana 44/226MM [DRK] ..... Fig. 3 - 250

Rear Axle Vent
Rear Axle Vent ..... Fig. 3 - 310

Rear Axle Shafts
Shaft,Rear Axle ..... Fig. 3 - 410

Axle Assembly,Rear
Figure 3-110

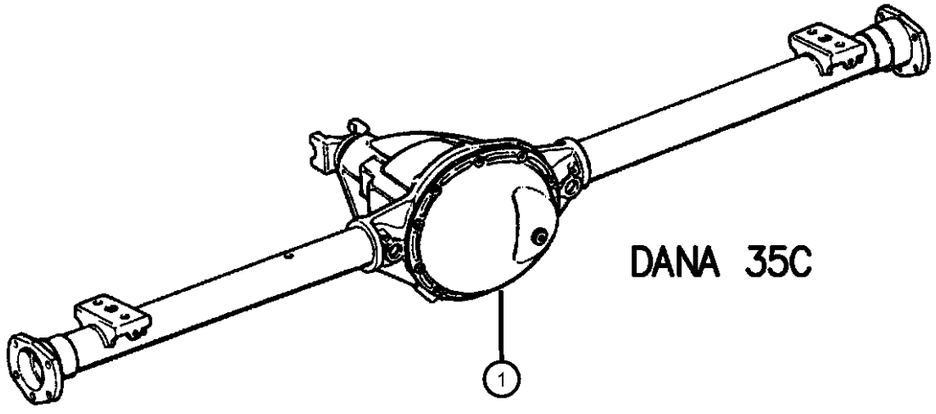

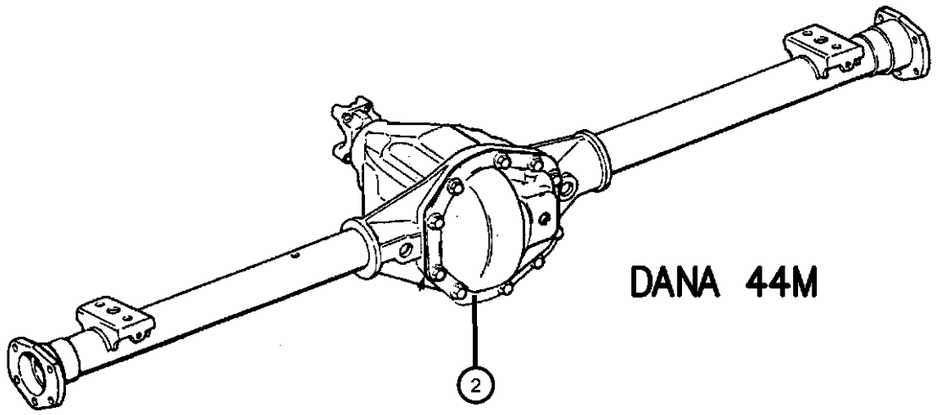

ITEM	PART NUMBER	QTY	LINE	SERIES	BODY	ENGINE	TRANS	TRIM	DESCRIPTION
Note:Sales Codes;									
[DMD]=Axle Ratio - 3.55									
[DME]=Axle Ratio - 3.73									
[DRK]=Axle - Rear,Dana 44/226MM									
[DRM]=Axle - Rear,Dana 35C/194MM									
[DSA]=Axle - Trac-Lok Differential									
[DSC]=Axles - Vari-Lok Progressive									
1									AXLE, Service Rear
	05072213AA	1							[DMD] Tag# 52099433AE
	04874468								Mopar SAE 80W-90 Gear Lube Quart Bottle
	68003054AA								Mopar SAE 80W-90 Gear Lube 16 Gallon Keg
	04874469								Mopar SAE 75W-140 Synthetic Gear and Axle Lube Quart
	68003055AA								Mopar SAE 75W-140 Synthetic Gear and Axle Lube 16 Gallon Keg
	05072222AA	1							[DME] Tag# 52099430AE
	04874468								Mopar SAE 80W-90 Gear Lube Quart Bottle
	68003054AA								Mopar SAE 80W-90 Gear Lube 16 Gallon Keg
	04874469								Mopar SAE 75W-140 Synthetic Gear and Axle Lube Quart
	68003055AA								Mopar SAE 75W-140 Synthetic Gear and Axle Lube 16 Gallon Keg
2									AXLE, Service Rear
	05012843AC	1							[DME] Tag# 52099429AE
	04874468								Mopar SAE 80W-90 Gear Lube Quart Bottle
	68003054AA								Mopar SAE 80W-90 Gear Lube 16 Gallon Keg
	04874469								Mopar SAE 75W-140 Synthetic Gear and Axle Lube Quart
	68003055AA								Mopar SAE 75W-140 Synthetic Gear and Axle Lube 16 Gallon Keg
	05012868AC	1							[DME,DSC] Tag# 52099426AE
	04874468								Mopar SAE 80W-90 Gear Lube Quart Bottle
	68003054AA								Mopar SAE 80W-90 Gear Lube 16 Gallon Keg

GRAND CHEROKEE (WJ)

SERIES	LINE	BODY	ENGINE	TRANSMISSION
H = Laredo	T = JEEP - 2WD	74 = SPORT UTILITY 4-DR	ERH = Engine - 4.0L Power Tech I-6	DGK = 4 Speed Auto, 42RE
M = Sport	J = JEEP - 4WD		EVA = Engine- 4.7L V8 MPI	DGQ = 5 Speed Auto, 45RFE
P = Limited	U = JEEP - 4WD (RHD)		EVC = Engine - 4.7L HO V8 MPI	DG0 = All Automatic Transmissions
S = Overland			ER0 = All 4.0L 6 Cyl. Gas	
			EV0 = All 4.7L Gas	

Axle Assembly,Rear
Figure 3-110

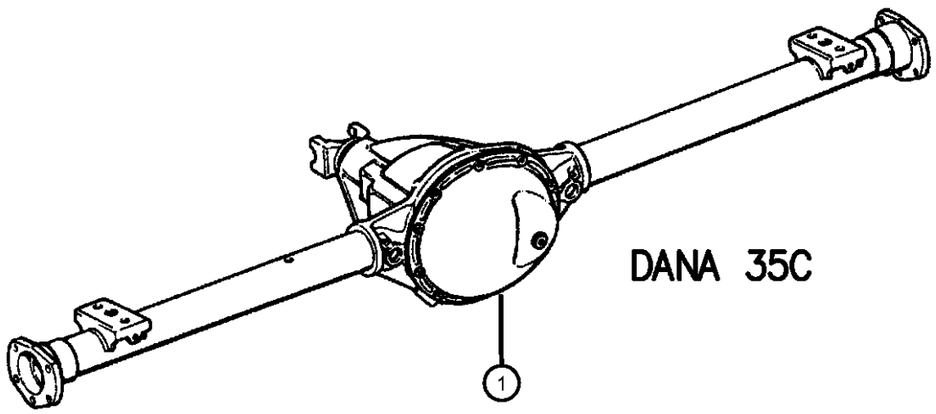

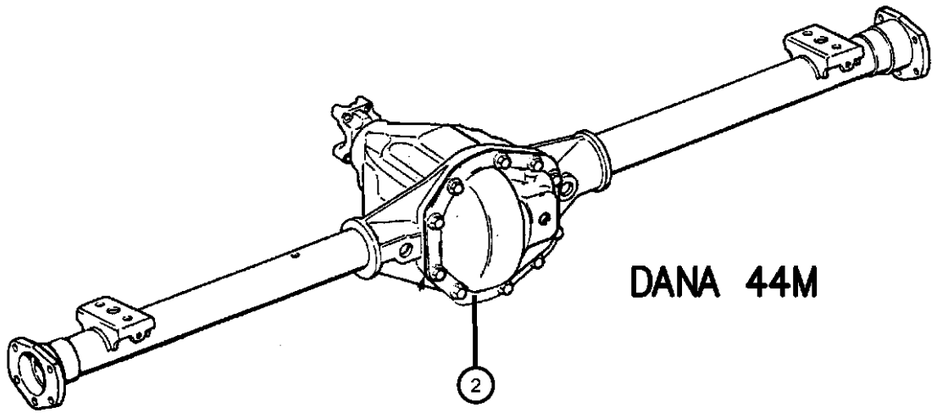

ITEM	PART NUMBER	QTY	LINE	SERIES	BODY	ENGINE	TRANS	TRIM	DESCRIPTION
	04874469								Mopar SAE 75W-140 Synthetic Gear and Axle Lube Quart
	68003055AA								Mopar SAE 75W-140 Synthetic Gear and Axle Lube 16 Gallon Keg

GRAND CHEROKEE (WJ)

SERIES	LINE	BODY	ENGINE	TRANSMISSION
H = Laredo M = Sport P = Limited S = Overland	T = JEEP - 2WD J = JEEP - 4WD U = JEEP - 4WD (RHD)	74 = SPORT UTILITY 4-DR	ERH = Engine - 4.0L Power Tech I-6 EVA = Engine- 4.7L V8 MPI EVC = Engine - 4.7L HO V8 MPI ER0 = All 4.0L 6 Cyl. Gas EV0 = All 4.7L Gas	DGK = 4 Speed Auto, 42RE DGQ = 5 Speed Auto, 45RFE DG0 = All Automatic Transmissions

AR = use ase required - = Non illustrrated part

Housing,Rear Axle,Dana 35C/194MM [DRM]
Figure 3-210

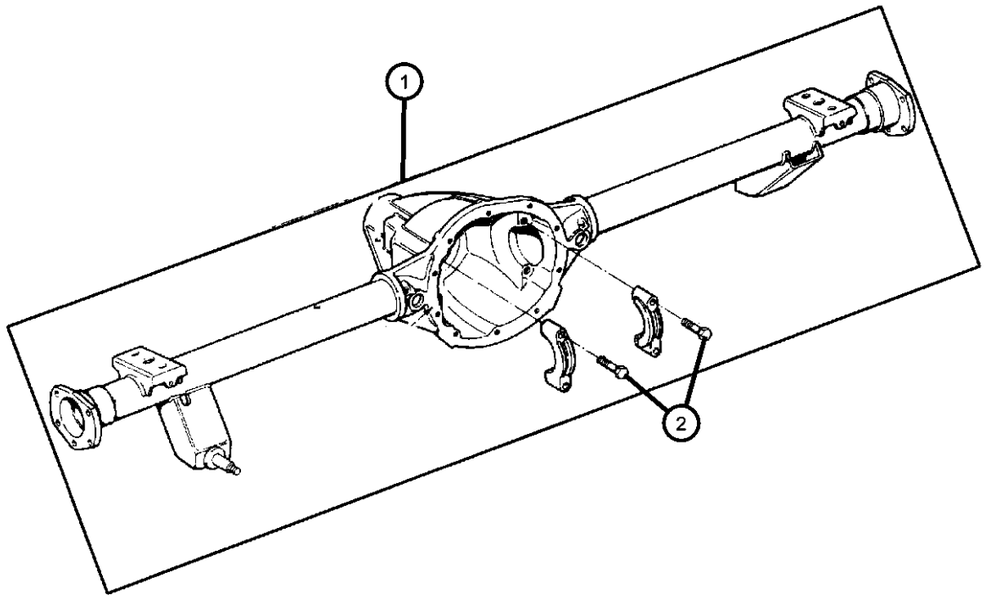

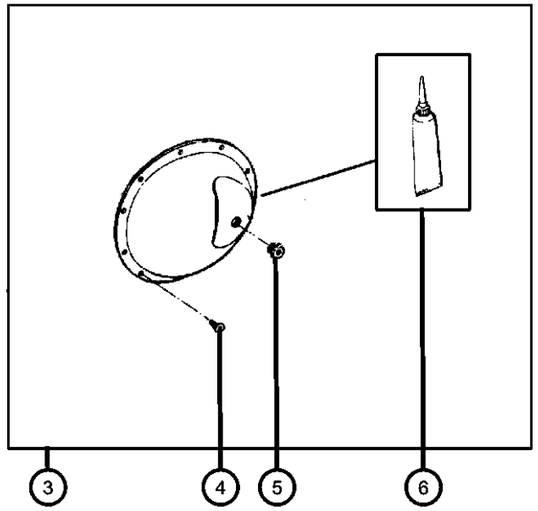

ITEM	PART NUMBER	QTY	LINE	SERIES	BODY	ENGINE	TRANS	TRIM	DESCRIPTION

Note:Sales Codes;
[DRM]=Axle - Rear,Dana 35C/194MM

1	05012805AA	1	HOUSING, Axle
2	04897482AB	4	BOLT, Differential
3	05012811AA	1	COVER, Differential
4	J4006708	10	SCREW, Pan Head, .312-18x.56
5	05252504AB	1	PLUG, Differential Cover
6	05010884AA	1	SEALANT, RTV

GRAND CHEROKEE (WJ)

SERIES	LINE	BODY	ENGINE	TRANSMISSION
H = Laredo M = Sport P = Limited S = Overland	T = JEEP - 2WD J = JEEP - 4WD U = JEEP - 4WD (RHD)	74 = SPORT UTILITY 4-DR	ERH = Engine - 4.0L Power Tech I-6 EVA = Engine- 4.7L V8 MPI EVC = Engine - 4.7L HO V8 MPI ER0 = All 4.0L 6 Cyl. Gas EV0 = All 4.7L Gas	DGK = 4 Speed Auto, 42RE DGQ = 5 Speed Auto, 45RFE DG0 = All Automatic Transmissions

Housing,Rear Axle,Dana 44/226MM [DRK]
Figure 3-220

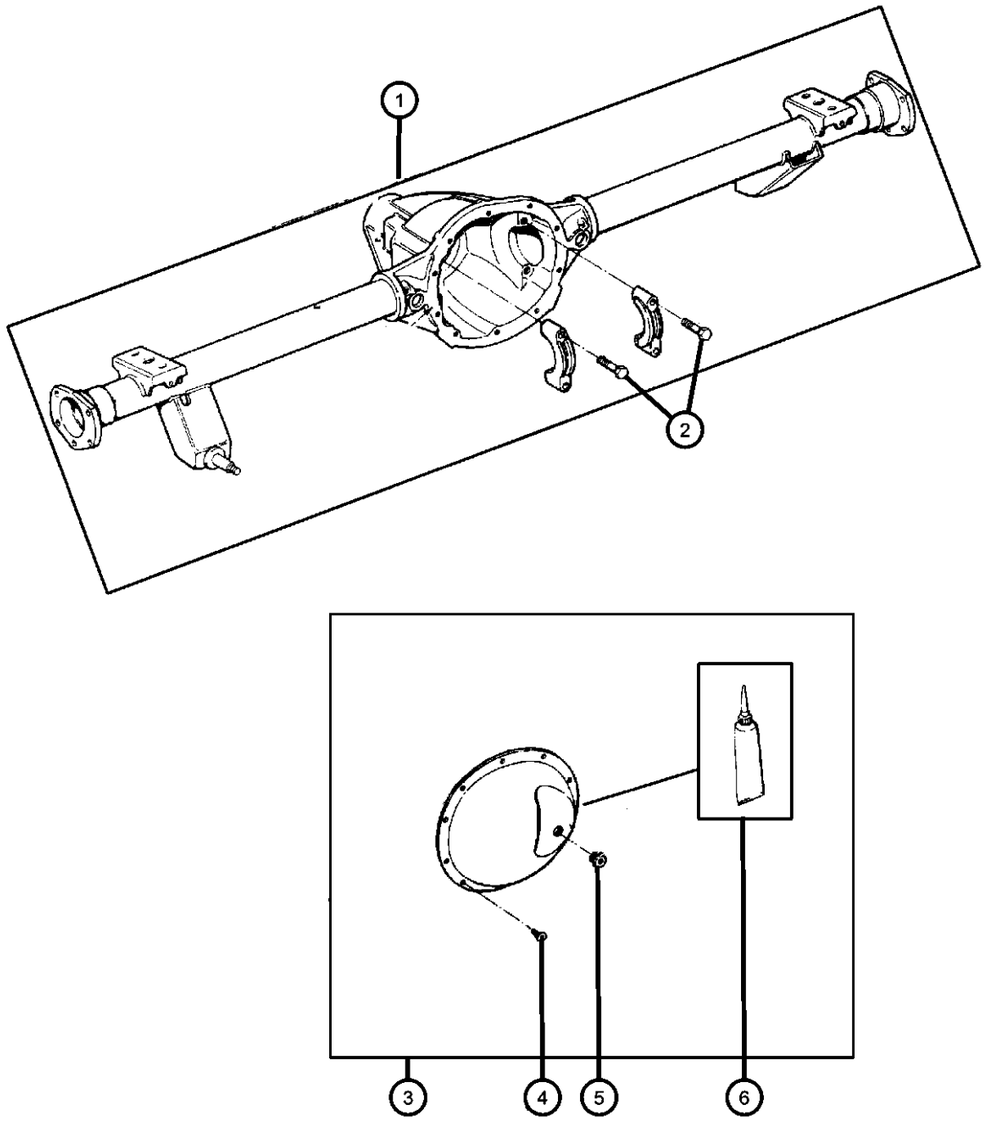

ITEM	PART NUMBER	QTY	LINE	SERIES	BODY	ENGINE	TRANS	TRIM	DESCRIPTION
Note:Sales Codes; [DRK]=Axle - Rear,Dana 44/226MM									
1	05012837AB	1							HOUSING, Axle
2	05012879AA	4							BOLT, Differential
3	05012842AA	1							COVER, Differential
4	J4006708	10							SCREW, Pan Head, .312-18x.56
5	05252504AB	1							PLUG, Differential Cover
6	05010884AA	1							SEALANT, RTV

GRAND CHEROKEE (WJ)

SERIES	LINE	BODY	ENGINE	TRANSMISSION
H = Laredo M = Sport P = Limited S = Overland	T = JEEP - 2WD J = JEEP - 4WD U = JEEP - 4WD (RHD)	74 = SPORT UTILITY 4-DR	ERH = Engine - 4.0L Power Tech I-6 EVA = Engine- 4.7L V8 MPI EVC = Engine - 4.7L HO V8 MPI ER0 = All 4.0L 6 Cyl. Gas EV0 = All 4.7L Gas	DGK = 4 Speed Auto, 42RE DGQ = 5 Speed Auto, 45RFE DG0 = All Automatic Transmissions

Differential,Dana 35C/194MM [DRM]
Figure 3-230

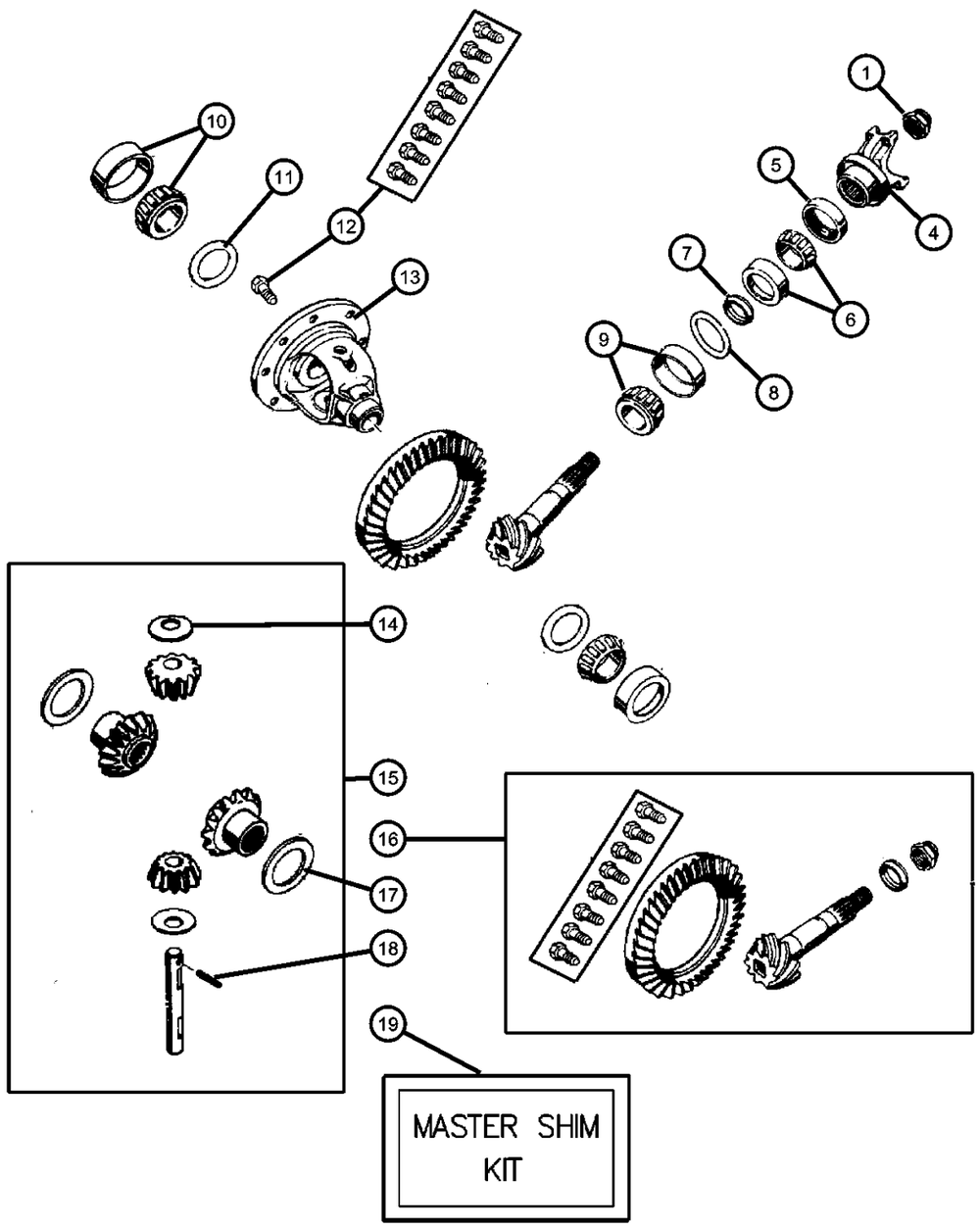

ITEM	PART NUMBER	QTY	LINE	SERIES	BODY	ENGINE	TRANS	TRIM	DESCRIPTION
Note:Sales Codes; [DMD]=Axle Ratio - 3.55 [DME]=Axle Ratio - 3.73 [DRM]=Axle - Rear,Dana 35C/194MM									
1	04720895	1							NUT, Pinion Yoke
-2	04883964AA	1							O RING, Pinion Flange, Fits on Hub of Axle Yoke
-3	05019844AA	1							SLINGER, Drive Pinion
4	05072212AA	1							YOKE, Axle
5	05012813AA	1							SEAL, Drive Pinion
6	05252508	1							BEARING, Drive Pinion, Bearing and Cup, Front
7	05012809AA	1							SPACER, Drive Pinion Bearing, Crush
8									SHIM, Drive Pinion Bearing, Replacement Individual PINION Shims for Master Shim Kit 5017214AA
	05017269AA	1							.036
	05017270AA	1							.037
	05017271AA	1							.038
	05017272AA	1							.039
	05017273AA	1							.040
	05017274AA	1							.041
	05017275AA	1							.042
	05017276AA	1							.043
	05017277AA	1							.044
	05017278AA	1							.045
	05017279AA	1							.046
	05017280AA	1							.047
	05017281AA	1							.048
	05017282AA	1							.049
	05017283AA	1							.050
	05017288AA	1							.021
9	05252507	1							BEARING, Drive Pinion, Bearing and Cup, Rear
10	J8126500	1							BEARING, Differential, Consists of 2 Bearing and 2 Cups

GRAND CHEROKEE (WJ)

SERIES	LINE	BODY	ENGINE	TRANSMISSION
H = Laredo	T = JEEP - 2WD	74 = SPORT UTILITY 4-DR	ERH = Engine - 4.0L Power Tech I-6	DGK = 4 Speed Auto, 42RE
M = Sport	J = JEEP - 4WD		EVA = Engine- 4.7L V8 MPI	DGQ = 5 Speed Auto, 45RFE
P = Limited	U = JEEP - 4WD (RHD)		EVC = Engine - 4.7L HO V8 MPI	DG0 = All Automatic Transmissions
S = Overland			ER0 = All 4.0L 6 Cyl. Gas	
			EV0 = All 4.7L Gas	

Differential,Dana 35C/194MM [DRM]
Figure 3-230

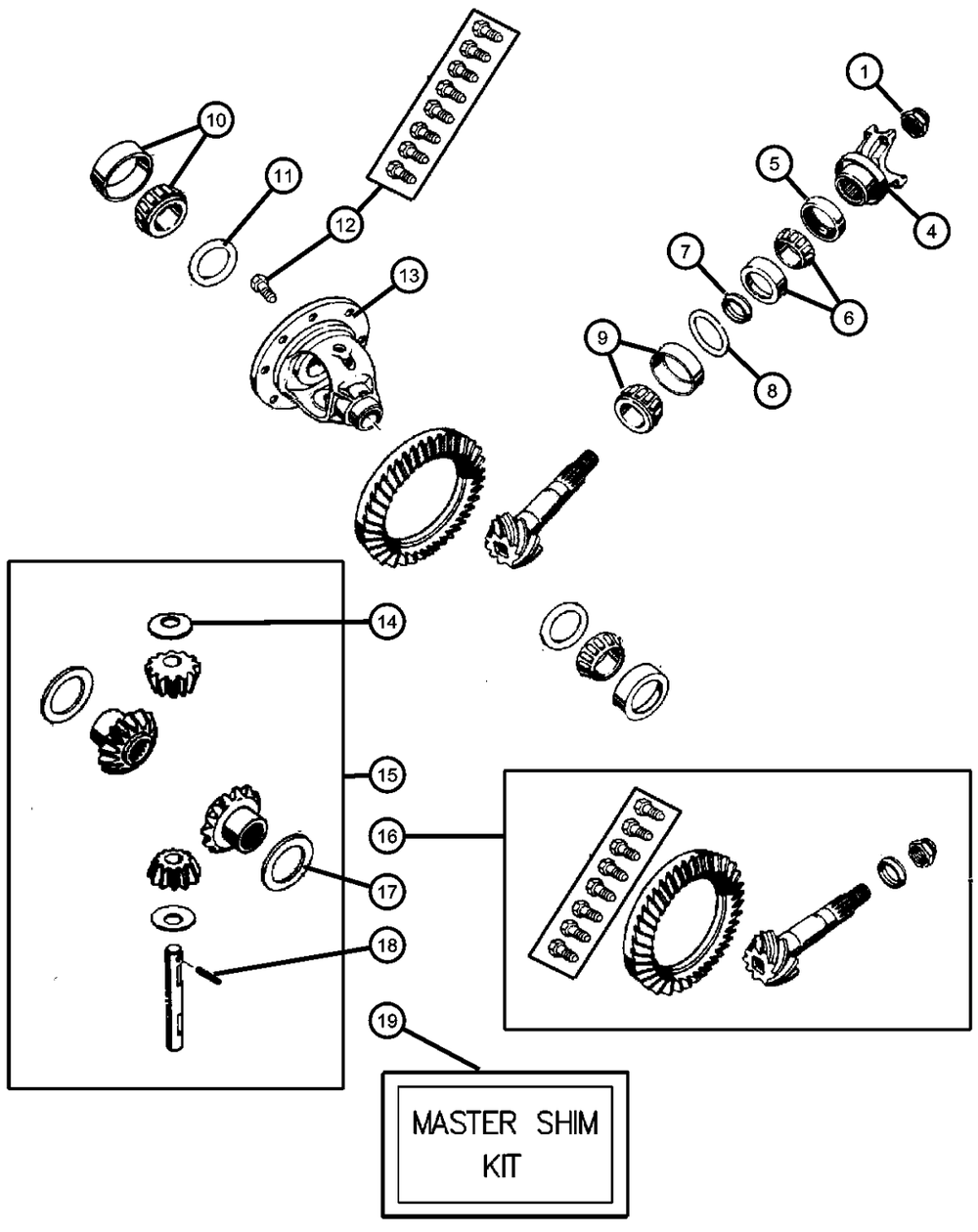

ITEM	PART NUMBER	QTY	LINE	SERIES	BODY	ENGINE	TRANS	TRIM	DESCRIPTION
11									SHIM, Differential Bearing, Replacement Individual DIFFERENTIAL Shims for Master Shim Kit 5017214AA
	05017299AA	1							.151
	05017300AA	1							.152
	05017301AA	1							.153
	05017302AA	1							.154
	05017303AA	1							.155
	05017304AA	1							.156
	05017305AA	1							.157
	05017306AA	1							.158
	05017307AA	1							.159
	05017308AA	1							.160
	05017309AA	1							.161
	05017310AA	1							.162
	05017311AA	1							.163
	05017312AA	1							.164
	05017313AA	1							.165
	05017314AA	1							.166
	05017315AA	1							.167
	05017316AA	1							.168
	05017317AA	1							.169
	05017318AA	1							.170
	05017319AA	1							.171
	05017320AA	1							.172
	05017321AA	1							.173
	05017322AA	1							.174
	05017323AA	1							.175
	05017324AA	1							.176
	05017325AA	1							.177
	05017326AA	1							.178
	05017327AA	1							.179
	05017328AA	1							.180

GRAND CHEROKEE (WJ)

SERIES	LINE	BODY	ENGINE	TRANSMISSION
H = Laredo M = Sport P = Limited S = Overland	T = JEEP - 2WD J = JEEP - 4WD U = JEEP - 4WD (RHD)	74 = SPORT UTILITY 4-DR	ERH = Engine - 4.0L Power Tech I-6 EVA = Engine- 4.7L V8 MPI EVC = Engine - 4.7L HO V8 MPI ER0 = All 4.0L 6 Cyl. Gas EV0 = All 4.7L Gas	DGK = 4 Speed Auto, 42RE DGQ = 5 Speed Auto, 45RFE DG0 = All Automatic Transmissions

Differential,Dana 35C/194MM [DRM]
Figure 3-230

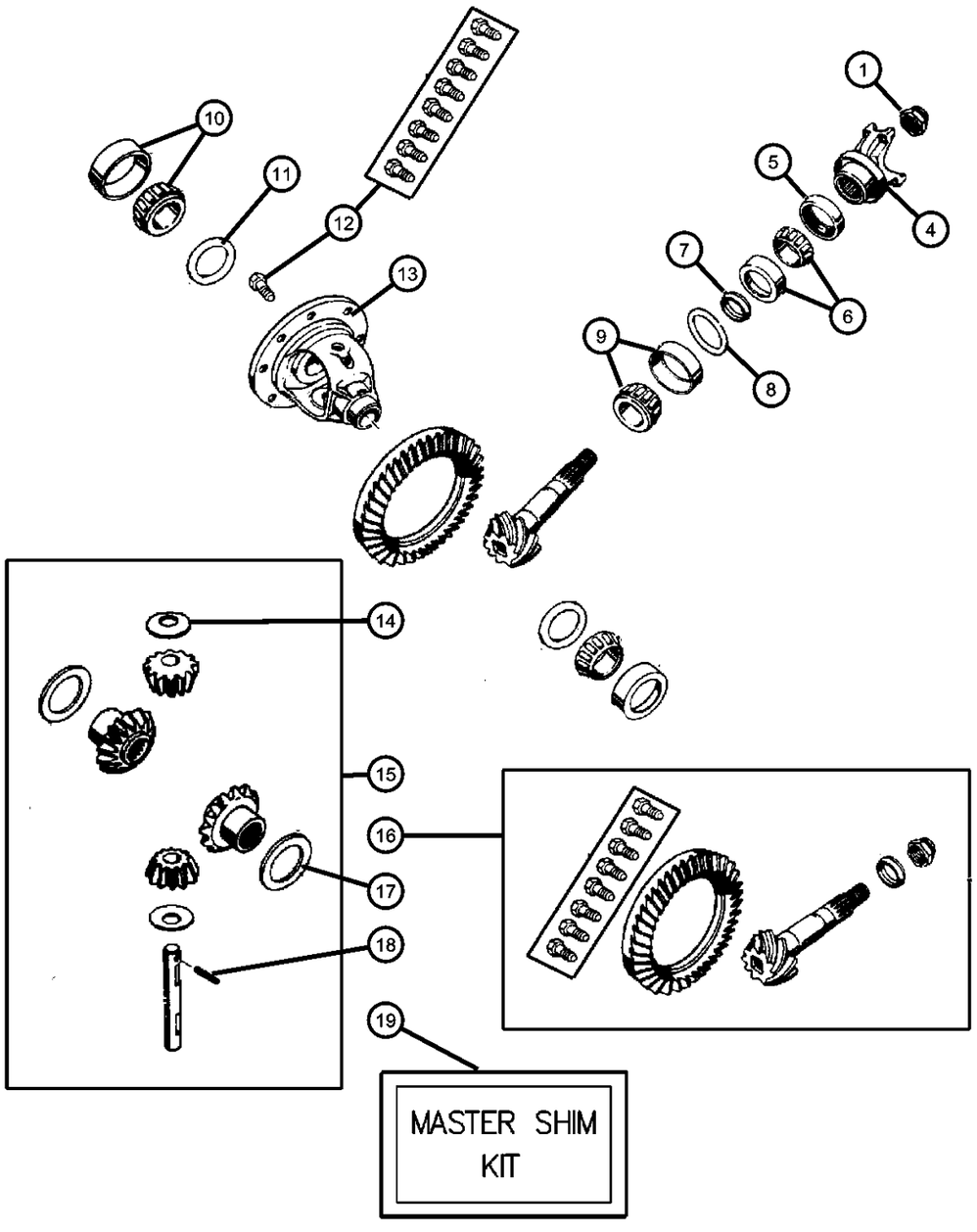

ITEM	PART NUMBER	QTY	LINE	SERIES	BODY	ENGINE	TRANS	TRIM	DESCRIPTION
	05017329AA	1							.181
	05017330AA	1							.182
	05017331AA	1							.183
12	05012810AC	1							BOLT KIT
13	05012808AB	1							CASE, Differential, with Internal Parts
14	J8120831	2							WASHER, Flat, Pinion Thrust
15	04740670	1							GEAR KIT, Center Differential
16									GEAR KIT, Ring And Pinion
	05012807AC	1							[DME]
	05012828AC	1							[DMD]
17	J8120832	1							WASHER, Differential Side Gear, Thrust
18	05252502	1							PIN, Differential Shaft
19	05017214AA	1							SHIM KIT, Differential, Master Shim Kit For the Complete Differential containing 16 PINION Shims and 33 DIFFERENTIAL Shims., Contains All Shims for Differential

GRAND CHEROKEE (WJ)

SERIES	LINE	BODY	ENGINE	TRANSMISSION
H = Laredo M = Sport P = Limited S = Overland	T = JEEP - 2WD J = JEEP - 4WD U = JEEP - 4WD (RHD)	74 = SPORT UTILITY 4-DR	ERH = Engine - 4.0L Power Tech I-6 EVA = Engine- 4.7L V8 MPI EVC = Engine - 4.7L HO V8 MPI ER0 = All 4.0L 6 Cyl. Gas EV0 = All 4.7L Gas	DGK = 4 Speed Auto, 42RE DGQ = 5 Speed Auto, 45RFE DG0 = All Automatic Transmissions

Differential,Without Vari-Lok Progressive [DSC],Dana 44/226MM [DRK]
Figure 3-240

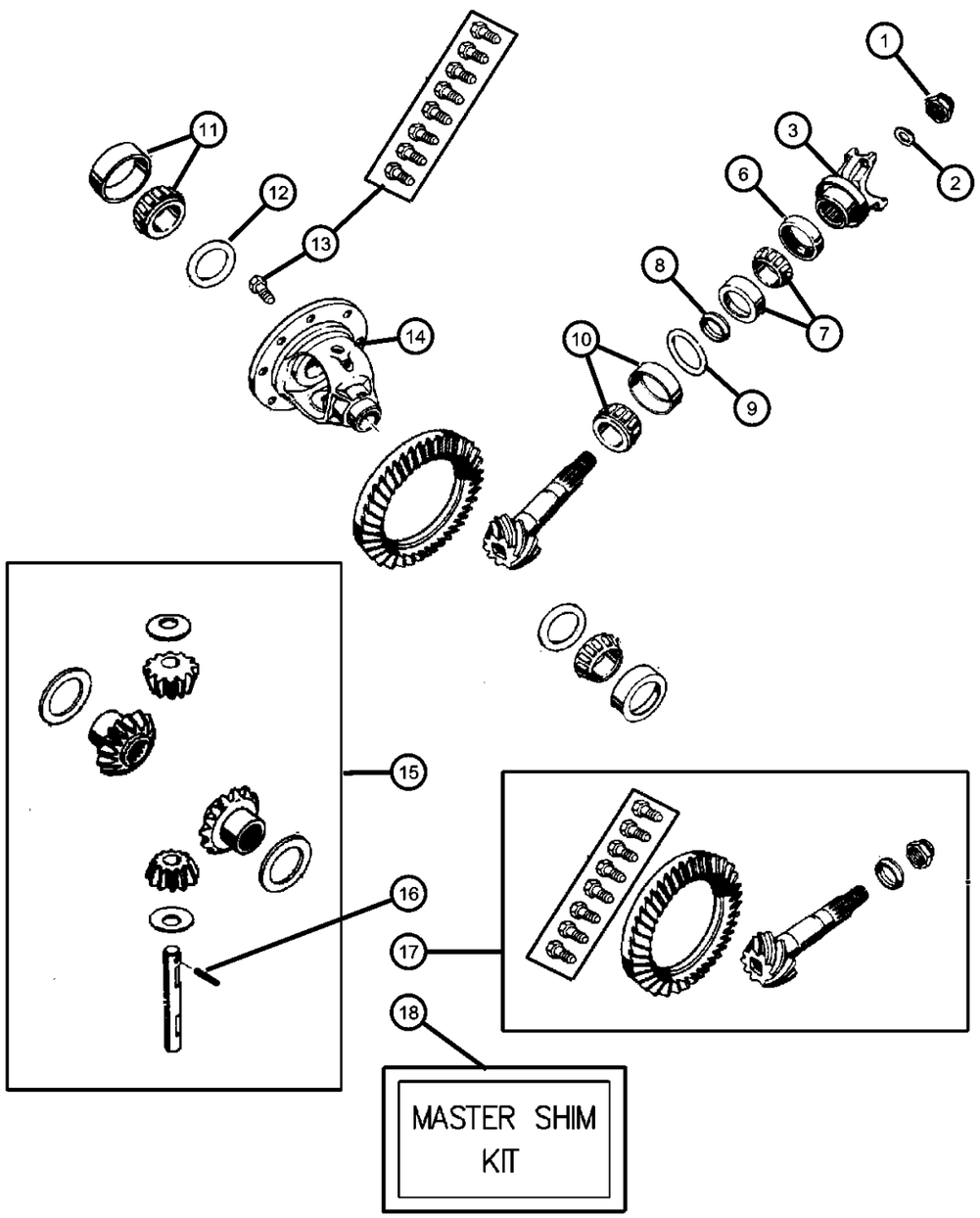

ITEM	PART NUMBER	QTY	LINE	SERIES	BODY	ENGINE	TRANS	TRIM	DESCRIPTION
Note:Sales Codes; [DME]=Axle Ratio - 3.73 [DRK]=Axle - Rear,Dana 44/226MM [DSC]=Axles - Vari-Lok Progressive									
1	01795173	1							NUT, Pinion Yoke
2	01795175	1							WASHER, Pinion Yoke
3	05012840AA	1							YOKE, Axle
-4	04746867	1							SLINGER, Drive Pinion
-5	05012847AA	1							O RING, Pinion Flange, Fits Over Hub of Axle Yoke
6	05072265AA	1							SEAL, Drive Pinion
7	04864210	1							BEARING, Drive Pinion, Bearing and Cup, Front
8	04864214	1							SPACER, Crush
9									SHIM KIT, Pinion Shaft
	04856368	1							.035 to .039
	04856369	1							.040 to .044
	04856370	1							.045 to .049
	04856371	1							.050 to .054
10	04746979	1							BEARING, Drive Pinion, Bearing and Cup, Rear
11	04864213	1							BEARING, Differential Case, Consists of 2 Bearings and 2 Cups
12									SHIM KIT, Differential
	05013879AA	1							.111 to .119
	05013880AA	1							.121 to .125
	05013881AA	1							.126 to .130
	05013882AA	1							.131 to .135
	05013883AA	1							.136 to .140
	05013884AA	1							.141 to .145
	05013885AA	1							.147 to .155
13	05012810AC	1							BOLT KIT
14	05019855AA	1							CASE, Differential, with Internal Parts
15	04856366	1							GEAR KIT, Center Differential
16	05015223AA	1							PIN, Differential Shaft

GRAND CHEROKEE (WJ)

SERIES	LINE	BODY	ENGINE	TRANSMISSION
H = Laredo M = Sport P = Limited S = Overland	T = JEEP - 2WD J = JEEP - 4WD U = JEEP - 4WD (RHD)	74 = SPORT UTILITY 4-DR	ERH = Engine - 4.0L Power Tech I-6 EVA = Engine- 4.7L V8 MPI EVC = Engine - 4.7L HO V8 MPI ER0 = All 4.0L 6 Cyl. Gas EV0 = All 4.7L Gas	DGK = 4 Speed Auto, 42RE DGQ = 5 Speed Auto, 45RFE DG0 = All Automatic Transmissions

Differential,Without Vari-Lok Progressive [DSC],Dana 44/226MM [DRK]
Figure 3-240

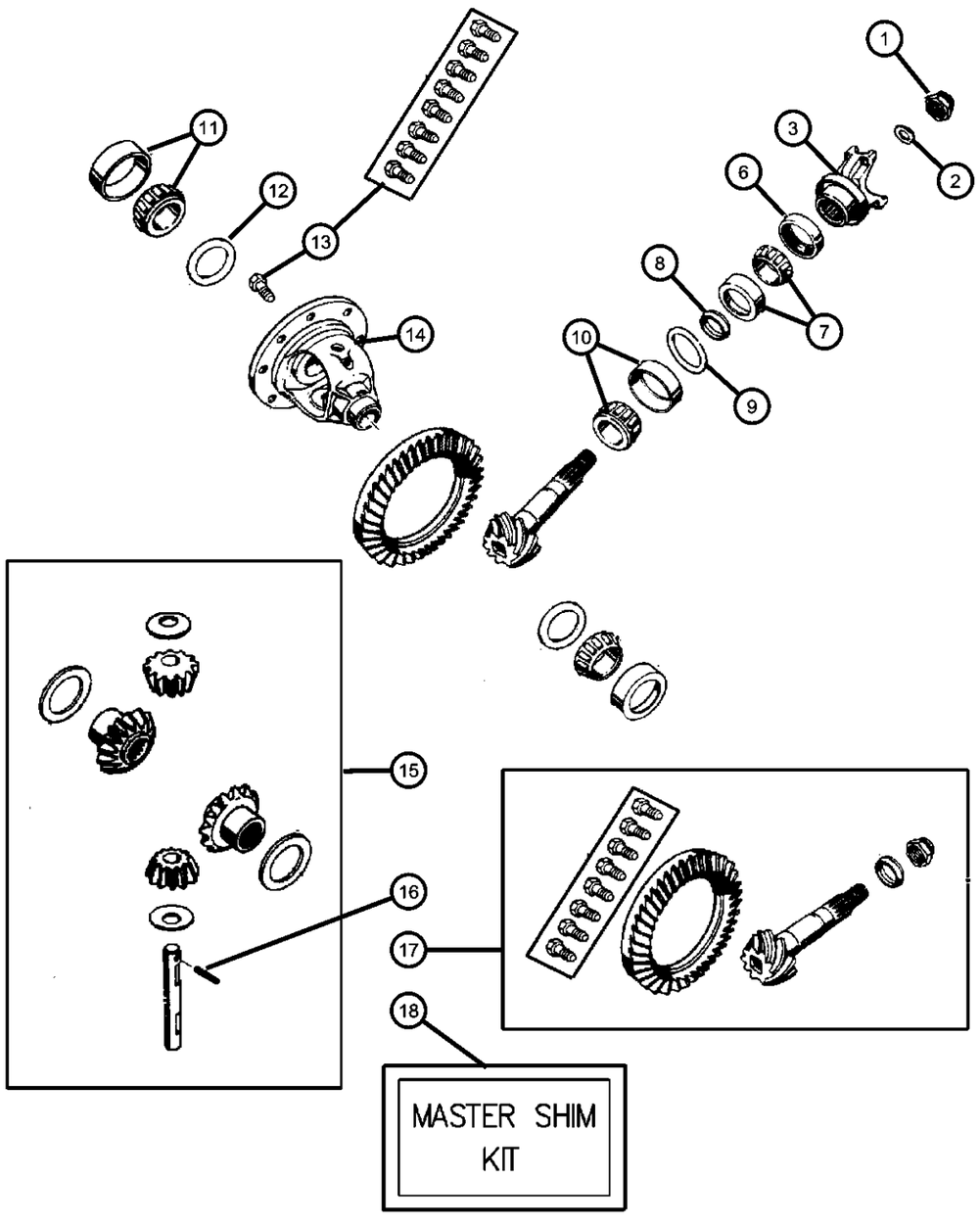

ITEM	PART NUMBER	QTY	LINE	SERIES	BODY	ENGINE	TRANS	TRIM	DESCRIPTION
17	05019854AB	1							GEAR KIT, Ring And Pinion, [DME]
18	05017215AA	1							SHIM KIT, Differential, Contains All Shims for Differential

GRAND CHEROKEE (WJ)

SERIES	LINE	BODY	ENGINE	TRANSMISSION
H = Laredo M = Sport P = Limited S = Overland	T = JEEP - 2WD J = JEEP - 4WD U = JEEP - 4WD (RHD)	74 = SPORT UTILITY 4-DR	ERH = Engine - 4.0L Power Tech I-6 EVA = Engine- 4.7L V8 MPI EVC = Engine - 4.7L HO V8 MPI ER0 = All 4.0L 6 Cyl. Gas EV0 = All 4.7L Gas	DGK = 4 Speed Auto, 42RE DGQ = 5 Speed Auto, 45RFE DG0 = All Automatic Transmissions

Differential,With Vari-Lok Progressive [DSC],Dana 44/226MM [DRK]
Figure 3-250

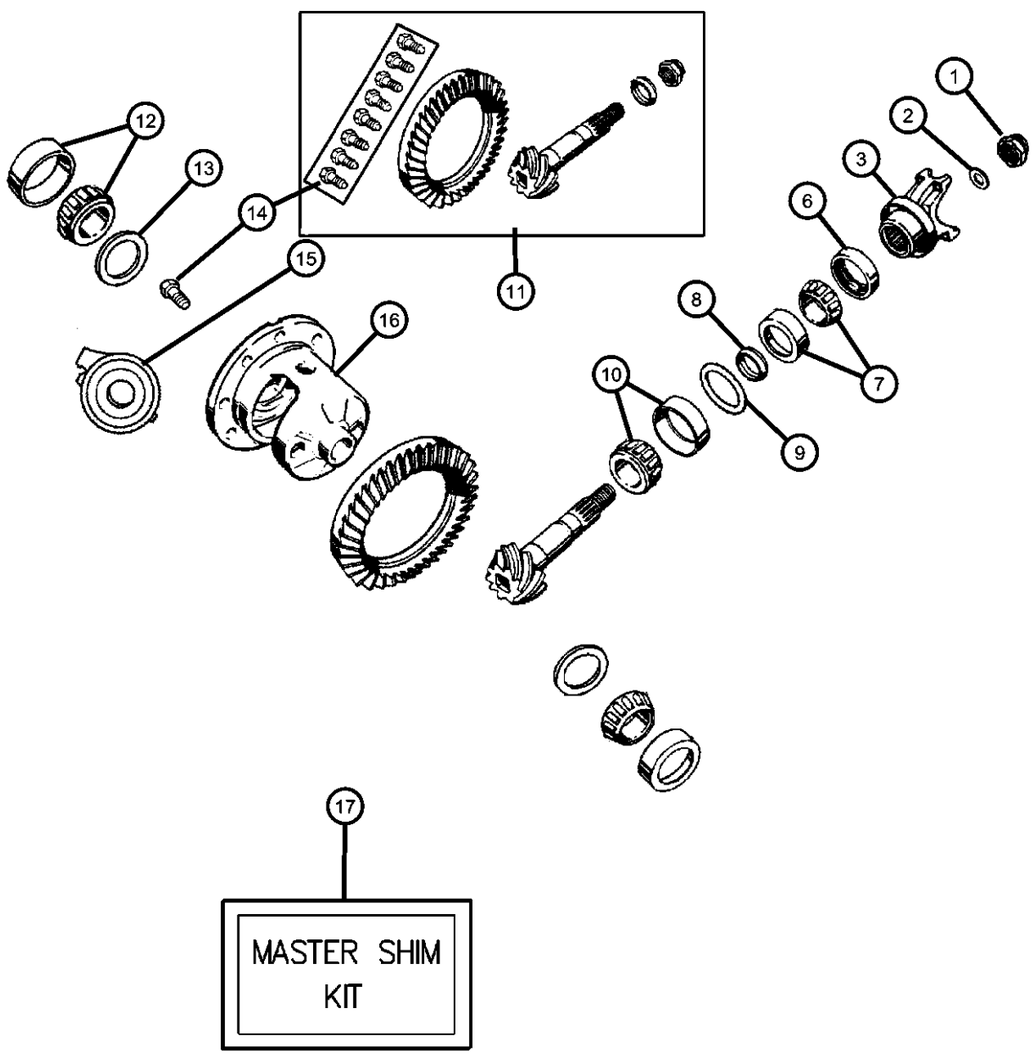

ITEM	PART NUMBER	QTY	LINE	SERIES	BODY	ENGINE	TRANS	TRIM	DESCRIPTION
Note:Sales Codes; [DME]=Axle Ratio - 3.73 [DRK]=Axle - Rear,Dana 44/226MM [DSC]=Axles - Vari-Lok Progressive									
1	01795173	1							NUT, Pinion Yoke
2	01795175	1							WASHER, Pinion Yoke
3	05012840AA	1							YOKE, Axle
-4	04746867	1							SLINGER, Drive Pinion
-5	05012847AA	1							O RING, Pinion Flange, Fits Over Hub of Axle Yoke
6	05072265AA	1							SEAL, Drive Pinion
7	04864210	1							BEARING, Drive Pinion, Bearing and Cup, Front
8	04864214	1							SPACER, Crush
9									SHIM KIT, Pinion Shaft, Replacement Individual PINION Shims for Master Shim Kit 5017215AA.
	04856368	1							.035 to .039
	04856369	1							.040 to .044
	04856370	1							.045 to .049
	04856371	1							.050 to .054
10	04746979	1							BEARING, Drive Pinion, Bearing and Cup, Rear
11	05019854AB	1							GEAR KIT, Ring And Pinion
12	04864213	1							BEARING, Differential Case, Contains 2 Bearings and 2 Cups
13									SHIM KIT, Differential, Replacement Individual DIFFERENTIAL Shims for Master Shim Kit 5017215AA
	05013879AA	1							.111 to .119
	05013880AA	1							.121 to .125
	05013881AA	1							.126 to .130
	05013882AA	1							.131 to .135
	05013883AA	1							.136 to .140
	05013884AA	1							.141 to .145
	05013885AA	1							.147 to .155
14	05012810AC	1							BOLT KIT

GRAND CHEROKEE (WJ)

SERIES	LINE	BODY	ENGINE	TRANSMISSION
H = Laredo M = Sport P = Limited S = Overland	T = JEEP - 2WD J = JEEP - 4WD U = JEEP - 4WD (RHD)	74 = SPORT UTILITY 4-DR	ERH = Engine - 4.0L Power Tech I-6 EVA = Engine- 4.7L V8 MPI EVC = Engine - 4.7L HO V8 MPI ER0 = All 4.0L 6 Cyl. Gas EV0 = All 4.7L Gas	DGK = 4 Speed Auto, 42RE DGQ = 5 Speed Auto, 45RFE DG0 = All Automatic Transmissions

Differential,With Vari-Lok Progressive [DSC],Dana 44/226MM [DRK]
Figure 3-250

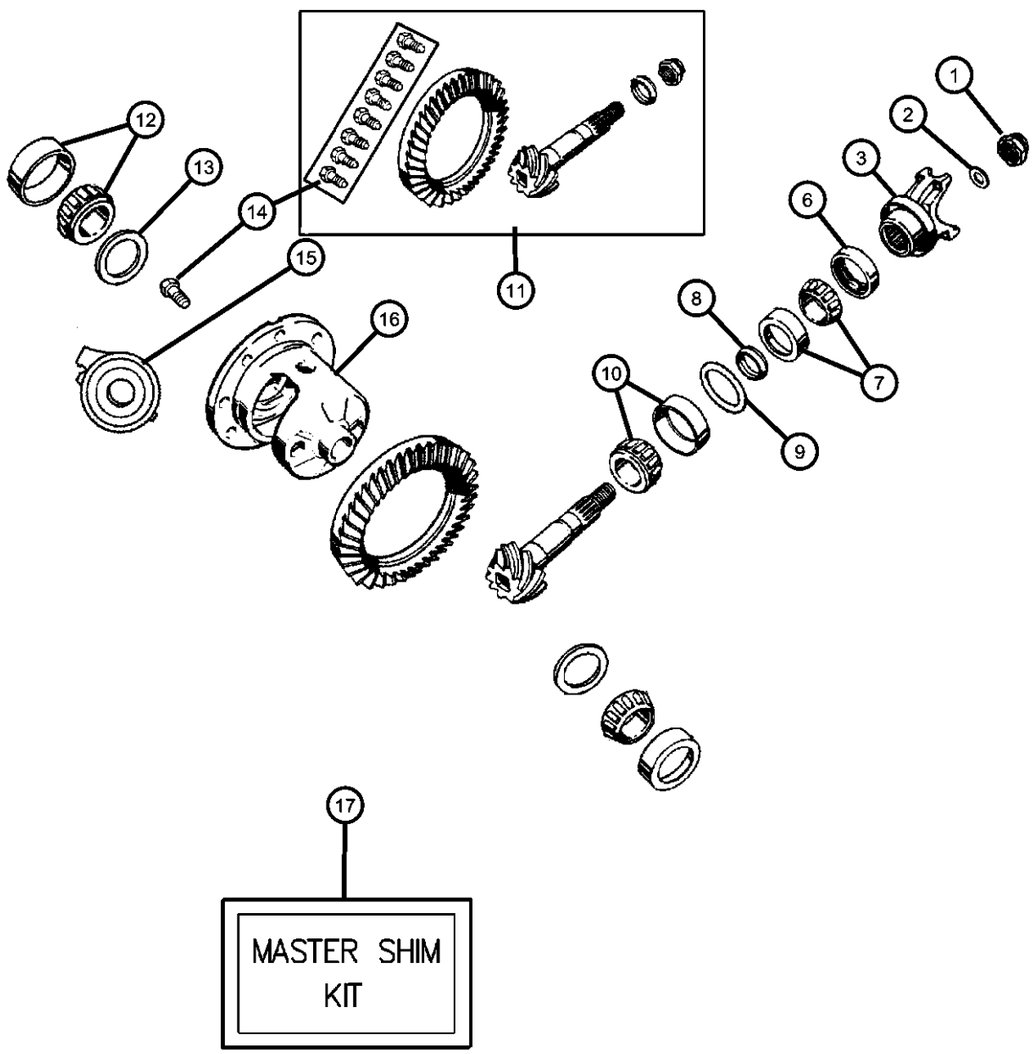

ITEM	PART NUMBER	QTY	LINE	SERIES	BODY	ENGINE	TRANS	TRIM	DESCRIPTION
15	05012870AA	1							PLENUM, Differential
16	05019867AA	1							CASE, Differential, with Internal Parts
17	05017215AA	1							SHIM KIT, Differential, Contains All Shims for Differential

GRAND CHEROKEE (WJ)

SERIES	LINE	BODY	ENGINE	TRANSMISSION
H = Laredo M = Sport P = Limited S = Overland	T = JEEP - 2WD J = JEEP - 4WD U = JEEP - 4WD (RHD)	74 = SPORT UTILITY 4-DR	ERH = Engine - 4.0L Power Tech I-6 EVA = Engine- 4.7L V8 MPI EVC = Engine - 4.7L HO V8 MPI ER0 = All 4.0L 6 Cyl. Gas EV0 = All 4.7L Gas	DGK = 4 Speed Auto, 42RE DGQ = 5 Speed Auto, 45RFE DG0 = All Automatic Transmissions

Rear Axle Vent
Figure 3-310

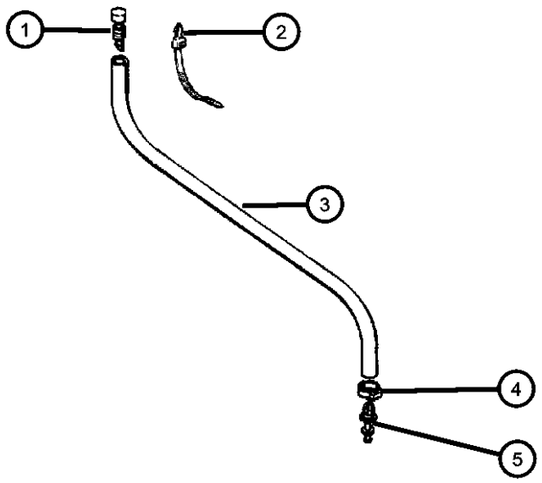

ITEM	PART NUMBER	QTY	LINE	SERIES	BODY	ENGINE	TRANS	TRIM	DESCRIPTION

Note:Sales Codes;
Note: Item 3 Also Includes Vacuum and Jumper Lines For Vapor Canister
[ER0]=Engines - All 4.0L 6 Cylinder Gas
[EVA]=Engine - 4.7L Power Tech V8

1	J5352955	1	VENT, Axle
2	06016076	1	TIE STRAP
3	52098655AC	1	HOSE, Axle Vent, See Note
4	06503573	1	CLIP, Lower Clamp to Screw
5	04137696	1	SCREW, Brake Tee, .437-20x2.07, Double Ended Stud

GRAND CHEROKEE (WJ)

SERIES	LINE	BODY	ENGINE	TRANSMISSION
H = Laredo M = Sport P = Limited S = Overland	T = JEEP - 2WD J = JEEP - 4WD U = JEEP - 4WD (RHD)	74 = SPORT UTILITY 4-DR	ERH = Engine - 4.0L Power Tech I-6 EVA = Engine- 4.7L V8 MPI EVC = Engine - 4.7L HO V8 MPI ER0 = All 4.0L 6 Cyl. Gas EV0 = All 4.7L Gas	DGK = 4 Speed Auto, 42RE DGQ = 5 Speed Auto, 45RFE DG0 = All Automatic Transmissions

Shaft,Rear Axle
Figure 3-410

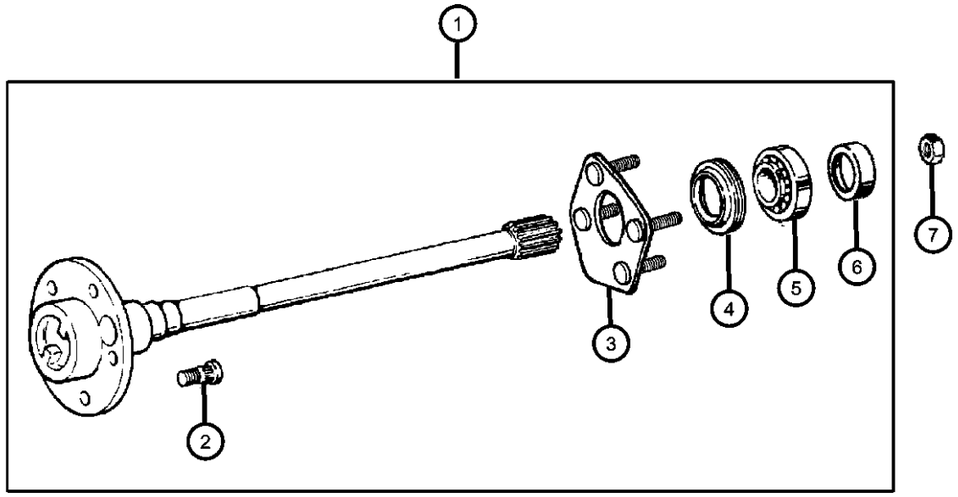

ITEM	PART NUMBER	QTY	LINE	SERIES	BODY	ENGINE	TRANS	TRIM	DESCRIPTION
Note:Sales Codes; [DRK]=Axle - Rear,Dana 44/226MM [DRM]=Axle - Rear,Dana 35C/194MM [DSC]=Axles - Vari-Lok Progressive									
1									SHAFT, Axle
	05012820AA	1							[DRM], Right
	05012821AA	1							[DRM], Left
	05012850AA	1							[DRK], Right
	05012851AA	1							[DRK], Left
	05012872AA	1							[DRK,DSC], Right
	05012873AA	1							[DRK,DSC], Left
2	52098680	5							STUD, WheelMounting
3	05012827AA	1							RETAINER, Axle Shaft Seal
4	05012824AA	1							SEAL, Axle Drive Shaft
5	05012825AA	1							BEARING, Axle Shaft
6	05012826AA	1							RING, Axle Shaft
7	J9411783	8							NUT, Hex Flange Lock, Axle Shaft Seal Retainer, Mounting

GRAND CHEROKEE (WJ)

SERIES	LINE	BODY	ENGINE	TRANSMISSION
H = Laredo M = Sport P = Limited S = Overland	T = JEEP - 2WD J = JEEP - 4WD U = JEEP - 4WD (RHD)	74 = SPORT UTILITY 4-DR	ERH = Engine - 4.0L Power Tech I-6 EVA = Engine- 4.7L V8 MPI EVC = Engine - 4.7L HO V8 MPI ER0 = All 4.0L 6 Cyl. Gas EV0 = All 4.7L Gas	DGK = 4 Speed Auto, 42RE DGQ = 5 Speed Auto, 45RFE DG0 = All Automatic Transmissions

Group - 4

Parking Brake

004-100 Parking Brake Lever and Cables 			

Group - 4 Parking Brake

Illustration Title — Group-Fig. No.

Parking Brake Lever and Cables

Lever and Cable,Parking Brake ..... Fig. 4 - 110
Rear Disc Parking Brake Assembly ..... Fig. 4 - 120

Lever and Cable,Parking Brake
Figure 4-110

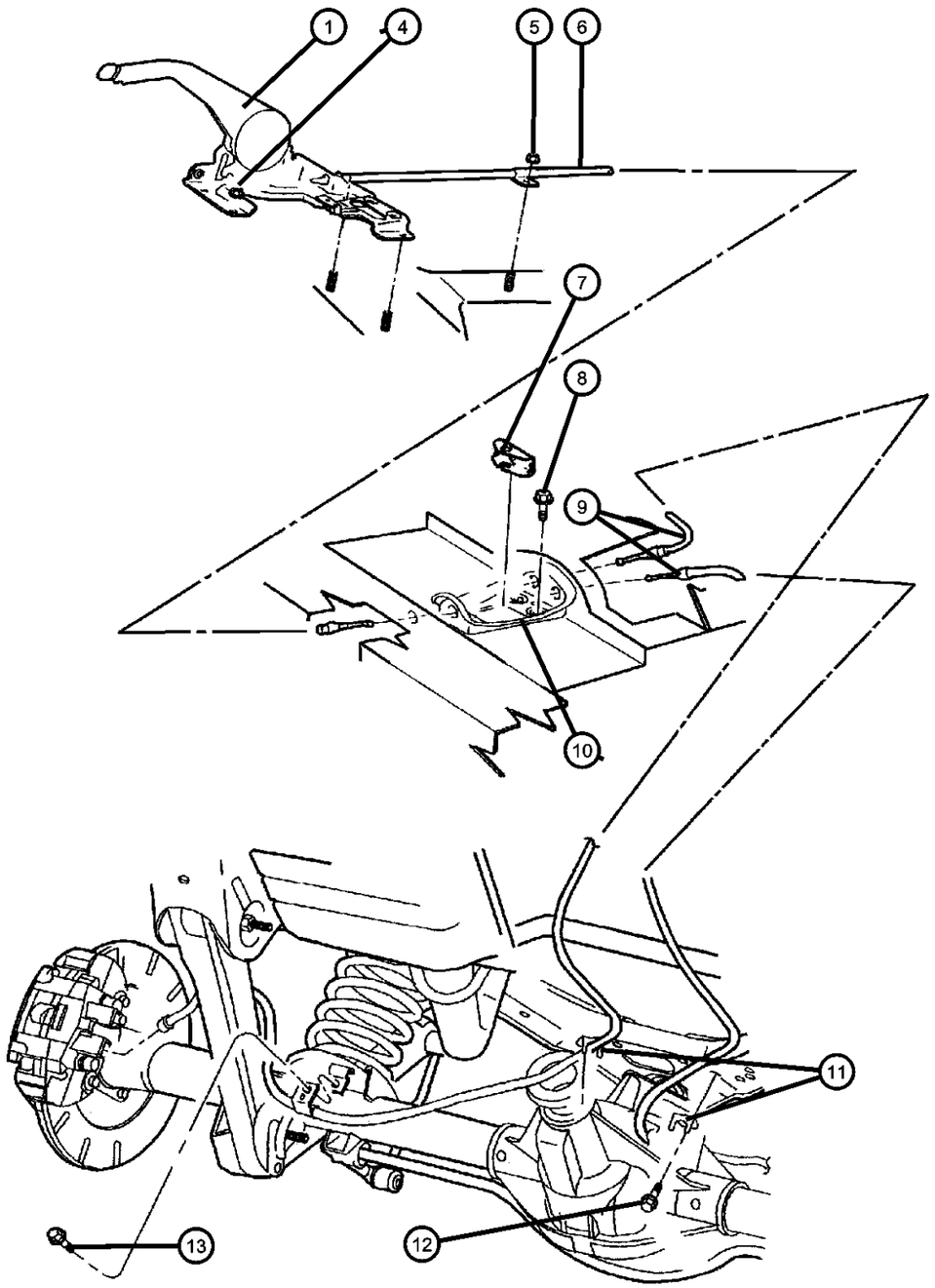

ITEM	PART NUMBER	QTY	LINE	SERIES	BODY	ENGINE	TRANS	TRIM	DESCRIPTION
1	52128246AF	1							LEVER, Park Brake
-2	52127960	1							SWITCH, Parking Brake
-3	05016265AA	1							COVER, Parking Brake
4	06505245AA	4							NUT, M8x1.25, Park Brake Lever Assembly, Mounting
5	06101802	1							NUT, Park Brake Cable, Mounting
6	52128243AA	1							CABLE, Parking BrakeFront
7	52128126	1							EQUALIZER, Parking Brake Cable
8	06502734	3							SCREW, M6x1x20, Cable Bracket, Mounting
9									CABLE, Parking Brake
	52128118AD	1							Right Rear
	52128119AD	1							Left Rear
10	52128236AB	1							BRACKET, Cable, Park Brake Reaction
11	52128224AB	2							BRACKET, Cable, UCA, Mounting
12	06505242AA	2							SCREW, Bracket to UCA, Mounting
13	06505242AA	2							SCREW, Hex Flange Head, M6x1.00x15.00, (NOT SERVICED)

GRAND CHEROKEE (WJ)

SERIES	LINE	BODY	ENGINE	TRANSMISSION
H = Laredo M = Sport P = Limited S = Overland	T = JEEP - 2WD J = JEEP - 4WD U = JEEP - 4WD (RHD)	74 = SPORT UTILITY 4-DR	ERH = Engine - 4.0L Power Tech I-6 EVA = Engine- 4.7L V8 MPI EVC = Engine - 4.7L HO V8 MPI ER0 = All 4.0L 6 Cyl. Gas EV0 = All 4.7L Gas	DGK = 4 Speed Auto, 42RE DGQ = 5 Speed Auto, 45RFE DG0 = All Automatic Transmissions

AR = use ase required - = Non illustrrated part

Rear Disc Parking Brake Assembly
Figure 4-120

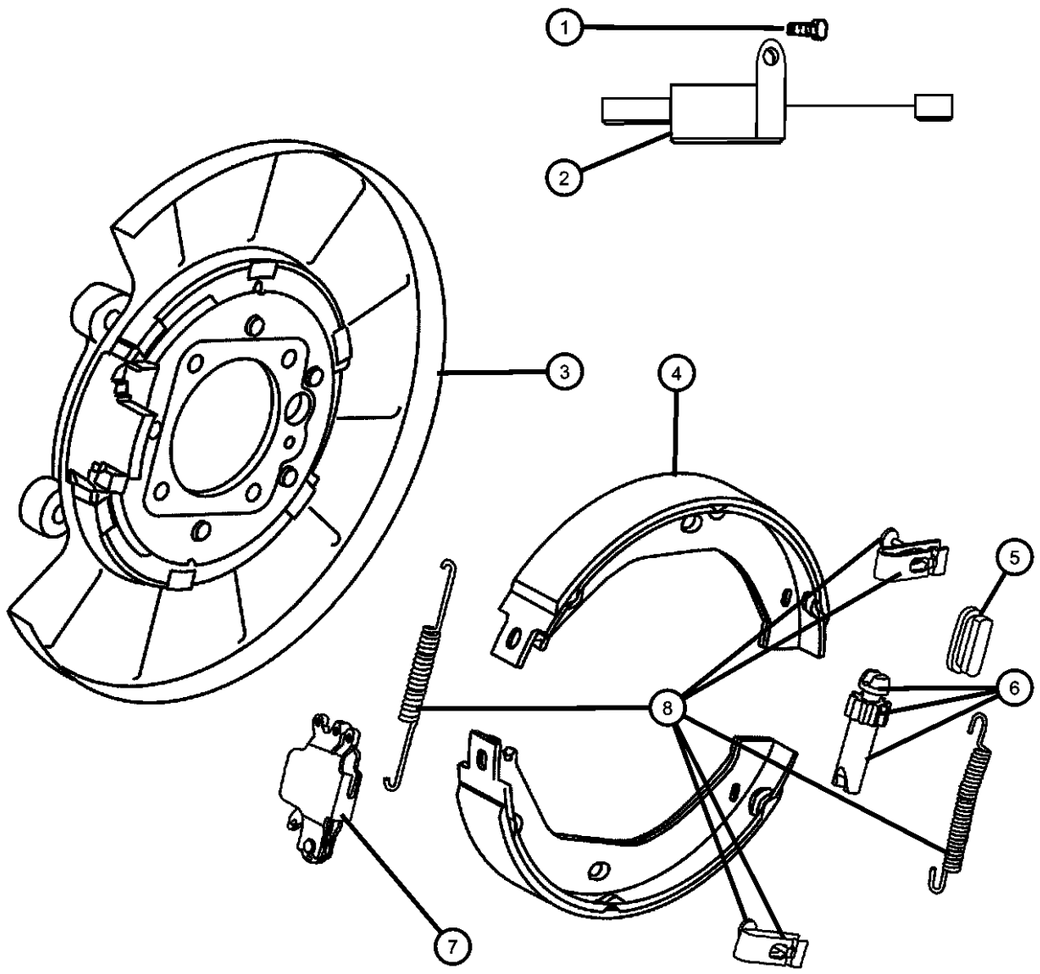

ITEM	PART NUMBER	QTY	LINE	SERIES	BODY	ENGINE	TRANS	TRIM	DESCRIPTION
Note: 5014038AA Spring Kit , contains 2 Brake Shoe Hold Down Pins, 2 Parking Brake Hold Down Clips,1 Park Brake Shoe Return Spring Upper a									
1	05012814AA	2							BOLT, ABS SensorRight or Left
2									SENSOR, Wheel Speed
	56041308AA	1							Right
	56041509AA	1							Left
3	05011982AA	1							PLATE, Brake BackingRight or Left
4	05011988AA	1							SHOE AND LINING KIT, Parking BrakeRight & Left
	BHKP7306								Mopar Parking Brake Hardware Kit
5	05012354AA	1							PLUG, Brake Adjusting HoleRight or Left
6	05011993AA	1							ADJUSTER, Parking BrakeRight or Left
7	05011994AA	1							LEVER, Park BrakeRight or Left
8	05014038AA	1							SPRING KIT, Brake Shoe Hold Down, See Note At Top of Page, Right or Left

GRAND CHEROKEE (WJ)

SERIES	LINE	BODY	ENGINE	TRANSMISSION
H = Laredo	T = JEEP - 2WD	74 = SPORT UTILITY 4-DR	ERH = Engine - 4.0L Power Tech I-6	DGK = 4 Speed Auto, 42RE
M = Sport	J = JEEP - 4WD		EVA = Engine- 4.7L V8 MPI	DGQ = 5 Speed Auto, 45RFE
P = Limited	U = JEEP - 4WD (RHD)		EVC = Engine - 4.7L HO V8 MPI	DG0 = All Automatic Transmissions
S = Overland			ER0 = All 4.0L 6 Cyl. Gas	
			EV0 = All 4.7L Gas	

Group - 5

Service Brakes

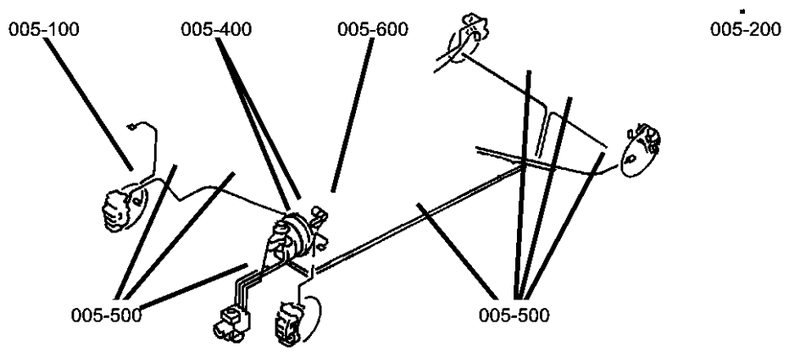

005-100 Front Brakes 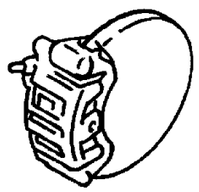	**005-200** Rear Brakes 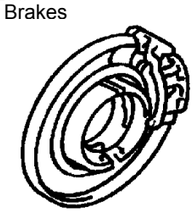	**005-300** Power Brake Booster 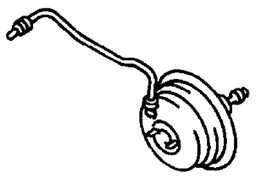	**005-400** Brake Master Cylinder 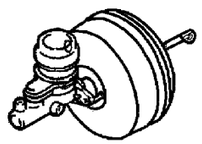
005-500 Brake Lines and Hoses 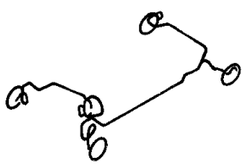	**005-600** Brake Pedals 		

Group - 5 Service Brakes

Illustration Title — Group-Fig. No.

Front Brakes
Front Disc Brake Caliper ‘Continental Teves‘and Rotor ..... Fig. 5 - 110
Front Disc Brake Caliper ‘Akebono‘and Rotor ..... Fig. 5 - 120

Rear Brakes
Rear Disc Brake Caliper and Rotor ..... Fig. 5 - 210

Power Brake Booster
Power Brake Booster ..... Fig. 5 - 310

Brake Master Cylinder
Master Cylinder,Brake ..... Fig. 5 - 410
Hydraulic Control Unit ..... Fig. 5 - 420

Brake Lines and Hoses
Brake Lines and Hoses,Front ..... Fig. 5 - 510
Brake Lines and Hoses,Rear and Chassis ..... Fig. 5 - 520

Brake Pedals
Brake Pedals,Standard and Adjustable ..... Fig. 5 - 610

Front Disc Brake Caliper ‘Continental Teves‘and Rotor
Figure 5-110

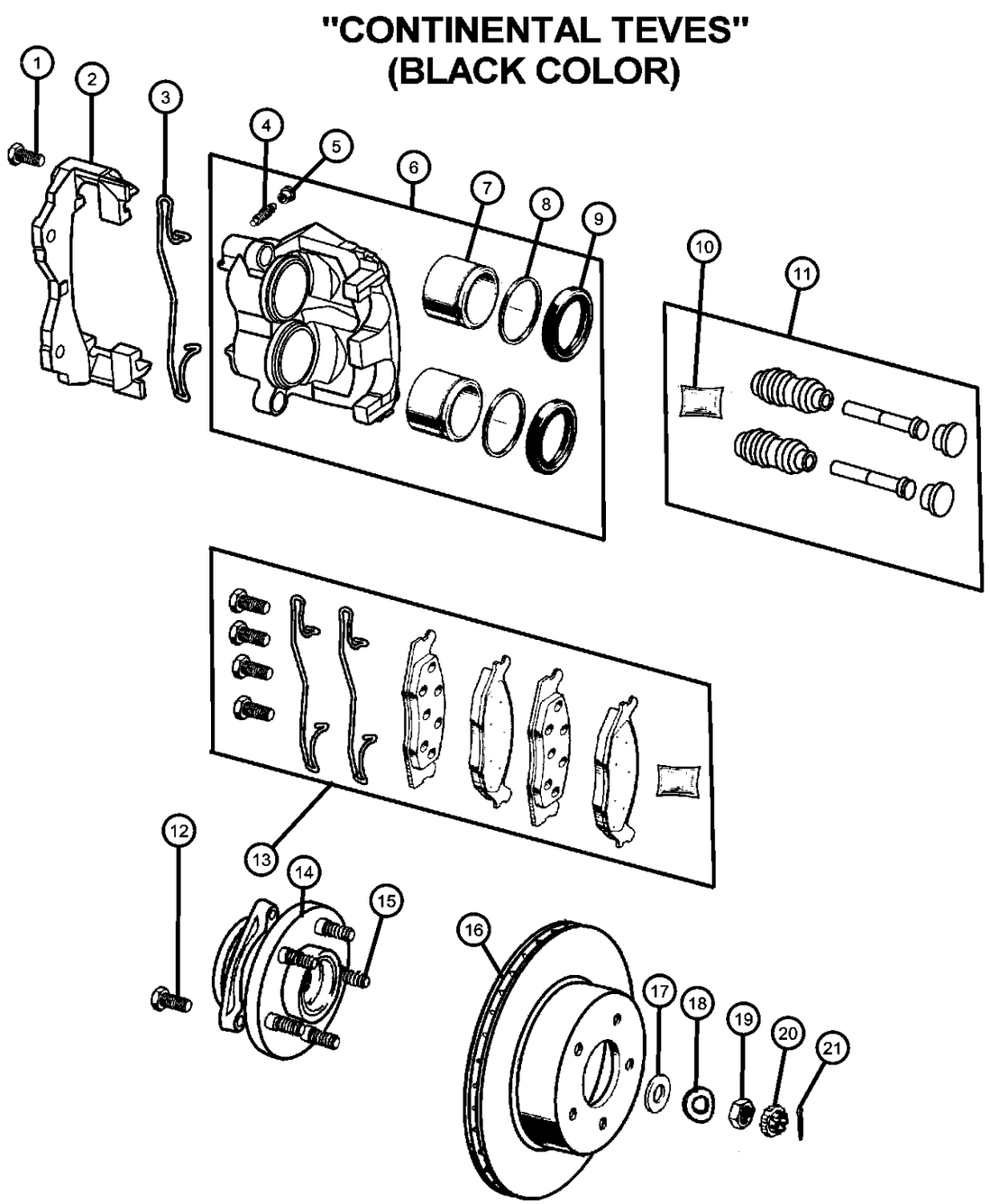

ITEM	PART NUMBER	QTY	LINE	SERIES	BODY	ENGINE	TRANS	TRIM	DESCRIPTION
1									BOLT
	05012437AA	4	T						Caliper Bracket, Mounting
		4	J						Caliper Bracket, Mounting
2									BRACKET
	05011979AA	1	T						Caliper, Mounting
		1	J						Caliper, Mounting
3									SPRING, Brake Shoe Hold Down
	05011971AA	1	T						
		1	J						
4									BLEEDER SCREW, Brake
	04126879	1	T						
		1	J						
5									CAP, Bleeder
	04126733	1	T						
		1	J						
6									CALIPER, Disc Brake
	05011972AA	1	T						Right
		1	J						Right
	05011973AA	1	T						Left
		1	J						Left
7									PISTON, Brake
	05011983AA	2	T						
		2	J						
8									SEAL, Caliper Piston
	05011984AA	2	T						
		2	J						
9									BOOT, Brake Piston
	05011985AA	2	T						
		2	J						
10	05011987AA	1							GREASE, Packet
11									PIN KIT, Disc Brake
	05011981AA	1	T						
		1	J						

GRAND CHEROKEE (WJ)

SERIES	LINE	BODY	ENGINE	TRANSMISSION
H = Laredo	T = JEEP - 2WD	74 = SPORT UTILITY 4-DR	ERH = Engine - 4.0L Power Tech I-6	DGK = 4 Speed Auto, 42RE
M = Sport	J = JEEP - 4WD		EVA = Engine- 4.7L V8 MPI	DGQ = 5 Speed Auto, 45RFE
P = Limited	U = JEEP - 4WD (RHD)		EVC = Engine - 4.7L HO V8 MPI	DG0 = All Automatic Transmissions
S = Overland			ER0 = All 4.0L 6 Cyl. Gas	
			EV0 = All 4.7L Gas	

AR = use ase required - = Non illustrrated part

<< RETURN TO GROUP INDEX

Front Disc Brake Caliper ‘Continental Teves‘and Rotor
Figure 5-110

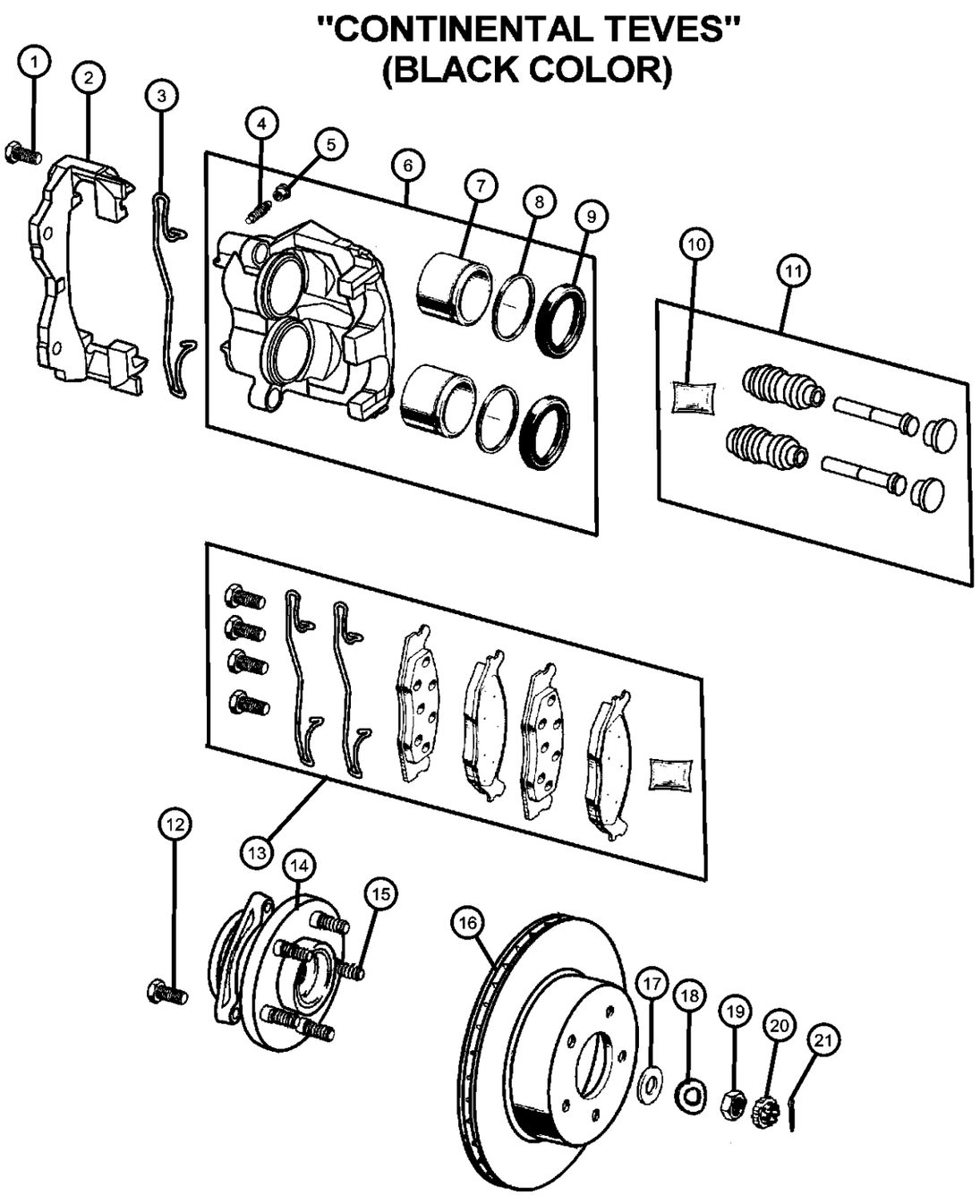

ITEM	PART NUMBER	QTY	LINE	SERIES	BODY	ENGINE	TRANS	TRIM	DESCRIPTION
12									BOLT
	05012436AA	6	T						Hub and Bearing, Mounting
		6	J						Hub and Bearing, Mounting
13									PAD KIT, Front Disc Brake
	05018592AA	1	J						
	VOET3592								Make It Original Brake Kit
	V3013592								Mopar V-Line Alternative Part Ceramic
	BHKH5649								Mopar V-Line Alternative Part Disc Hardware
	BHKH5025								Mopar V-Line Alternative Part Caliper Bolts
	V1013592AB								Mopar V-Line Alternative Part
	VWJT3592								Make It New Brake Kits
	VHDWJ592								Keep It New
		1	T						
	VOET3592								Make It Original Brake Kit
	V3013592								Mopar V-Line Alternative Part Ceramic
	BHKH5649								Mopar V-Line Alternative Part Disc Hardware
	BHKH5025								Mopar V-Line Alternative Part Caliper Bolts
	V1013592AB								Mopar V-Line Alternative Part
	VWJT3592								Make It New Brake Kits
	VHDWJ592								Keep It New
14									HUB AND BEARING, Brake
	52098679AD	2	T						
		2	J						
15									BOLT, Hub and Rotor
	06036388AA	5	J						15.3mm Around Serations, Right or Left
		5	T						15.3mm Around Serations, Right or Left
	06036424AA	5	T						16.3mm Around Serations, Right or Left
		5	J						16.3mm Around Serations, Right or Left

GRAND CHEROKEE (WJ)

SERIES	LINE	BODY	ENGINE	TRANSMISSION
H = Laredo M = Sport P = Limited S = Overland	T = JEEP - 2WD J = JEEP - 4WD U = JEEP - 4WD (RHD)	74 = SPORT UTILITY 4-DR	ERH = Engine - 4.0L Power Tech I-6 EVA = Engine- 4.7L V8 MPI EVC = Engine - 4.7L HO V8 MPI ER0 = All 4.0L 6 Cyl. Gas EV0 = All 4.7L Gas	DGK = 4 Speed Auto, 42RE DGQ = 5 Speed Auto, 45RFE DG0 = All Automatic Transmissions

AR = use ase required - = Non illustrrated part

Front Disc Brake Caliper ‘Continental Teves‘and Rotor
Figure 5-110

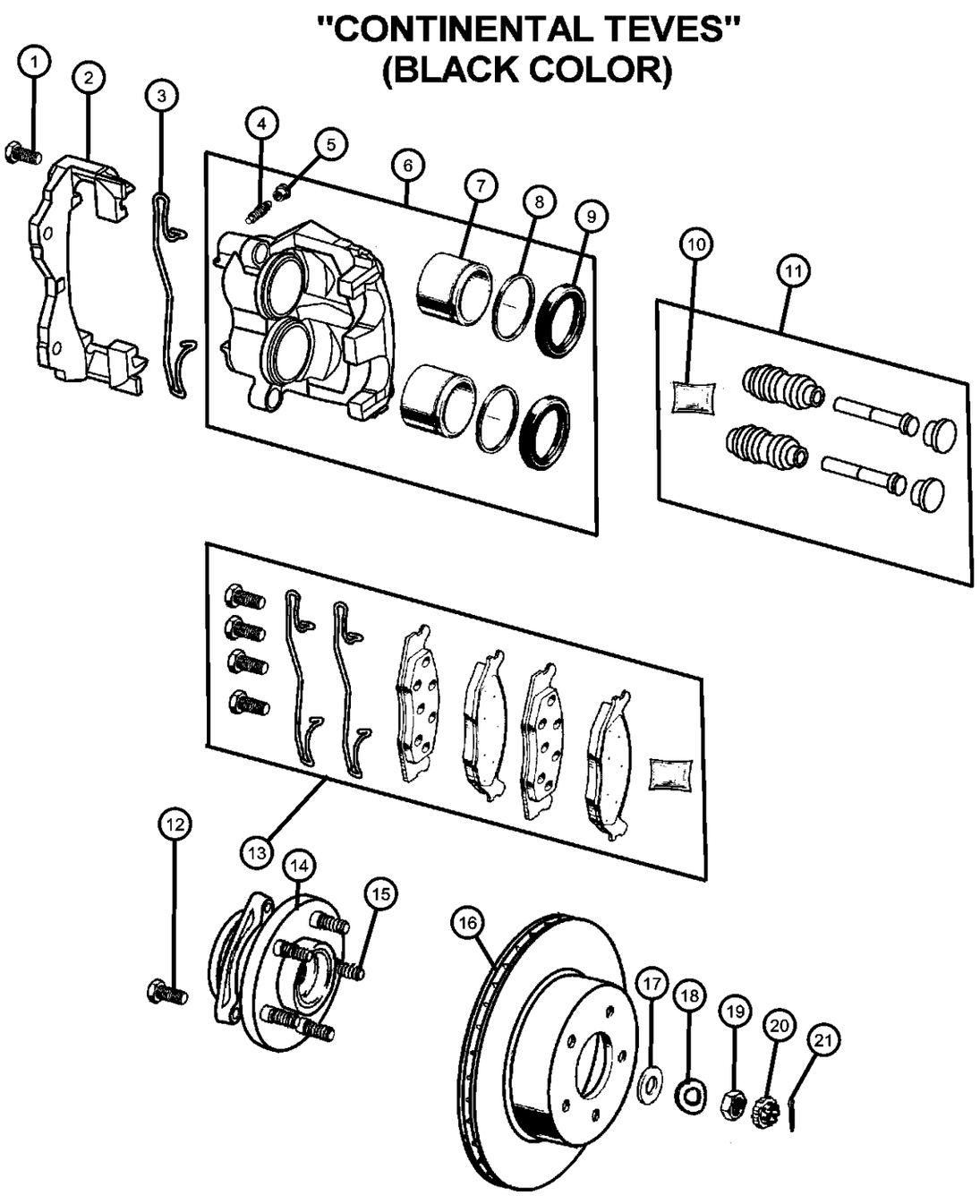

ITEM	PART NUMBER	QTY	LINE	SERIES	BODY	ENGINE	TRANS	TRIM	DESCRIPTION
16									ROTOR, Brake
	52098672	2	T						
	V5018672								Mopar V-Line Alternative Brake Rotors
		2	J						
	V5018672								Mopar V-Line Alternative Brake Rotors
17									WASHER, Flat
	J4200096	2	T						
		2	J						
18									WASHER, Wave
	04740749	2	J						
		1	T						
19									NUT, Hex
	J4200095	2	T						
		2	J						
20									RETAINER, Hub Nut
	J4200097	2	T						
		2	J						
21									PIN, Cotter, M4x40.00
	11010069	6	T						
		2	J						

GRAND CHEROKEE (WJ)

SERIES	LINE	BODY	ENGINE	TRANSMISSION
H = Laredo M = Sport P = Limited S = Overland	T = JEEP - 2WD J = JEEP - 4WD U = JEEP - 4WD (RHD)	74 = SPORT UTILITY 4-DR	ERH = Engine - 4.0L Power Tech I-6 EVA = Engine- 4.7L V8 MPI EVC = Engine - 4.7L HO V8 MPI ER0 = All 4.0L 6 Cyl. Gas EV0 = All 4.7L Gas	DGK = 4 Speed Auto, 42RE DGQ = 5 Speed Auto, 45RFE DG0 = All Automatic Transmissions

Front Disc Brake Caliper ‘Akebono‘and Rotor
Figure 5-120

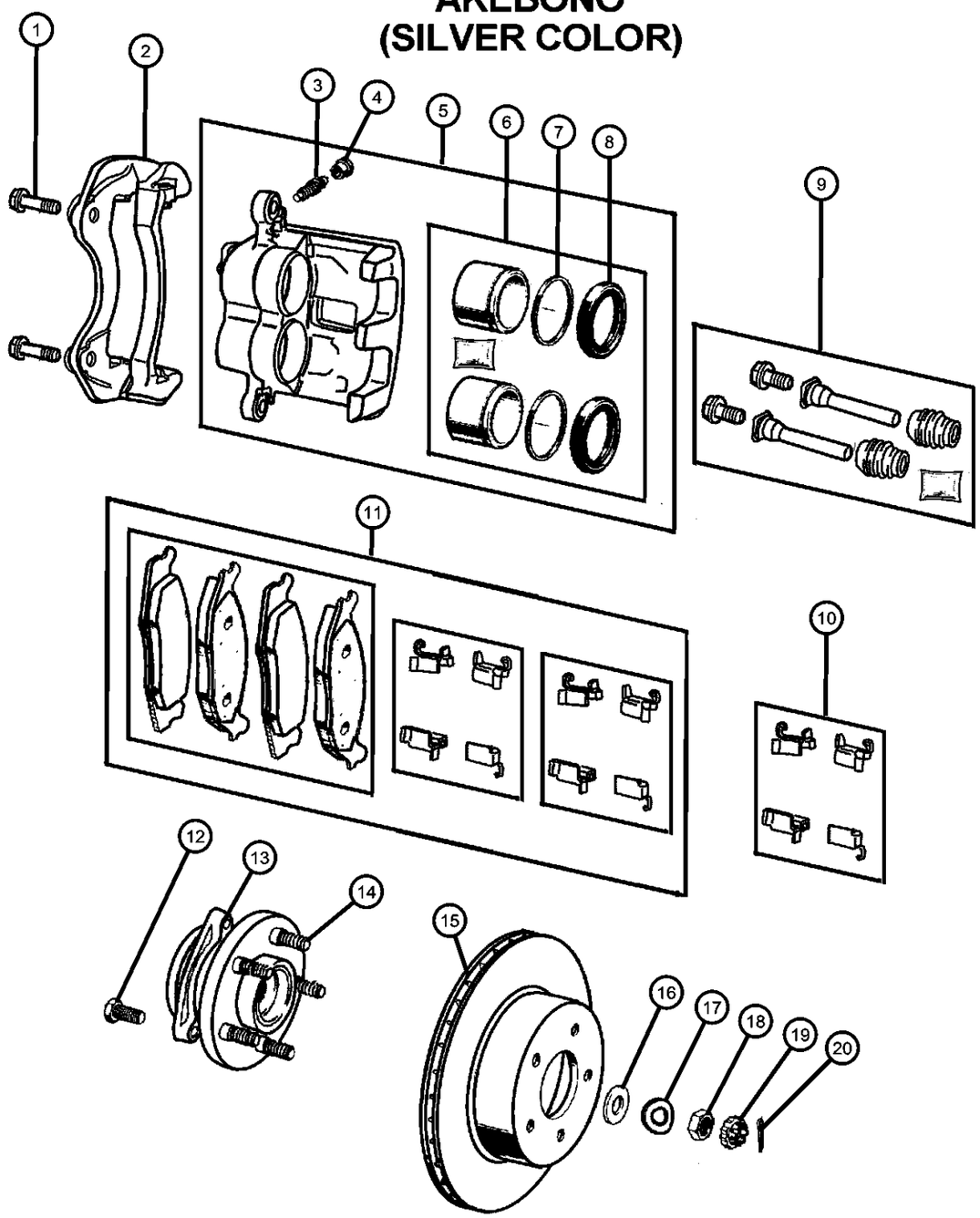

ITEM	PART NUMBER	QTY	LINE	SERIES	BODY	ENGINE	TRANS	TRIM	DESCRIPTION
1									BOLT
	05012437AA	4	T						Caliper Bracket, Mounting
		4	J						Caliper Bracket, Mounting
2									BRACKET
	05093182AA	1	J						Caliper, Mounting
		1	T						Caliper, Mounting
3									BLEEDER SCREW, Brake
	05093189AA	1	J						
		1	T						
4									CAP, Bleeder
	05093190AA	1	J						
		1	T						
5									CALIPER, Disc Brake
	05093180AA	1	J						Right
	VK318081AA								Mopar Loaded Brake Caliper Kit (2 Calipers, Brake Friction)
		1	T						Right
	VK318081AA								Mopar Loaded Brake Caliper Kit (2 Calipers, Brake Friction)
	05093181AA	1	J						Left
	VK318081AA								Mopar Loaded Brake Caliper Kit (2 Calipers, Brake Friction)
		1	T						Left
	VK318081AA								Mopar Loaded Brake Caliper Kit (2 Calipers, Brake Friction)
6									PISTON KIT, Front Brake
	05093186AA	1	J						
		1	T						
7									SEAL, Caliper Piston
	05093187AA	2	J						
		2	T						
8									BOOT, Brake Piston
	05093188AA	2	J						
		2	T						
9									PIN KIT, Disc Brake
	05093184AA	1	J						

GRAND CHEROKEE (WJ)

SERIES	LINE	BODY	ENGINE	TRANSMISSION
H = Laredo M = Sport P = Limited S = Overland	T = JEEP - 2WD J = JEEP - 4WD U = JEEP - 4WD (RHD)	74 = SPORT UTILITY 4-DR	ERH = Engine - 4.0L Power Tech I-6 EVA = Engine- 4.7L V8 MPI EVC = Engine - 4.7L HO V8 MPI ER0 = All 4.0L 6 Cyl. Gas EV0 = All 4.7L Gas	DGK = 4 Speed Auto, 42RE DGQ = 5 Speed Auto, 45RFE DG0 = All Automatic Transmissions

AR = use ase required - = Non illustrrated part

Front Disc Brake Caliper ‘Akebono‘and Rotor
Figure 5-120

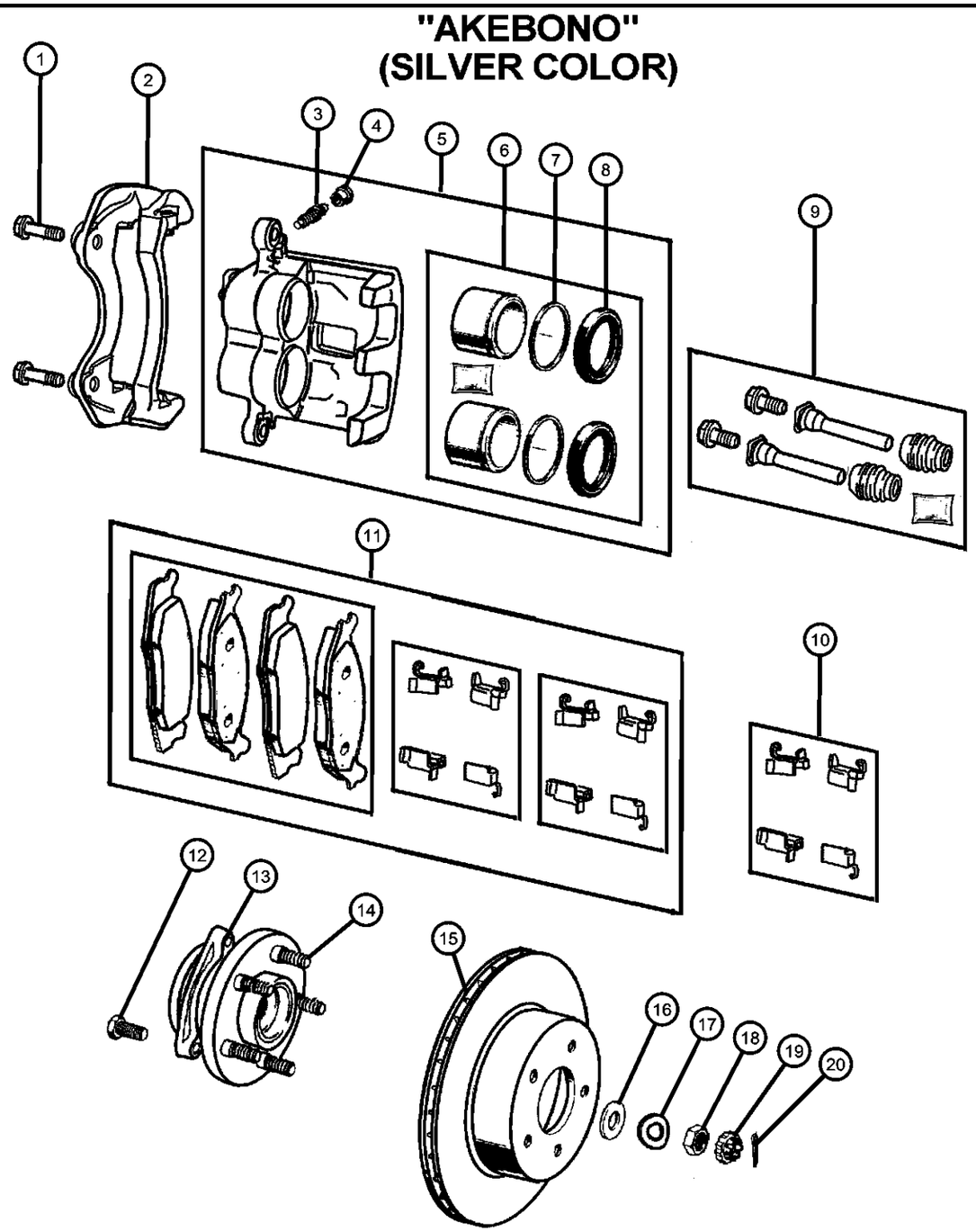

ITEM	PART NUMBER	QTY	LINE	SERIES	BODY	ENGINE	TRANS	TRIM	DESCRIPTION
		1	T						
10									SPRING KIT, Brake Shoe Hold Down
	05093185AA	1	J						
		1	T						
11									PAD KIT, Front Disc Brake
	05093183AA	1	J						
	VOEA3183								Make It Original Brake Kit
	V3013183								Mopar V-Line Alternative Part Ceramic
	V1013183								Mopar V-Line Alternative Part
	BHKH5684								Mopar V-Line Alternative Part Disc Hardware
	BHKH5072								Mopar V-Line Alternative Part Caliper Bolts
	VWJA3183								Make It New Brake Kits
	VK318081AA								Mopar Loaded Brake Caliper Kit (2 Calipers, Brake Friction)
	VHDWJ183								Keep It New
		1	T						
	VOEA3183								Make It Original Brake Kit
	V3013183								Mopar V-Line Alternative Part Ceramic
	V1013183								Mopar V-Line Alternative Part
	BHKH5684								Mopar V-Line Alternative Part Disc Hardware
	BHKH5072								Mopar V-Line Alternative Part Caliper Bolts
	VWJA3183								Make It New Brake Kits
	VK318081AA								Mopar Loaded Brake Caliper Kit (2 Calipers, Brake Friction)
	VHDWJ183								Keep It New
12									BOLT
	05012436AA	6	T						Hub and Bearing, Mounting
		6	J						Hub and Bearing, Mounting
13									HUB AND BEARING, Brake
	52098679AD	2	J						
		2	T						

GRAND CHEROKEE (WJ)

SERIES	LINE	BODY	ENGINE	TRANSMISSION
H = Laredo M = Sport P = Limited S = Overland	T = JEEP - 2WD J = JEEP - 4WD U = JEEP - 4WD (RHD)	74 = SPORT UTILITY 4-DR	ERH = Engine - 4.0L Power Tech I-6 EVA = Engine- 4.7L V8 MPI EVC = Engine - 4.7L HO V8 MPI ER0 = All 4.0L 6 Cyl. Gas EV0 = All 4.7L Gas	DGK = 4 Speed Auto, 42RE DGQ = 5 Speed Auto, 45RFE DG0 = All Automatic Transmissions

AR = use ase required - = Non illustrrated part

Front Disc Brake Caliper ‘Akebono‘and Rotor
Figure 5-120

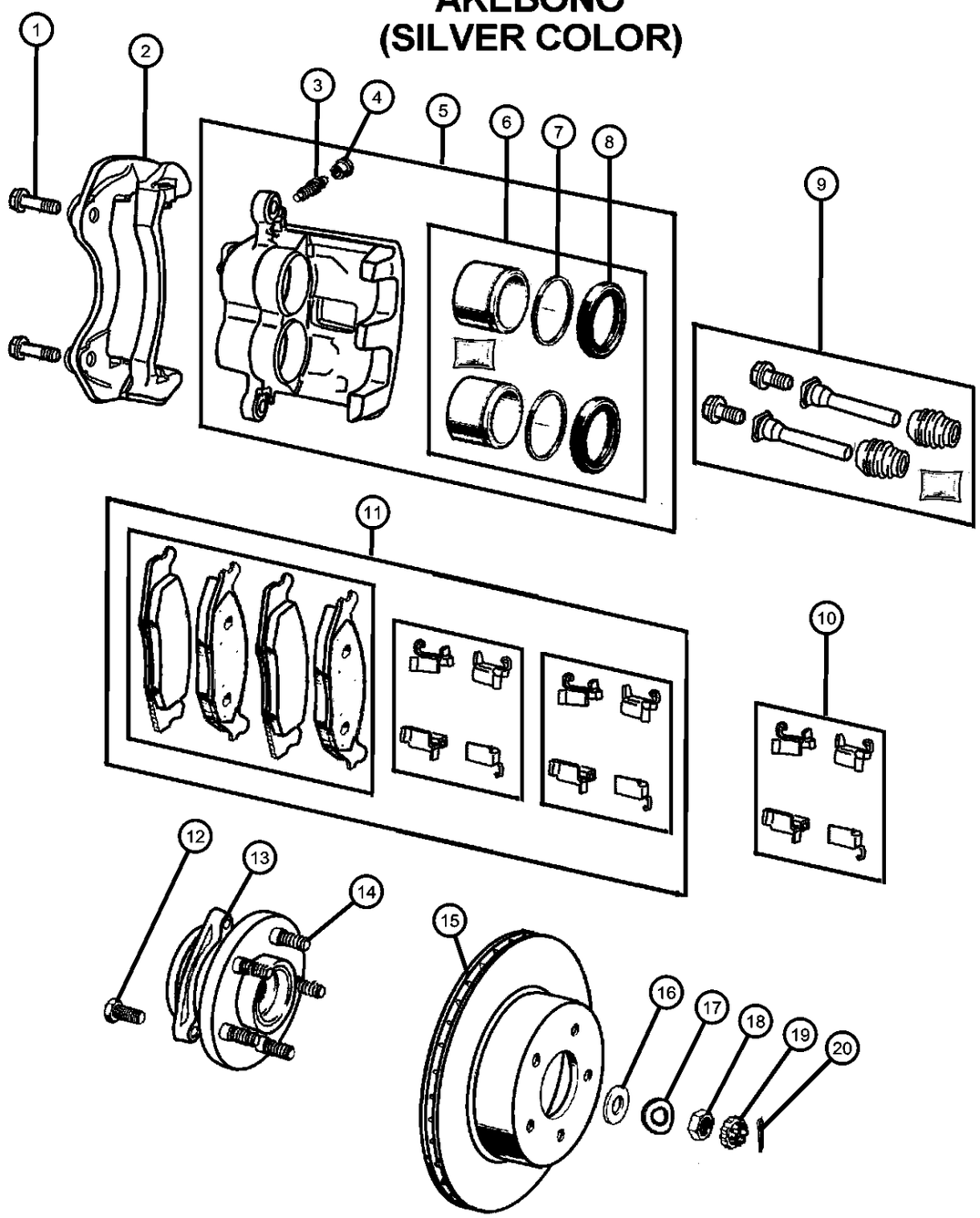

ITEM	PART NUMBER	QTY	LINE	SERIES	BODY	ENGINE	TRANS	TRIM	DESCRIPTION
14									BOLT, Hub and Rotor
	06036388AA	5	J						15.3mm Around Serations, Right or Left
		5	T						15.3mm Around Serations, Right or Left
	06036424AA	5	T						16.3mm Around Serations, Right or Left
		5	J						16.3mm Around Serations, Right or Left
15									ROTOR, Brake
	52098672	2	J						
	V5018672								Mopar V-Line Alternative Brake Rotors
		2	T						
	V5018672								Mopar V-Line Alternative Brake Rotors
16									WASHER, Flat
	J4200096	2	J						
		2	T						
17									WASHER, Wave
	04740749	2	T						
		2	J						
18									NUT, Hex
	J4200095	2	T						
		2	J						
19									RETAINER, Hub Nut
	J4200097	2	T						
		2	J						
20									PIN, Cotter, M4x40.00
	11010069	2	J						
		2	T						

GRAND CHEROKEE (WJ)

SERIES	LINE	BODY	ENGINE	TRANSMISSION
H = Laredo M = Sport P = Limited S = Overland	T = JEEP - 2WD J = JEEP - 4WD U = JEEP - 4WD (RHD)	74 = SPORT UTILITY 4-DR	ERH = Engine - 4.0L Power Tech I-6 EVA = Engine- 4.7L V8 MPI EVC = Engine - 4.7L HO V8 MPI ER0 = All 4.0L 6 Cyl. Gas EV0 = All 4.7L Gas	DGK = 4 Speed Auto, 42RE DGQ = 5 Speed Auto, 45RFE DG0 = All Automatic Transmissions

Rear Disc Brake Caliper and Rotor
Figure 5-210

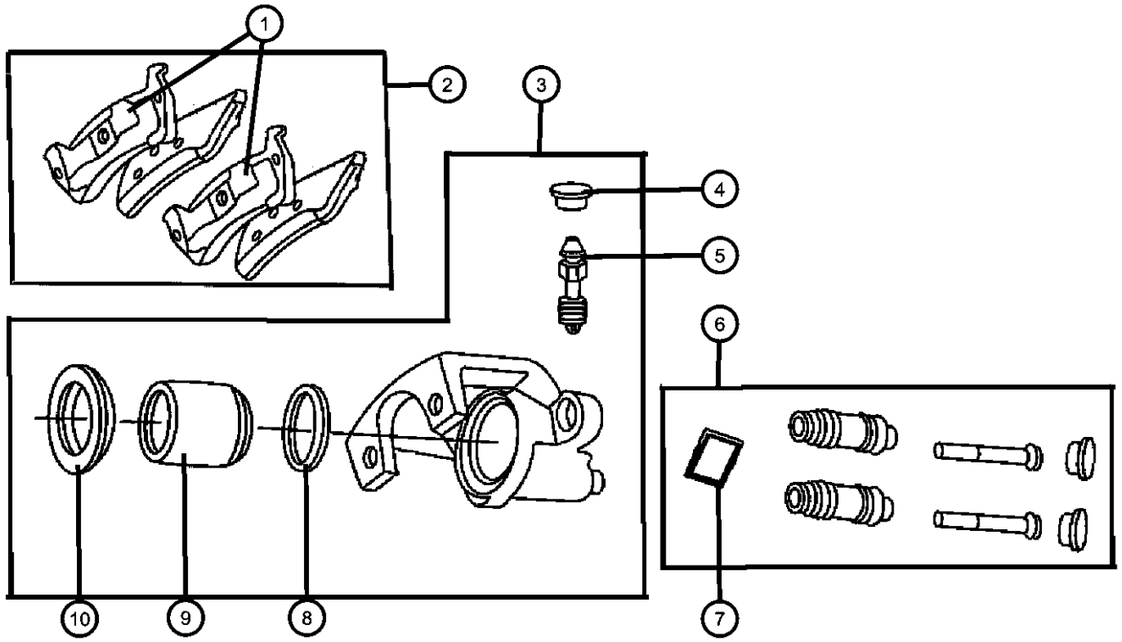

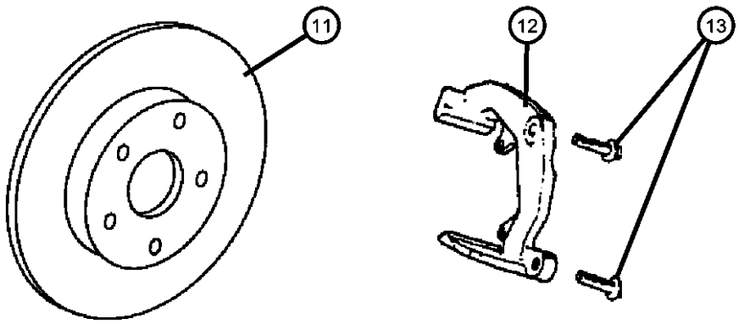

ITEM	PART NUMBER	QTY	LINE	SERIES	BODY	ENGINE	TRANS	TRIM	DESCRIPTION
1	05011978AA	1							SPRING, Brake Shoe Hold Down
2	05011970AA	1							PAD KIT, Rear Disc Brake
	BHKH5025								Mopar V-Line Alternative Part Caliper Bolts
	BHKH5648								Mopar V-Line Alternative Part Disc Hardware
	V2013970AB								Mopar V-Line Alternative Part
	V4010791								Mopar V-Line Alternative Part Ceramic
	VRWJ3970								Mopar Make it New Rear
3									CALIPER, Disc Brake
	05011974AA	1							Right
	05011975AA	1							Left
4	04126733	1							CAP, Bleeder
5	04126879	1							SCREW, Bleeder
6	05011981AA	1							PIN KIT, Disc Brake
7	05011987AA	1							GREASE, Packet
8	05011984AA	1							SEAL, Caliper Piston
9	05011983AA	1							PISTON, Brake
10	05011985AA	1							BOOT, Brake Piston
11	52098666	2							ROTOR, Brake
	V5018666								Mopar V-Line Alternative Brake Rotors
12	05011980AA	1							BRACKETRight or Left
13	05012437AA	1							BOLT
-14									SENSOR, Wheel Speed
	56041308AA	1							Right
	56041509AA	1							Left
-15	56041290AA	6							RETAINER, Brake Sensor Wire, ABS Sensor Cable to Brake Cable

GRAND CHEROKEE (WJ)

SERIES	LINE	BODY	ENGINE	TRANSMISSION
H = Laredo M = Sport P = Limited S = Overland	T = JEEP - 2WD J = JEEP - 4WD U = JEEP - 4WD (RHD)	74 = SPORT UTILITY 4-DR	ERH = Engine - 4.0L Power Tech I-6 EVA = Engine- 4.7L V8 MPI EVC = Engine - 4.7L HO V8 MPI ER0 = All 4.0L 6 Cyl. Gas EV0 = All 4.7L Gas	DGK = 4 Speed Auto, 42RE DGQ = 5 Speed Auto, 45RFE DG0 = All Automatic Transmissions

AR = use ase required - = Non illustrrated part

Power Brake Booster
Figure 5-310

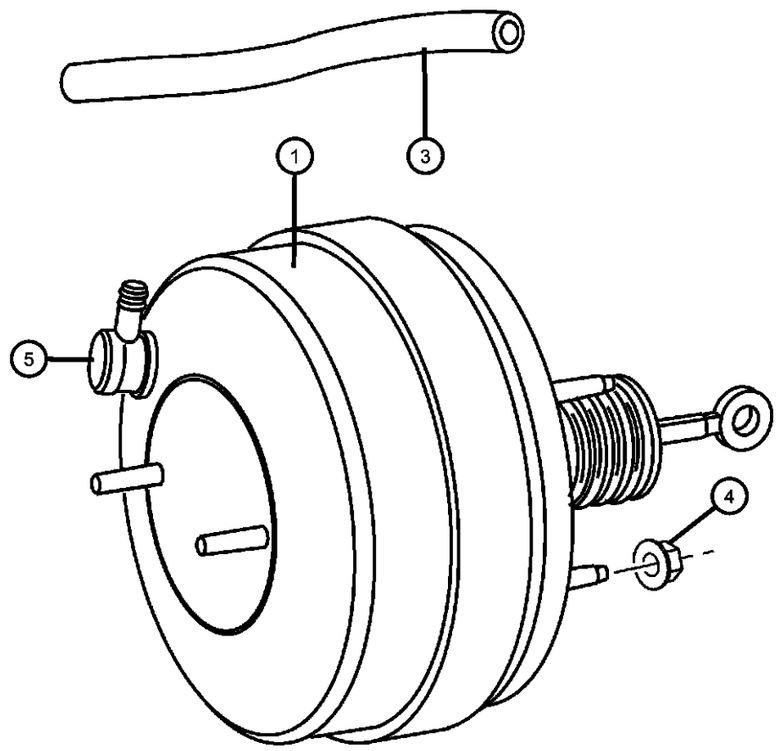

ITEM	PART NUMBER	QTY	LINE	SERIES	BODY	ENGINE	TRANS	TRIM	DESCRIPTION
Note:Sales Codes;									
[ER0]=Engines - All 4.0L 6 Cylinder Gas									
[EV0]=Engines - All 4.7L Gas									
1	05011261AB	1							BOOSTER, Power Brake
-2	05012506AA	1							GASKET, Booster to Firewall, Mounting
3									HOSE, Brake Vacuum
	52128097	1							[ER0]
	52128098	1							[EV0]
4	06100517	4							NUT, Hex Flange Lock, Booster to Firewall, Mounting
5	05011263AA	1							VALVE, Check, Elbow, With grommet

GRAND CHEROKEE (WJ)

SERIES	LINE	BODY	ENGINE	TRANSMISSION
H = Laredo	T = JEEP - 2WD	74 = SPORT UTILITY 4-DR	ERH = Engine - 4.0L Power Tech I-6	DGK = 4 Speed Auto, 42RE
M = Sport	J = JEEP - 4WD		EVA = Engine- 4.7L V8 MPI	DGQ = 5 Speed Auto, 45RFE
P = Limited	U = JEEP - 4WD (RHD)		EVC = Engine - 4.7L HO V8 MPI	DG0 = All Automatic Transmissions
S = Overland			ER0 = All 4.0L 6 Cyl. Gas	
			EV0 = All 4.7L Gas	

Master Cylinder,Brake
Figure 5-410

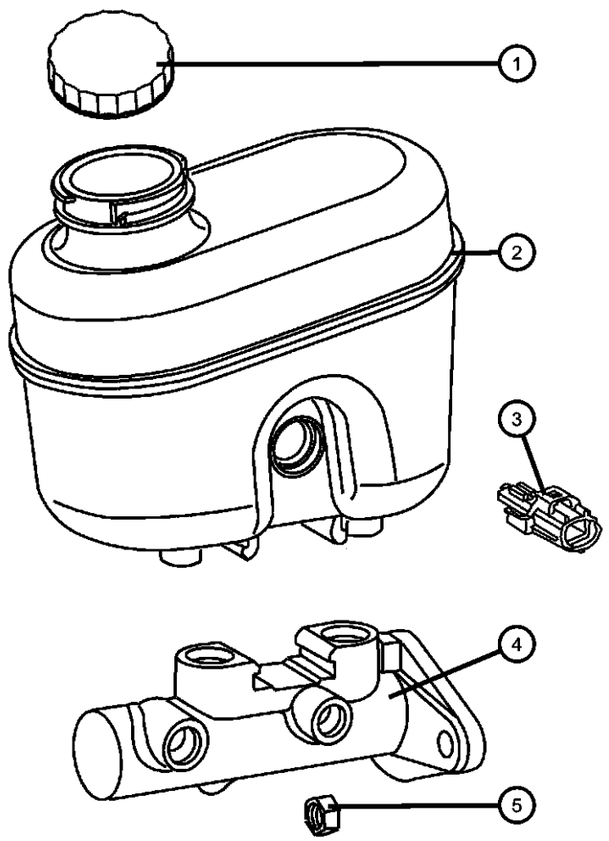

ITEM	PART NUMBER	QTY	LINE	SERIES	BODY	ENGINE	TRANS	TRIM	DESCRIPTION
1	05014518AA	1							CAP, Master Cylinder Reservoir
2	05011262AA	1							RESERVOIR, Brake Master Cylinder, Includes Items 1,3
3	05013903AA	1							SENSOR, Brake Fluid Level
4	05011260AA	1							MASTER CYLINDER, Brake
5	06101467	2							NUT, Hex Flange, M8x1.25, Master Cylinder to Booster, Mounting

GRAND CHEROKEE (WJ)

SERIES	LINE	BODY	ENGINE	TRANSMISSION
H = Laredo M = Sport P = Limited S = Overland	T = JEEP - 2WD J = JEEP - 4WD U = JEEP - 4WD (RHD)	74 = SPORT UTILITY 4-DR	ERH = Engine - 4.0L Power Tech I-6 EVA = Engine- 4.7L V8 MPI EVC = Engine - 4.7L HO V8 MPI ER0 = All 4.0L 6 Cyl. Gas EV0 = All 4.7L Gas	DGK = 4 Speed Auto, 42RE DGQ = 5 Speed Auto, 45RFE DG0 = All Automatic Transmissions

Hydraulic Control Unit
Figure 5-420

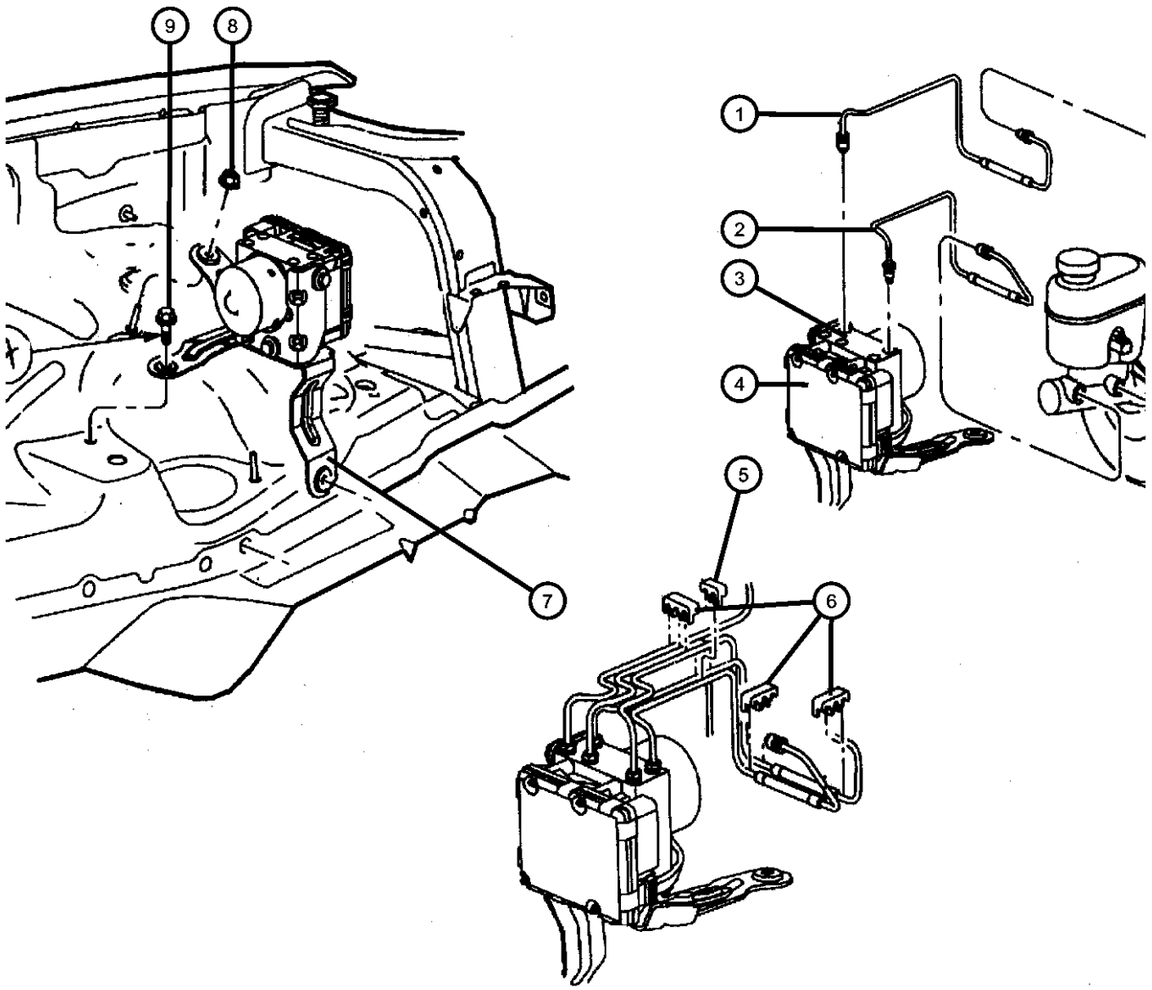

ITEM	PART NUMBER	QTY	LINE	SERIES	BODY	ENGINE	TRANS	TRIM	DESCRIPTION
1	52089220AA	1							HOSE, BrakePrimary
2	52089219AA	1							HOSE, BrakeSecondary
3	05066657AA	1							CONTROL UNIT, Anti-Lock Brake
4	05066653AA	1							MODULE, Anti-lock Brakes
5	52008940	1							CLIP, Brake Line, 2-Way Brake Tube, Mounting
6	52009163	4							CLIP, Brake Line, 3-Way Brake Tube, Mounting
7	05066655AA	1							BRACKET, Hydraulic Control UnitMounting
8	34201711	1							NUT, Hex Flange, M8x1.25, ICU Bracket, Mounting
9	06505923AA	2							BOLT, ICU Bracket, Mounting

GRAND CHEROKEE (WJ)

SERIES	LINE	BODY	ENGINE	TRANSMISSION
H = Laredo	T = JEEP - 2WD	74 = SPORT UTILITY 4-DR	ERH = Engine - 4.0L Power Tech I-6	DGK = 4 Speed Auto, 42RE
M = Sport	J = JEEP - 4WD		EVA = Engine- 4.7L V8 MPI	DGQ = 5 Speed Auto, 45RFE
P = Limited	U = JEEP - 4WD (RHD)		EVC = Engine - 4.7L HO V8 MPI	DG0 = All Automatic Transmissions
S = Overland			ER0 = All 4.0L 6 Cyl. Gas	
			EV0 = All 4.7L Gas	

Brake Lines and Hoses,Front
Figure 5-510

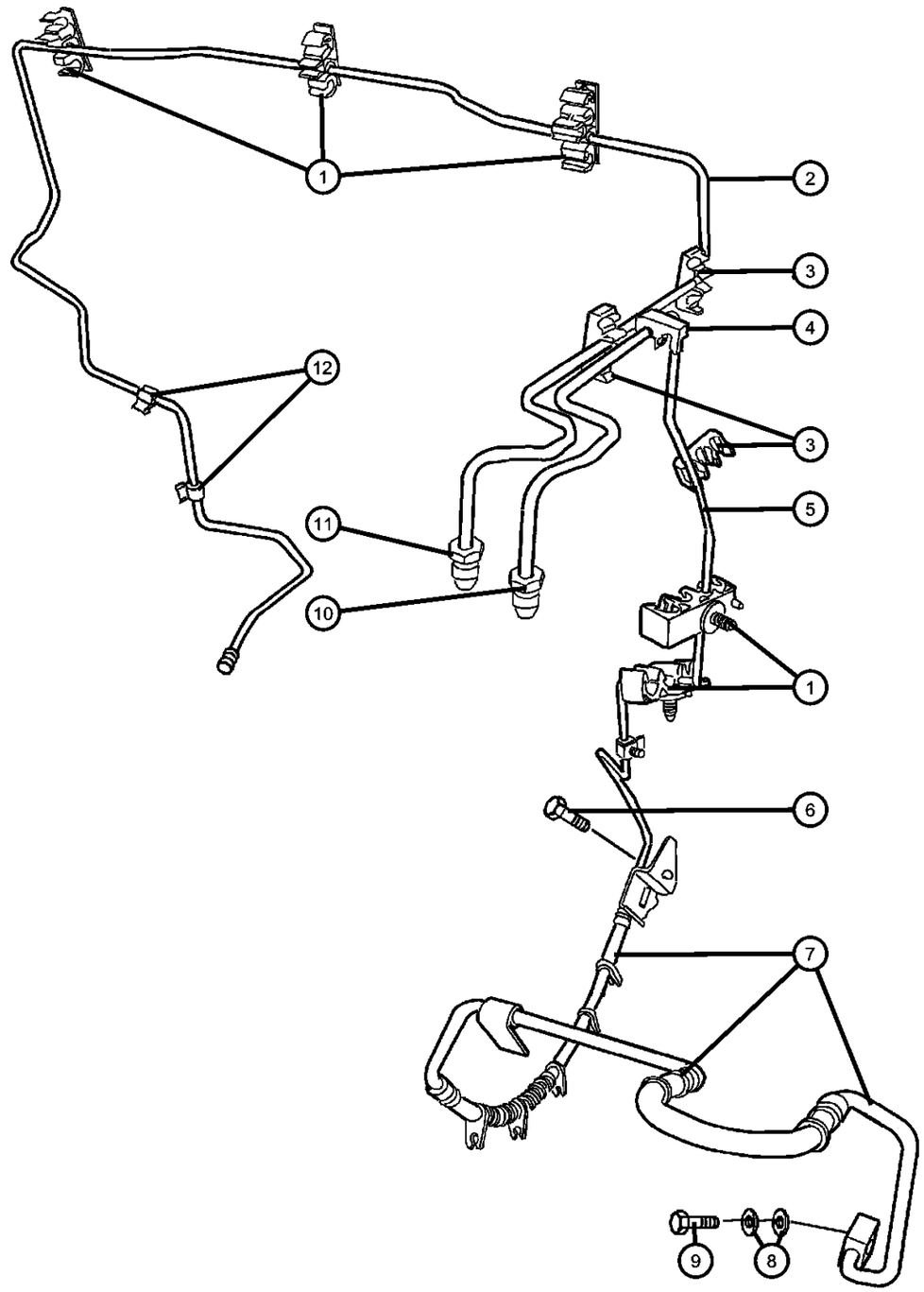

ITEM	PART NUMBER	QTY	LINE	SERIES	BODY	ENGINE	TRANS	TRIM	DESCRIPTION
1	52128214	3							CLIP, Brake Line, To Plenum-2-Way
2	52128366AB	1							TUBE, BrakeRight
3	52009163	3							CLIP, Brake Line, 3-Way, Mounting
4	52008940	1							CLIP, Brake Line, 2-Way, Mounting
5	52128441AA	1							TUBE, Brake, ICU to Front Brake Hose, Left
6									BOLT
	J4200158	2							Brake Hose to Spring Seat, Mounting
		2							Brake Hose to Sill, Mounting
7									HOSE, Brake
	52128092AB	1							Right
	V1128092AA								Mopar V-Line Alternative Brake Hoses and Tubes
	52128093AB	1							Left
	V1128093AA								Mopar V-Line Alternative Brake Hoses and Tubes
8	06035886	8							GASKET, Brake Hose To CaliperMounting
9	06035832	4							BOLT, Banjo, Brake Hose to Caliper, Mounting
10	32000411	1							NUT, Brake Line, To ICU
11	06503399	1							NUT, Brake Line, To ICU
12	52009234	3							FASTENER, Push Pin, Brake Tube to Sill, Mounting

GRAND CHEROKEE (WJ)

SERIES	LINE	BODY	ENGINE	TRANSMISSION
H = Laredo	T = JEEP - 2WD	74 = SPORT UTILITY 4-DR	ERH = Engine - 4.0L Power Tech I-6	DGK = 4 Speed Auto, 42RE
M = Sport	J = JEEP - 4WD		EVA = Engine- 4.7L V8 MPI	DGQ = 5 Speed Auto, 45RFE
P = Limited	U = JEEP - 4WD (RHD)		EVC = Engine - 4.7L HO V8 MPI	DG0 = All Automatic Transmissions
S = Overland			ER0 = All 4.0L 6 Cyl. Gas	
			EV0 = All 4.7L Gas	

Brake Lines and Hoses,Rear and Chassis
Figure 5-520

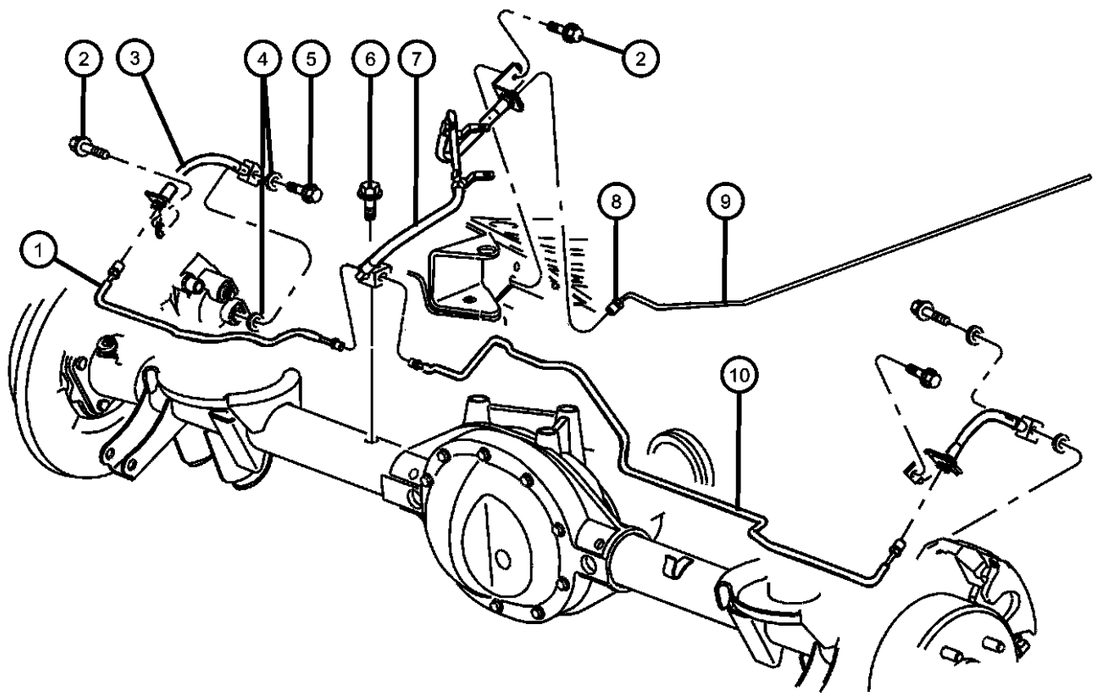

ITEM	PART NUMBER	QTY	LINE	SERIES	BODY	ENGINE	TRANS	TRIM	DESCRIPTION
1	52128440AA	1							TUBE, BrakeLeft
2	52128440AA	1							SCREW, Hex Flange Head, M6x1.00x20.00, Right and Left, (NOT SERVICED)
3									HOSE, Brake
	52128094	1							Right
	52128095	1							Left
4	06035886	8							GASKET, Brake Hose To CaliperRight & Left
5	J4006700	4							BOLT, BanjoRight & Left
6	04137696	1							SCREW, Brake Tee, .437-20x2.07
7	52128096AB	1							HOSE, Brake, with Tee
8	06503707	1							NUT, Brake Line
9	52128438AB	1							TUBE, BrakeRear
10	52128439AA	1							TUBE, BrakeRight
-11									SENSOR, Wheel Speed
	56041308AA	1							Right
	56041509AA	1							Left

GRAND CHEROKEE (WJ)

SERIES	LINE	BODY	ENGINE	TRANSMISSION
H = Laredo M = Sport P = Limited S = Overland	T = JEEP - 2WD J = JEEP - 4WD U = JEEP - 4WD (RHD)	74 = SPORT UTILITY 4-DR	ERH = Engine - 4.0L Power Tech I-6 EVA = Engine- 4.7L V8 MPI EVC = Engine - 4.7L HO V8 MPI ER0 = All 4.0L 6 Cyl. Gas EV0 = All 4.7L Gas	DGK = 4 Speed Auto, 42RE DGQ = 5 Speed Auto, 45RFE DG0 = All Automatic Transmissions

Brake Pedals,Standard and Adjustable
Figure 5-610

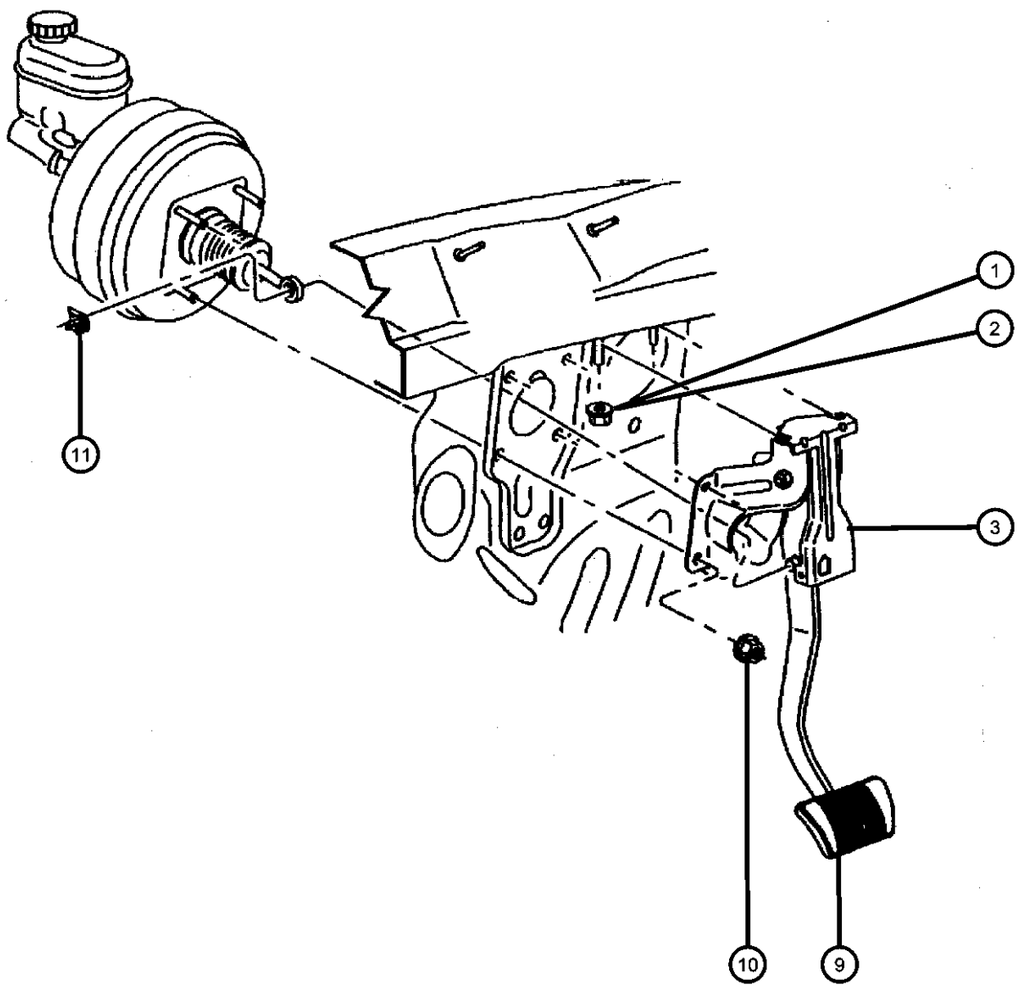

ITEM	PART NUMBER	QTY	LINE	SERIES	BODY	ENGINE	TRANS	TRIM	DESCRIPTION
Note: Sales Codes; [XAM]=Pedals - Power Adjustable with Memory [XAP]=Pedals - Power Adjustable									
1	06100517	2							NUT, Hex Flange Lock, M8 Phosphate, Pedal Bracket-Up To and Including 08-06-01, Mounting
2	06100050	2							NUT AND WASHER, Hex, M8x1.25, Pedal Bracket-08-07-01 and After, Mounting
3									PEDAL, Brake
	52128148AD	1							Without [XAM,XAP]
	52129200AF	1							With [XAM,XAP]
-4	05073040AA	1							HARNESS, With [XAM,XAP]
-5	05073041AA	1							MOTOR, Adjustable Brake and Accelerator Pedal, With [XAM,XAP]
-6	05072251AA	1							MODULE, Brake Pedal, With [XAM,XAP]
-7	04671336	1							SWITCH, Stop Lamp, Without [XAM,XAP]
-8									SWITCH, Adjustable Pedals
	5HU331DVAB	1							With [XAM,XAP] DB
		1							With [XAM,XAP] DV
	5HU331L8AB	1							With [XAM,XAP] L5
	5HU331TMAB	1							With [XAM,XAP] T5
9	04779027	1							PAD, Pedal
10	06100517	4							NUT, Hex Flange Lock, M8 Phosphate, Booster to Sled, Mounting
11	06035334	1							CLIP, Brake Push RodMounting

GRAND CHEROKEE (WJ)

SERIES	LINE	BODY	ENGINE	TRANSMISSION
H = Laredo M = Sport P = Limited S = Overland	T = JEEP - 2WD J = JEEP - 4WD U = JEEP - 4WD (RHD)	74 = SPORT UTILITY 4-DR	ERH = Engine - 4.0L Power Tech I-6 EVA = Engine- 4.7L V8 MPI EVC = Engine - 4.7L HO V8 MPI ER0 = All 4.0L 6 Cyl. Gas EV0 = All 4.7L Gas	DGK = 4 Speed Auto, 42RE DGQ = 5 Speed Auto, 45RFE DG0 = All Automatic Transmissions

Group - 7

Cooling

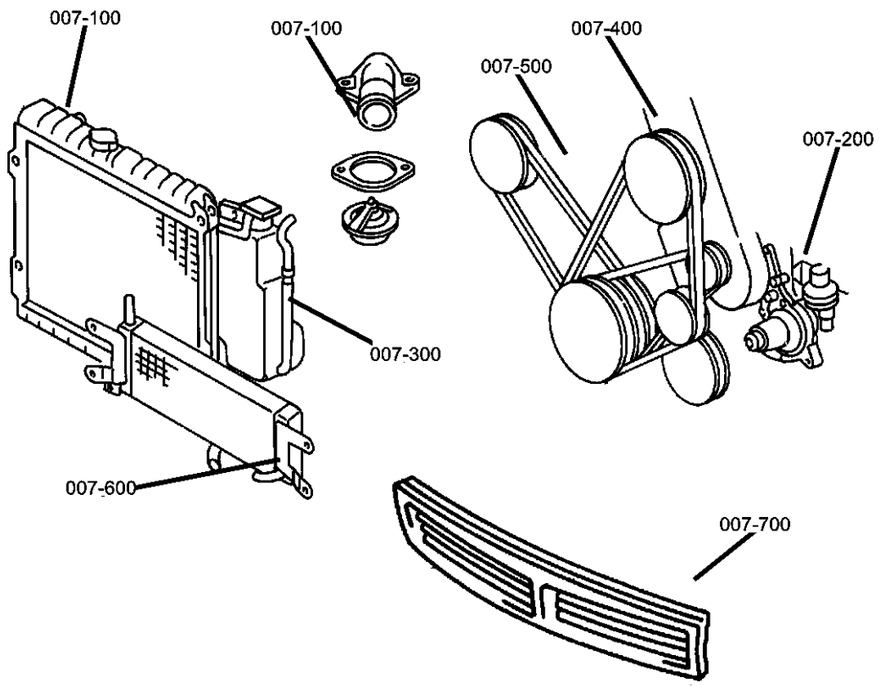

007-100 Radiator and Related Parts 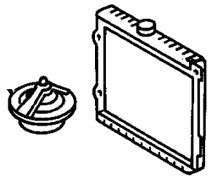	**007-200** Water Pump and Related Parts 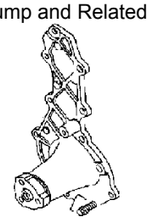	**007-300** Tank, Coolant Engine 	**007-400** Pulleys and Related Parts 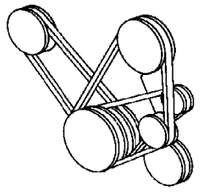
007-500 Drive Belts 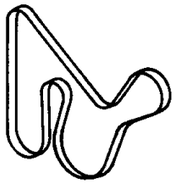	**007-600** Lines, Transmission Oil Cooler 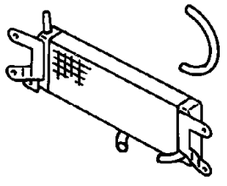	**007-700** Grilles 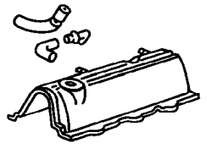	

Group - 7 Cooling

Illustration Title — Group-Fig. No.

Radiator and Related Parts
Radiator and Related Parts 4.0L Engine ..... Fig. 7 - 150
Radiator and Related Parts 4.7L Engine ..... Fig. 7 - 160
Radiator Upper Support ..... Fig. 7 - 170

Water Pump and Related Parts
Water Pump and Related Parts 4.0L Engine ..... Fig. 7 - 210
Water Pump and Related Parts 4.7L Engine ..... Fig. 7 - 220

Tank, Coolant Engine
Coolant Tank, 4.0,4.7L Engine ..... Fig. 7 - 310

Pulleys and Related Parts
Drive Pulleys 4.0L Engine ..... Fig. 7 - 420
Drive Pulleys 4.7L Engine ..... Fig. 7 - 430

Drive Belts
Drive Belts 4.0L and 4.7L Engines ..... Fig. 7 - 520

Lines, Transmission Oil Cooler
Oil Cooler and Lines 4.0L Engines ..... Fig. 7 - 610
Oil Cooler and Lines 4.7L Engine ..... Fig. 7 - 620

Grilles
Grille and Related Parts ..... Fig. 7 - 720

Radiator and Related Parts 4.0L Engine
Figure 7-150

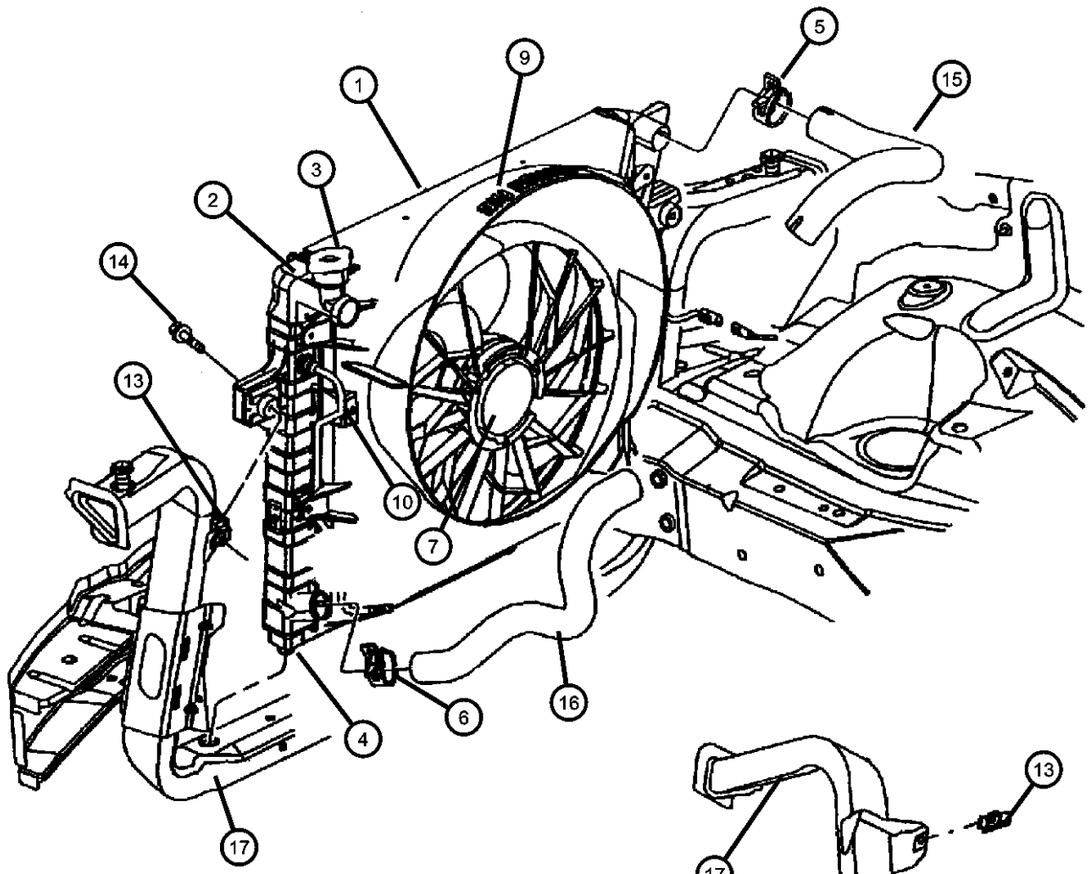

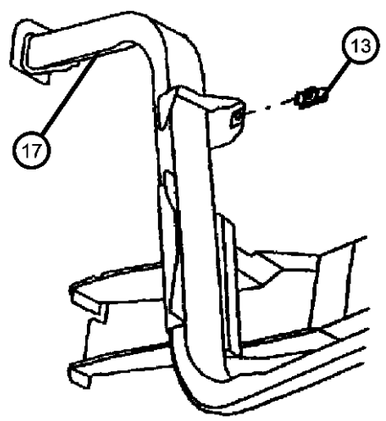

ITEM	PART NUMBER	QTY	LINE	SERIES	BODY	ENGINE	TRANS	TRIM	DESCRIPTION
Note: Sales Code ER0 = 4.0L Engine									
Note: Sales Code DG0 = All Auto Trans									
1	55115918AC	1				ER0	DG0		CONDENSER, Air Conditioning
2	52079428AB	1				ER0	DG0		RADIATOR, Engine Cooling
3	52079799AA	1				ER0	DG0		CAP, Radiator
4	52079419	2				ER0	DG0		ISOLATOR, RadiatorLeft
5	52005580	1				ER0, EV0			CLAMP, HOSE, 50X15
6	52005580	1				ER0, EV0			CLAMP, HOSE, 50X15
7									FAN, Cooling
	52079528AB	1				ER0	DG0		Electric
	52079984AA	1				ER0			Mechanical
-8	55116813AA	1				ER0			VISCOUS CLUTCH, Fan Drive
9	52079489AB	1				ER0	DG0		SHROUD, Fan
10									TUBE, Oil Cooler
	52079753AB	1				ER0	DG0		Return
	52079432AB	1				ER0	DG0		Pressure
-11	52079886AA	1				ER0	DG0		SEAL, Radiator Condenser
-12									SEAL, Radiator
	55115922	1				ER0	DG0		Right
	55115923	1				ER0	DG0		Left
13	06505172AA	4				ER0	DG0		U-NUT, M6x1.00
14	06102117AA	4				ER0	DG0		SCREW AND WASHER, Hex Head, M6x1x20
15	52079406AC	1				ER0			HOSE, Radiator Inlet
16	52079401AB	1				ER0			HOSE, Radiator Outlet
17	55135870AE	1							CROSSMEMBER, Radiator
-18	53020547AB	1				ER0			GASKET, Thermostat
-19	53006192	1				ER0			HOUSING, Thermostat
-20	52028186	1				ER0			THERMOSTAT, 195 Degrees
-21									DRAINCOCK, Radiator
	52028466	1				EV0			
		1				ER0	DG0		

GRAND CHEROKEE (WJ)

SERIES	LINE	BODY	ENGINE	TRANSMISSION
H = Laredo M = Sport P = Limited S = Overland	T = JEEP - 2WD J = JEEP - 4WD U = JEEP - 4WD (RHD)	74 = SPORT UTILITY 4-DR	ERH = Engine - 4.0L Power Tech I-6 EVA = Engine- 4.7L V8 MPI EVC = Engine - 4.7L HO V8 MPI ER0 = All 4.0L 6 Cyl. Gas EV0 = All 4.7L Gas	DGK = 4 Speed Auto, 42RE DGQ = 5 Speed Auto, 45RFE DG0 = All Automatic Transmissions

AR = use ase required - = Non illustrrated part

<< RETURN TO GROUP INDEX

Radiator and Related Parts 4.7L Engine
Figure 7-160

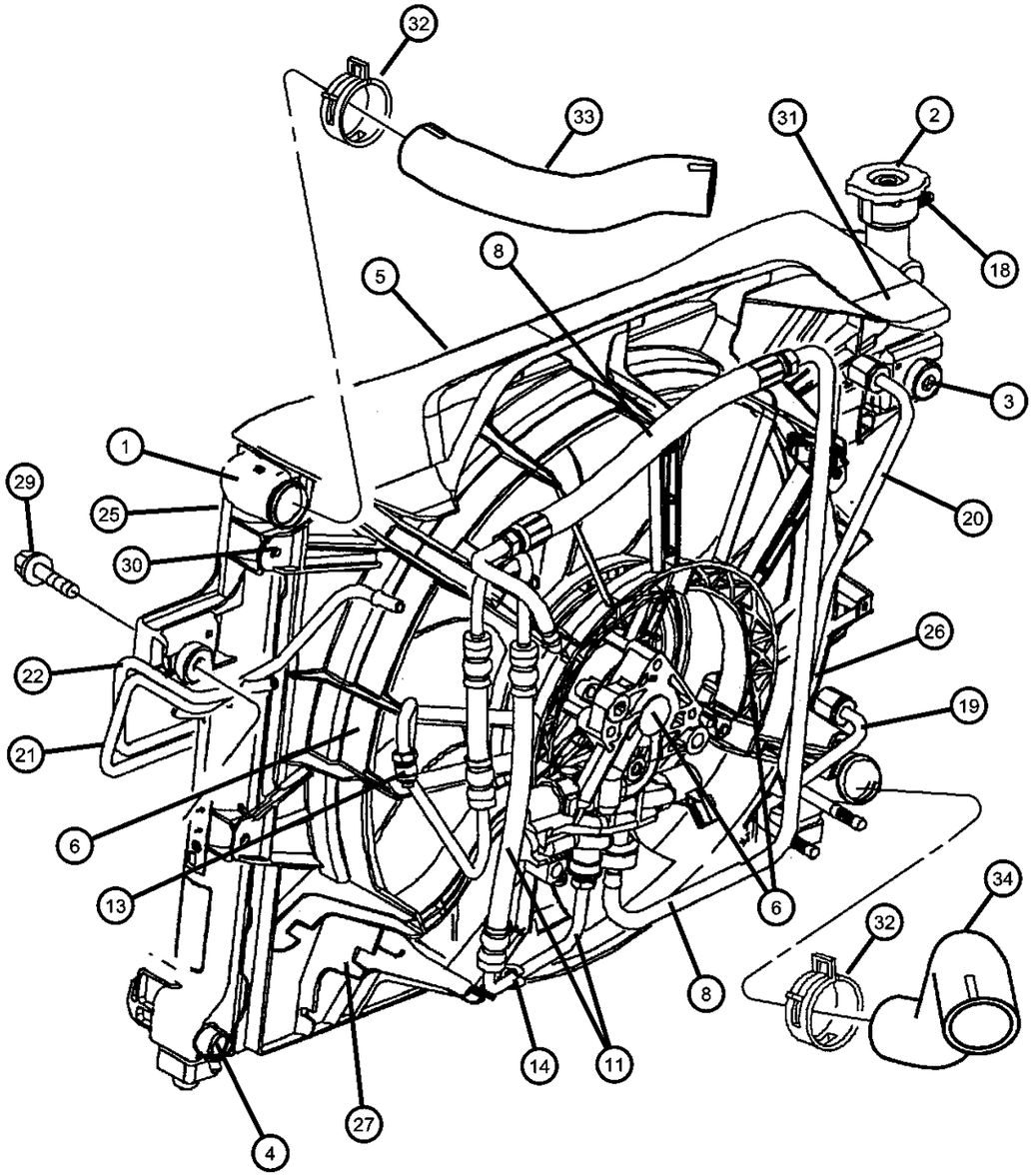

ITEM	PART NUMBER	QTY	LINE	SERIES	BODY	ENGINE	TRANS	TRIM	DESCRIPTION
Note:									
ER0 = All 4.0L Engines									
EV0 = All 4.7L Engine									
1	52079883AB	1				EV0			RADIATOR, Engine Cooling
2	52079778AA	1				EV0			CAP, Radiator
3									ISOLATOR, Radiator
	52079419	2				EV0			Upper
	52079884AA	2				EV0			Sides
4	52028466	1				EV0			DRAINCOCK, Radiator
5	55115918AC	1				EV0			CONDENSER, Air Conditioning
6	52079860AA	1				EV0			SHROUD, Fan, Contains: Fan, Motor and Shroud
-7	05102210AA	1				EV0			SOLENOID, Hydraulic Fan Control
8	05019708AB	1				EV0			HOSE PACKAGE, Hydraulic Fan
-9	52088914AA	1				EV0			FITTING, Quick Disconnect
-10	05019705AA	1				EV0			O RING
11	52089505AD	1				EV0			HOSE, Power Steering Pressure
-12	52089505AD	1							NUT, M16x1.5, (NOT SERVICED)
13	05205254	2				EV0			O RING, Power Steering Hose
14	52079929AB	1				EV0			CLIP, Line
-15	52080135AA	1				EV0			HARNESS, Jumper
-16	52079632AA	1				EV0			CLAMP, Oil Cooler Tube
-17	04026139	1				EV0			HOSE, Oil Cooler
18	04026139	1							HOSE, Drain, (NOT SERVICED)
19	52079861AA	1				EV0			TUBE, Oil Cooler, Cooling, Pressure
20	52079862AA	1				EV0			TUBE, Oil Cooler, Cooling, Return
21	52079892AC	1				EV0			TUBE, Oil Cooler, Power Steering, Pressure
22	52079893AB	1				EV0			TUBE, Oil Cooler, Power Steering, Return
-23	52079948AB	1				EV0			COOLER, Power Steering
-24	04546594	1				EV0			SLEEVE, Braided Expandable
25	52079886AA	1				EV0			SEAL, Radiator Condenser
26	52079887AA	1				EV0			SEAL, RadiatorLeft
27	52079888AA	1				EV0			SEAL, RadiatorRight

GRAND CHEROKEE (WJ)

SERIES	LINE	BODY	ENGINE	TRANSMISSION
H = Laredo	T = JEEP - 2WD	74 = SPORT UTILITY 4-DR	ERH = Engine - 4.0L Power Tech I-6	DGK = 4 Speed Auto, 42RE
M = Sport	J = JEEP - 4WD		EVA = Engine- 4.7L V8 MPI	DGQ = 5 Speed Auto, 45RFE
P = Limited	U = JEEP - 4WD (RHD)		EVC = Engine - 4.7L HO V8 MPI	DG0 = All Automatic Transmissions
S = Overland			ER0 = All 4.0L 6 Cyl. Gas	
			EV0 = All 4.7L Gas	

Radiator and Related Parts 4.7L Engine
Figure 7-160

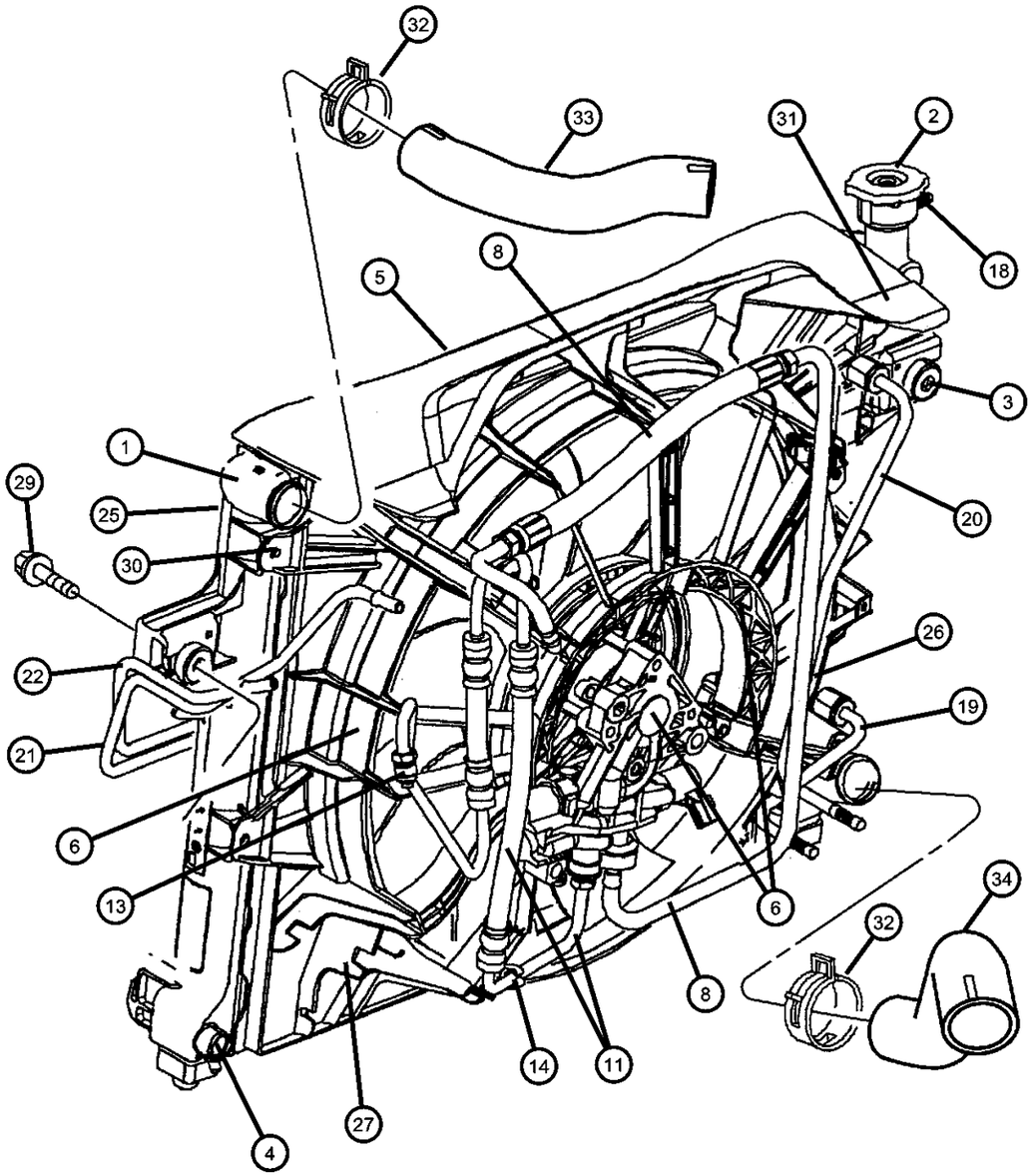

ITEM	PART NUMBER	QTY	LINE	SERIES	BODY	ENGINE	TRANS	TRIM	DESCRIPTION
-28	06505172AA	4				EV0			U-NUT, M6x1.00
29	06102117AA	4				EV0			SCREW AND WASHER, Hex Head, M6x1x20
30	J4004262	4				EV0			PIN, Push, .15x.41
31	53030960	1				EV0			LABEL, Belt Routing
32	52005580	1				ER0, EV0			CLAMP, Hose to Radiator
33	52079872AA	1				EV0			HOSE, Radiator Inlet
34	52079873AA	1				EV0			HOSE, Radiator Outlet

GRAND CHEROKEE (WJ)

SERIES	LINE	BODY	ENGINE	TRANSMISSION
H = Laredo M = Sport P = Limited S = Overland	T = JEEP - 2WD J = JEEP - 4WD U = JEEP - 4WD (RHD)	74 = SPORT UTILITY 4-DR	ERH = Engine - 4.0L Power Tech I-6 EVA = Engine- 4.7L V8 MPI EVC = Engine - 4.7L HO V8 MPI ER0 = All 4.0L 6 Cyl. Gas EV0 = All 4.7L Gas	DGK = 4 Speed Auto, 42RE DGQ = 5 Speed Auto, 45RFE DG0 = All Automatic Transmissions

AR = use ase required - = Non illustrrated part

Radiator Upper Support
Figure 7-170

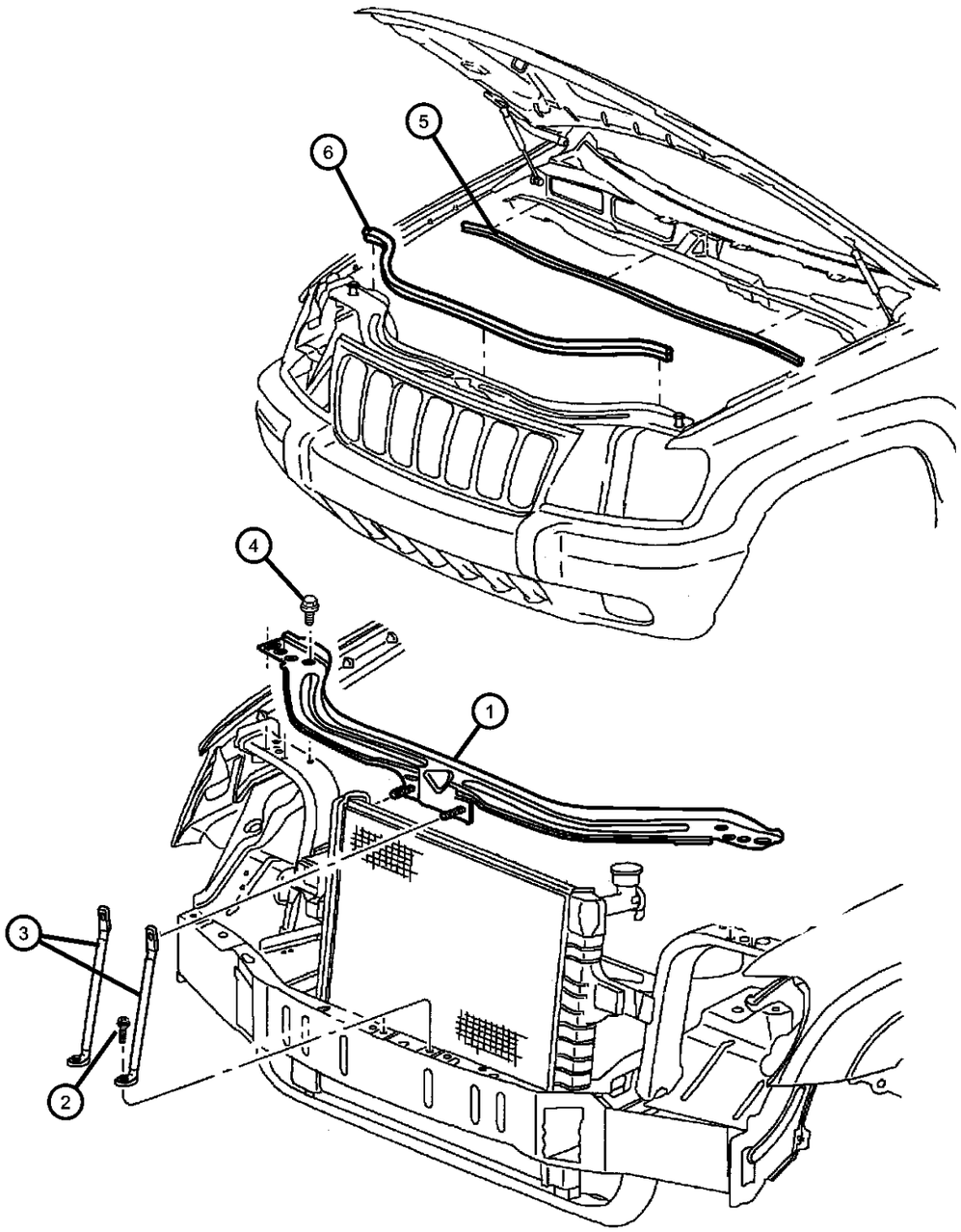

ITEM	PART NUMBER	QTY	LINE	SERIES	BODY	ENGINE	TRANS	TRIM	DESCRIPTION
1	52079416	1							CROSSMEMBER, Radiator
2	52079416	1							SCREW, Round Head, M6x1x25, (NOT SERVICED)
3	55136273AB	1							BRACE, Radiator Crossmember
4	06505814AA	4							SCREW, M8x1.25x20
5	55135392AB	1							SEAL, Hood To Plenum
6	55135398AB	1							SEAL, Hood

GRAND CHEROKEE (WJ)

SERIES	LINE	BODY	ENGINE	TRANSMISSION
H = Laredo M = Sport P = Limited S = Overland	T = JEEP - 2WD J = JEEP - 4WD U = JEEP - 4WD (RHD)	74 = SPORT UTILITY 4-DR	ERH = Engine - 4.0L Power Tech I-6 EVA = Engine- 4.7L V8 MPI EVC = Engine - 4.7L HO V8 MPI ER0 = All 4.0L 6 Cyl. Gas EV0 = All 4.7L Gas	DGK = 4 Speed Auto, 42RE DGQ = 5 Speed Auto, 45RFE DG0 = All Automatic Transmissions

AR = use ase required - = Non illustrrated part

Water Pump and Related Parts 4.0L Engine
Figure 7-210

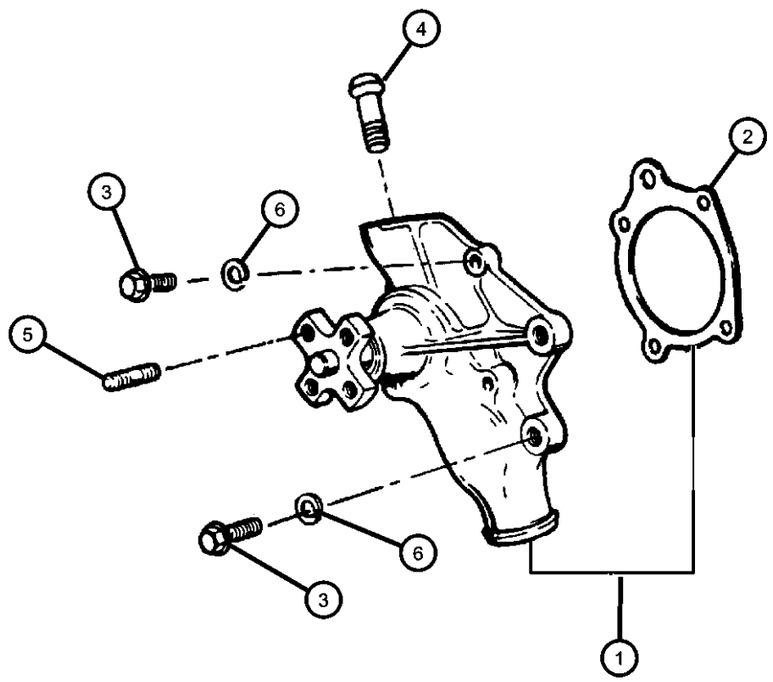

ITEM	PART NUMBER	QTY	LINE	SERIES	BODY	ENGINE	TRANS	TRIM	DESCRIPTION
Note: Sales Code ER0 = 4.0L Engine									
1	05012366AA	1				ER0			PUMP PACKAGE, Water
2	53010419	1				ER0			GASKET, Water Pump
3	53010419	1							SCREW AND WASHER, Hex Head, .312-18x1.75, (NOT SERVICED)
4	53007978	1				ER0			TUBE, Water Pump Heater Return
5	53007978	1							STUD, .312-18/.312-24x1.250, (NOT SERVICED)
6	05013014AA	1	J			ER0			WASHER

GRAND CHEROKEE (WJ)

SERIES	LINE	BODY	ENGINE	TRANSMISSION
H = Laredo M = Sport P = Limited S = Overland	T = JEEP - 2WD J = JEEP - 4WD U = JEEP - 4WD (RHD)	74 = SPORT UTILITY 4-DR	ERH = Engine - 4.0L Power Tech I-6 EVA = Engine- 4.7L V8 MPI EVC = Engine - 4.7L HO V8 MPI ER0 = All 4.0L 6 Cyl. Gas EV0 = All 4.7L Gas	DGK = 4 Speed Auto, 42RE DGQ = 5 Speed Auto, 45RFE DG0 = All Automatic Transmissions

Water Pump and Related Parts 4.7L Engine
Figure 7-220

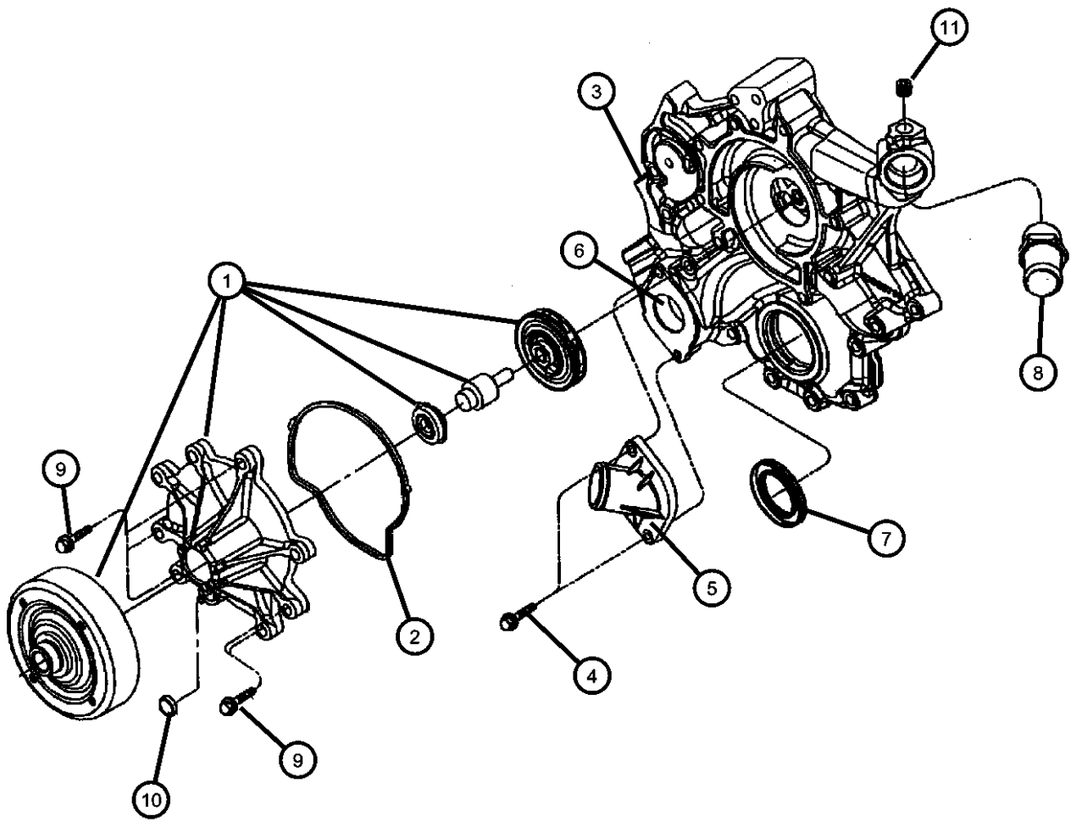

ITEM	PART NUMBER	QTY	LINE	SERIES	BODY	ENGINE	TRANS	TRIM	DESCRIPTION
Note: Sales Code EV0 = 4.7L Engine									
1	53020873AC	1				EV0			PUMP, Water
2	53020865	1				EV0			GASKET, Water Pump
3	06035854	2				EV0			FITTING, Y-Style
4	06505502AA	2				EV0			SCREW
5	53020887AB	1				EV0			HOUSING, Thermostat
6	52079476AB	1				EV0			THERMOSTAT, with Seal
7	53021313AA	1				EV0			SEAL, Crankshaft Oil, Front
8	53021313AA	1							PIPE FITTING, Chain Case Cover, .375-18x2, (NOT SERVICED)
9	53021313AA	1							SCREW, M6x1x25, (NOT SERVICED)
10	53021313AA	1							PLUG, (NOT SERVICED)
11	53021313AA	1							PLUG, (NOT SERVICED)

GRAND CHEROKEE (WJ)

SERIES	LINE	BODY	ENGINE	TRANSMISSION
H = Laredo M = Sport P = Limited S = Overland	T = JEEP - 2WD J = JEEP - 4WD U = JEEP - 4WD (RHD)	74 = SPORT UTILITY 4-DR	ERH = Engine - 4.0L Power Tech I-6 EVA = Engine- 4.7L V8 MPI EVC = Engine - 4.7L HO V8 MPI ER0 = All 4.0L 6 Cyl. Gas EV0 = All 4.7L Gas	DGK = 4 Speed Auto, 42RE DGQ = 5 Speed Auto, 45RFE DG0 = All Automatic Transmissions

Coolant Tank, 4.0,4.7L Engine
Figure 7-310

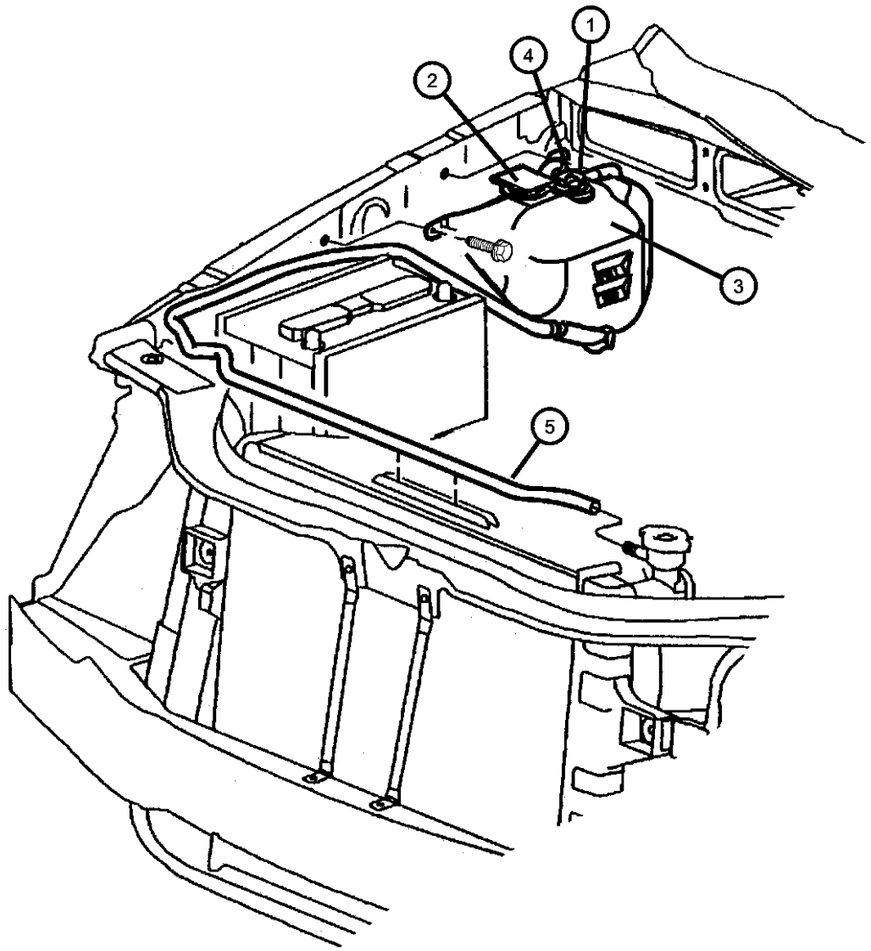

ITEM	PART NUMBER	QTY	LINE	SERIES	BODY	ENGINE	TRANS	TRIM	DESCRIPTION
Note: Sales Code ER0 = 4.0L Engine									
Note: Sales Code EV0 = 4.7L Engine									
1									GROMMET
	52028254	1				EV0			
		1				ER0			Sensor Mtg
2	52079331	1				ER0			CAP, Coolant Reserve Tank
3									BOTTLE, Coolant Recovery
	52079461AB	1				EV0			
		1				ER0			
4	52079468	1				ER0			SENSOR, Coolant Level
5	04026148	1				EV0			HOSE, Coolant Reserve Tank

GRAND CHEROKEE (WJ)

SERIES	LINE	BODY	ENGINE	TRANSMISSION
H = Laredo M = Sport P = Limited S = Overland	T = JEEP - 2WD J = JEEP - 4WD U = JEEP - 4WD (RHD)	74 = SPORT UTILITY 4-DR	ERH = Engine - 4.0L Power Tech I-6 EVA = Engine- 4.7L V8 MPI EVC = Engine - 4.7L HO V8 MPI ER0 = All 4.0L 6 Cyl. Gas EV0 = All 4.7L Gas	DGK = 4 Speed Auto, 42RE DGQ = 5 Speed Auto, 45RFE DG0 = All Automatic Transmissions

Drive Pulleys 4.0L Engine
Figure 7-420

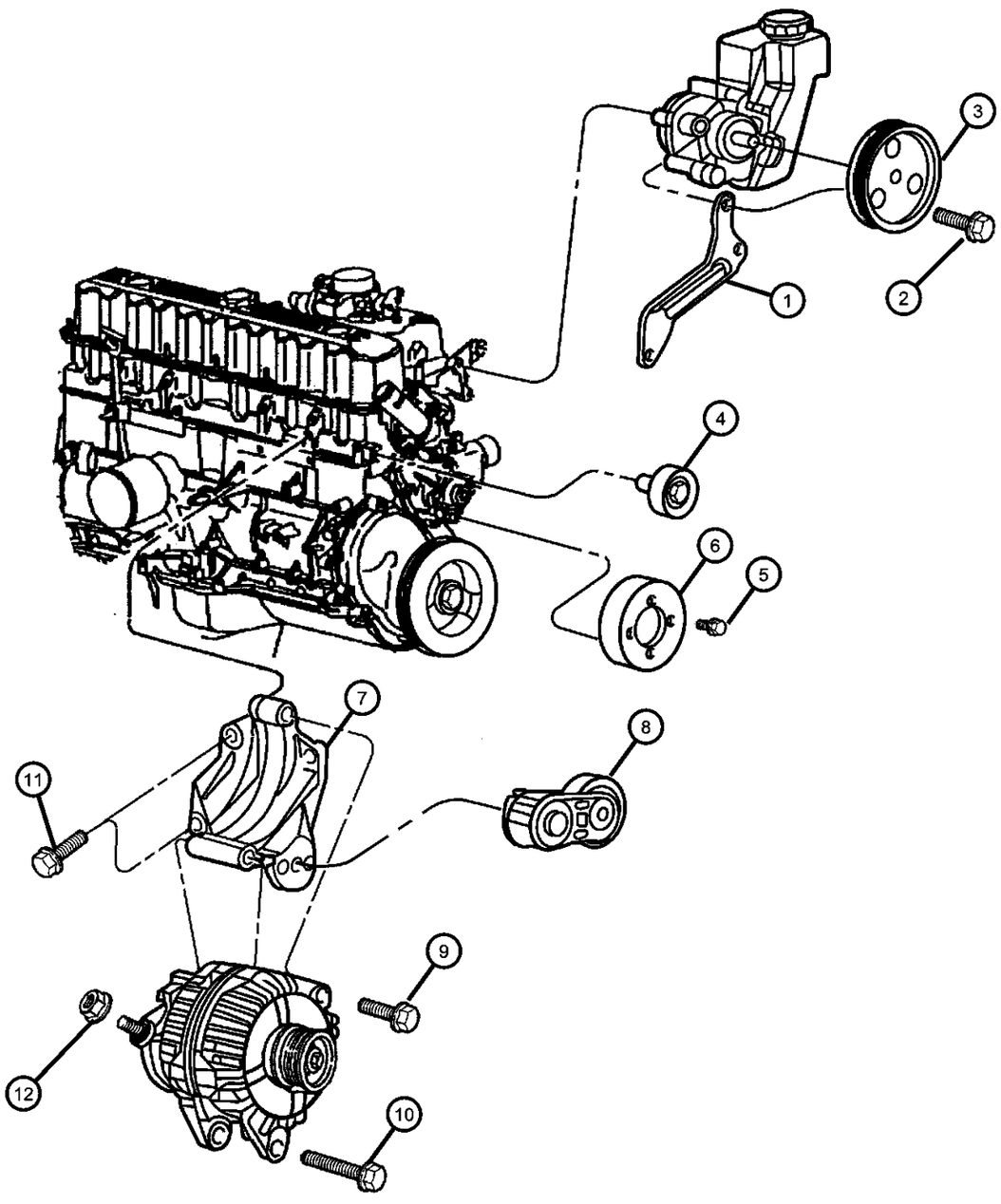

ITEM	PART NUMBER	QTY	LINE	SERIES	BODY	ENGINE	TRANS	TRIM	DESCRIPTION
Note: Sales Code ER0 = All 4.0L Engines EV0 = All 4.7L Engines									
1	04854157	1				ER0			BRACE, Power Steering Pump
2	06502425	3				ER0			SCREW AND WASHER, Hex Head, M8x1.25x95
3	53010258AB	1				ER0			PULLEY, Power Steering Pump
4	04854092	1				ER0			PULLEY, Idler
5	06034860	4				ER0			BOLT AND WASHER, Implement Attaching
6	04854032	1				ER0			PULLEY, Water Pump
7	04854026	1				ER0			BRACKET, Alternator
8	04854089AB	1				ER0			TENSIONER, Alternator Belt
9	06505488AA	1				ER0			SCREW AND WASHER, Hex
10	06504344	1				ER0			SCREW AND WASHER, Hex Head
11	00154854AA	4				ER0			SCREW AND WASHER, Hex
12	00154854AA	4							NUT, M8x1.25, (NOT SERVICED)

GRAND CHEROKEE (WJ)

SERIES	LINE	BODY	ENGINE	TRANSMISSION
H = Laredo M = Sport P = Limited S = Overland	T = JEEP - 2WD J = JEEP - 4WD U = JEEP - 4WD (RHD)	74 = SPORT UTILITY 4-DR	ERH = Engine - 4.0L Power Tech I-6 EVA = Engine- 4.7L V8 MPI EVC = Engine - 4.7L HO V8 MPI ER0 = All 4.0L 6 Cyl. Gas EV0 = All 4.7L Gas	DGK = 4 Speed Auto, 42RE DGQ = 5 Speed Auto, 45RFE DG0 = All Automatic Transmissions

Drive Pulleys 4.7L Engine
Figure 7-430

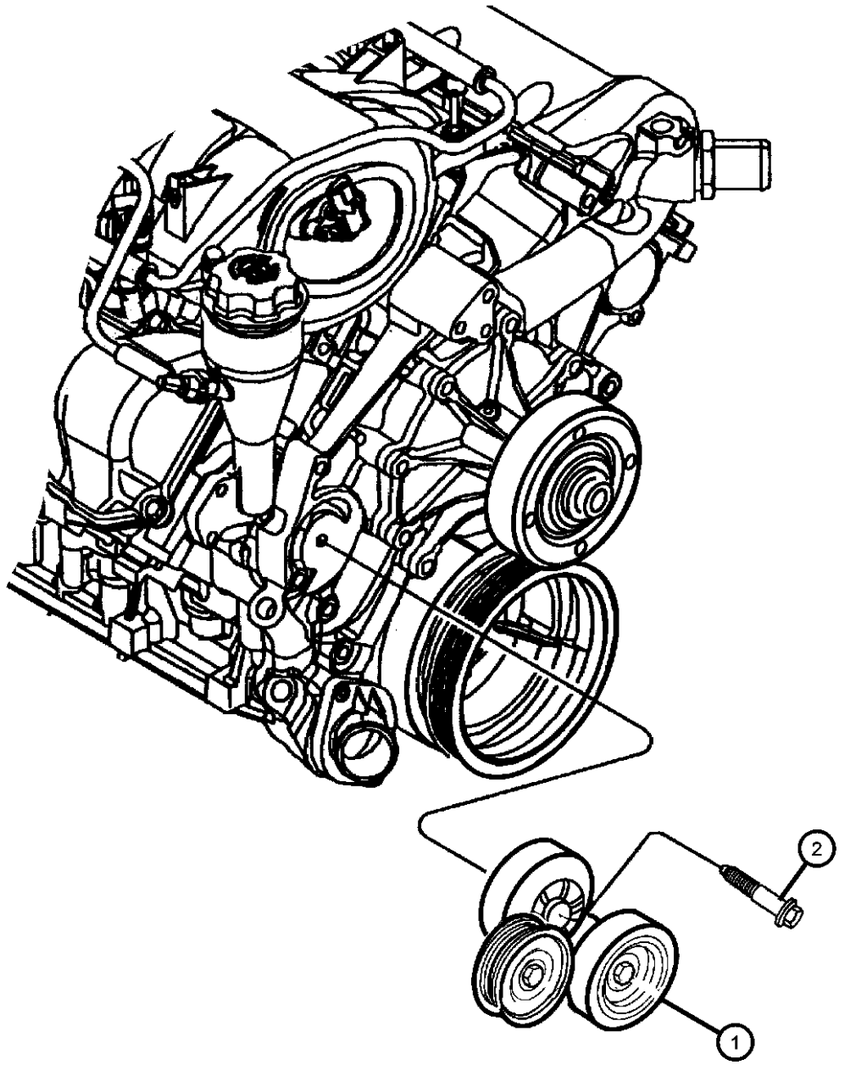

ITEM	PART NUMBER	QTY	LINE	SERIES	BODY	ENGINE	TRANS	TRIM	DESCRIPTION
Note: Sales Code EV0 = 4.7L Engine									
1	53030958	1				EV0			TENSIONER, Alternator Belt
2	06504930AA	1				EV0			SCREW AND WASHER, Hex Head, M10x1.5x70

GRAND CHEROKEE (WJ)

SERIES	LINE	BODY	ENGINE	TRANSMISSION
H = Laredo M = Sport P = Limited S = Overland	T = JEEP - 2WD J = JEEP - 4WD U = JEEP - 4WD (RHD)	74 = SPORT UTILITY 4-DR	ERH = Engine - 4.0L Power Tech I-6 EVA = Engine- 4.7L V8 MPI EVC = Engine - 4.7L HO V8 MPI ER0 = All 4.0L 6 Cyl. Gas EV0 = All 4.7L Gas	DGK = 4 Speed Auto, 42RE DGQ = 5 Speed Auto, 45RFE DG0 = All Automatic Transmissions

AR = use ase required - = Non illustrrated part

Drive Belts 4.0L and 4.7L Engines
Figure 7-520

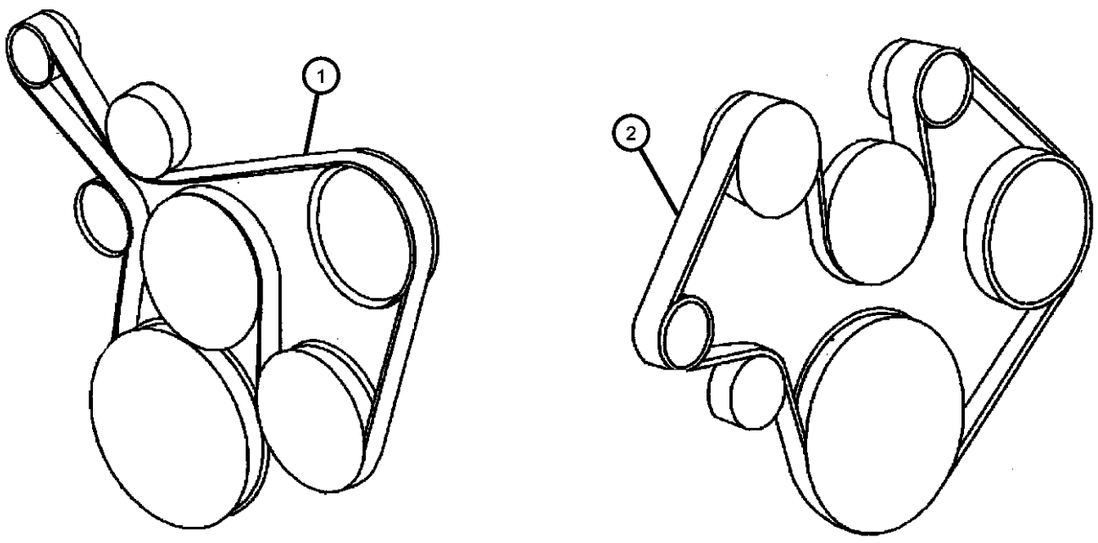

ITEM	PART NUMBER	QTY	LINE	SERIES	BODY	ENGINE	TRANS	TRIM	DESCRIPTION
Note: Sales Code ER0 = 4.0L Engine									
Note: Sales Code EV0 = 4.7L Engine									
1	04854033AB	1				ER0			BELT, Accessory Drive
2	53032037AC	1				EV0			BELT, Accessory Drive

GRAND CHEROKEE (WJ)

SERIES	LINE	BODY	ENGINE	TRANSMISSION
H = Laredo M = Sport P = Limited S = Overland	T = JEEP - 2WD J = JEEP - 4WD U = JEEP - 4WD (RHD)	74 = SPORT UTILITY 4-DR	ERH = Engine - 4.0L Power Tech I-6 EVA = Engine- 4.7L V8 MPI EVC = Engine - 4.7L HO V8 MPI ER0 = All 4.0L 6 Cyl. Gas EV0 = All 4.7L Gas	DGK = 4 Speed Auto, 42RE DGQ = 5 Speed Auto, 45RFE DG0 = All Automatic Transmissions

Oil Cooler and Lines 4.0L Engines
Figure 7-610

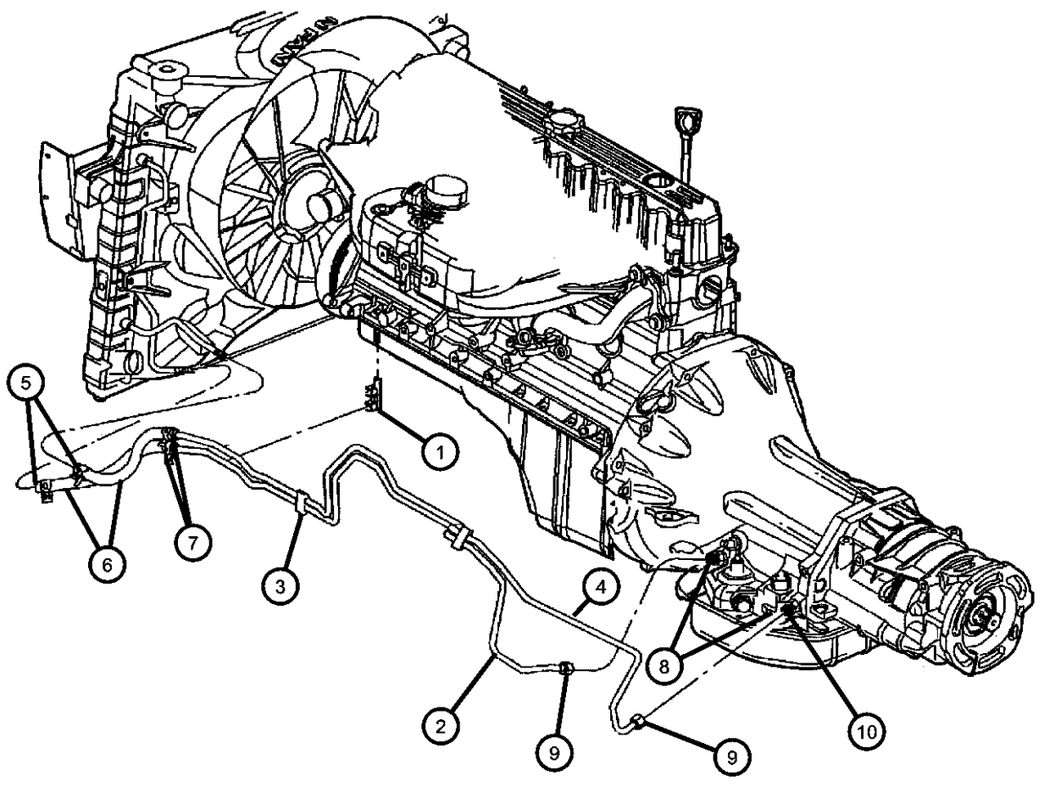

ITEM	PART NUMBER	QTY	LINE	SERIES	BODY	ENGINE	TRANS	TRIM	DESCRIPTION
Note ER0 = 4.0L Engine DGK = 42RE, Auto Trans									
1	52079789AA	1					DG0		BRACKET, Transmission Oil Cooler
2	52079369	1				ER0	DG0		TUBE, Oil Cooler
3	04815987AA	2				ER0	DG0		CLIP, Power Steering Hose
4	52079782AB	1				ER0	DG0		TUBE, Oil Cooler
5	52079631AA	1				ER0	DG0		CLAMP, Oil Cooler Tube
6	04026139	1				ER0	DG0		HOSE, Oil Cooler, Roll Stock
7	52079632AA	1				ER0	DG0		CLAMP, Oil Cooler Tube
8									VALVE, Oil Cooler Pressure
	52028463AB	1				ER0	DG0		Pressure
	55116910AA	1				ER0	DG0		Return
9	06035503	3				ER0	DG0		NUT, .625-18
10									NUT, Transmission Case
	04799433AB	2	T				DGQ		
		2	J				DGQ		

GRAND CHEROKEE (WJ)

SERIES	LINE	BODY	ENGINE	TRANSMISSION
H = Laredo M = Sport P = Limited S = Overland	T = JEEP - 2WD J = JEEP - 4WD U = JEEP - 4WD (RHD)	74 = SPORT UTILITY 4-DR	ERH = Engine - 4.0L Power Tech I-6 EVA = Engine- 4.7L V8 MPI EVC = Engine - 4.7L HO V8 MPI ER0 = All 4.0L 6 Cyl. Gas EV0 = All 4.7L Gas	DGK = 4 Speed Auto, 42RE DGQ = 5 Speed Auto, 45RFE DG0 = All Automatic Transmissions

Oil Cooler and Lines 4.7L Engine
Figure 7-620

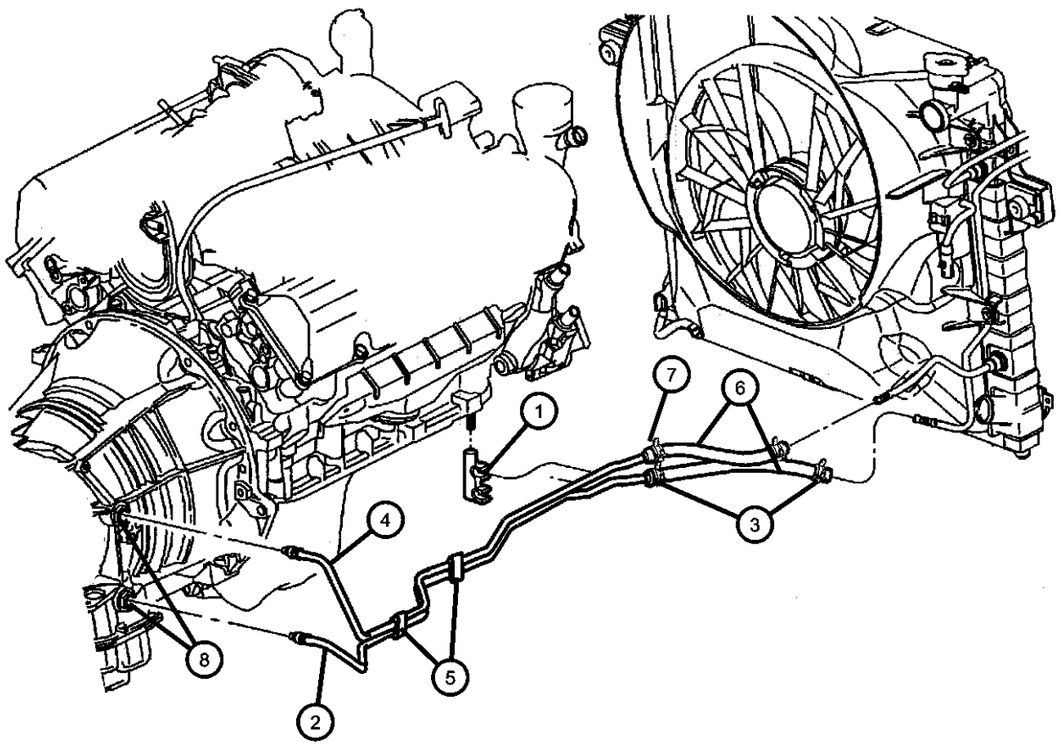

ITEM	PART NUMBER	QTY	LINE	SERIES	BODY	ENGINE	TRANS	TRIM	DESCRIPTION
Note:									
EV0 = 4.7L Engine									
DG0 = All Automatic Transmissions									
1	52079789AA	1					DG0		BRACKET, Transmission Oil Cooler
2	52079375	1				EV0	DG0		TUBE, Oil Cooler, Pressure
3	04815987AA	2				EV0	DG0		CLIP, Power Steering Hose
4	52079783AA	1				EV0	DG0		TUBE, Oil Cooler, Return
5	52079631AA	1				EV0	DG0		CLAMP, Oil Cooler Tube
6	04026139	1				EV0	DG0		HOSE, Oil Cooler
7	52079631AA	1				EV0	DG0		CLAMP, Oil Cooler Tube
8									NUT, Transmission Case
	04799433AB	2	T				DGQ		
		2	J				DGQ		

GRAND CHEROKEE (WJ)

SERIES	LINE	BODY	ENGINE	TRANSMISSION
H = Laredo M = Sport P = Limited S = Overland	T = JEEP - 2WD J = JEEP - 4WD U = JEEP - 4WD (RHD)	74 = SPORT UTILITY 4-DR	ERH = Engine - 4.0L Power Tech I-6 EVA = Engine- 4.7L V8 MPI EVC = Engine - 4.7L HO V8 MPI ER0 = All 4.0L 6 Cyl. Gas EV0 = All 4.7L Gas	DGK = 4 Speed Auto, 42RE DGQ = 5 Speed Auto, 45RFE DG0 = All Automatic Transmissions

Grille and Related Parts
Figure 7-720

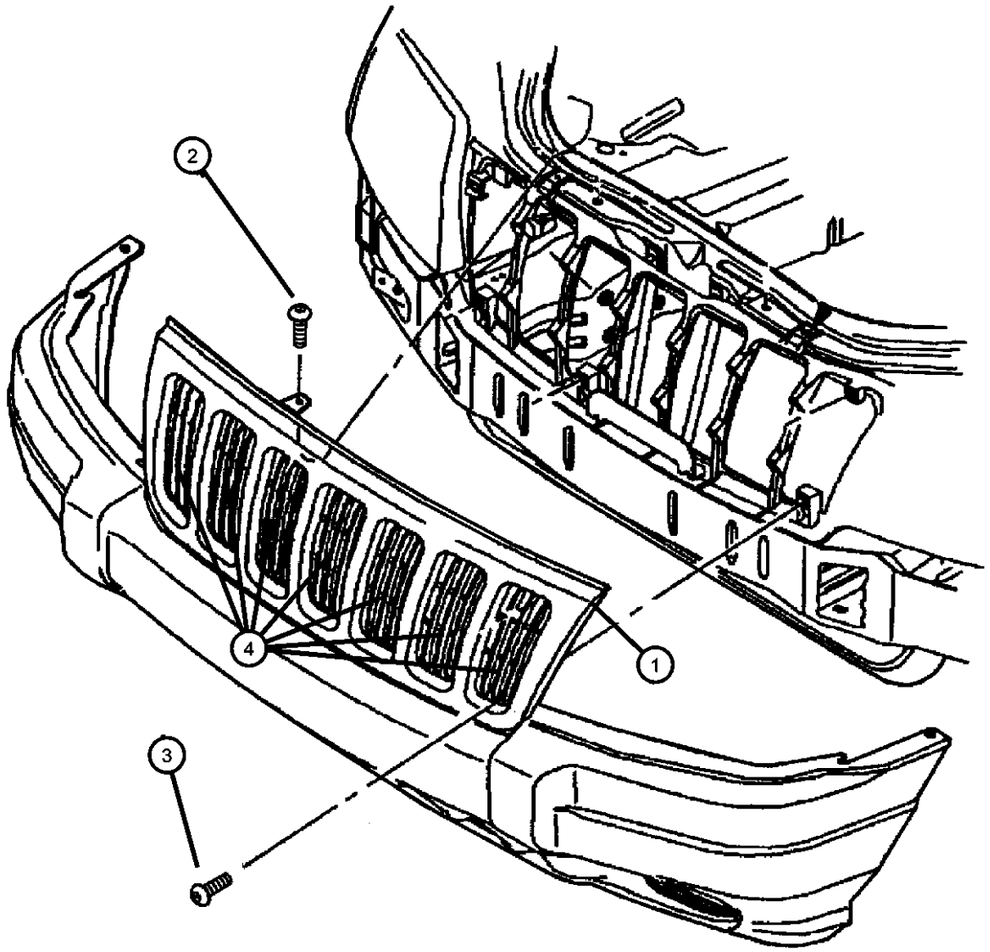

ITEM	PART NUMBER	QTY	LINE	SERIES	BODY	ENGINE	TRANS	TRIM	DESCRIPTION
1									GRILLE, Fascia
	55155921AA	1							Chrome
	5GL79AXRAA	1							XR, with Chrome Rings
	5GL79DX8AA	1							X8, with Chrome Rings
	5GL79SW1AA	1							W1, with Chrome Rings
	5GL79WB-TAA	1							BT, with Chrome Rings
	5GL79WE-LAA	1							EL, with Chrome Rings
	5GL79WS-BAA	1							SB, with Chrome Rings
	5GL79XBQAA	1							BQ, with Chrome Rings
	5GL79XRVAA	1							RV, with Chrome Rings
	5GL79XS5AA	1							S5, with Chrome Rings
	5GL79YFFAA	1							FF, with Chrome Rings
	5GL79YJRAA	1							JR, with Chrome Rings
	5GL79YUBAA	1							UB, with Chrome Rings
	5GL79ZDRAA	1							DR, with Chrome Rings
2	06505813AA	2							SCREW, Hex Flange Head
3	06505813AA	2							SCREW, (NOT SERVICED)
4									GRILLE, Texture
	5FT35DX9	1							
	5FT35VF7	1							Overland

GRAND CHEROKEE (WJ)

SERIES	LINE	BODY	ENGINE	TRANSMISSION
H = Laredo	T = JEEP - 2WD	74 = SPORT UTILITY 4-DR	ERH = Engine - 4.0L Power Tech I-6	DGK = 4 Speed Auto, 42RE
M = Sport	J = JEEP - 4WD		EVA = Engine- 4.7L V8 MPI	DGQ = 5 Speed Auto, 45RFE
P = Limited	U = JEEP - 4WD (RHD)		EVC = Engine - 4.7L HO V8 MPI	DG0 = All Automatic Transmissions
S = Overland			ER0 = All 4.0L 6 Cyl. Gas	
			EV0 = All 4.7L Gas	

Group - 8

Electrical

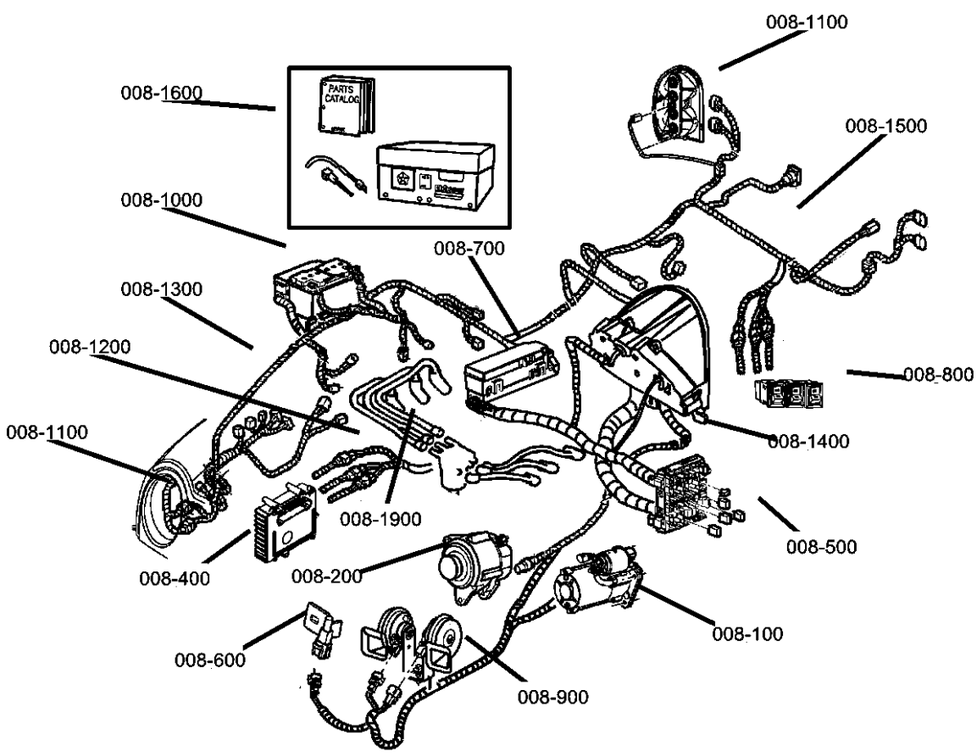

008-1900 Spark Plugs-Cables-Coils 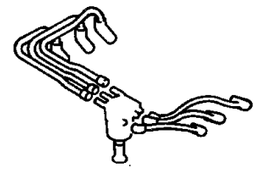	**008-200** Alternators 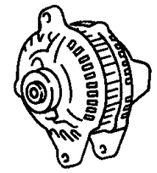	**008-400** Modules 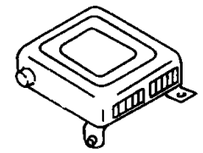	**008-500** Relays 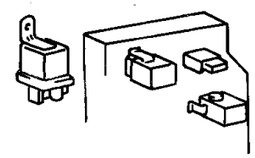
008-600 Sensors 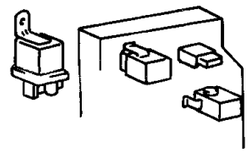	**008-700** Single Board Engine Controllers 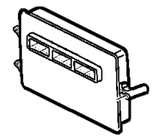	**008-800** Switches 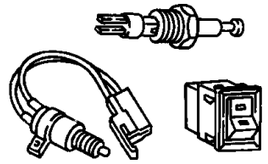	**008-900** Horns 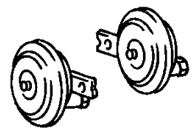

008-100 Starters 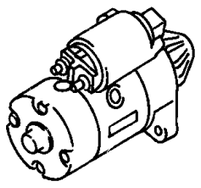	**008-1000** Battery Tray and Cables 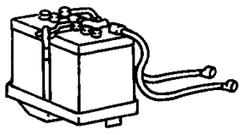	**008-1100** Lamps - Front, Rear and Courtesy 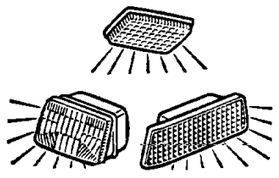	**008-1200** Wiring-Engine & Related Parts 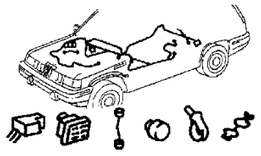
008-1300 Wiring-Headlamp to Dash 	**008-1400** Wiring-Instrument Panel 	**008-1500** Wiring-Body & Accessories 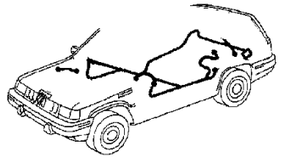	**008-1600** Wiring Repair **WIRING REPAIR PKG.**

Group - 8 Electrical

Illustration Title — Group-Fig. No.

Starters
Starters ..... Fig. 8 - 110

Alternators
Alternator and Mounting 4.0L Engine [ER0] ..... Fig. 8 - 205
Alternator and Mounting 4.7L Engine [EV0] ..... Fig. 8 - 210

Modules
Modules ..... Fig. 8 - 410

Relays
Power Distribution Center, Fuses and Relays ..... Fig. 8 - 505
Junction Block, Relays, Circuit Breaker ..... Fig. 8 - 510

Sensors
Sensors, Engine (4.0L) [ER0] ..... Fig. 8 - 605
Sensors, Engine (4.7L) [EV0] ..... Fig. 8 - 610
Sensors Drivetrain ..... Fig. 8 - 615
Sensors Body ..... Fig. 8 - 620

Single Board Engine Controllers
JTEC Modules and Solenoids ..... Fig. 8 - 710

Switches
Switches (Instrument Panel and Console) ..... Fig. 8 - 810
Switches, (Drive Train) ..... Fig. 8 - 820
Switches, (Body) ..... Fig. 8 - 830

Horns
Horns ..... Fig. 8 - 910

Battery Tray and Cables
Battery Tray & Cables ..... Fig. 8 - 1010

Lamps - Front, Rear and Courtesy
Lamp - Front End ..... Fig. 8 - 1110
Lamp - Rear End ..... Fig. 8 - 1120
Lamp - Courtesy - Dome - Reading ..... Fig. 8 - 1130
Bulbs & Sockets ..... Fig. 8 - 1140

Wiring-Engine & Related Parts
Wiring - Engine & Related Parts 4.0 Engine ..... Fig. 8 - 1210
Wiring Engine and Related Parts 4.7 Engine ..... Fig. 8 - 1220

Wiring-Headlamp to Dash
Wiring - Headlamp / Dash ..... Fig. 8 - 1310

Wiring-Instrument Panel
Wiring - Instrument Panel ..... Fig. 8 - 1410

Wiring-Body & Accessories
Wiring - Body & Acessories ..... Fig. 8 - 1510

Wiring Repair
Wiring Repair Packages ..... Fig. 8 - 1605
Power Distribution Center Repair ..... Fig. 8 - 1610

Spark Plugs-Cables-Coils
Spark Plugs - Coils ..... Fig. 8 - 1910

Starters
Figure 8-110

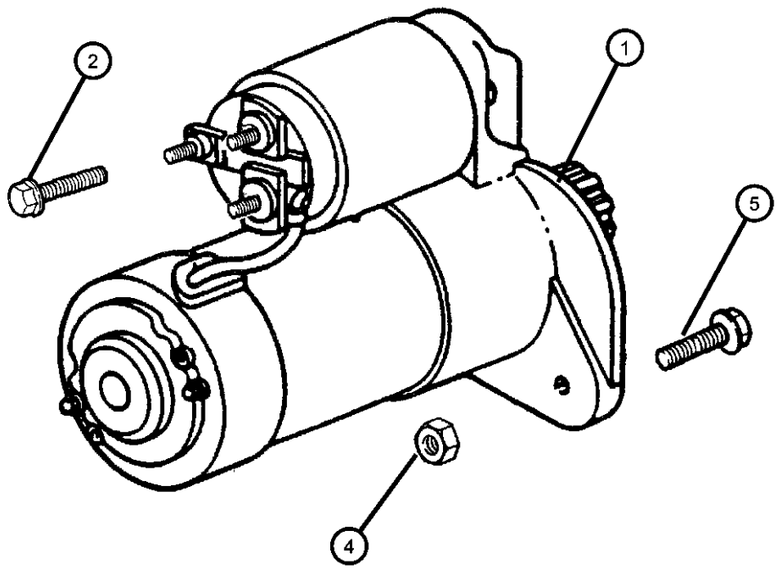

ITEM	PART NUMBER	QTY	LINE	SERIES	BODY	ENGINE	TRANS	TRIM	DESCRIPTION
Notes:									
[ER0]=4.0L Engine									
[EV0]=4.7L Engine									
[DGQ]=5 Speed Automatic Transmission									
1									STARTER
	56041012AB	1				ER0			
	R6041012AC								Mopar Remanufactured Part
	56041207AB	1				EV0			
2	J4006192	1				ER0			BOLT AND WASHER, Hex Head, .375-16x1.75
-3	06102084AA	2				EV0			SCREW
4	06102084AA	2							NUT, M8x1.25, (NOT SERVICED)
5	06503699	1				ER0			SCREW AND WASHER, Hex Head, M10x1.5x28
-6	52104133	1					DGQ		COVER, Transmission Dust

GRAND CHEROKEE (WJ)

SERIES	LINE	BODY	ENGINE	TRANSMISSION
H = Laredo	T = JEEP - 2WD	74 = SPORT UTILITY 4-DR	ERH = Engine - 4.0L Power Tech I-6	DGK = 4 Speed Auto, 42RE
M = Sport	J = JEEP - 4WD		EVA = Engine- 4.7L V8 MPI	DGQ = 5 Speed Auto, 45RFE
P = Limited	U = JEEP - 4WD (RHD)		EVC = Engine - 4.7L HO V8 MPI	DG0 = All Automatic Transmissions
S = Overland			ER0 = All 4.0L 6 Cyl. Gas	
			EV0 = All 4.7L Gas	

Alternator and Mounting 4.0L Engine [ER0]
Figure 8-205

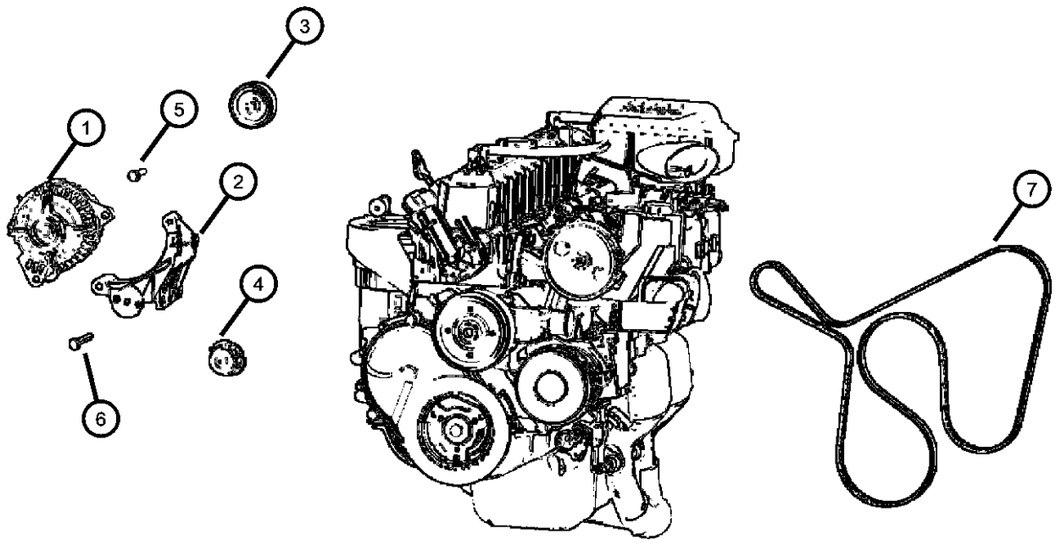

ITEM	PART NUMBER	QTY	LINE	SERIES	BODY	ENGINE	TRANS	TRIM	DESCRIPTION
Notes: [ER0]=4.0L Engine									
1	56041322AB	1				ER0			ALTERNATOR
2	04854026	1				ER0			BRACKET, Alternator
3	04854089AB	1				ER0			TENSIONER, Alternator Belt
4	04854092	1				ER0			PULLEY, Idler
5	00154854AA	4				ER0			SCREW AND WASHER, Hex
6	06504344	1				ER0			SCREW AND WASHER, Hex Head
7	04854033AB	1				ER0			BELT, Accessory Drive

GRAND CHEROKEE (WJ)

SERIES	LINE	BODY	ENGINE	TRANSMISSION
H = Laredo M = Sport P = Limited S = Overland	T = JEEP - 2WD J = JEEP - 4WD U = JEEP - 4WD (RHD)	74 = SPORT UTILITY 4-DR	ERH = Engine - 4.0L Power Tech I-6 EVA = Engine- 4.7L V8 MPI EVC = Engine - 4.7L HO V8 MPI ER0 = All 4.0L 6 Cyl. Gas EV0 = All 4.7L Gas	DGK = 4 Speed Auto, 42RE DGQ = 5 Speed Auto, 45RFE DG0 = All Automatic Transmissions

Alternator and Mounting 4.7L Engine [EV0]
Figure 8-210

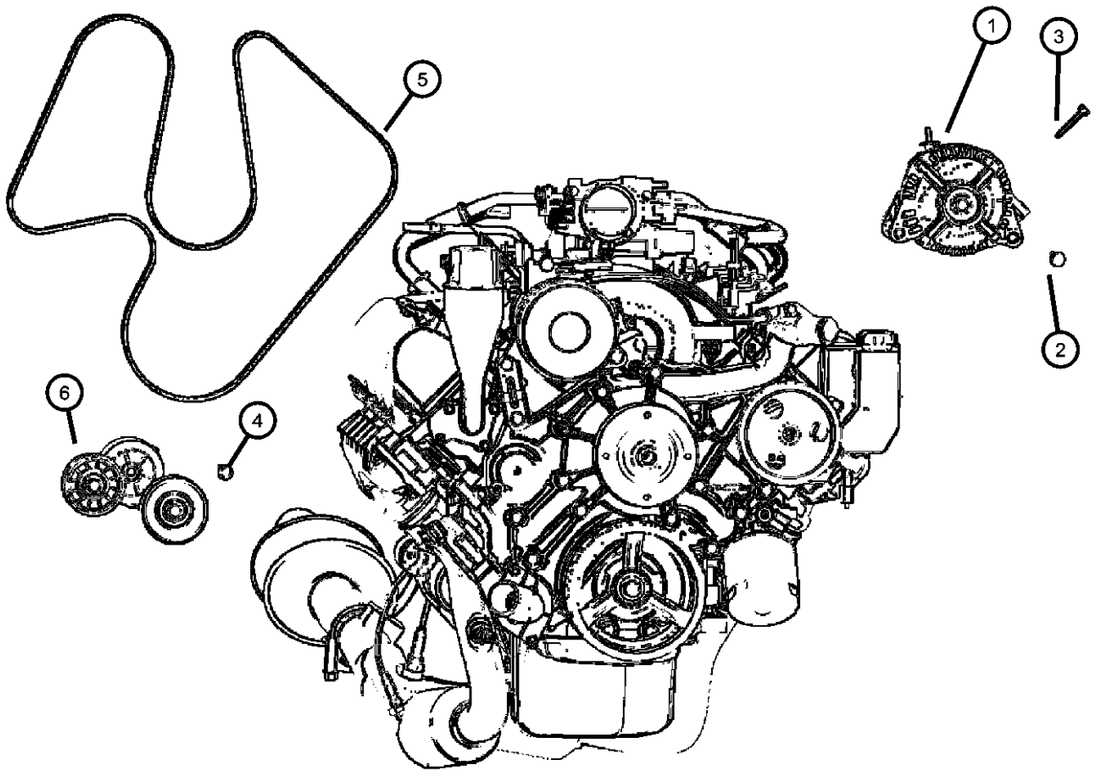

ITEM	PART NUMBER	QTY	LINE	SERIES	BODY	ENGINE	TRANS	TRIM	DESCRIPTION
Notes: [EV0]=4.7L Engine									
1	56029700AA	1				EV0			ALTERNATOR
2	06505488AA	1				EV0			SCREW AND WASHER, Hex
3	06505482AA	1				EV0			SCREW AND WASHER, Hex Head, M8x1.25x50
4	06504930AA	1				EV0			SCREW AND WASHER, Hex Head, M10x1.5x70
5	53032037AI	1				EV0			BELT, Accessory Drive
6	53030958	1				EV0			TENSIONER, Alternator Belt

GRAND CHEROKEE (WJ)

SERIES	LINE	BODY	ENGINE	TRANSMISSION
H = Laredo M = Sport P = Limited S = Overland	T = JEEP - 2WD J = JEEP - 4WD U = JEEP - 4WD (RHD)	74 = SPORT UTILITY 4-DR	ERH = Engine - 4.0L Power Tech I-6 EVA = Engine- 4.7L V8 MPI EVC = Engine - 4.7L HO V8 MPI ER0 = All 4.0L 6 Cyl. Gas EV0 = All 4.7L Gas	DGK = 4 Speed Auto, 42RE DGQ = 5 Speed Auto, 45RFE DG0 = All Automatic Transmissions

Modules
Figure 8-410

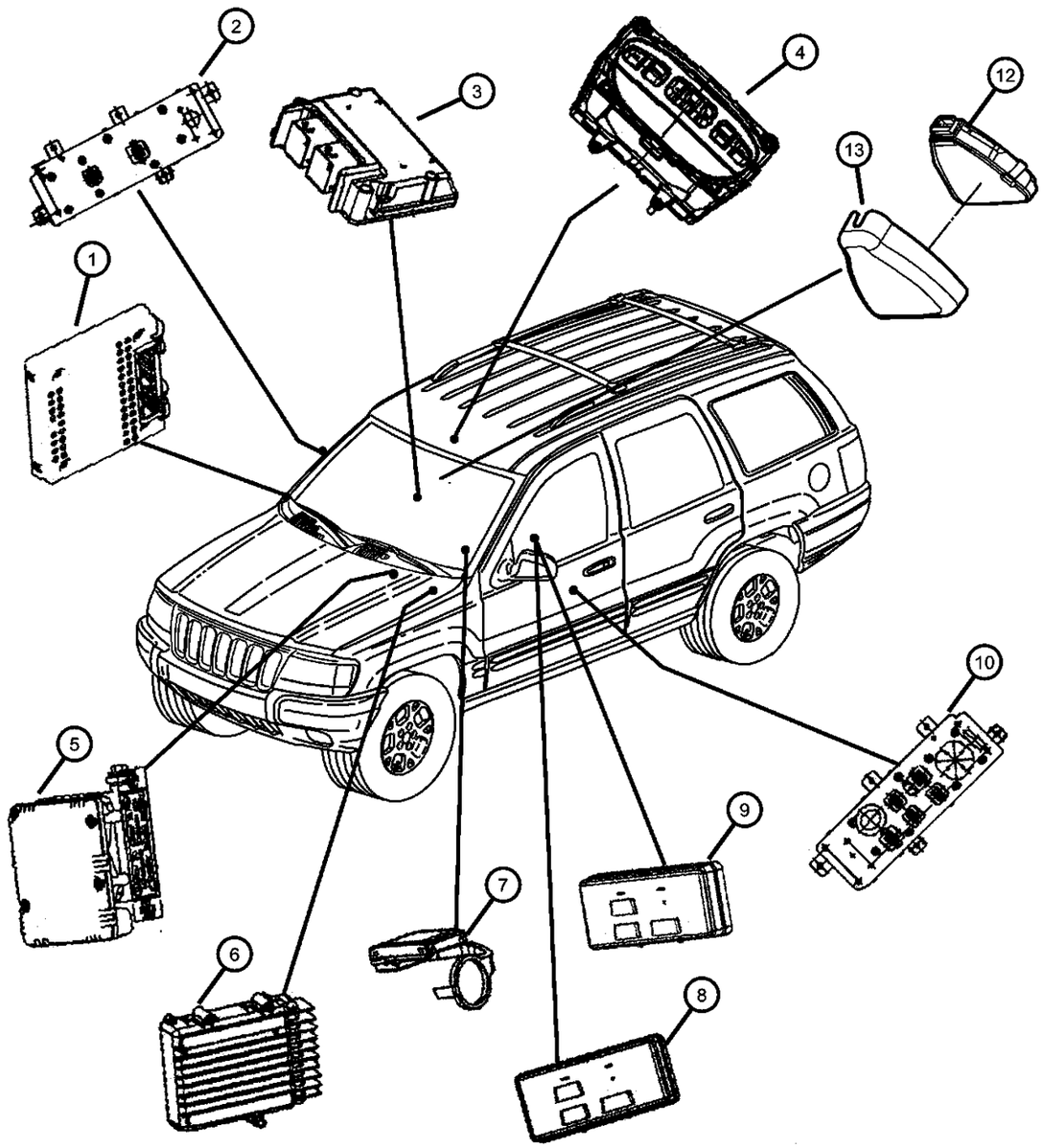

ITEM	PART NUMBER	QTY	LINE	SERIES	BODY	ENGINE	TRANS	TRIM	DESCRIPTION
Notes:									
[ER0]=4.0L Engine									
[EV0]=4.7L Engine									
[DGQ]=5 Speed Automatic Transmission									
1	05019815AF	1							MODULE, Body Controller
2									SWITCH, Door Module
	5HB62DX9AC	1		S					[DB] [DV] [L5] [T5] with Infinity Speaker System, Passenger Side
		1		P					[DB] [DV] [L5] [T5] with Six Speaker System, Passenger Side
3									MODULE, Occupant Restraint
	56010485AF	1							Without Side Airbag
	56010488AF	1							With Side Airbag
4									MODULE, Compass Temperature
	56042749AF	1							with Universal Garage Door Opener
	56042754AF	1							without Universal Garage Door Opener
	56042756AF	1							with Universal Garage Door Opener & Tire Pressure Monitor
5	05066653AA	1				ER0, EV0			MODULE, Anti-lock Brakes
6	56041905AC	1				EV0	DGQ		MODULE, Transmission Control
7	04686665AB	1							MODULE, Immobilizer
8									MODULE, Seat Memory
	56042304AG	1							without Heated Seats
	56050151AB	1							with Heated Seats
9	56050150AB	1							MODULE, Heated Seat Control
10									SWITCH, Door Module
	55196389AB	1		H					
	5HB61DX9AC	1		S					
		1		P					
-11									LABEL, Air Bag Warning
	04595748AA	1							Glovebox
	04595749AA	1							Glovebox (Canada)
	04787437AA	2							Sun Visor (Canada)
12	56042759AF	1							SENSOR, Rain

GRAND CHEROKEE (WJ)

SERIES	LINE	BODY	ENGINE	TRANSMISSION
H = Laredo	T = JEEP - 2WD	74 = SPORT UTILITY 4-DR	ERH = Engine - 4.0L Power Tech I-6	DGK = 4 Speed Auto, 42RE
M = Sport	J = JEEP - 4WD		EVA = Engine- 4.7L V8 MPI	DGQ = 5 Speed Auto, 45RFE
P = Limited	U = JEEP - 4WD (RHD)		EVC = Engine - 4.7L HO V8 MPI	DG0 = All Automatic Transmissions
S = Overland			ER0 = All 4.0L 6 Cyl. Gas	
			EV0 = All 4.7L Gas	

Modules
Figure 8-410

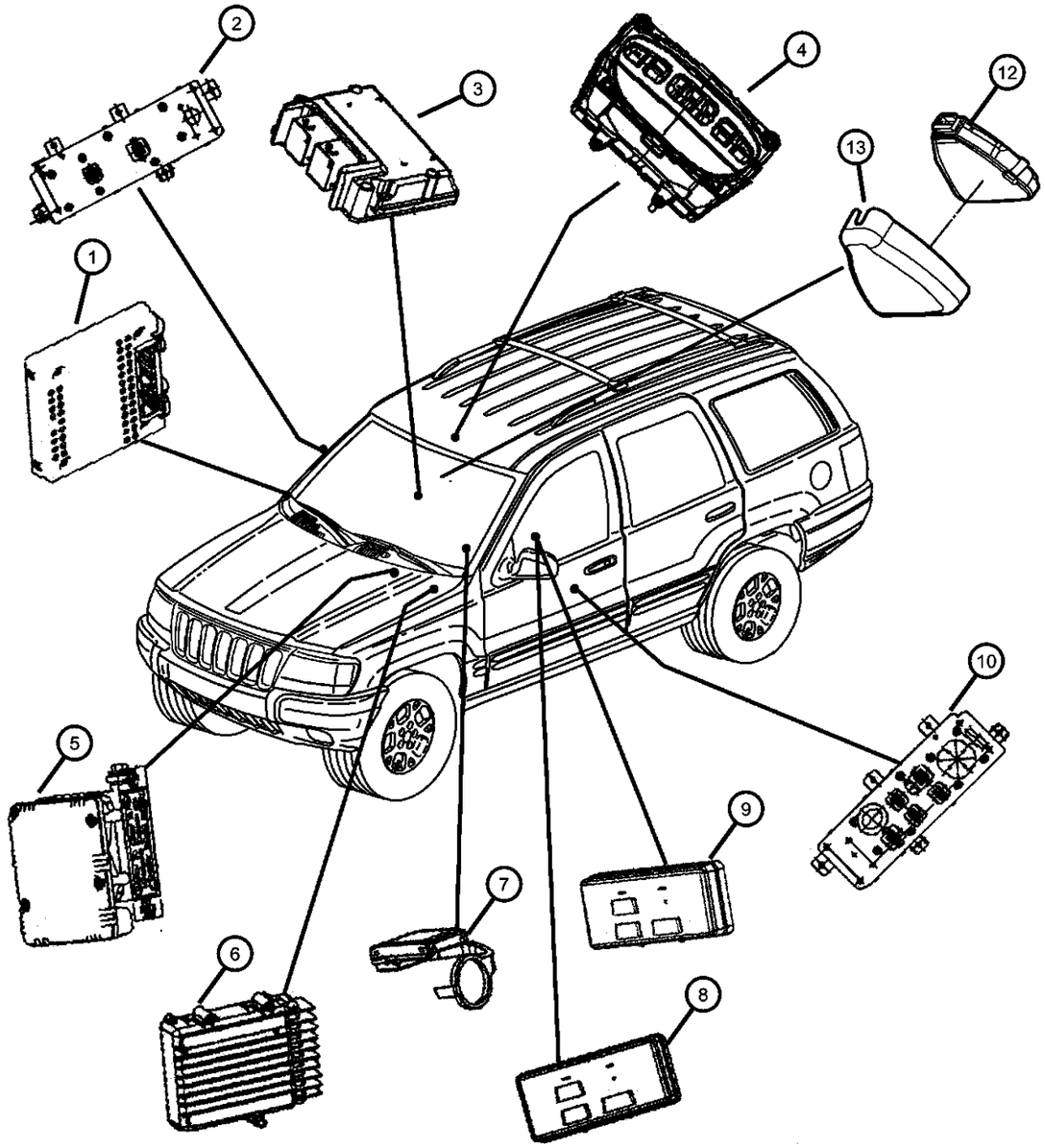

ITEM	PART NUMBER	QTY	LINE	SERIES	BODY	ENGINE	TRANS	TRIM	DESCRIPTION
13	5HJ50DX9AB	1							COVER, Sensor
-14	05072251AA	1							MODULE, Brake Pedal, Adjustable Brake Pedal
-15	05012771AA	1							CONTROL UNIT, Sunroof

GRAND CHEROKEE (WJ)

SERIES	LINE	BODY	ENGINE	TRANSMISSION
H = Laredo	T = JEEP - 2WD	74 = SPORT UTILITY 4-DR	ERH = Engine - 4.0L Power Tech I-6	DGK = 4 Speed Auto, 42RE
M = Sport	J = JEEP - 4WD		EVA = Engine- 4.7L V8 MPI	DGQ = 5 Speed Auto, 45RFE
P = Limited	U = JEEP - 4WD (RHD)		EVC = Engine - 4.7L HO V8 MPI	DG0 = All Automatic Transmissions
S = Overland			ER0 = All 4.0L 6 Cyl. Gas	
			EV0 = All 4.7L Gas	

Power Distribution Center, Fuses and Relays
Figure 8-505

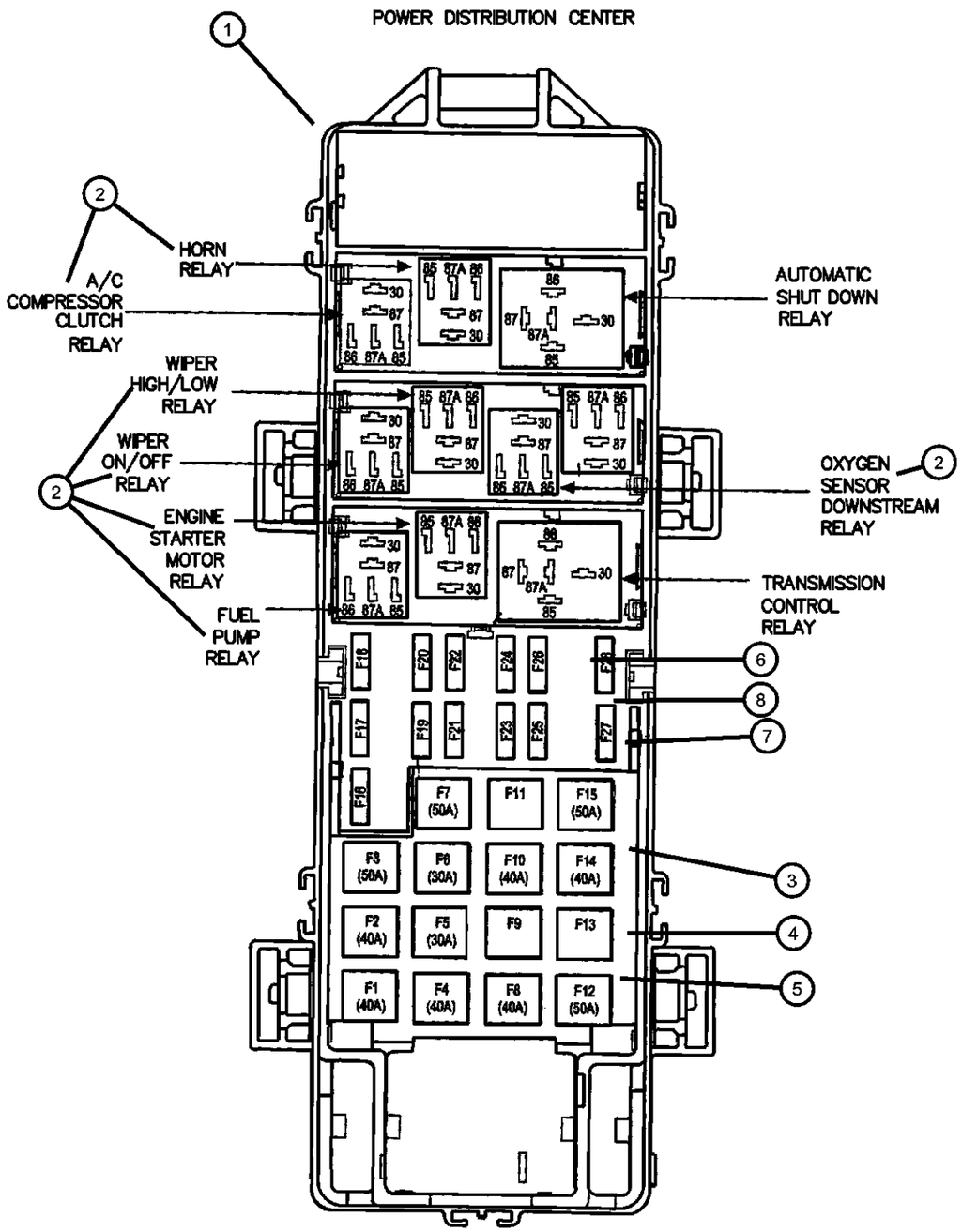

ITEM	PART NUMBER	QTY	LINE	SERIES	BODY	ENGINE	TRANS	TRIM	DESCRIPTION
1	05012771AA	1							POWER DISTRIBUTION CENTER, See Headlamp to Dash Wiring, (NOT SERVICED)
2	04671168	AR							RELAY, Mini
3	06102076AA	AR							FUSE CARTRIDGE, 30 Amp
4	06102077AA	AR							FUSE CARTRIDGE, 40 Amp
5	06102078AA	AR							FUSE CARTRIDGE, 50 Amp
6	000ATM10	1							FUSE, Mini, 10 AMP, Red
7	000ATM15	1							FUSE, Mini, 15 AMP, Light Blue
8	000ATM20	1							FUSE, Mini, 20 AMP, Yellow

GRAND CHEROKEE (WJ)

SERIES	LINE	BODY	ENGINE	TRANSMISSION
H = Laredo M = Sport P = Limited S = Overland	T = JEEP - 2WD J = JEEP - 4WD U = JEEP - 4WD (RHD)	74 = SPORT UTILITY 4-DR	ERH = Engine - 4.0L Power Tech I-6 EVA = Engine- 4.7L V8 MPI EVC = Engine - 4.7L HO V8 MPI ER0 = All 4.0L 6 Cyl. Gas EV0 = All 4.7L Gas	DGK = 4 Speed Auto, 42RE DGQ = 5 Speed Auto, 45RFE DG0 = All Automatic Transmissions

AR = use ase required - = Non illustrrated part

Junction Block, Relays, Circuit Breaker
Figure 8-510

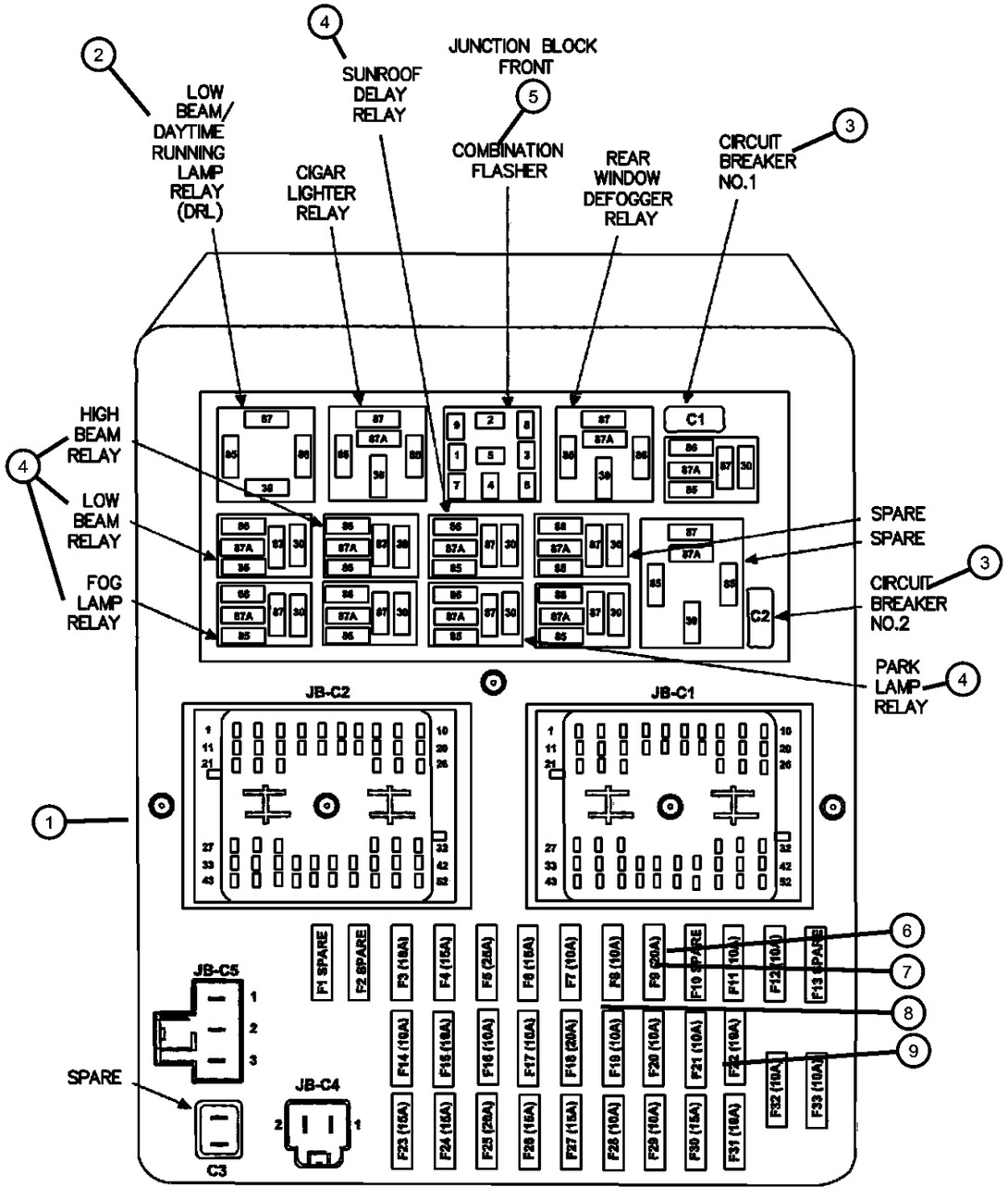

ITEM	PART NUMBER	QTY	LINE	SERIES	BODY	ENGINE	TRANS	TRIM	DESCRIPTION
1	05019816AA	1							JUNCTION BLOCK, Relay
2	56042216AB	1							RELAY, Daytime Running Lamp
3	04604235	1							BREAKER, Circuit
4	56042677AA	1							RELAY, Mini, Foglamp, Headlamp High and Low Beam, Park Lamp, Sunroof
5	04686094	1							FLASHER
6	000ATM10	1							FUSE, Mini, 10 AMP, Red
7	000ATM15	1							FUSE, Mini, 15 AMP, Light Blue
8	000ATM20	1							FUSE, Mini, 20 AMP, Yellow
9	04687835	1							FUSE, Mini, 25 Amp, Natural
-10	04707286AF	1							RELAY, Radiator Fan
-11	56007290	1							BREAKER, Circuit

GRAND CHEROKEE (WJ)

SERIES	LINE	BODY	ENGINE	TRANSMISSION
H = Laredo M = Sport P = Limited S = Overland	T = JEEP - 2WD J = JEEP - 4WD U = JEEP - 4WD (RHD)	74 = SPORT UTILITY 4-DR	ERH = Engine - 4.0L Power Tech I-6 EVA = Engine- 4.7L V8 MPI EVC = Engine - 4.7L HO V8 MPI ER0 = All 4.0L 6 Cyl. Gas EV0 = All 4.7L Gas	DGK = 4 Speed Auto, 42RE DGQ = 5 Speed Auto, 45RFE DG0 = All Automatic Transmissions

Sensors, Engine (4.0L) [ER0]
Figure 8-605

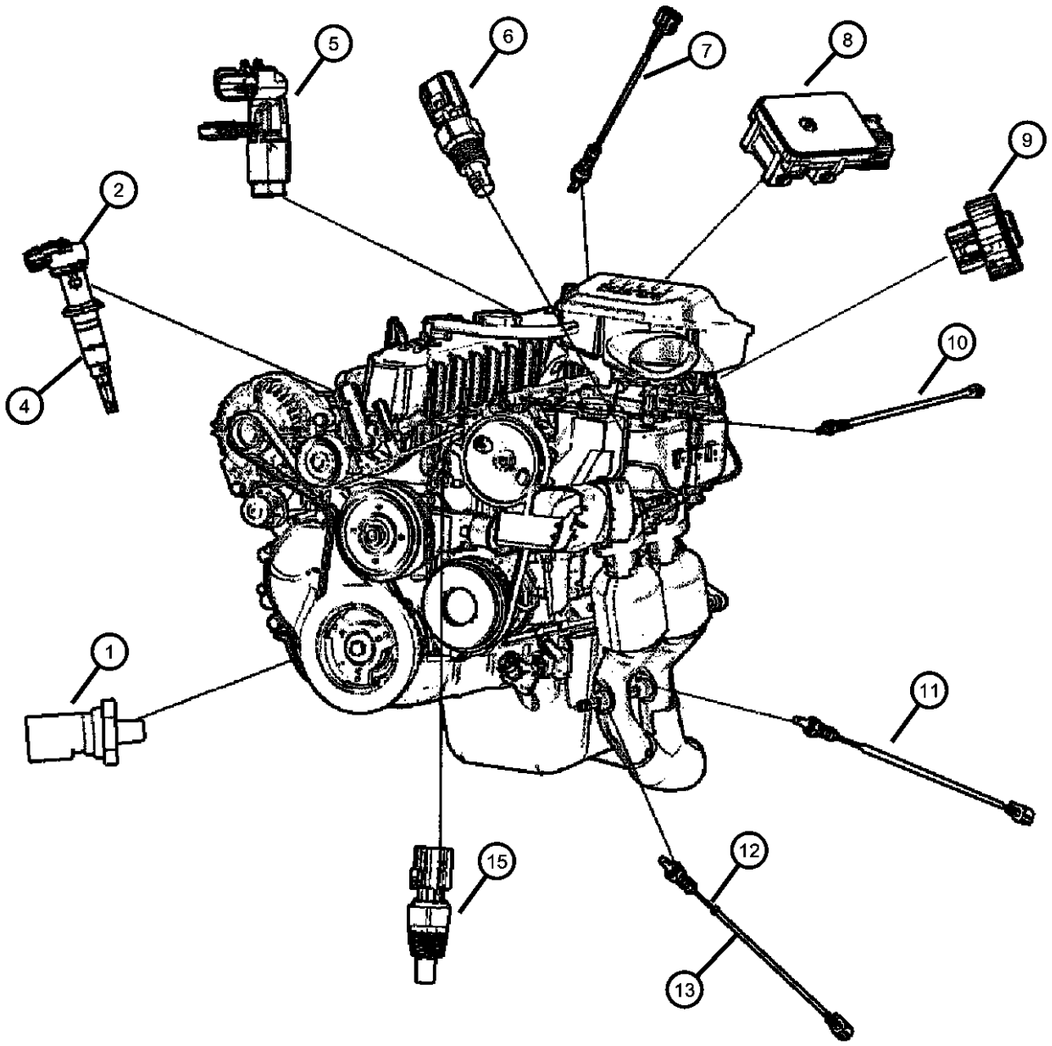

ITEM	PART NUMBER	QTY	LINE	SERIES	BODY	ENGINE	TRANS	TRIM	DESCRIPTION
Notes: [ER0]=All 4.0L Engine [DG0]=All Automaic Transmissions									
1	56028807AB	1				ER0			SENDING UNIT, Oil Pressure
2	04897023AA	1				ER0			SENSOR, Camshaft, Sensor Only
-3	J3181288	1				ER0			GASKET, Distributor
4	53010615AA	1				ER0			DRIVE, OIL PUMP, Oil Pump Drive Only
5	04897321AA	1				ER0	DG0		SENSOR PACKAGE, Crankshaft Position
6	56027872	1				ER0			SENSOR, Air Temperature
7	56031110AA	1				ER0			SENSOR, Oxygen, Upstream Rear of Exhaust Manifold
8	56029405	1				ER0			SENSOR, MAP
9	05086203AA	1				ER0			SENSOR PACKAGE, Throttle Position
10	56030100AA	1				ER0			SENSOR, Oxygen, Upstream Front of Exhaust Manifold
11	56041944AA	1	J, T		74	ER0			SENSOR, Oxygen, Down Stream Rear
12	56041845AA	1				ER0			SENSOR, Oxygen, Down Stream Front
13	05139020AA	1				ER0			SENSOR PACKAGE, Oxygen, [NAS], After Catalyst, Rear
-14	56041675AA	1				ER0			SHIELD, Heat, Oxygen Sensor
15	56027873	1				ER0			SENSOR, Coolant Temperature

GRAND CHEROKEE (WJ)

SERIES	LINE	BODY	ENGINE	TRANSMISSION
H = Laredo M = Sport P = Limited S = Overland	T = JEEP - 2WD J = JEEP - 4WD U = JEEP - 4WD (RHD)	74 = SPORT UTILITY 4-DR	ERH = Engine - 4.0L Power Tech I-6 EVA = Engine- 4.7L V8 MPI EVC = Engine - 4.7L HO V8 MPI ER0 = All 4.0L 6 Cyl. Gas EV0 = All 4.7L Gas	DGK = 4 Speed Auto, 42RE DGQ = 5 Speed Auto, 45RFE DG0 = All Automatic Transmissions

Sensors, Engine (4.7L) [EV0]
Figure 8-610

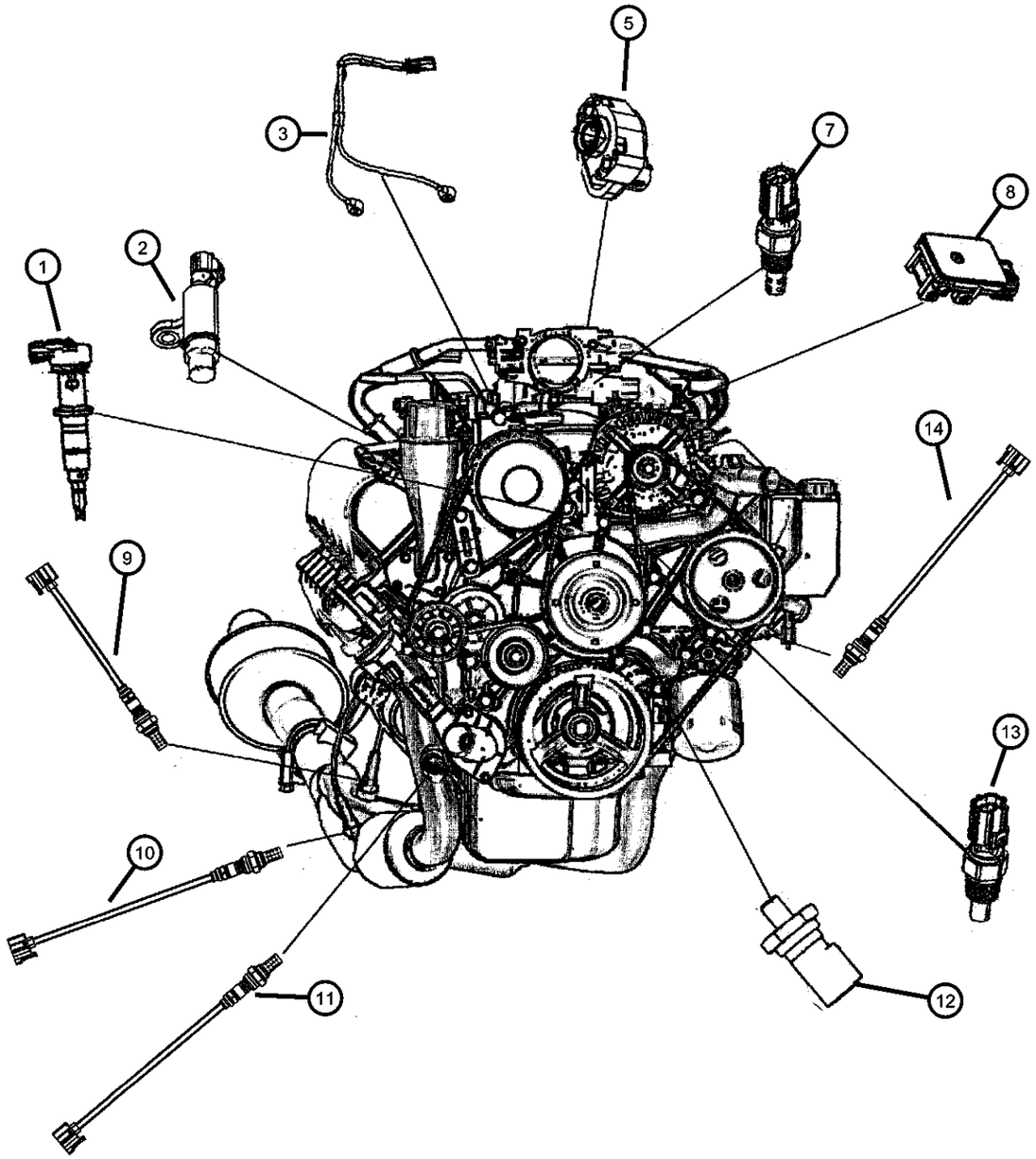

ITEM	PART NUMBER	QTY	LINE	SERIES	BODY	ENGINE	TRANS	TRIM	DESCRIPTION
Notes:									
[EV0]=4.7L Engine									
[EVC]=4.7L Power Tech H V8 Engine									
1	56028133AE	1				EV0			SENSOR, Camshaft
2	56028666AA	1				EV0			SENSOR, Crankshaft Position
3	56041677AB	1				EVC			SENSOR, Knock
-4	56041849AA	1				EVC			BRACKET, Knock Sensor
5	05017479AA	1				EV0			SENSOR KIT, Throttle Position
-6	04778462	2				EV0			SCREW, Throttle Position Sensor
7	56028364AA	1				EV0			SENSOR, Air Temperature
8	56041018AB	1				EV0			SENSOR, MAP
9	56041731AA	1				EV0			SENSOR, Oxygen, After Catalytic right side
10	56029333AA	1				EV0			SENSOR, Oxygen, Before catalytic left side
11	56041345AE	1				EV0			SENSOR, Oxygen, After Catalytic left side
12	56028807AB	1				EV0			SENDING UNIT, Oil Pressure
13	56027873	1				EV0			SENSOR, Coolant Temperature
14	56041941AA	1				EV0			SENSOR, Oxygen, Before catalytic right side
-15									BRACKET, Oxygen Sensor
	56041434AA	1				EV0			Front
	56041478AB	1				EV0			

GRAND CHEROKEE (WJ)

SERIES	LINE	BODY	ENGINE	TRANSMISSION
H = Laredo	T = JEEP - 2WD	74 = SPORT UTILITY 4-DR	ERH = Engine - 4.0L Power Tech I-6	DGK = 4 Speed Auto, 42RE
M = Sport	J = JEEP - 4WD		EVA = Engine- 4.7L V8 MPI	DGQ = 5 Speed Auto, 45RFE
P = Limited	U = JEEP - 4WD (RHD)		EVC = Engine - 4.7L HO V8 MPI	DG0 = All Automatic Transmissions
S = Overland			ER0 = All 4.0L 6 Cyl. Gas	
			EV0 = All 4.7L Gas	

Sensors Drivetrain
Figure 8-615

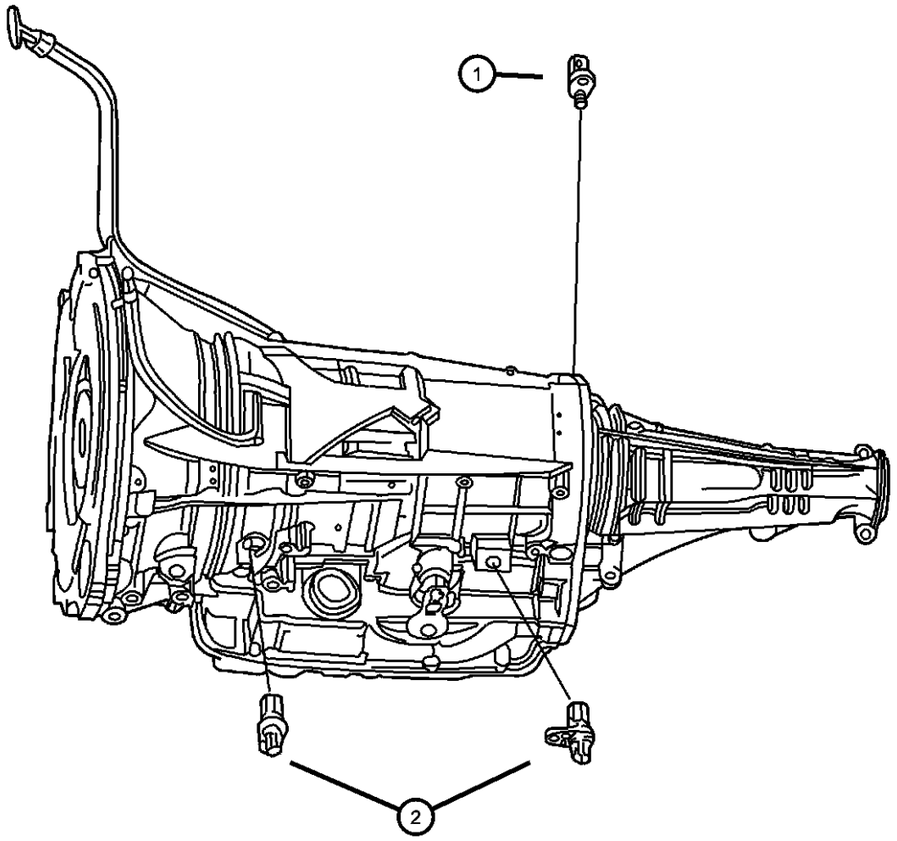

ITEM	PART NUMBER	QTY	LINE	SERIES	BODY	ENGINE	TRANS	TRIM	DESCRIPTION
Notes:									
[DGK]=4 Speed Automatic Transmission									
[DGQ]=5 Speed Automatic Transmission									
1									TRANSDUCER, Pressure Sensor, Transmission Temperature Thermister
	04799758	1	T				DGQ		
		1	J				DGQ		
	56028196AB	1	T				DGK		
		1	J				DGK		
2									SENSOR, Transmission Output Speed
	04412879	1	T				DGK		
		1	J				DGK		
	04799061	2	T				DGQ		
		2	J				DGQ		
-3									SWITCH, Transfer Case, 5 Position
	05083138AA	1	J			EV0			
		1	J			ER0			

GRAND CHEROKEE (WJ)

SERIES	LINE	BODY	ENGINE	TRANSMISSION
H = Laredo M = Sport P = Limited S = Overland	T = JEEP - 2WD J = JEEP - 4WD U = JEEP - 4WD (RHD)	74 = SPORT UTILITY 4-DR	ERH = Engine - 4.0L Power Tech I-6 EVA = Engine- 4.7L V8 MPI EVC = Engine - 4.7L HO V8 MPI ER0 = All 4.0L 6 Cyl. Gas EV0 = All 4.7L Gas	DGK = 4 Speed Auto, 42RE DGQ = 5 Speed Auto, 45RFE DG0 = All Automatic Transmissions

Sensors Body
Figure 8-620

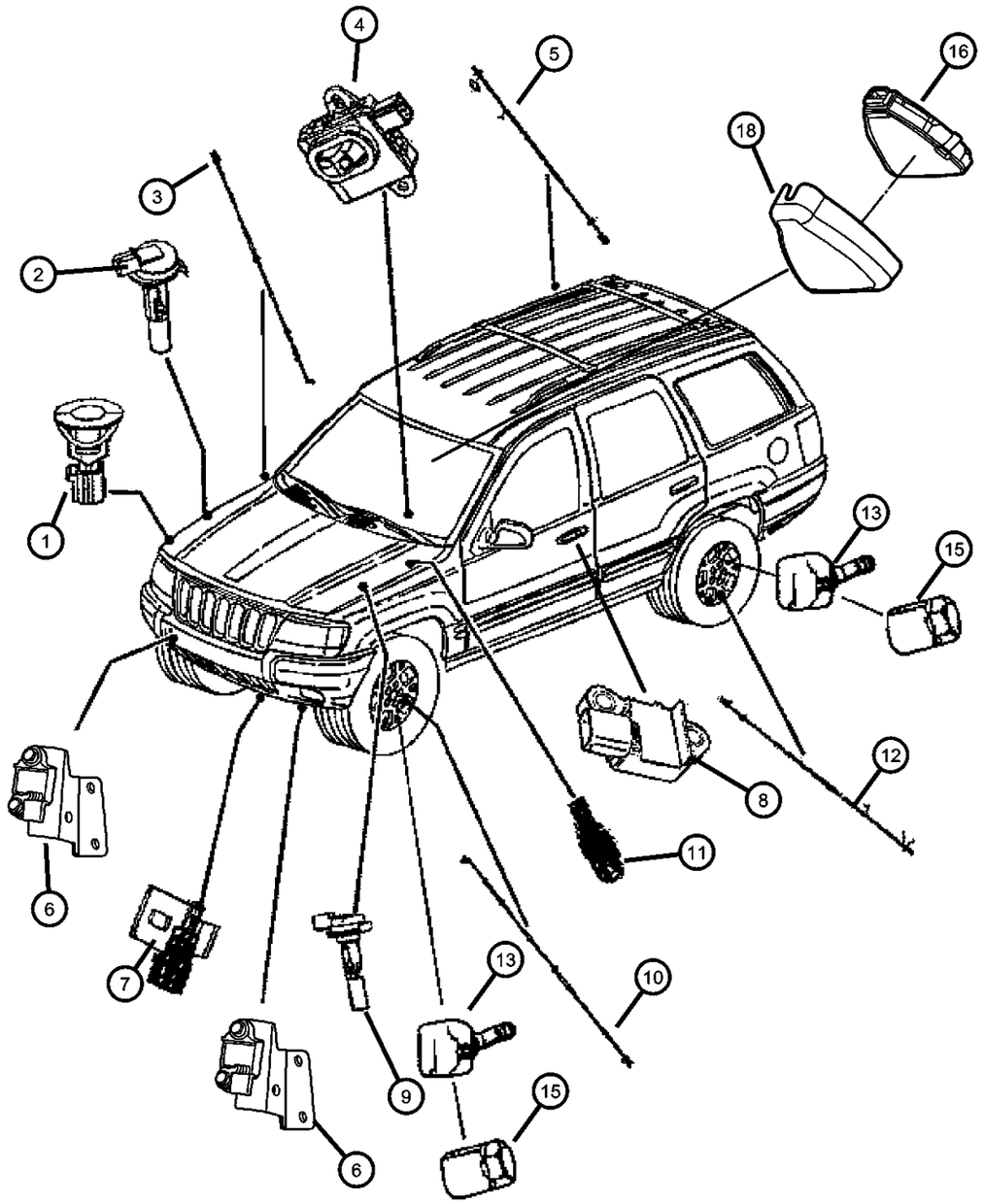

ITEM	PART NUMBER	QTY	LINE	SERIES	BODY	ENGINE	TRANS	TRIM	DESCRIPTION
Notes:									
[ER0] = 4.0L Engine									
[EV0] =4.7L Engine									
1	56041053	1							SENSOR, Battery Temperature
2									SENSOR, Coolant Level
	52079468	1				EV0			
		1				ER0			
3									SENSOR, Wheel Speed
	56041316AB	1	T						Front Right
		1	J						Front Right
4	56042584AA	1							SENSOR, Headlamp
5	56041308AA	1							SENSOR, Wheel SpeedRear
6									SENSOR, Air Bag
	56010410AC	1							Bracket Serviced with Sensor Only, Right
	56010411AC	1							Bracket Serviced with Sensor Only, Left
7									SENSOR, Ambient Temperature
	56042395	1		P					
		1		H					
		1		S					
8	56010319AA	1							SENSOR, Air Bag
9	04882797	1							SENSOR, Washer Fluid Level
10	56041317AB	1	J						SENSOR, Wheel SpeedFront Left
11	05013903AA	1							SENSOR, Brake Fluid Level
12	56041509AA	1							SENSOR, Wheel SpeedRear
13	52088990AC	5							SENSOR, Tire Pressure, Valve stem
-14	52109664AA	1							MAGNET, Tire Pressure Sensor Locator
15	52088961AA	5							NUT
16	56042759AF	1							SENSOR, Rain
-17	05083124AA	4							CAP, Valve stem
18	5HJ50DX9AB	1							COVER, Sensor
-19	56042761AA	1							BRACKET, Windshield, Rain Sensor Mounting

GRAND CHEROKEE (WJ)

SERIES	LINE	BODY	ENGINE	TRANSMISSION
H = Laredo M = Sport P = Limited S = Overland	T = JEEP - 2WD J = JEEP - 4WD U = JEEP - 4WD (RHD)	74 = SPORT UTILITY 4-DR	ERH = Engine - 4.0L Power Tech I-6 EVA = Engine- 4.7L V8 MPI EVC = Engine - 4.7L HO V8 MPI ER0 = All 4.0L 6 Cyl. Gas EV0 = All 4.7L Gas	DGK = 4 Speed Auto, 42RE DGQ = 5 Speed Auto, 45RFE DG0 = All Automatic Transmissions

JTEC Modules and Solenoids
Figure 8-710

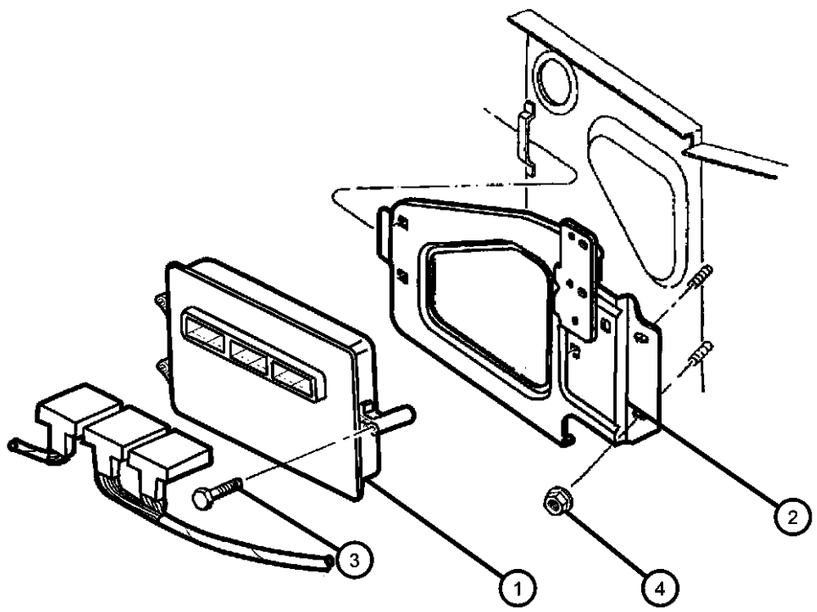

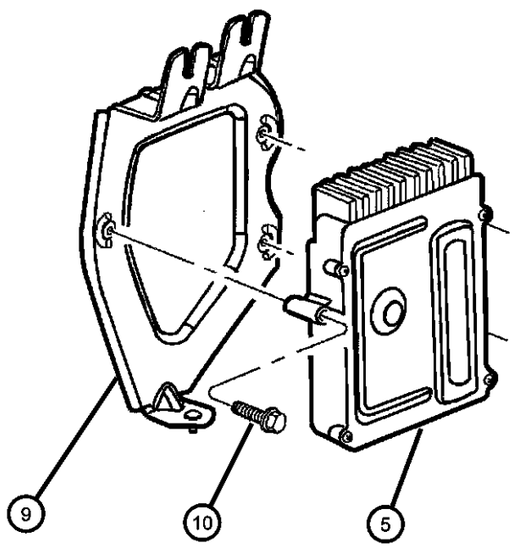

ITEM	PART NUMBER	QTY	LINE	SERIES	BODY	ENGINE	TRANS	TRIM	DESCRIPTION
Notes:									
[ER0]=4.0L Engine									
[EVA]=4.7L Power Tech Engine									
[EVC]=4.7L Power Tech HO V-8									
[EV0]=4.7L Engine									
[DG0]=Automatic Transmission									
[DGQ]= Automatic Transmission 5 Speed Automatic									
[DGK]=Automatic Transmission 4 Speed									
1									MODULE, Powertrain Control
	56041833AE	1				ER0	DG0		Federal Emission (Low Emission Vehicle) Up to 10/23/01
	56041835AE	1				ER0	DG0		California Emissions (Ultra Low Emission Vehicle)
	56044357AA	1				ER0	DG0		U.S. 50 State Emissions (Low Emission Vehicle) After 10/23/01
	56044810AB	1				EVA	DG0		U.S. 50 State Emissions (Low Emission Vehicle)
	56044811AB	1				EVC	DG0		U.S. 50 State Emissions (Low Emission Vehicle)
2	56028139AB	1				ER0, EV0	DG0		BRACKET, Control Unit
3									SCREW
	06035884	3				ER0, EV0	DG0		
		3					DGQ		
4	06503102	2							NUT AND WASHER, Hex Nut-Coned Washer, M6 x 1.00
5	56041905AC	1				EV0	DGQ		MODULE, Transmission Control
-6									SOLENOID, Transmission
	04799934AD	1	T				DGQ		
		1	J				DGQ		
-7	04617210	1	T				DGK		SOLENOID, Transmission Governor
-8	52118500AB	1	T				DGK		SOLENOID, Transmission Overdrive
9	56041045	1					DGQ		BRACKET, Control Unit
10									SCREW
	06035884	3				ER0, EV0	DG0		
		3					DGQ		
-11	06503825	3							NUT AND WASHER, Hex Nut-Coned Washer, M6 x 1.00

GRAND CHEROKEE (WJ)

SERIES	LINE	BODY	ENGINE	TRANSMISSION
H = Laredo M = Sport P = Limited S = Overland	T = JEEP - 2WD J = JEEP - 4WD U = JEEP - 4WD (RHD)	74 = SPORT UTILITY 4-DR	ERH = Engine - 4.0L Power Tech I-6 EVA = Engine- 4.7L V8 MPI EVC = Engine - 4.7L HO V8 MPI ER0 = All 4.0L 6 Cyl. Gas EV0 = All 4.7L Gas	DGK = 4 Speed Auto, 42RE DGQ = 5 Speed Auto, 45RFE DG0 = All Automatic Transmissions

AR = use ase required - = Non illustrrated part

Switches (Instrument Panel and Console)
Figure 8-810

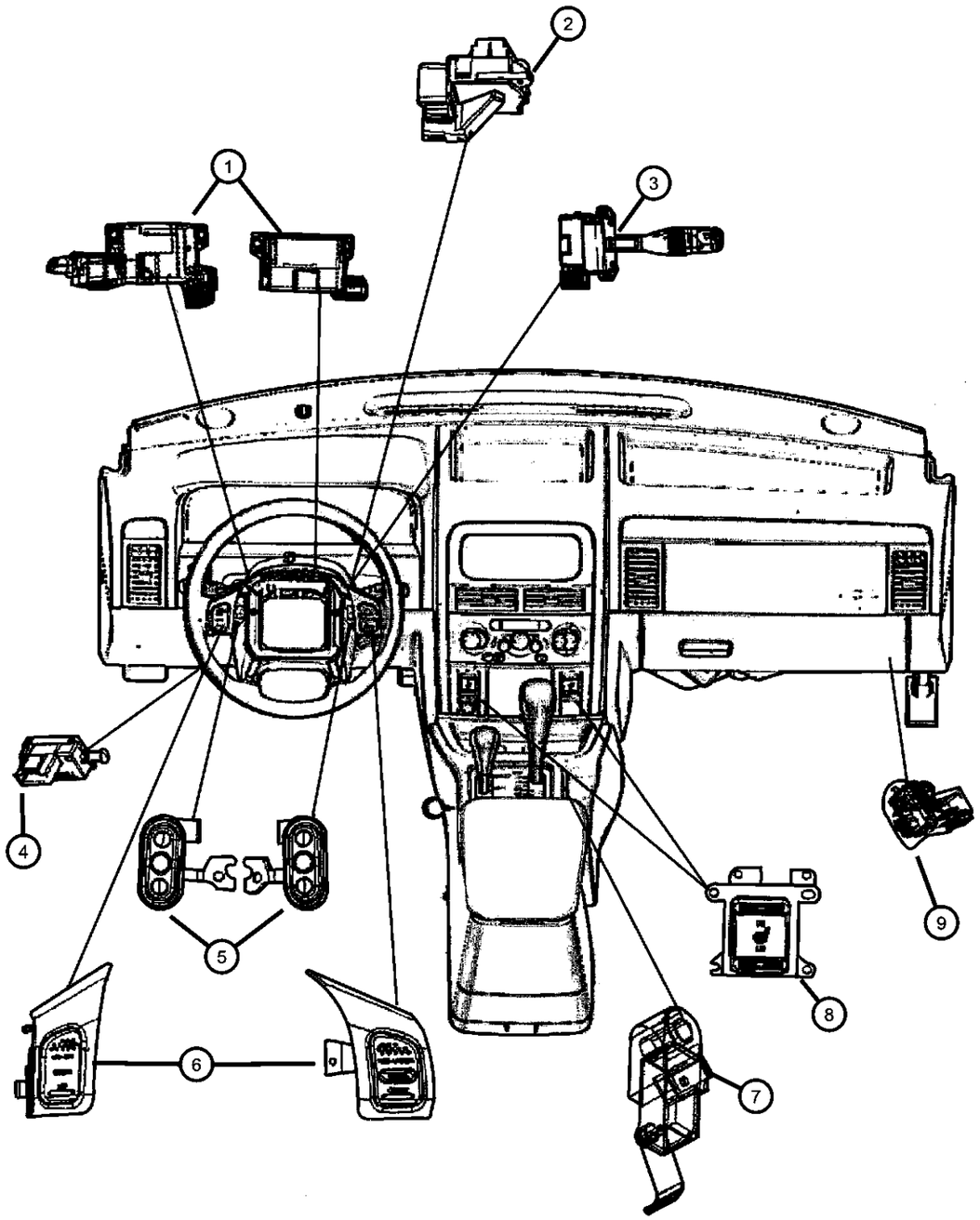

ITEM	PART NUMBER	QTY	LINE	SERIES	BODY	ENGINE	TRANS	TRIM	DESCRIPTION
1									SWITCH, Multifunction, Left Side
	56042299AG	1							Without Fog Lamps, Rain Sensitive Windshield Wipers & without Automatic Headlamps
		1							Without Fog Lamps & without Automatic Headlamps
	56042300AG	1							With Fog Lamps & without Automatic Headlamps
	56042301AG	1							Without Fog Lamps & with Automatic Headlamps
	56042302AG	1							With Fog Lamps & with Automatic Headlamps
		1							With Fog Lamps, Rain Sensitive Windshield Wipers & with Automatic Headlamps
2	56042476AC	1							SWITCH, Ignition
3									SWITCH, Wiper and Washer
	56042769AA	1							
	56050003AB	1							with Fog Lamps
4	04671336	1							SWITCH, Stop Lamp
5									SWITCH, Remote Radio
	56042312AB	1							Right
	56042313AB	1							Left
6									SWITCH, Speed Control
	56042310AC	1							Right
	56042311AC	1							Left
	5GY381DVAA	1							with Leather Wrapped Wheel, Right
	5GY391DVAA	1							with Leather Wrapped Wheel, Left
7	52127960	1							SWITCH, Parking Brake
8									SWITCH, Heated Seat
	56033017AB	1							Right
	56033019AB	1							Left
9	04565022	1							SWITCH AND LAMP, Glove Box
-10									SWITCH, Adjustable Pedals
	5HU331DVAB	1							[DB]
		1							[DV]
	5HU331L8AB	1							[L5]

GRAND CHEROKEE (WJ)

SERIES	LINE	BODY	ENGINE	TRANSMISSION
H = Laredo M = Sport P = Limited S = Overland	T = JEEP - 2WD J = JEEP - 4WD U = JEEP - 4WD (RHD)	74 = SPORT UTILITY 4-DR	ERH = Engine - 4.0L Power Tech I-6 EVA = Engine- 4.7L V8 MPI EVC = Engine - 4.7L HO V8 MPI ER0 = All 4.0L 6 Cyl. Gas EV0 = All 4.7L Gas	DGK = 4 Speed Auto, 42RE DGQ = 5 Speed Auto, 45RFE DG0 = All Automatic Transmissions

AR = use ase required - = Non illustrrated part

Switches (Instrument Panel and Console)
Figure 8-810

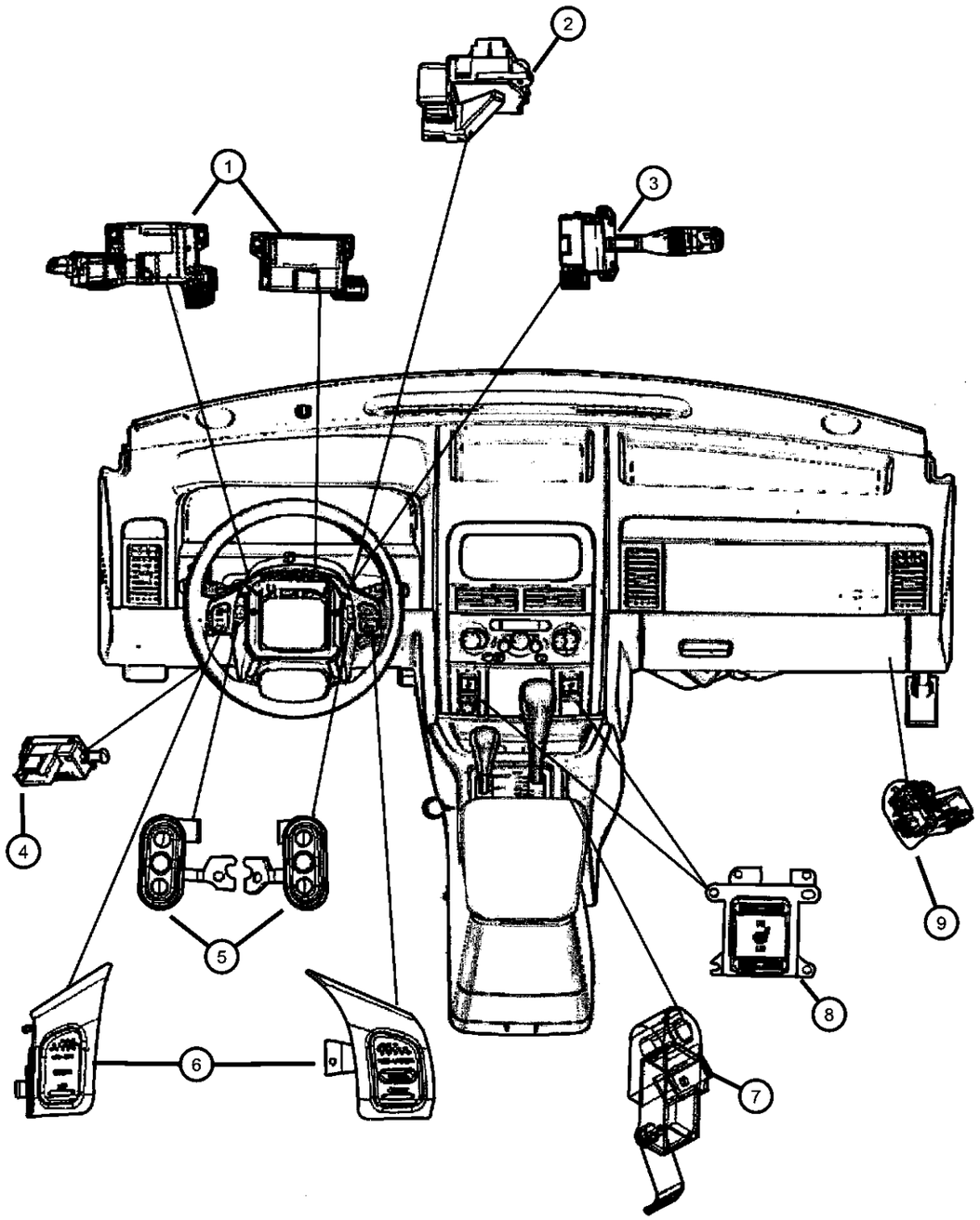

ITEM	PART NUMBER	QTY	LINE	SERIES	BODY	ENGINE	TRANS	TRIM	DESCRIPTION
	5HU331TMAB	1							[T5]
-11									SWITCH, Wiper and Washer
	56042769AA	1							Without Rain Sensitive Wiper
	56050003AB	1							With Rain Sensitive Wiper

GRAND CHEROKEE (WJ)

SERIES	LINE	BODY	ENGINE	TRANSMISSION
H = Laredo M = Sport P = Limited S = Overland	T = JEEP - 2WD J = JEEP - 4WD U = JEEP - 4WD (RHD)	74 = SPORT UTILITY 4-DR	ERH = Engine - 4.0L Power Tech I-6 EVA = Engine- 4.7L V8 MPI EVC = Engine - 4.7L HO V8 MPI ER0 = All 4.0L 6 Cyl. Gas EV0 = All 4.7L Gas	DGK = 4 Speed Auto, 42RE DGQ = 5 Speed Auto, 45RFE DG0 = All Automatic Transmissions

Switches, (Drive Train)
Figure 8-820

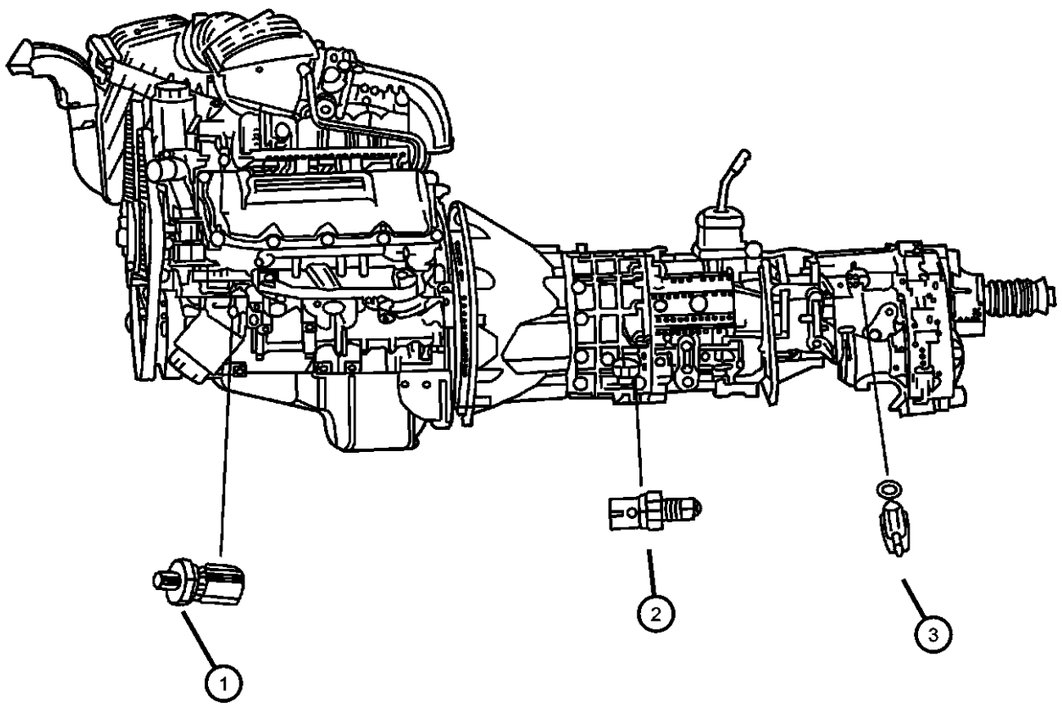

ITEM	PART NUMBER	QTY	LINE	SERIES	BODY	ENGINE	TRANS	TRIM	DESCRIPTION
Notes:									
[ER0] = 4.7L Engine									
[EV0] = 4.7L Engine									
[DGK] =4 Speed Automatic Transmission									
1									SENDING UNIT, Oil Pressure
	56028807AB	1				ER0			
		1				EV0			
2									SWITCH, Neutral, Safety, Back Up
	03747361	1	T				DGK		
		1	J				DGK		
3									SWITCH KIT, Transfer Case, 5 Position
	05072435AA	1	J			EV0			
		1	J			ER0			

GRAND CHEROKEE (WJ)

SERIES	LINE	BODY	ENGINE	TRANSMISSION
H = Laredo	T = JEEP - 2WD	74 = SPORT UTILITY 4-DR	ERH = Engine - 4.0L Power Tech I-6	DGK = 4 Speed Auto, 42RE
M = Sport	J = JEEP - 4WD		EVA = Engine- 4.7L V8 MPI	DGQ = 5 Speed Auto, 45RFE
P = Limited	U = JEEP - 4WD (RHD)		EVC = Engine - 4.7L HO V8 MPI	DG0 = All Automatic Transmissions
S = Overland			ER0 = All 4.0L 6 Cyl. Gas	
			EV0 = All 4.7L Gas	

Switches, (Body)
Figure 8-830

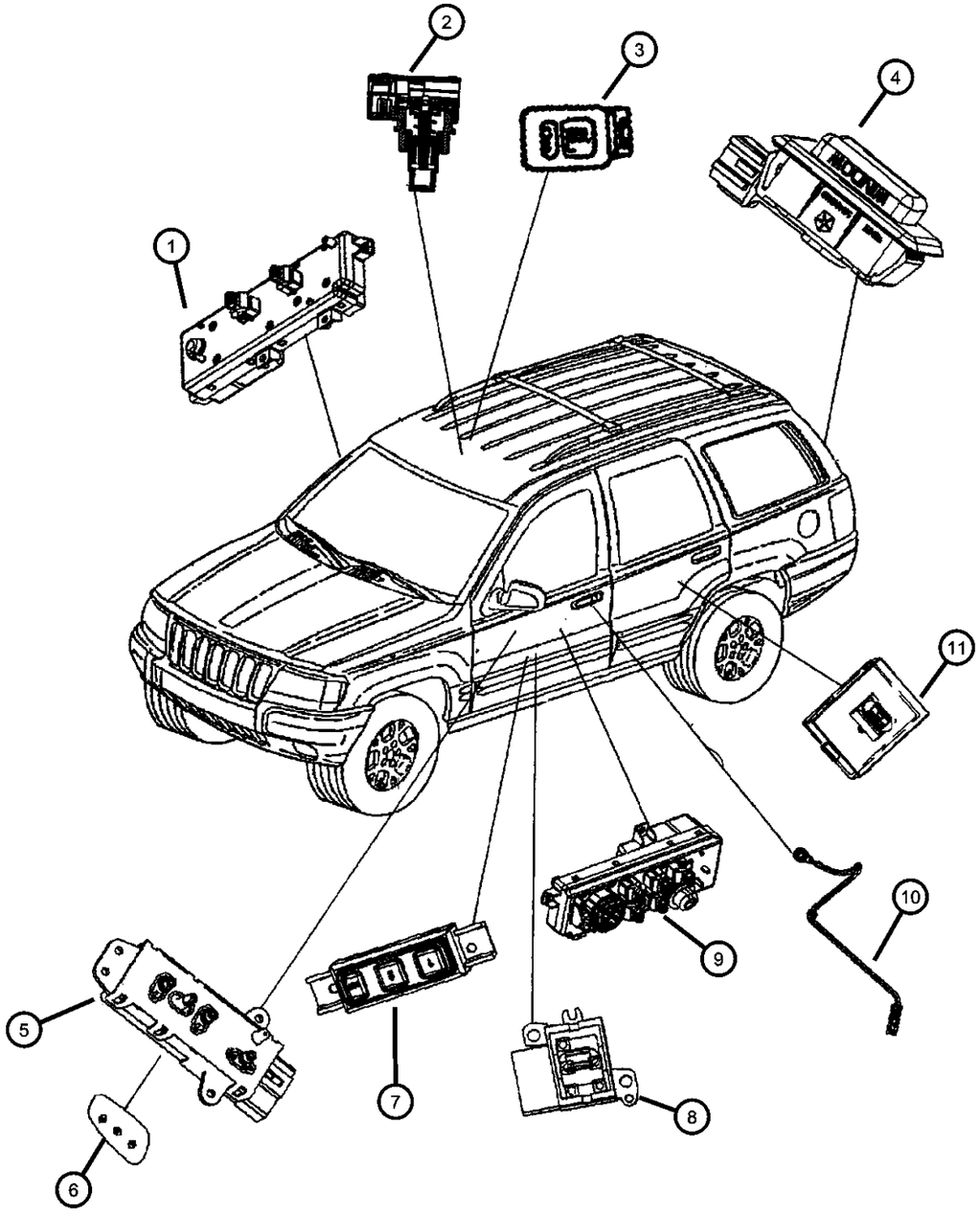

ITEM	PART NUMBER	QTY	LINE	SERIES	BODY	ENGINE	TRANS	TRIM	DESCRIPTION
1									SWITCH, Door Module, Keyless Entry Module Serviced w/Passenger Door Switch Module (Except JAPAN)
	5HB62DX9AC	1		S					
		1		P					
		1		H					
2	04685445	1							SWITCH, Reading Lamp
3	56042064	1							SWITCH, 1 Gang, Sunroof
4									SWITCH, Flipper Window
	56042450AB	1		P					
		1		H					
		1		S					
5									SWITCH, Seat
	04373666	2							6 Way
	04601756AB	1							10 Way, Right
	04601757AB	1							10 Way, Left
6									KNOB, Power Seat Switch
	04607042	1							Right
	04607042AB	1							Without graphics, Right
	04607043AB	1							Left
	04607044	1							Recliner, Right
	04607044AB	1							Recliner Without graphics, Right
	04607045AB	1							Recliner Without graphics, Left
7									SWITCH, Memory Selector
	56042291AB	1		P					
		1		S					
8	56042387	2							SWITCH, Lumbar Control
9									SWITCH, Door Module, Keyless Entry Module Serviced w/Passenger Door Switch Module (Except JAPAN)
	5HB61DX9AC	1		S					
		1		P					
		1		H					
10	55136557AA	1							SWITCH, Security Alarm

GRAND CHEROKEE (WJ)

SERIES	LINE	BODY	ENGINE	TRANSMISSION
H = Laredo M = Sport P = Limited S = Overland	T = JEEP - 2WD J = JEEP - 4WD U = JEEP - 4WD (RHD)	74 = SPORT UTILITY 4-DR	ERH = Engine - 4.0L Power Tech I-6 EVA = Engine- 4.7L V8 MPI EVC = Engine - 4.7L HO V8 MPI ER0 = All 4.0L 6 Cyl. Gas EV0 = All 4.7L Gas	DGK = 4 Speed Auto, 42RE DGQ = 5 Speed Auto, 45RFE DG0 = All Automatic Transmissions

Switches, (Body)
Figure 8-830

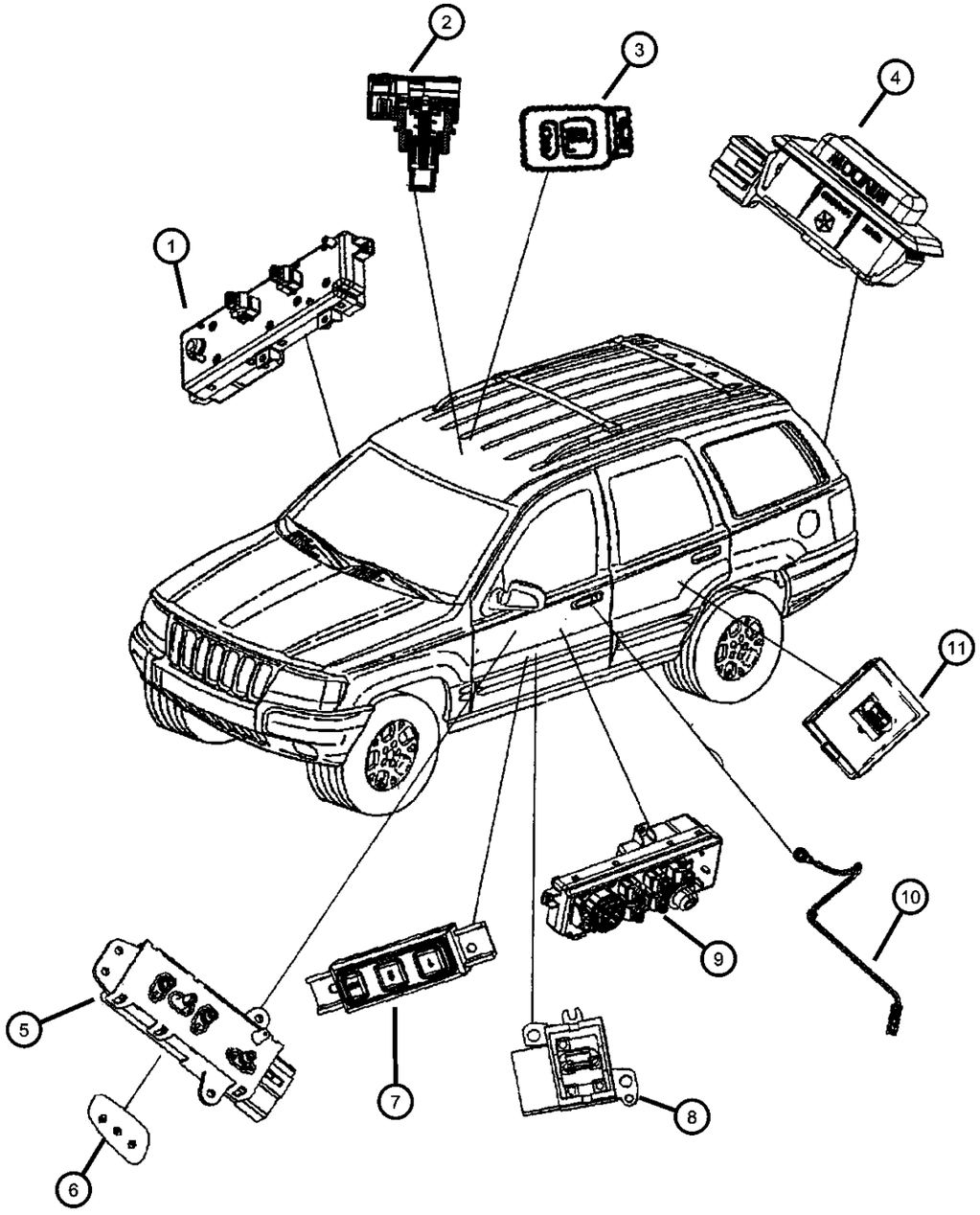

ITEM	PART NUMBER	QTY	LINE	SERIES	BODY	ENGINE	TRANS	TRIM	DESCRIPTION
11									SWITCH, Power Window
	5HB57DX9AA	1		P					Rear Door
		1		H					Rear Door
		1		S					Rear Door
-12									SWITCH, Adjustable Pedals
	5HU331DVAB	1							[DB]
		1							[DV]
	5HU331L8AB	1							[L5]
	5HU331TMAB	1							[T5]

GRAND CHEROKEE (WJ)

SERIES	LINE	BODY	ENGINE	TRANSMISSION
H = Laredo M = Sport P = Limited S = Overland	T = JEEP - 2WD J = JEEP - 4WD U = JEEP - 4WD (RHD)	74 = SPORT UTILITY 4-DR	ERH = Engine - 4.0L Power Tech I-6 EVA = Engine- 4.7L V8 MPI EVC = Engine - 4.7L HO V8 MPI ER0 = All 4.0L 6 Cyl. Gas EV0 = All 4.7L Gas	DGK = 4 Speed Auto, 42RE DGQ = 5 Speed Auto, 45RFE DG0 = All Automatic Transmissions

Horns
Figure 8-910

ITEM	PART NUMBER	QTY	LINE	SERIES	BODY	ENGINE	TRANS	TRIM	DESCRIPTION
1	56042315AD	1							HORN, Duel

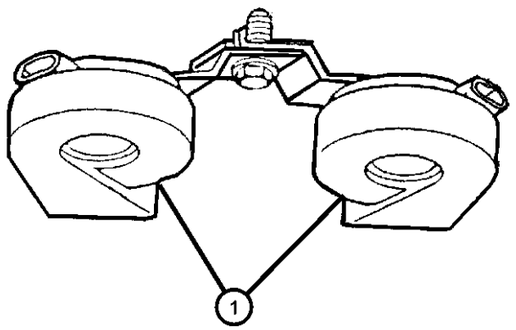

GRAND CHEROKEE (WJ)

SERIES	LINE	BODY	ENGINE	TRANSMISSION
H = Laredo M = Sport P = Limited S = Overland	T = JEEP - 2WD J = JEEP - 4WD U = JEEP - 4WD (RHD)	74 = SPORT UTILITY 4-DR	ERH = Engine - 4.0L Power Tech I-6 EVA = Engine- 4.7L V8 MPI EVC = Engine - 4.7L HO V8 MPI ER0 = All 4.0L 6 Cyl. Gas EV0 = All 4.7L Gas	DGK = 4 Speed Auto, 42RE DGQ = 5 Speed Auto, 45RFE DG0 = All Automatic Transmissions

Battery Tray & Cables
Figure 8-1010

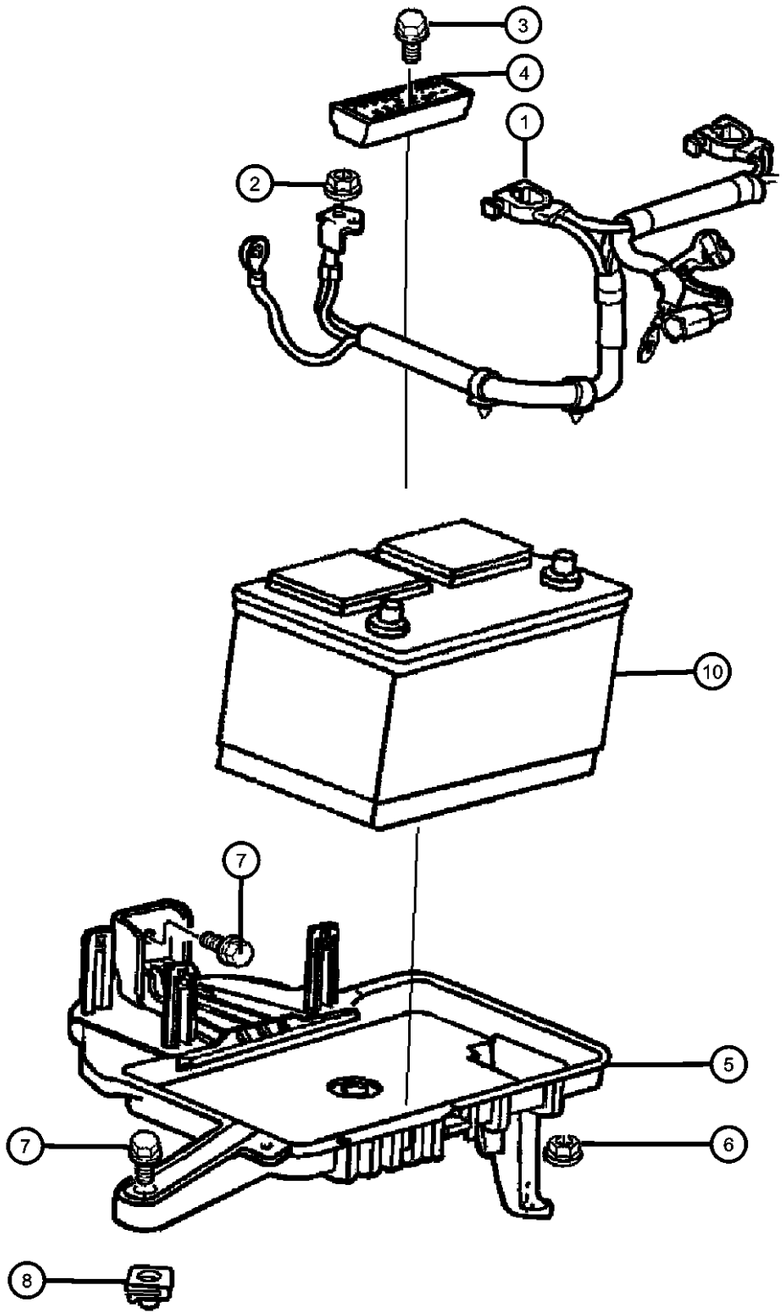

ITEM	PART NUMBER	QTY	LINE	SERIES	BODY	ENGINE	TRANS	TRIM	DESCRIPTION
Notes:									
ER0=4.0L Engine									
EV0=4.7L Engine									
1									WIRING, Alternator and Battery
	56041907AA	1				ER0			
	56041908AA	1				EV0			
2	06101808	2				ER0, EV0			NUT, Hex, M6x1
3	06101808	2							SCREW AND WASHER, (NOT SERVICED)
4	55136959AB	1				ER0, EV0			BRACKET, Battery Hold Down
5	55137183AC	1				ER0, EV0			SUPPORT, Battery
	BA065750EX								Mopar Power Pro 6
	JEEP065750								Mopar Jeep Xtreme
	BA065600EX								Mopar Power Pro 5
	56041556AB								Mopar Power Pro 7
	56041113								Mopar Power Pro 7
6	06504030	1							NUT AND WASHER, Hex, M6x1
7	06100568	4							BOLT AND WASHER, Implement Attaching
8	06101712	1				ER0, EV0			NUT, U, M6x1
-9	56045607AA	1							COVER, Insulator, Wiring Protection, Alternator connector cover
10	04741698	1							BATTERY, Storage
	NAS65750EX								Mopar NASCAR Battery
	BA065600EX								Mopar Power Pro 6
	BA065750EX								Mopar Power Pro 6

GRAND CHEROKEE (WJ)

SERIES	LINE	BODY	ENGINE	TRANSMISSION
H = Laredo	T = JEEP - 2WD	74 = SPORT UTILITY 4-DR	ERH = Engine - 4.0L Power Tech I-6	DGK = 4 Speed Auto, 42RE
M = Sport	J = JEEP - 4WD		EVA = Engine- 4.7L V8 MPI	DGQ = 5 Speed Auto, 45RFE
P = Limited	U = JEEP - 4WD (RHD)		EVC = Engine - 4.7L HO V8 MPI	DG0 = All Automatic Transmissions
S = Overland			ER0 = All 4.0L 6 Cyl. Gas	
			EV0 = All 4.7L Gas	

Lamp - Front End
Figure 8-1110

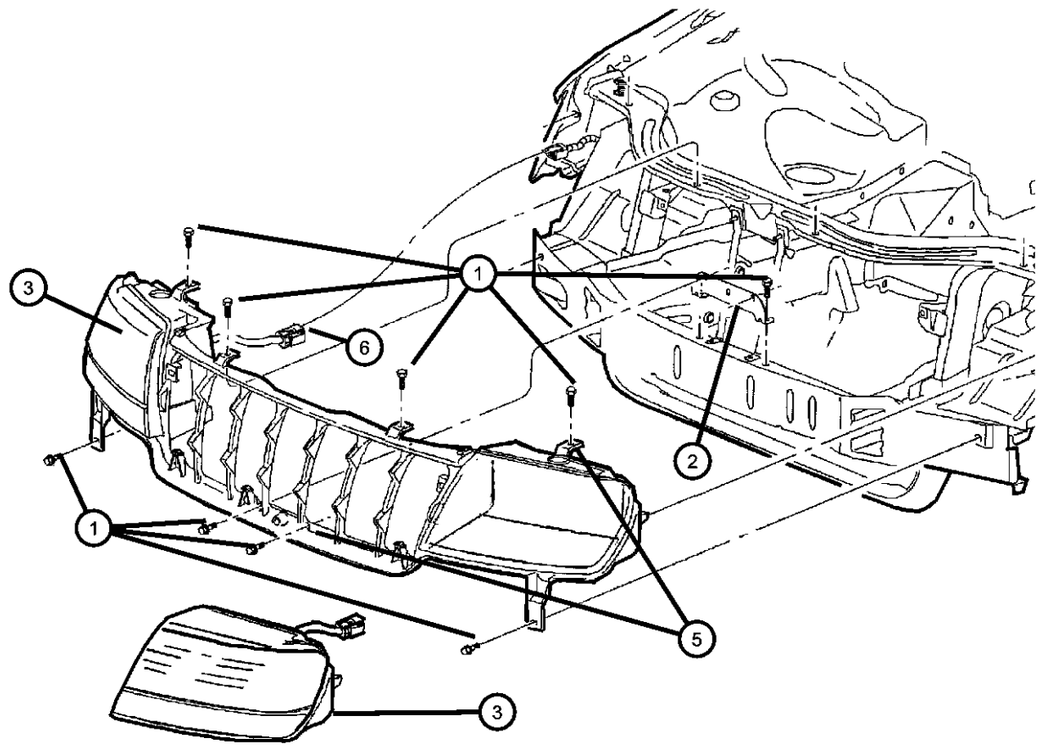

ITEM	PART NUMBER	QTY	LINE	SERIES	BODY	ENGINE	TRANS	TRIM	DESCRIPTION
1	06503259	2							SCREW, Tapping, M6x1x20
2	55155706AC	1							BRACKET, Headlamp Panel
3									LAMP, Headlamp Park And Turn
	55155128AB	1		H					Laredo w/o Headlamp Leveling up to 1/14/02, Right
	55155128AC	1		H, M					Laredo w/o Headlamp Leveling up after 1/14/02, Right
	55155129AB	1		H					Laredo w/o Headlamp Leveling up to 1/14/02, Left
	55155129AC	1		H, M					Laredo w/o Headlamp Leveling up after 1/14/02, Left
	55155552AE	1		P, S					Limited / Overland w/o Headlamp Leveling, Right
	55155553AE	1		P, S					Limited / Overland w/o Headlamp Leveling, Left
-4									SCREW, Large Round Washer Head, Jack Screw
	06504483	2		H, M					
		2		P, S					
5	55155498	1		P					SUPPORT, Headlamp Panel
6									WIRING, Headlamp
	05012604AA	1		P, S					
		1		H, M					
-7	56042395	1		P					SENSOR, Ambient Temperature
-8	05012685AA	1		H					RETAINER, Headlamp Receptical
-9	06033014	1		P					NUT
-10	L0009006XS	1		H					BULB, Headlamp, 9006XS
-11	L09005XSLL	1		H					BULB, Headlamp
-12	L0003157	1							BULB, 3157
-13	L00194NA	2		P, S					BULB, 194NA
-14	L0003157NA	4		P					BULB, 3157 NAK
	L0003157ST								SilverStar
-15									LAMP, Fog
	55155136	AR							Right
	55155137	1		P					Left
-16	L0009055	AR							BULB, 9055

GRAND CHEROKEE (WJ)

SERIES	LINE	BODY	ENGINE	TRANSMISSION
H = Laredo M = Sport P = Limited S = Overland	T = JEEP - 2WD J = JEEP - 4WD U = JEEP - 4WD (RHD)	74 = SPORT UTILITY 4-DR	ERH = Engine - 4.0L Power Tech I-6 EVA = Engine- 4.7L V8 MPI EVC = Engine - 4.7L HO V8 MPI ER0 = All 4.0L 6 Cyl. Gas EV0 = All 4.7L Gas	DGK = 4 Speed Auto, 42RE DGQ = 5 Speed Auto, 45RFE DG0 = All Automatic Transmissions

Lamp - Rear End
Figure 8-1120

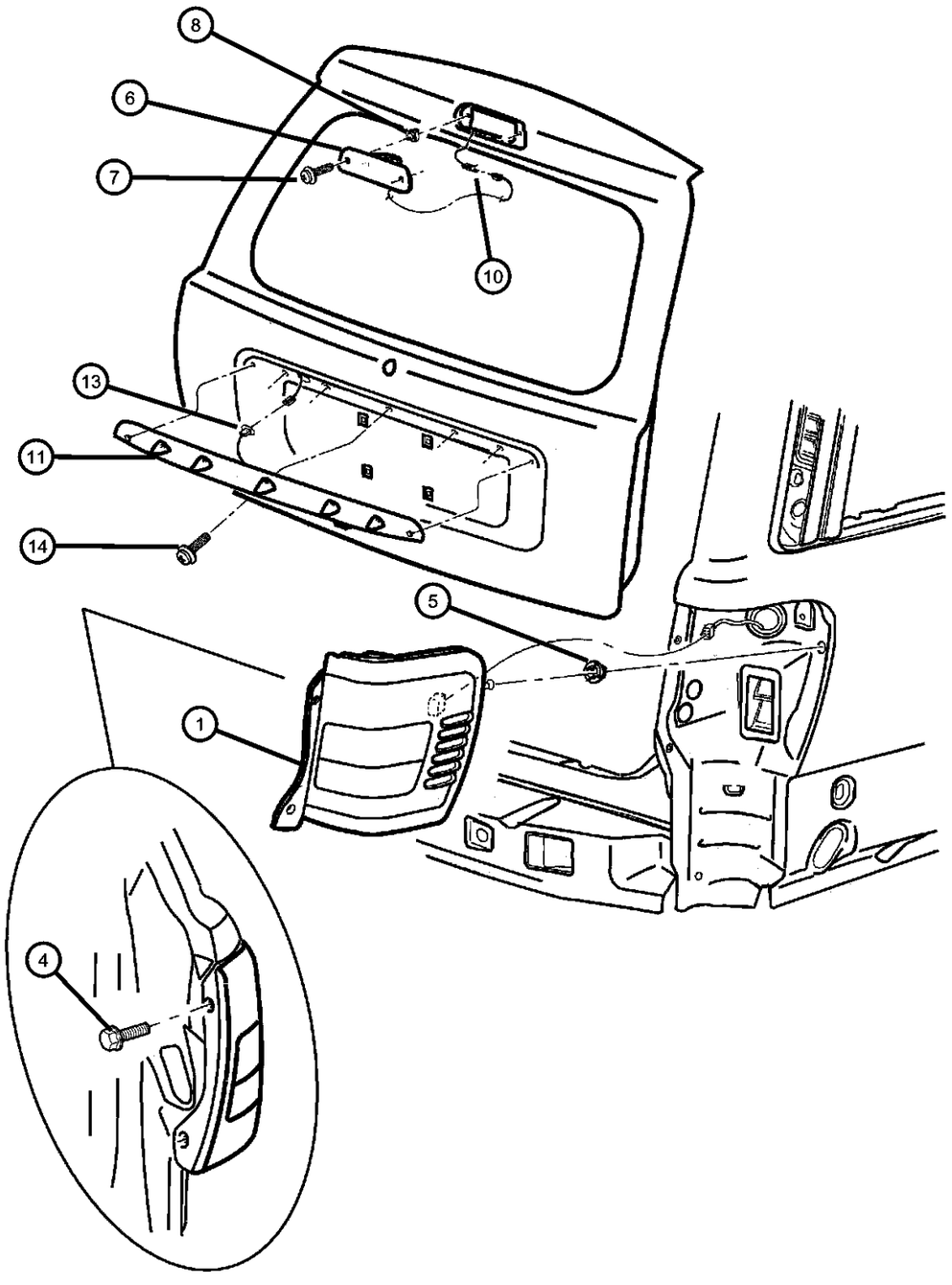

ITEM	PART NUMBER	QTY	LINE	SERIES	BODY	ENGINE	TRANS	TRIM	DESCRIPTION
1									LAMP, Tail Stop Turn
	55155138AC	1							Up to 11/12/01, Right
	55155138AG	1							11/12/01 & After (Clear with Black Border), Right
	55155139AC	1							Up to 11/12/01, Left
	55155139AF	1							11/12/01 & After (Clear with Black Border), Left
-2	L0003157	1							BULB, 3157
-3	04676589	3							SOCKET, Board
4	04676589	3							SCREW, .190-16 X .750, (NOT SERVICED)
5	06505386AA	2							NUT, Plastic
6	55155140	1							LAMP, High Mounted Stop
7	06036163AA	2							SCREW, .19-16x1.00
8	06505703AA	2							NUT, Plastic Snap-in
-9	00154883AA	1							BULB, 921
10	56042544	1							WIRING, High Mounted Stop Lamp
11									HOUSING, Lamp
	05012553AB	1		H, M					Laredo
	05012554AA	1		P					Limited
		1		S					Limited
-12									LAMP, License
	05012548AA	1		P					
		2		S					
		1		H, M					
13									WIRING, License Lamp
	56042545AD	1		P					
		1		S					
		1		H, M					
14	06506997AA	5							SCREW, License Plate Lamp
-15									SWITCH, Flipper Window
	56042450AB	1		P					
		1		S					
		1		H, M					
-16									BULB, 168

GRAND CHEROKEE (WJ)

SERIES	LINE	BODY	ENGINE	TRANSMISSION
H = Laredo M = Sport P = Limited S = Overland	T = JEEP - 2WD J = JEEP - 4WD U = JEEP - 4WD (RHD)	74 = SPORT UTILITY 4-DR	ERH = Engine - 4.0L Power Tech I-6 EVA = Engine- 4.7L V8 MPI EVC = Engine - 4.7L HO V8 MPI ER0 = All 4.0L 6 Cyl. Gas EV0 = All 4.7L Gas	DGK = 4 Speed Auto, 42RE DGQ = 5 Speed Auto, 45RFE DG0 = All Automatic Transmissions

Lamp - Rear End
Figure 8-1120

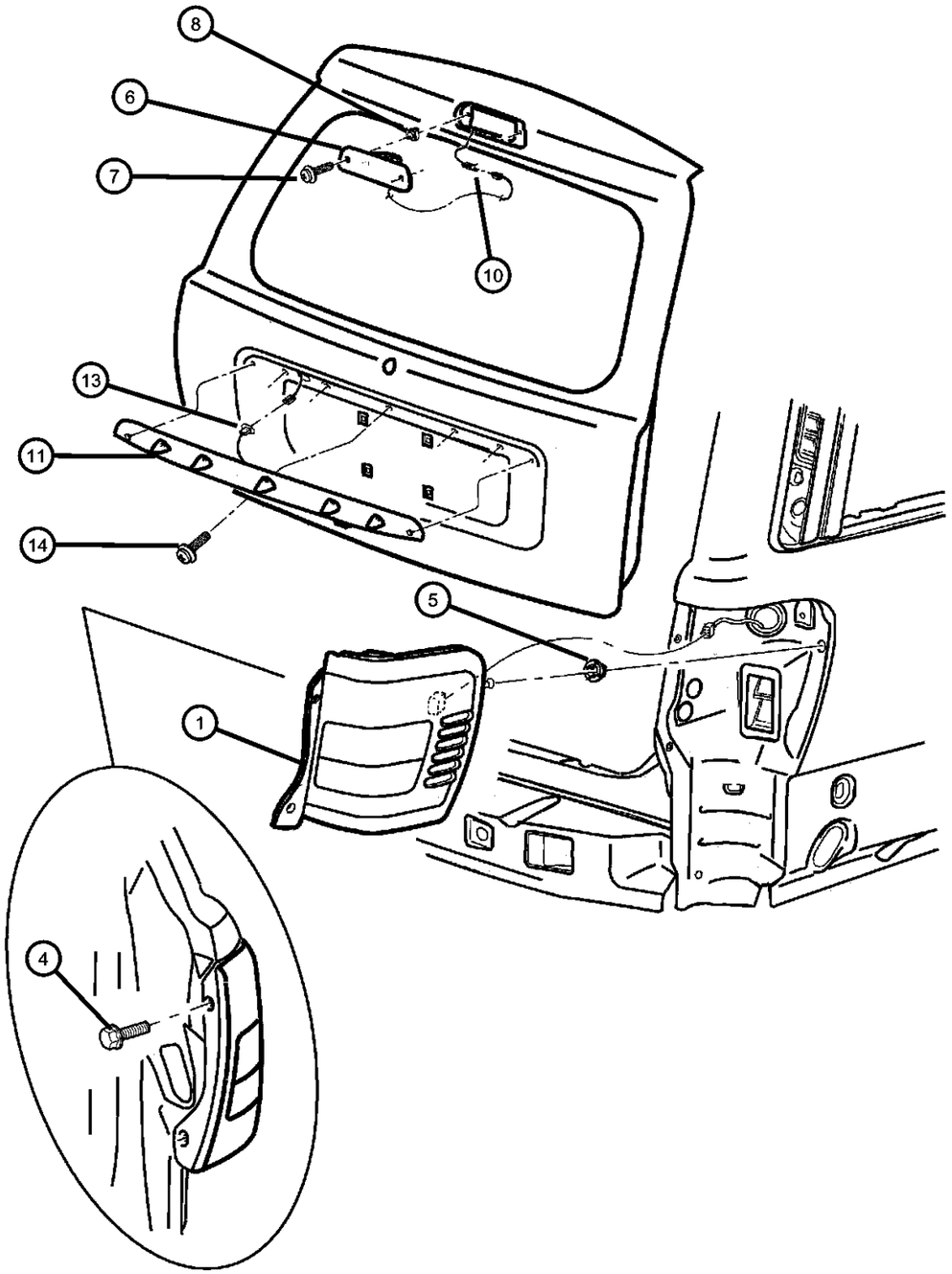

ITEM	PART NUMBER	QTY	LINE	SERIES	BODY	ENGINE	TRANS	TRIM	DESCRIPTION
	L0000168	1		P					
		2		S					
		2		H, M					

GRAND CHEROKEE (WJ)

SERIES	LINE	BODY	ENGINE	TRANSMISSION
H = Laredo M = Sport P = Limited S = Overland	T = JEEP - 2WD J = JEEP - 4WD U = JEEP - 4WD (RHD)	74 = SPORT UTILITY 4-DR	ERH = Engine - 4.0L Power Tech I-6 EVA = Engine- 4.7L V8 MPI EVC = Engine - 4.7L HO V8 MPI ER0 = All 4.0L 6 Cyl. Gas EV0 = All 4.7L Gas	DGK = 4 Speed Auto, 42RE DGQ = 5 Speed Auto, 45RFE DG0 = All Automatic Transmissions

AR = use ase required - = Non illustrrated part

Lamp - Courtesy - Dome - Reading
Figure 8-1130

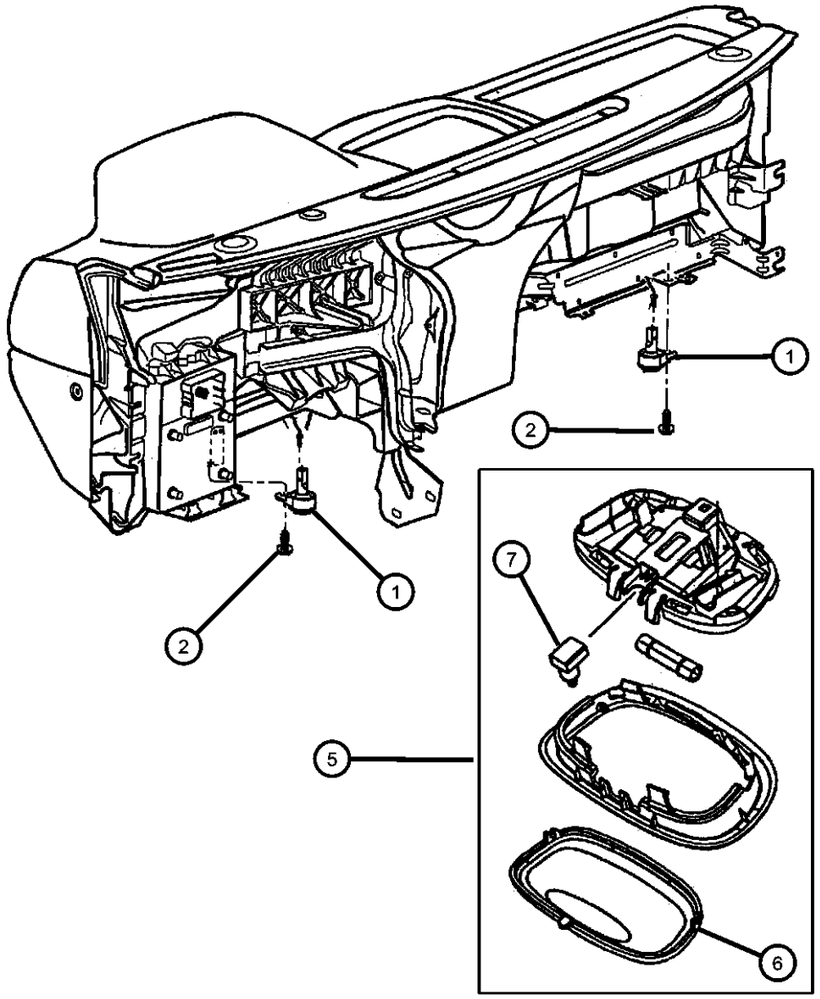

ITEM	PART NUMBER	QTY	LINE	SERIES	BODY	ENGINE	TRANS	TRIM	DESCRIPTION
1	56042559AA	2							LAMP, Courtesy, I/Panel Lower
2	06101946	3							SCREW, Tapping
-3	L0000161	1							BULB, 161, Ash Receiver
-4	04778794	1							LENS, Illuminated VisorRight & Left
5									LAMP, Cargo
	5FT10TL2	1							Beige (Rear Overhead Console) [DV]
	5FT10XDB	1							Blue/Quartz (Rear Overhead Console) [DB]
	5FT10XT5	1							Tan/Agate (Rear Overhead Console) [T5]
6	55196755AA	1							LENS, Cargo Lamp
7									LENS, Lamp Module, Grab Handle
	55196759AA	1							Left Rear
	55196760AA	1							Right Rear
-8	04685445	1							SWITCH, Reading LampRear Cargo
-9	04437661	4							LAMP, Message Center
-10									LAMP, Door
	56005076	1		P					Right
		1		S					Right
	56005077	1		P					Left
		1		S					Left
-11	04897446AA	1							LENS, Lamp Module, Underhood Lamp

GRAND CHEROKEE (WJ)

SERIES	LINE	BODY	ENGINE	TRANSMISSION
H = Laredo	T = JEEP - 2WD	74 = SPORT UTILITY 4-DR	ERH = Engine - 4.0L Power Tech I-6	DGK = 4 Speed Auto, 42RE
M = Sport	J = JEEP - 4WD		EVA = Engine- 4.7L V8 MPI	DGQ = 5 Speed Auto, 45RFE
P = Limited	U = JEEP - 4WD (RHD)		EVC = Engine - 4.7L HO V8 MPI	DG0 = All Automatic Transmissions
S = Overland			ER0 = All 4.0L 6 Cyl. Gas	
			EV0 = All 4.7L Gas	

Bulbs & Sockets
Figure 8-1140

ITEM	PART NUMBER	QTY	LINE	SERIES	BODY	ENGINE	TRANS	TRIM	DESCRIPTION
Notes:									
ER0=4.0L Engine									
EVA=4.7L Power Tech Engine V8									
1	L0003157	1							BULB, 3157, Turn signal
-2	L0000921	1							BULB, 921, CHMSL
-3	L0000561	1							BULB, 561, Underhood
-4									BULB, Headlamp, 9006XS
	L0009006XS	1		H					
		1		P					
		1		P, S					
		1		H, M					
-5	L0009005	1		P					BULB, Headlamp
-6	L0000161	1							BULB, 161, Ash Receiver
-7	L0000906	2							BULB, 906, Courtesy lamp
-8	L0000192	2							BULB, 192, Overhead console
-9									BULB, PC74
	L000PC74	12		H		ER0, EVA			Cluster
		13		P		ER0, EVA			Cluster
		13				EVC			Cluster
-10	L0000194	1							BULB, 194, Glove box lamp
-11	L0021202	1							BULB, 212-2, Dome lamp
-12	L0021402	1							BULB, 21402, Grab handle lamp
-13	05013123AA	4							BULB, Heater and A/C Control

GRAND CHEROKEE (WJ)

SERIES	LINE	BODY	ENGINE	TRANSMISSION
H = Laredo M = Sport P = Limited S = Overland	T = JEEP - 2WD J = JEEP - 4WD U = JEEP - 4WD (RHD)	74 = SPORT UTILITY 4-DR	ERH = Engine - 4.0L Power Tech I-6 EVA = Engine- 4.7L V8 MPI EVC = Engine - 4.7L HO V8 MPI ER0 = All 4.0L 6 Cyl. Gas EV0 = All 4.7L Gas	DGK = 4 Speed Auto, 42RE DGQ = 5 Speed Auto, 45RFE DG0 = All Automatic Transmissions

Wiring - Engine & Related Parts 4.0 Engine
Figure 8-1210

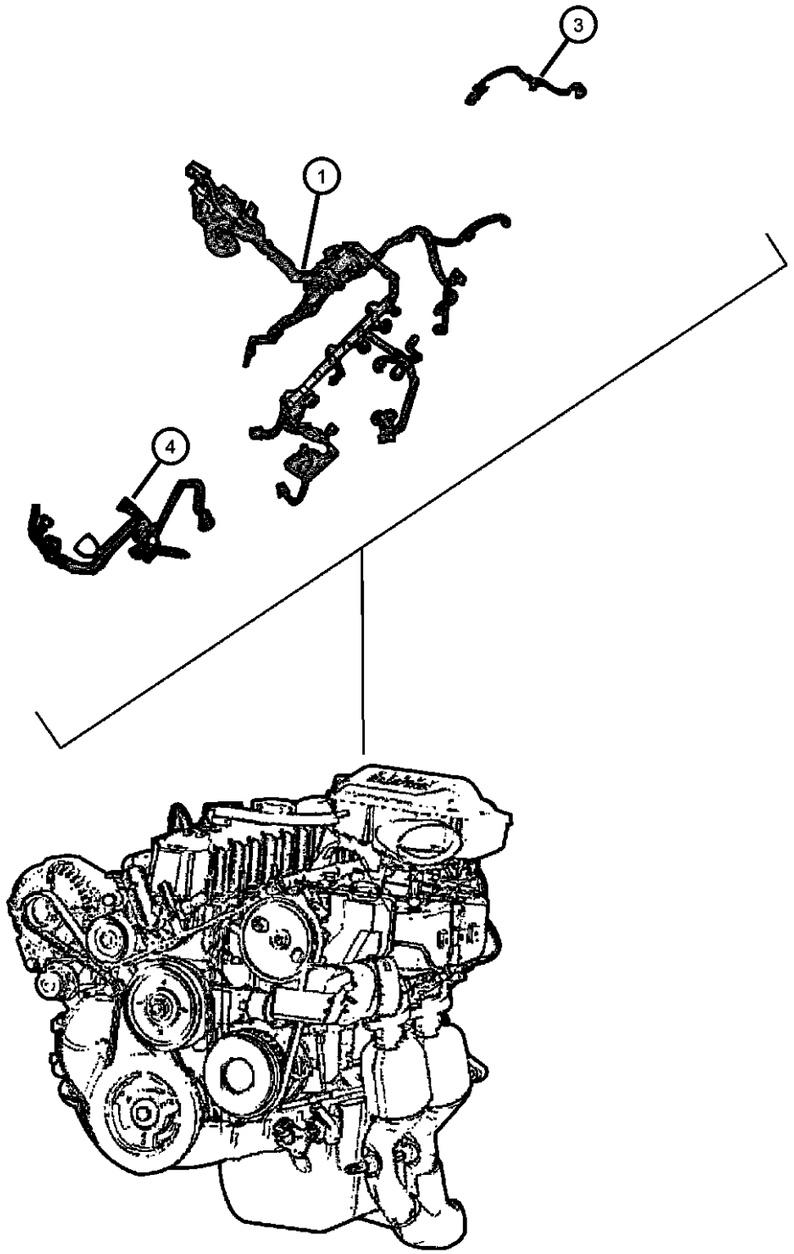

ITEM	PART NUMBER	QTY	LINE	SERIES	BODY	ENGINE	TRANS	TRIM	DESCRIPTION
Notes:									
[ER0]=4.0L Engine									
[DG0]=Automatic Transmission									
1									WIRING, Injector
	56041989AD	1				ER0	DG0		Up to 1/28/02
	56041989AF	1	J			ER0	DG0		[DHF,DHQ] After 1/28/02
	56044219AB	1	J			ER0	DG0		[DHP]
-2	56008876	1							STRAP, Tie
3	56041899AB	1	J			ER0, EV0			WIRING, Transfer Case Jumper
4	56041907AA	1				ER0			WIRING, Alternator and Battery

GRAND CHEROKEE (WJ)

SERIES	LINE	BODY	ENGINE	TRANSMISSION
H = Laredo	T = JEEP - 2WD	74 = SPORT UTILITY 4-DR	ERH = Engine - 4.0L Power Tech I-6	DGK = 4 Speed Auto, 42RE
M = Sport	J = JEEP - 4WD		EVA = Engine- 4.7L V8 MPI	DGQ = 5 Speed Auto, 45RFE
P = Limited	U = JEEP - 4WD (RHD)		EVC = Engine - 4.7L HO V8 MPI	DG0 = All Automatic Transmissions
S = Overland			ER0 = All 4.0L 6 Cyl. Gas	
			EV0 = All 4.7L Gas	

Wiring Engine and Related Parts 4.7 Engine
Figure 8-1220

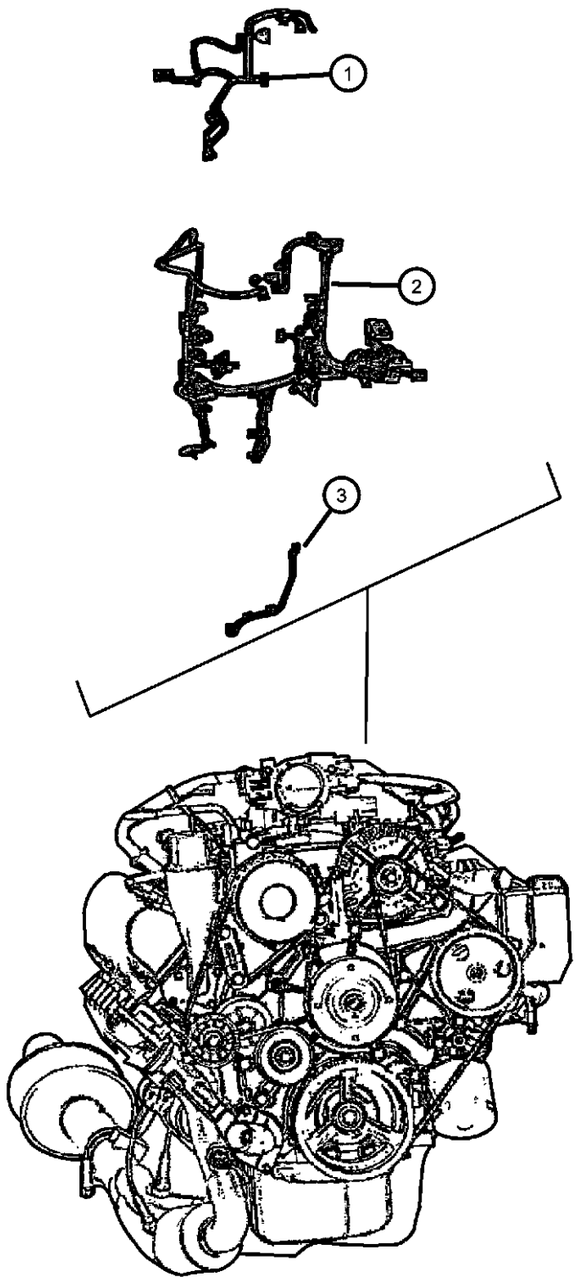

ITEM	PART NUMBER	QTY	LINE	SERIES	BODY	ENGINE	TRANS	TRIM	DESCRIPTION
Notes:									
[EVA]=4.7L Power Tech Engine									
[EVC]=4.7L Power Tech HO V-8									
[EV0]=4.7L Engine									
[DG0]=Automatic Transmission									
1	56041908AA	1				EV0			WIRING, Alternator and Battery
2									WIRING, Injector
	56041991AC	1				EVA	DG0		Up to 1/28/02
	56041991AD	1	T			EVA	DG0		After 1/28/02
	56041993AE	1				EVC	DG0		
3	56041899AB	1	J			ER0, EV0			WIRING, Transfer Case Jumper
-4	56008876	1							STRAP, Tie

GRAND CHEROKEE (WJ)

SERIES	LINE	BODY	ENGINE	TRANSMISSION
H = Laredo	T = JEEP - 2WD	74 = SPORT UTILITY 4-DR	ERH = Engine - 4.0L Power Tech I-6	DGK = 4 Speed Auto, 42RE
M = Sport	J = JEEP - 4WD		EVA = Engine- 4.7L V8 MPI	DGQ = 5 Speed Auto, 45RFE
P = Limited	U = JEEP - 4WD (RHD)		EVC = Engine - 4.7L HO V8 MPI	DG0 = All Automatic Transmissions
S = Overland			ER0 = All 4.0L 6 Cyl. Gas	
			EV0 = All 4.7L Gas	

Wiring - Headlamp / Dash
Figure 8-1310

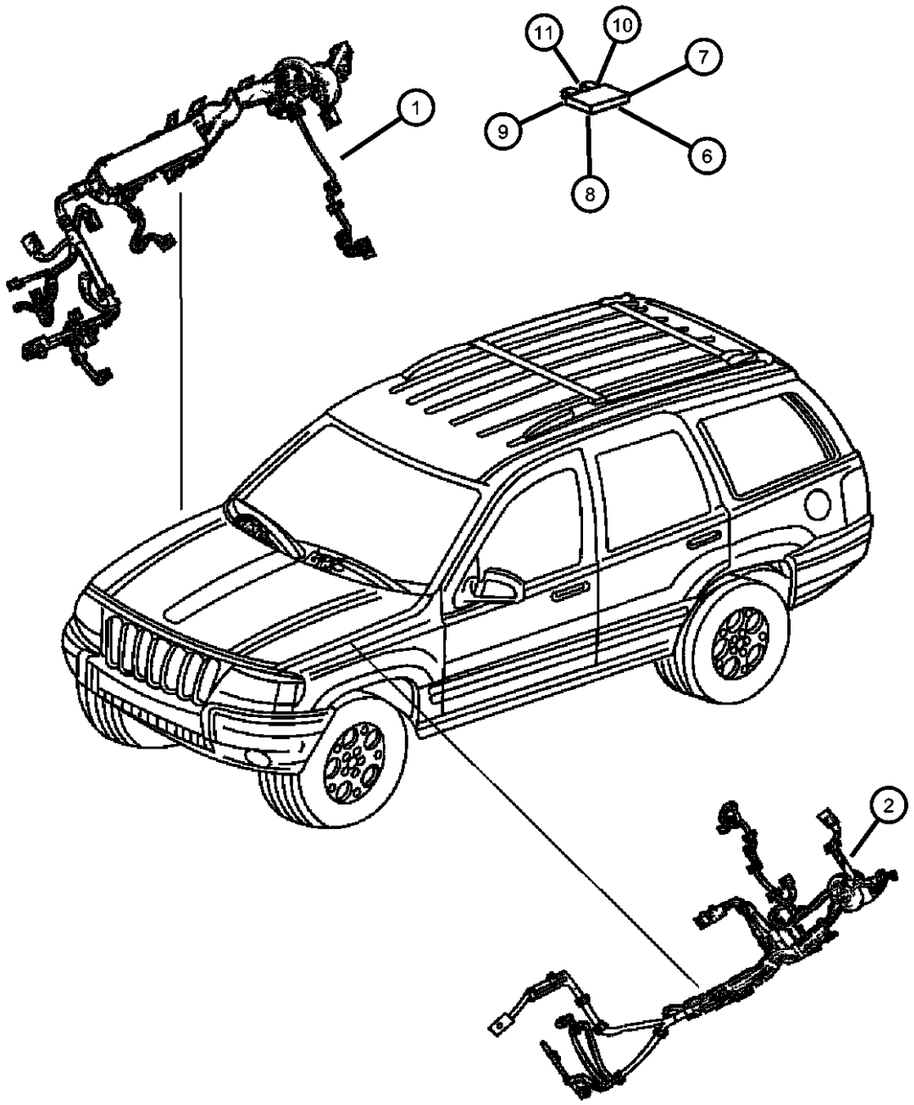

ITEM	PART NUMBER	QTY	LINE	SERIES	BODY	ENGINE	TRANS	TRIM	DESCRIPTION
Notes:									
[ER0]=4.0L Engine									
[EV0]=4.7L Engine									
[EVA]=4.7L Power Tech Engine V8									
[EVC]=4.7L Power Tech HO Engine V8									
1									WIRING, Headlamp to Dash
	56042951AF	1				ER0			With Foglamps, Right
	56042955AF	1				EVA			With Foglamps, Right
	56042956AF	1				EVC			Right
	56050238AA	1				ER0			Without Foglamps, Right
	56050239AA	1				EVA			Without Foglamps, Right
2									WIRING, Headlamp to Dash
	56042958AD	1				ER0, EV0			Left
	56050240AD	1				ER0, EV0			Without Foglamps, Left
-3	04604235	1							BREAKER, Circuit
-4	05083117AA	AR							COVER, Power Distribution Center
-5	04671168	AR							RELAY, Mini
6	000ATM10	1							FUSE, Mini, 10 AMP, Red
7	000ATM15	1							FUSE, Mini, 15 AMP, Light Blue
8	000ATM20	1							FUSE, Mini, 20 AMP, Yellow
9	06102076AA	AR							FUSE CARTRIDGE, 30 Amp
10	06102077AA	AR							FUSE CARTRIDGE, 40 Amp
11	06102078AA	AR							FUSE CARTRIDGE, 50 Amp
-12	55196762AA	1							PULLER, Fuse

GRAND CHEROKEE (WJ)

SERIES	LINE	BODY	ENGINE	TRANSMISSION
H = Laredo	T = JEEP - 2WD	74 = SPORT UTILITY 4-DR	ERH = Engine - 4.0L Power Tech I-6	DGK = 4 Speed Auto, 42RE
M = Sport	J = JEEP - 4WD		EVA = Engine- 4.7L V8 MPI	DGQ = 5 Speed Auto, 45RFE
P = Limited	U = JEEP - 4WD (RHD)		EVC = Engine - 4.7L HO V8 MPI	DG0 = All Automatic Transmissions
S = Overland			ER0 = All 4.0L 6 Cyl. Gas	
			EV0 = All 4.7L Gas	

Wiring - Instrument Panel
Figure 8-1410

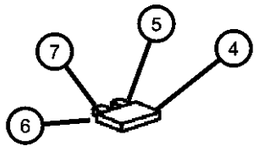

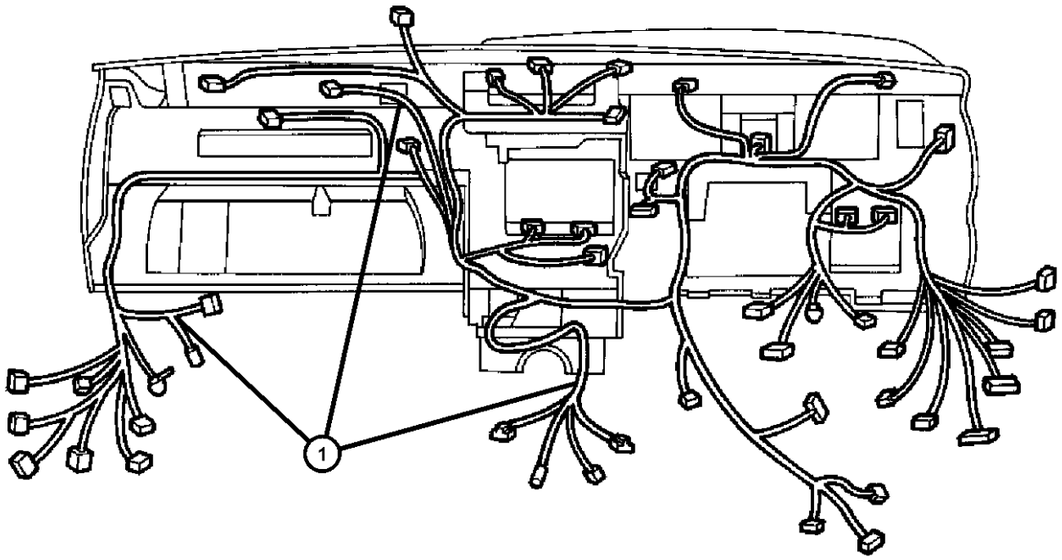

ITEM	PART NUMBER	QTY	LINE	SERIES	BODY	ENGINE	TRANS	TRIM	DESCRIPTION
1									WIRING, Instrument Panel
	56050049AD	1							with Air Condition & 10 Disc Remote CD Changer
	56050050AD	1							with Automatic Headlamp, Air Condition with Automatic Dual Temperature Control & 10 Disc Remote CD Changer
	56050187AA	1							with Air Condition & without 10 Disc Remote CD Changer
	56050188AA	1							with Automatic Headlamp, Air Condition with Automatic Dual Temperature Control & without 10 Disc Remote CD Changer
-2	04274258	1							TAPE, Radio Connector, Foam
-3	05019816AA	1							JUNCTION BLOCK, Relay
4	000ATM10	1							FUSE, Mini, 10 AMP, Red
5	000ATM15	1							FUSE, Mini, 15 AMP, Light Blue
6	000ATM20	1							FUSE, Mini, 20 AMP, Yellow
7	04687835	1							FUSE, Mini, 25 Amp, Natural
-8	55196762AA	1							PULLER, Fuse
-9	55116564AC	1							COVER, Fuse Access
-10	04604235	1							BREAKER, Circuit
-11	56042679AA	1							PLUG, Wiring, 16 Way (Plug/Cap/Shorting Bar)

GRAND CHEROKEE (WJ)

SERIES	LINE	BODY	ENGINE	TRANSMISSION
H = Laredo M = Sport P = Limited S = Overland	T = JEEP - 2WD J = JEEP - 4WD U = JEEP - 4WD (RHD)	74 = SPORT UTILITY 4-DR	ERH = Engine - 4.0L Power Tech I-6 EVA = Engine- 4.7L V8 MPI EVC = Engine - 4.7L HO V8 MPI ER0 = All 4.0L 6 Cyl. Gas EV0 = All 4.7L Gas	DGK = 4 Speed Auto, 42RE DGQ = 5 Speed Auto, 45RFE DG0 = All Automatic Transmissions

Wiring - Body & Acessories
Figure 8-1510

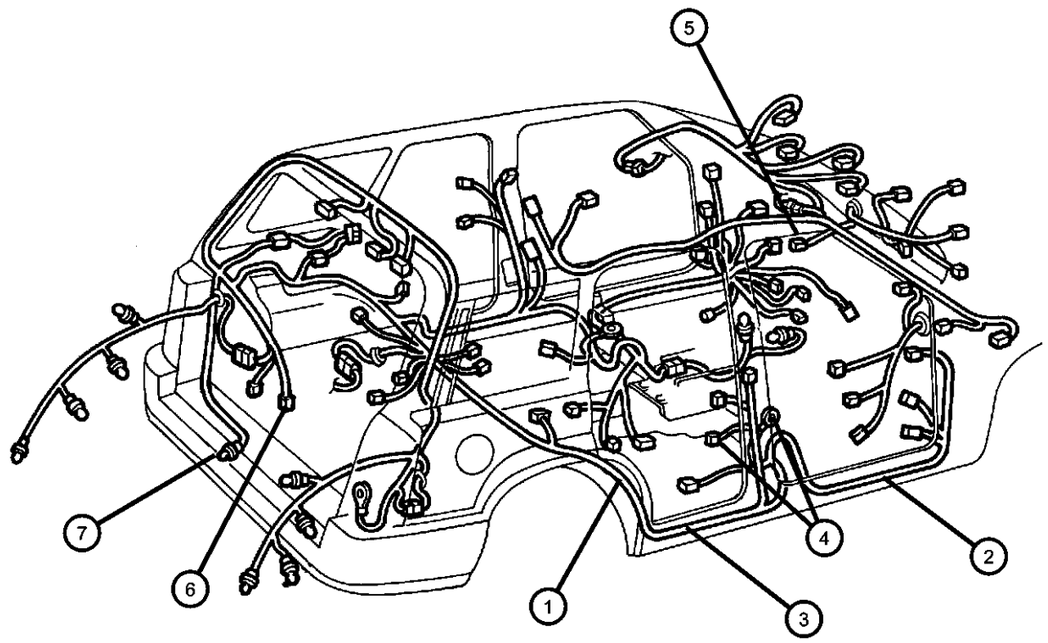

ITEM	PART NUMBER	QTY	LINE	SERIES	BODY	ENGINE	TRANS	TRIM	DESCRIPTION
1									WIRING, Body
	56042982AE	1							with Side Airbags & 6 Way Driver Power Seat, Left
	56042983AF	1							with Side Airbags & without Power Seat, Left
	56042984AC	1							with Side Airbags & without Power Seat, Power Outlet, Infinity Speaker System & without 10 Disc Remote CD Changer, Right
	56042985AC	1							with Side Airbags, Power Seats & without Power Outlet, Infinity Speaker System & without 10 Disc Remote CD Changer, Right
	56042988AC	1							with 10 Disc Remote CD Changer & Side Airbag, Right
	56050059AE	1							with Power Seats, Left
	56050060AF	1							without Power Seats, Left
	56050061AC	1							without Power Seats, Power Outlet, Infinity Speaker System & without 10 Disc Remote CD Changer, Right
	56050062AC	1							with Power Seats & without Power Outlet, Infinity Speaker System & without 10 Disc Remote CD Changer, Right
	56050063AC	1							with 10 Disc Remote CD Changer & without Side Airbag, Right
2									WIRING, Front Door
	56042219AE	1							with Security Alarm, Driver Side
	56042220AE	1							(Passenger Side), Passenger Side
	56042221AE	1							without Security Alarm, Driver Side
3	56042538AG	2							WIRING, Rear Door
4									WIRING, Door Jumper
	05271294AA	1	J, T		74				Mexico, Left
	56042525AE	1		P					, Left Front Door
	56042526AE	1		P					Right Front Door
	56042527AE	1		H					with 6 Speakers or with Infinity Sound System, Right & Left
5									WIRING, Steering Wheel

GRAND CHEROKEE (WJ)

SERIES	LINE	BODY	ENGINE	TRANSMISSION
H = Laredo	T = JEEP - 2WD	74 = SPORT UTILITY 4-DR	ERH = Engine - 4.0L Power Tech I-6	DGK = 4 Speed Auto, 42RE
M = Sport	J = JEEP - 4WD		EVA = Engine- 4.7L V8 MPI	DGQ = 5 Speed Auto, 45RFE
P = Limited	U = JEEP - 4WD (RHD)		EVC = Engine - 4.7L HO V8 MPI	DG0 = All Automatic Transmissions
S = Overland			ER0 = All 4.0L 6 Cyl. Gas	
			EV0 = All 4.7L Gas	

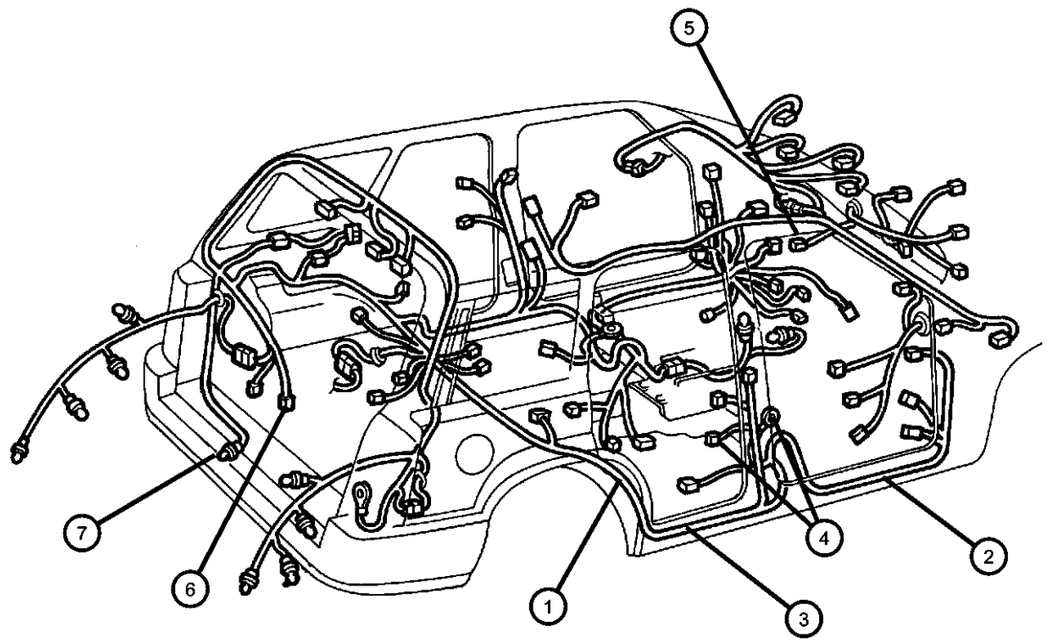

ITEM	PART NUMBER	QTY	LINE	SERIES	BODY	ENGINE	TRANS	TRIM	DESCRIPTION
	56042934AA	1		H					[SCL] [SCW]
	56042937AA	1							[SCA] [SCW]
6	56042800AB	1							WIRING, Liftgate
7	56042239AF	1							WIRING, Trailer Tow
-8	56038366AB	1							CONNECTOR, 7 Way
-9	56019823	1							ADAPTER, Trailer Tow, 7-4 Way
-10	82203600	1							COVER KIT, Trailer Tow
-11	55196754AA	1							WIRING, Overhead Lighting
-12	04793554AB	1							POWER OUTLET, Cigar Lighter
-13	04685591	1							CAP, Cigar Lighter, Quarter Trim Panel
-14									WIRING, Seat
	05015747AA	1							with Power Seats, 10 Way Memory & Map Pocket, Right
		1							With Power Seats & 10 Way Memory after 01/17/00, Right
	05083025AA	1							With Power Driver & Passenger Seats, Left
	05083027AA	1							With Power Seats, 6 Way Driver & 10 Way Memory, Left
	05083029AA	1							With Power 10 Way Heated Seats, Left
	05017929AA	1							With Power 10 Way Heated Seats up to 01/17/00, Right
		1							with Power Heated Seats, Right
	05083906AA	1							With Power Seats, 6 Way Driver, 10 Way Memory & Heated Seats, Right
	05083907AA	1							With Power Seats, 6 Way &Heated Seats, Left
-15	05016560AA	1							WIRING, Sunroof
-16	55196753AA	1							WIRING, Overhead Lighting, Assist Handles, Assist Handles
-17	05073040AA	1							HARNESS, Adjustable Brake Pedal
-18	05073371AA	1							HARNESS, Wiring, A/C Heater
-19									WIRING, Air Bag Adapter
	55315071AA	2							Side Air Bags

GRAND CHEROKEE (WJ)

SERIES	LINE	BODY	ENGINE	TRANSMISSION
H = Laredo M = Sport P = Limited S = Overland	T = JEEP - 2WD J = JEEP - 4WD U = JEEP - 4WD (RHD)	74 = SPORT UTILITY 4-DR	ERH = Engine - 4.0L Power Tech I-6 EVA = Engine- 4.7L V8 MPI EVC = Engine - 4.7L HO V8 MPI ER0 = All 4.0L 6 Cyl. Gas EV0 = All 4.7L Gas	DGK = 4 Speed Auto, 42RE DGQ = 5 Speed Auto, 45RFE DG0 = All Automatic Transmissions

ITEM	PART NUMBER	QTY	LINE	SERIES	BODY	ENGINE	TRANS	TRIM	DESCRIPTION
	56050035AD	1							To Air Bag Control Module with Side Air Bags
	56050036AC	1							To Air Bag Control Module without Side Air Bags

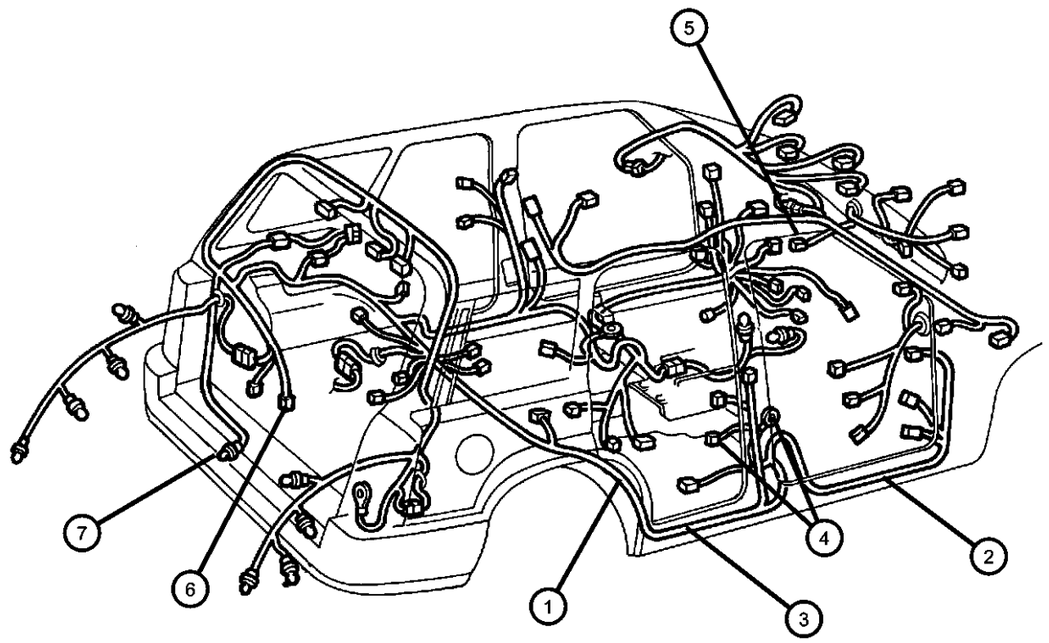

GRAND CHEROKEE (WJ)

SERIES	LINE	BODY	ENGINE	TRANSMISSION
H = Laredo M = Sport P = Limited S = Overland	T = JEEP - 2WD J = JEEP - 4WD U = JEEP - 4WD (RHD)	74 = SPORT UTILITY 4-DR	ERH = Engine - 4.0L Power Tech I-6 EVA = Engine- 4.7L V8 MPI EVC = Engine - 4.7L HO V8 MPI ER0 = All 4.0L 6 Cyl. Gas EV0 = All 4.7L Gas	DGK = 4 Speed Auto, 42RE DGQ = 5 Speed Auto, 45RFE DG0 = All Automatic Transmissions

ITEM	PART NUMBER	QTY	LINE	SERIES	BODY	ENGINE	TRANS	TRIM	DESCRIPTION
Notes: [ER0]=4.0L Engine									
-1	05013930AD	1							WIRING PACKAGE, Underhood Connector Repair, For Electrical Connector Repair Information visit the World Wide Web at http://dto.vftis.com/mopar/dis-claimer.asp
-2	04364392	1				ER0			TUBE, Convoluted
-3									STRAP, Tie
	04856502	1							Black Nylon 11.5‘ length
	J4175376	3							
-4									CLIP, Wiring
	06015327	1				ER0, EV0			Sensor Wiring
	56019959	1	T				DGQ		Transmission Wiring
-5	56038591AB	1				EV0			STRAP, Ground

For Electrical Connector Repair Information visit the World Wide Web at

http://dto.vftis.com/mopar/disclaimer.asp

GRAND CHEROKEE (WJ)

SERIES	LINE	BODY	ENGINE	TRANSMISSION
H = Laredo M = Sport P = Limited S = Overland	T = JEEP - 2WD J = JEEP - 4WD U = JEEP - 4WD (RHD)	74 = SPORT UTILITY 4-DR	ERH = Engine - 4.0L Power Tech I-6 EVA = Engine- 4.7L V8 MPI EVC = Engine - 4.7L HO V8 MPI ER0 = All 4.0L 6 Cyl. Gas EV0 = All 4.7L Gas	DGK = 4 Speed Auto, 42RE DGQ = 5 Speed Auto, 45RFE DG0 = All Automatic Transmissions

Power Distribution Center Repair
Figure 8-1610

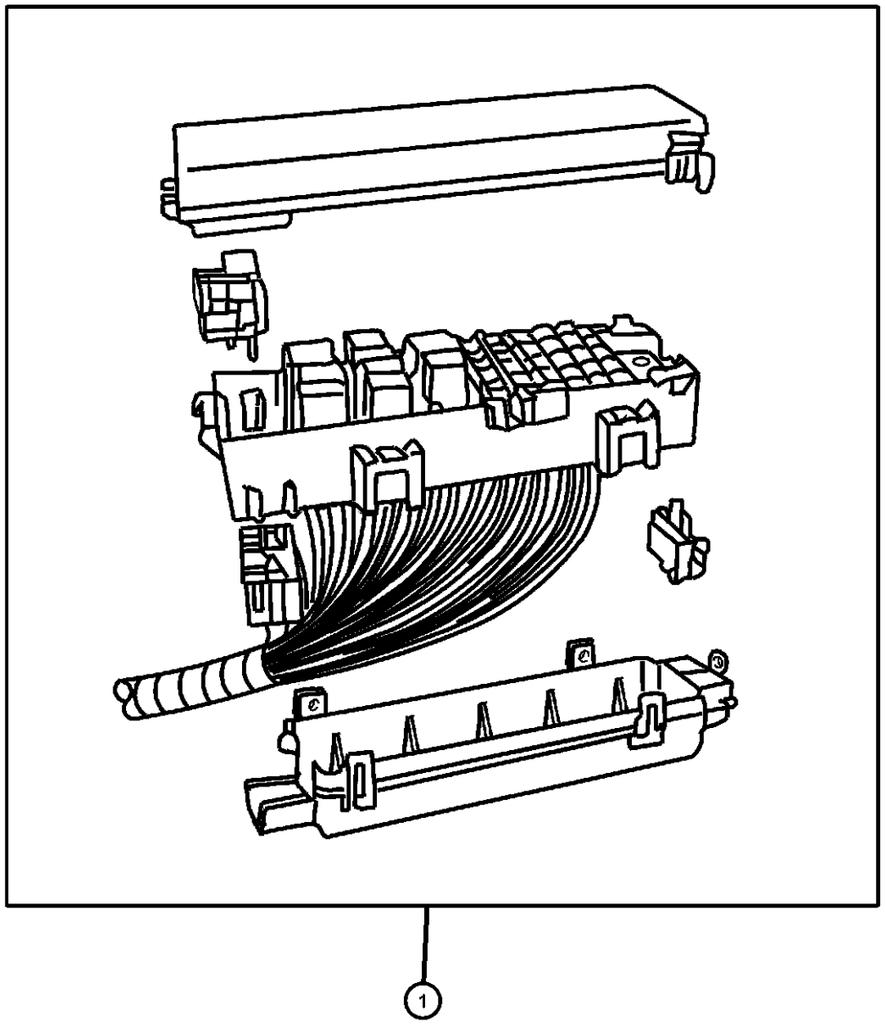

ITEM	PART NUMBER	QTY	LINE	SERIES	BODY	ENGINE	TRANS	TRIM	DESCRIPTION
1	05014460AB	1							REPAIR KIT, Power Distribution Center

GRAND CHEROKEE (WJ)

SERIES	LINE	BODY	ENGINE	TRANSMISSION
H = Laredo M = Sport P = Limited S = Overland	T = JEEP - 2WD J = JEEP - 4WD U = JEEP - 4WD (RHD)	74 = SPORT UTILITY 4-DR	ERH = Engine - 4.0L Power Tech I-6 EVA = Engine- 4.7L V8 MPI EVC = Engine - 4.7L HO V8 MPI ER0 = All 4.0L 6 Cyl. Gas EV0 = All 4.7L Gas	DGK = 4 Speed Auto, 42RE DGQ = 5 Speed Auto, 45RFE DG0 = All Automatic Transmissions

Spark Plugs - Coils
Figure 8-1910

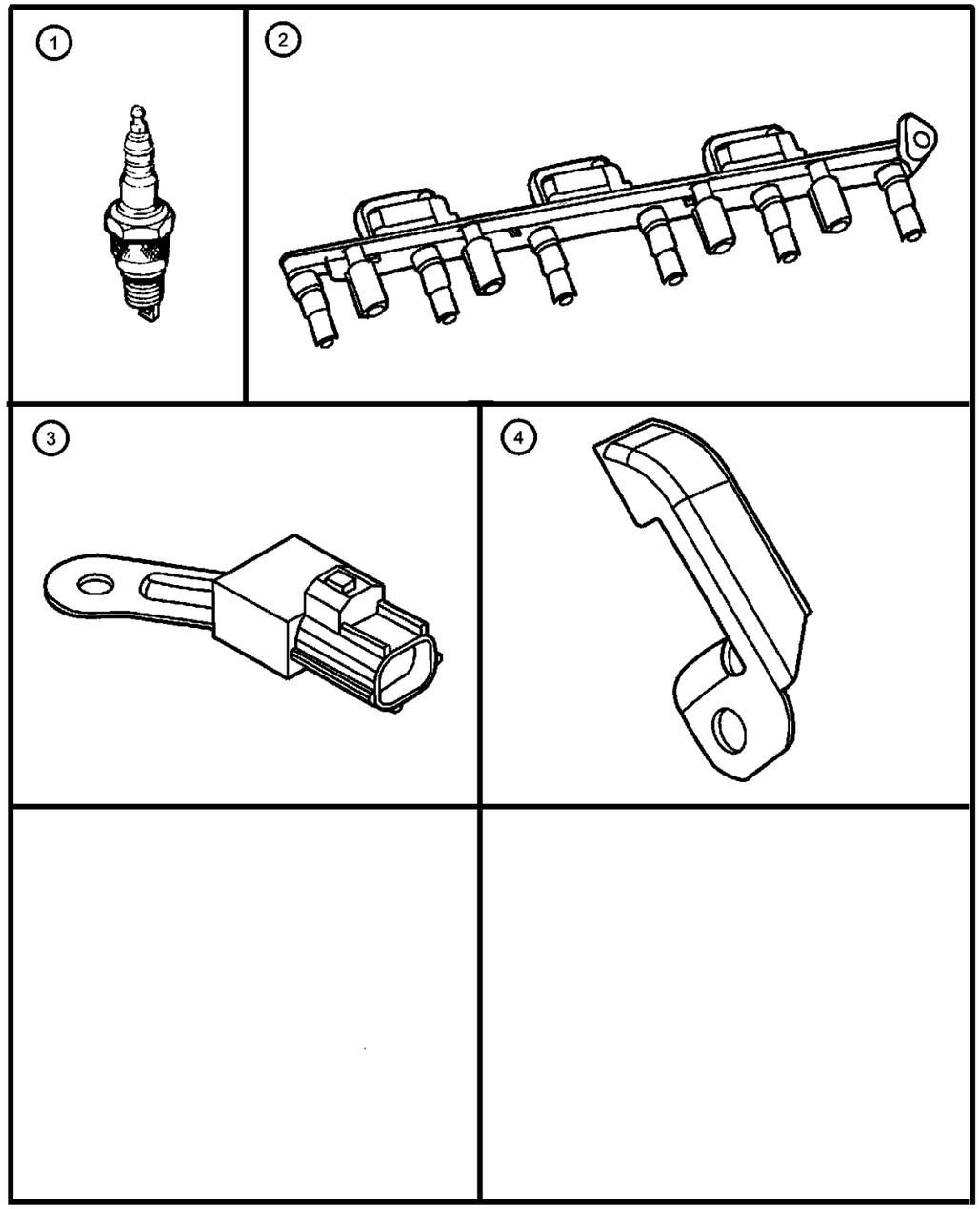

ITEM	PART NUMBER	QTY	LINE	SERIES	BODY	ENGINE	TRANS	TRIM	DESCRIPTION
Notes:									
[ER0]=4.0L Engine									
[ERH]=4.0L Power Tech Engine									
[EV0]=4.7L Engine									
[EVA]=4.7L Power Tech Engine V8									
[EVC]=4.7L Power Tech HO Engine V8									
[DG0]=Automatic Transmission									
1									SPARK PLUG
	SP000ZFR5N	6				ER0			
	SPRC12MCC4	8				EVA			
	SPRC7PYCB4	8				EVC			
2									COIL, Ignition
	56028138AD	8				EV0			
	56041476AA	1				ER0			
3									CAPACITOR, Ignition
	56041889AA	1				ERH			
		2				EV0			
4	56041388AA	1				ER0	DG0		SHIELD, Wiring
-5	06102146AA	4				ER0			SCREW AND WASHER, Ignition Coil Mounting

GRAND CHEROKEE (WJ)

SERIES	LINE	BODY	ENGINE	TRANSMISSION
H = Laredo	T = JEEP - 2WD	74 = SPORT UTILITY 4-DR	ERH = Engine - 4.0L Power Tech I-6	DGK = 4 Speed Auto, 42RE
M = Sport	J = JEEP - 4WD		EVA = Engine- 4.7L V8 MPI	DGQ = 5 Speed Auto, 45RFE
P = Limited	U = JEEP - 4WD (RHD)		EVC = Engine - 4.7L HO V8 MPI	DG0 = All Automatic Transmissions
S = Overland			ER0 = All 4.0L 6 Cyl. Gas	
			EV0 = All 4.7L Gas	

Group - 08A

Instrument Panel and Radios and Consoles

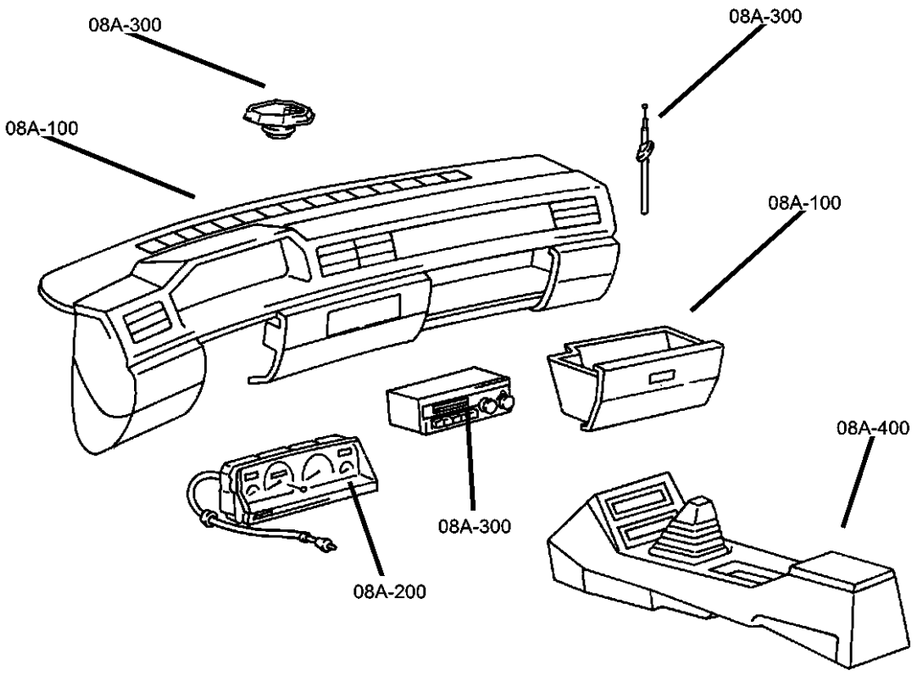

08A-100 Instrument Panel	08A-200 Instrument Panel Cluster	08A-300 Radio, Antenna, and Speakers	08A-400 Consoles
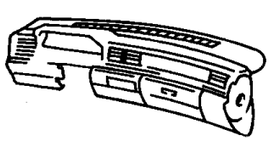	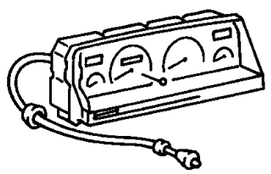	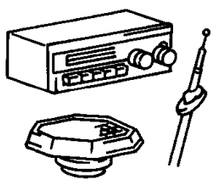	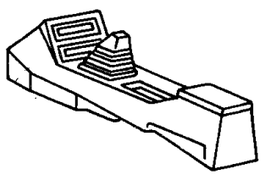

Group - 08A Instrument Panel and Radios and Consoles

Illustration Title — Group-Fig. No.

Instrument Panel
Instrument Panel ..... Fig. 08A - 110

Instrument Panel Cluster
Instrument Cluster ..... Fig. 08A - 210

Radio, Antenna, and Speakers
Radios ..... Fig. 08A - 310
Antenna ..... Fig. 08A - 320
Speakers ..... Fig. 08A - 325

Consoles
Floor Console ..... Fig. 08A - 410
Overhead Console ..... Fig. 08A - 420

Instrument Panel
Figure 08A-110

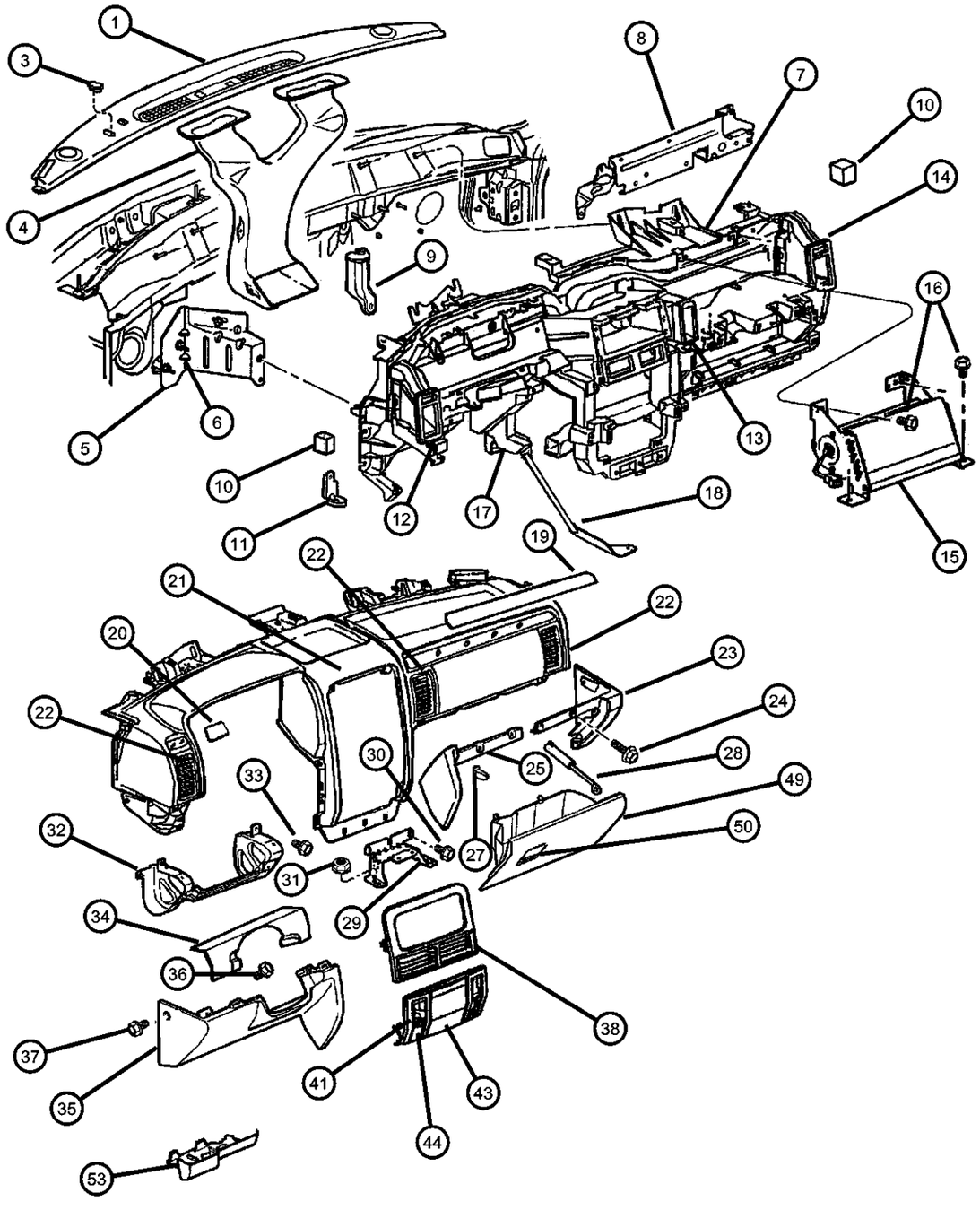

ITEM	PART NUMBER	QTY	LINE	SERIES	BODY	ENGINE	TRANS	TRIM	DESCRIPTION
1									COVER, Instrument Panel
	0QR20WL8AD	1							[L5]
	0QR20XD-VAD	1							[DB] [DV]
	0QR20XTMAD	1							[T5]
-2	06505675AA	3							CLIP, Molding, I/Panel Top Cover to Top Pad Attaching
3									PLUG, Solar Sensor
	5EL11WL8	1							[L5]
	5EL11XDV	1							[DB] [DV]
	5EL11XTM	1							[T5]
4	55116014	1							DUCT, Defroster
5	55116395AC	1							BRACKET, Instrument Panel
6	55116395AC	1							NUT, M6x1, (NOT SERVICED)
7	55116407AC	1							DUCT, Instrument Panel, Structural
8	55116373AB	1							BRACKET, Instrument Panel, C-Chanel Cover
9	55116397AA	1							BRACKET, Instrument Panel
10									SPACER
	52850582AA	1							Right
	52850583AA	1							Left
11	55116822AA	1							BRACKET, Courtesy Lamp
12	55116287AB	1							DUCT, Instrument Panel, Extension Left
13	55116285AA	1							DUCT, Instrument Panel, Extension In Board
14	55116286AB	1							DUCT, Instrument Panel, Extension Right
15	55116438AA	1							AIR BAG, Passenger
16	55116438AA	1							SCREW, Hex Head, (NOT SERVICED)
17	55116569AA	1							BRACKET, Instrument Panel, Steering Column Support
18	55116569AA	1							STRAP, Serviced in Assembly, (NOT SERVICED)
19									BEZEL, Instrument Panel
	55116482AA	1							Spartan Burl, Passenger
	55116509AA	1							Brush Aluminum, Passenger

GRAND CHEROKEE (WJ)

SERIES	LINE	BODY	ENGINE	TRANSMISSION
H = Laredo M = Sport P = Limited S = Overland	T = JEEP - 2WD J = JEEP - 4WD U = JEEP - 4WD (RHD)	74 = SPORT UTILITY 4-DR	ERH = Engine - 4.0L Power Tech I-6 EVA = Engine- 4.7L V8 MPI EVC = Engine - 4.7L HO V8 MPI ER0 = All 4.0L 6 Cyl. Gas EV0 = All 4.7L Gas	DGK = 4 Speed Auto, 42RE DGQ = 5 Speed Auto, 45RFE DG0 = All Automatic Transmissions

AR = use ase required - = Non illustrrated part

Instrument Panel
Figure 08A-110

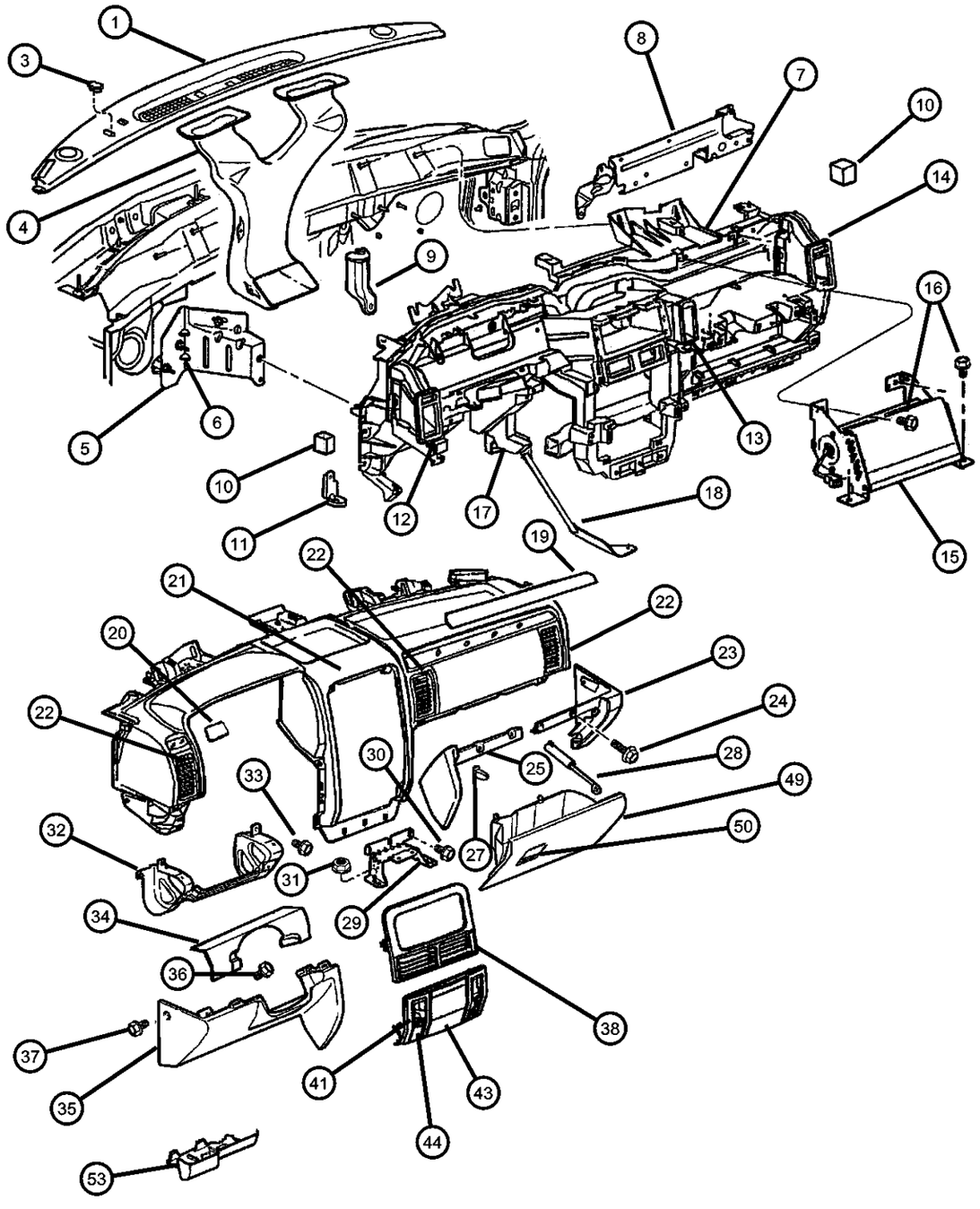

ITEM	PART NUMBER	QTY	LINE	SERIES	BODY	ENGINE	TRANS	TRIM	DESCRIPTION
	55116511AB	1							Redwood, Passenger
20									BEZEL, Instrument Panel, Armature Assembly & A/C Outlet Bezel Included
	55116475AA	1							Spartan Burl, Driver
	55116497AA	1							Brush Aluminum, Driver
	55116499AA	1							Redwood
21									PAD, Instrument Panel
	5HK981DVAA	1							[DB] [DV]
	5HK981L8AA	1							[L5]
	5HK981TMAA	1							[T5]
22									OUTLET, Air Conditioning & Heater
	5GZ121DVAB	1							[DB] (Inboard)
		1							[DV] (Inboard)
	5GZ121L8AB	1							[L5] (Inboard)
	5GZ121TMAB	1							[T5] (Inboard)
	5GZ131DVAB	1							[DB] Left
		1							[DV] Left
	5GZ131L8AB	1							[L5] (Left)
	5GZ131TMAB	1							[T5] (Left)
	5GZ141DVAB	1							[DB] Right
		1							[DV] Right
	5GZ141L8AB	1							[L5] (Right)
	5GZ141TMAB	1							[T5] (Right)
23									CAP, Instrument Panel End
	5EY42WL5AD	1							[L5]
	5EY42XDVAD	1							[DB]
		1							[DV]
		1							[DU]
	5EY42XT5AD	1							[T5]
24	06032723	6							SCREW, Self Tapping, M4.2x1.69x19.05
25									BEZEL, Instrument Panel
	5FU66WL5AB	1							[L5] Lower Right Center

GRAND CHEROKEE (WJ)

SERIES	LINE	BODY	ENGINE	TRANSMISSION
H = Laredo M = Sport P = Limited S = Overland	T = JEEP - 2WD J = JEEP - 4WD U = JEEP - 4WD (RHD)	74 = SPORT UTILITY 4-DR	ERH = Engine - 4.0L Power Tech I-6 EVA = Engine- 4.7L V8 MPI EVC = Engine - 4.7L HO V8 MPI ER0 = All 4.0L 6 Cyl. Gas EV0 = All 4.7L Gas	DGK = 4 Speed Auto, 42RE DGQ = 5 Speed Auto, 45RFE DG0 = All Automatic Transmissions

Instrument Panel
Figure 08A-110

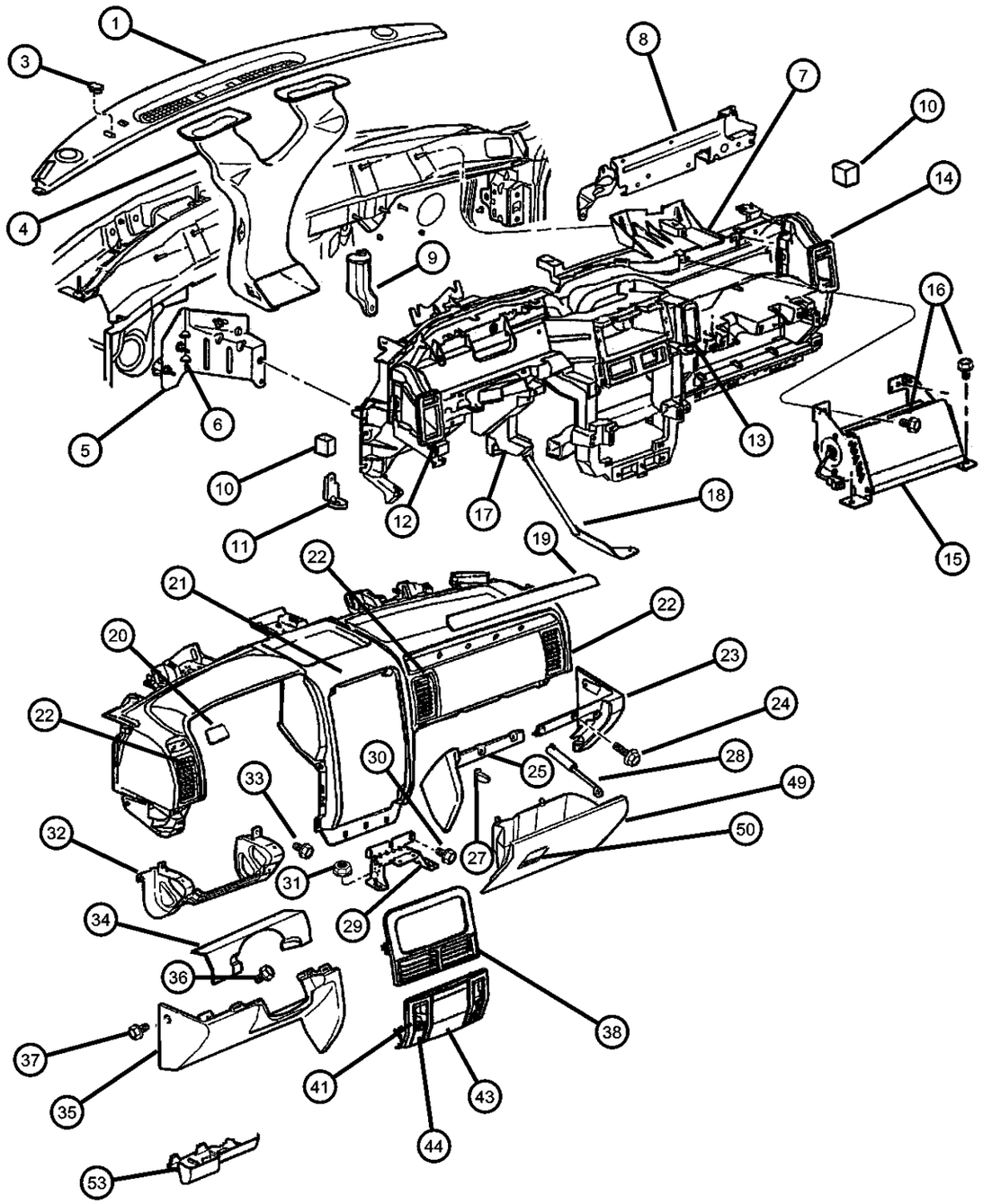

ITEM	PART NUMBER	QTY	LINE	SERIES	BODY	ENGINE	TRANS	TRIM	DESCRIPTION
	5FU66XDVAB	1							[DB] [DV] Lower Right Center
	5FU66XT5AB	1							[T5] Lower Right Center
-26	06101946	3							SCREW, Tapping
27									STRIKER, Glove Box Door Latch
	55116374AA	1							Right
	55116375AA	1							Left
28	55116375AA	1							DAMPENER, Glove Box Door, (NOT REQUIRED)
29									BRACKET, Instrument Panel
	55116041	1							Up to 02/19/01
	55116041AB	1							02/19/01 & After
30	55116041AB	1							SCREW, M6X1X25, (NOT SERVICED),
31	06504572	2							NUT AND WASHER, Hex Nut-Coned Washer, M8 x 1.25
32	55116391AA	1							BRACKET, Instrument Panel
33	55116391AA	1							SCREW, Self Tapping, M6x1x15, (NOT SERVICED)
34									BEZEL, Instrument Cluster
	5FZ23WL8AD	1							[L5] without Adjustable Pedal
	5FZ23XDVAD	1							[DV] without Adjustable Pedal
	5FZ23XTMAD	1							[T5] without Adjustable Pedal
	5HK51WL8AA	1							[L5] with Adjustable Pedal
	5HK51XDVAA	1							[DV] with Adjustable Pedal
	5HK51XTMAA	1							[T5] with Adjustable Pedal
35									COVER, Instrument Panel, Steering Column Opening
	5EY40WL5AE	1							[L5]
	5EY40XDVAE	1							[DB] [DV]
	5EY40XT5AE	1							[T5]
36	06101946	3							SCREW, Tapping
37	06032723	6							SCREW, Self Tapping, M4.2x1.69x19.05
38									BEZEL, Instrument Panel, Upper, Radio Bezel Opening
	55116479AB	1							Woodgrain (Spartan Burl)
	55116506AA	1							Brush Aluminum

GRAND CHEROKEE (WJ)

SERIES	LINE	BODY	ENGINE	TRANSMISSION
H = Laredo M = Sport P = Limited S = Overland	T = JEEP - 2WD J = JEEP - 4WD U = JEEP - 4WD (RHD)	74 = SPORT UTILITY 4-DR	ERH = Engine - 4.0L Power Tech I-6 EVA = Engine- 4.7L V8 MPI EVC = Engine - 4.7L HO V8 MPI ER0 = All 4.0L 6 Cyl. Gas EV0 = All 4.7L Gas	DGK = 4 Speed Auto, 42RE DGQ = 5 Speed Auto, 45RFE DG0 = All Automatic Transmissions

AR = use ase required - = Non illustrrated part

Instrument Panel
Figure 08A-110

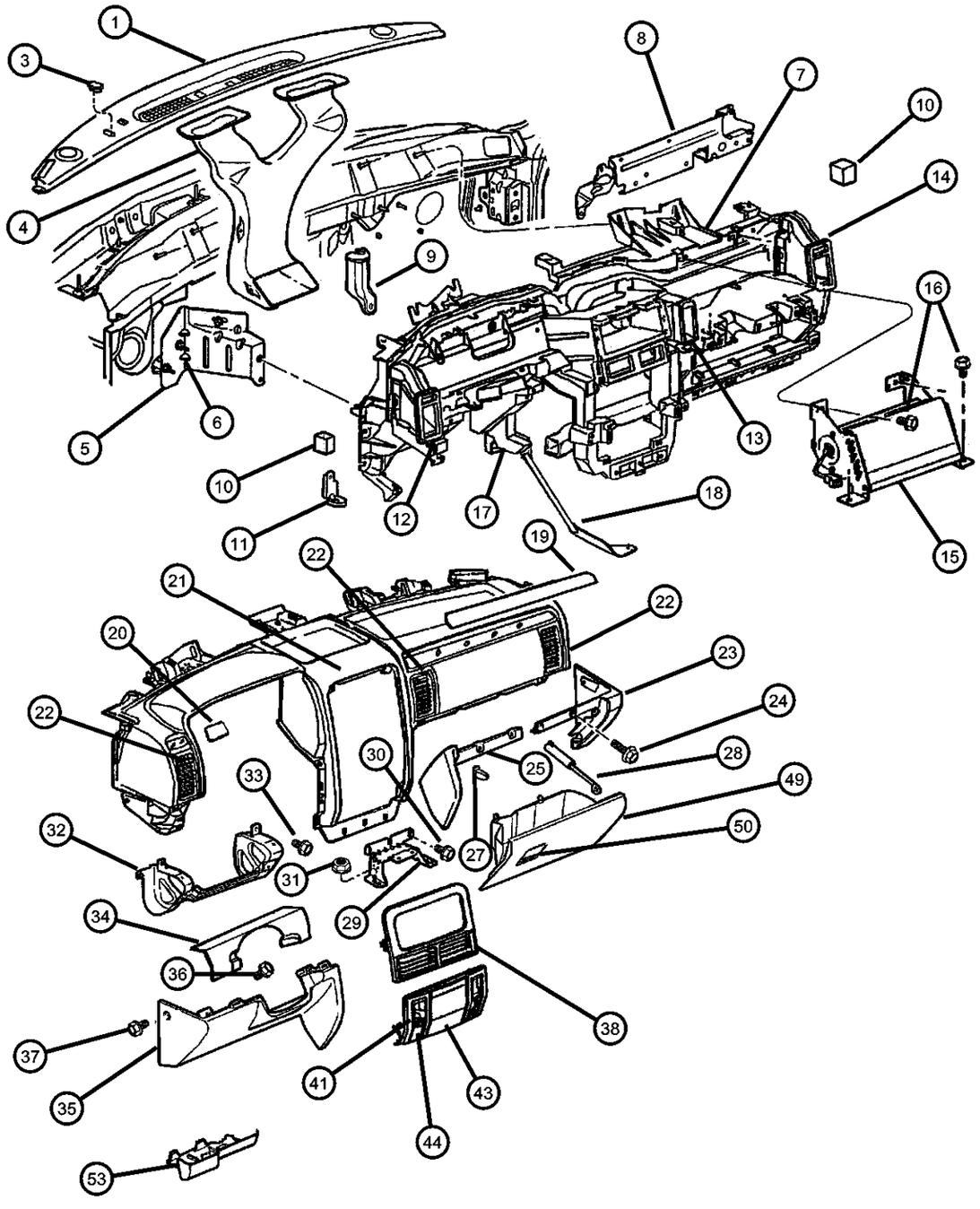

ITEM	PART NUMBER	QTY	LINE	SERIES	BODY	ENGINE	TRANS	TRIM	DESCRIPTION
	55116519AB	1							Redwood
-39	06505852AA	4							CLIP, Trim Panel, Upper center bezel attaching
-40	55116366AB	1							ADAPTER, A/C And Heater Unit
41									BEZEL, Instrument Panel, Lower
	05014055AH	1							Black
	05019799AB	1							Woodgrain (Spartan Burl)
	55116280AH	1							Black without Heated Seat
-42	06504664	1							CLIP, Instrument Panel
43	55116061	1							RECEPTACLE, Ash Receiver
44	55116273AA	1							DOOR, Power Outlet
-45	05269360	1							HOOD, Ash Receiver Lamp
-46	04793554	1							POWER OUTLET, Cigar Lighter
-47	04793551	1							BASE, Cigar Lighter
-48	04793555	2							RING, Cigar Lighter Mounting
49									GLOVE BOX, Instrument Panel
	5EY381DVAB	1							[DB] [DV]
	5EY381L5AB	1							[L5]
	5EY381T5AB	1							[T5]
50									LATCH, Glovebox Door
	5FK941DV	1							[DB] [DV]
	5FK941T5	1							[T5]
	5FK94WL5	1							[L5]
-51									BUMPER, Glove Box Door
	04524343	2							
	55116440AA	1							Glove Box Catch
-52	04565022	1							SWITCH AND LAMP, Glove Box
53									COVER, Fuse Access
	55116219AC	1							
	55116564AE	1							With Adjustable Pedal
-54	55196762AA	1							PULLER, Fuse
-55									LABEL, Air Bag Warning
	04595748AA	1							Glovebox Door (English)

GRAND CHEROKEE (WJ)

SERIES	LINE	BODY	ENGINE	TRANSMISSION
H = Laredo M = Sport P = Limited S = Overland	T = JEEP - 2WD J = JEEP - 4WD U = JEEP - 4WD (RHD)	74 = SPORT UTILITY 4-DR	ERH = Engine - 4.0L Power Tech I-6 EVA = Engine- 4.7L V8 MPI EVC = Engine - 4.7L HO V8 MPI ER0 = All 4.0L 6 Cyl. Gas EV0 = All 4.7L Gas	DGK = 4 Speed Auto, 42RE DGQ = 5 Speed Auto, 45RFE DG0 = All Automatic Transmissions

AR = use ase required - = Non illustrrated part

Instrument Panel
Figure 08A-110

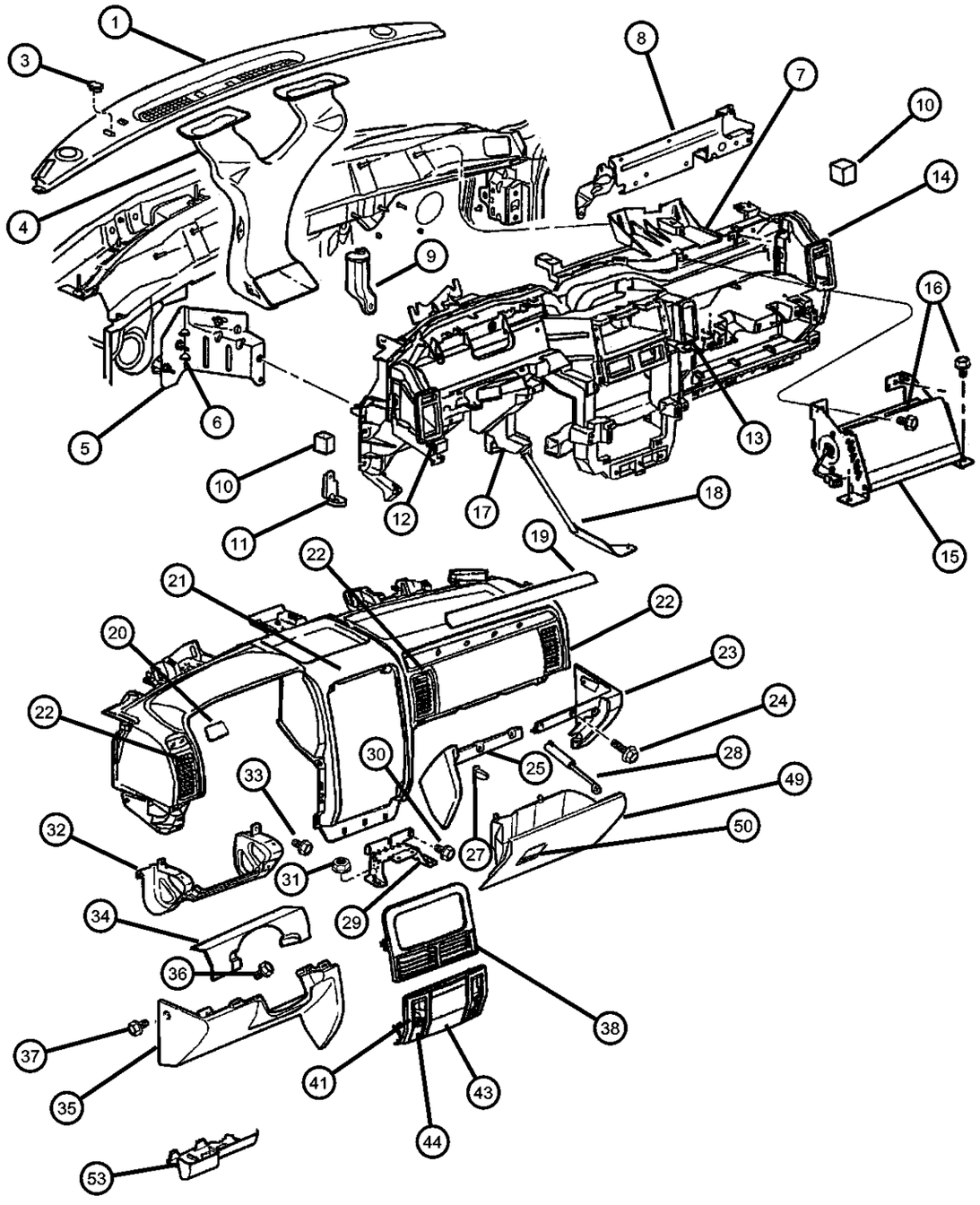

ITEM	PART NUMBER	QTY	LINE	SERIES	BODY	ENGINE	TRANS	TRIM	DESCRIPTION
	04595749AA	1							Glovebox Door (Bilingual)
-56	04793554	1							POWER OUTLET, Cigar Lighter, Quarter Trim Panel
-57	04685370	1							KNOB AND ELEMENT, Cigar Lighter
-58									CAP, Cigar Lighter
	04685591	1							Cap/Tether & Mount Ring (Cigar Lighter), Power Outlet
	56008852	1							Lighter,
-59	04897505AG	1							BEZEL, Switch, Power Outlet
-60	55116837AC	1							COVER, Mechanism Reveal, Adjustable Pedal System Cover

GRAND CHEROKEE (WJ)

SERIES	LINE	BODY	ENGINE	TRANSMISSION
H = Laredo	T = JEEP - 2WD	74 = SPORT UTILITY 4-DR	ERH = Engine - 4.0L Power Tech I-6	DGK = 4 Speed Auto, 42RE
M = Sport	J = JEEP - 4WD		EVA = Engine- 4.7L V8 MPI	DGQ = 5 Speed Auto, 45RFE
P = Limited	U = JEEP - 4WD (RHD)		EVC = Engine - 4.7L HO V8 MPI	DG0 = All Automatic Transmissions
S = Overland			ER0 = All 4.0L 6 Cyl. Gas	
			EV0 = All 4.7L Gas	

Instrument Cluster
Figure 08A-210

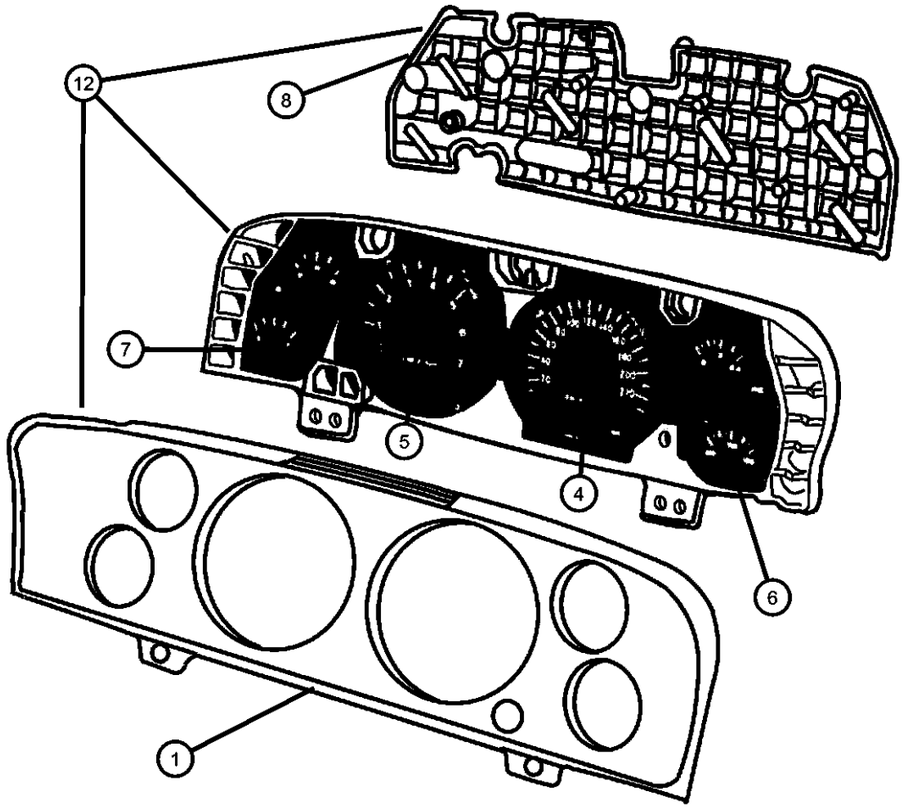

ITEM	PART NUMBER	QTY	LINE	SERIES	BODY	ENGINE	TRANS	TRIM	DESCRIPTION
Notes: [ER0]=4.0L 6 Cylinder Engine [EVA]=4.7L Power Tech V8 Engine [EVC]=4.7L Power Tech HO V8 Engine									
1									LENS, Cluster
	05073267AA	1							[ER0] [EVA] Highline with 120 MPH Primary with Tach
	05073269AA	1							[ER0] [EVA] Premium with 120 MPH Primary with Tach
		1							[EVC] with 120 MPH Primary with Tach
	05073270AA	1							[ER0] [EVA] Highline with 220 KPH Primary with Tach
	05073271AA	1							[ER0] [EVA] Premium with 220 KPH Primary with Tach
		1							[EVC] with 220 KPH Primary with Tach
-2	L000PC74	12							BULB, PC74
-3	05269529	5							BULB, PC121
4	05269529	5							GAUGE, Speedometer, Serviced with Cluster Assembly, (NOT SERVICED)
5	05269529	5							GAUGE, Tachometer, Serviced with Cluster Assembly, (NOT SERVICED)
6	05269529	5							GAUGE, Temperature And Oil, Serviced with Cluster Assembly, (NOT SERVICED)
7	05269529	5							GAUGE, Fuel And Volt, Serviced with Cluster Assembly, (NOT SERVICED)
8	05269529	5							BOARD, Circuit, Serviced with Cluster Assembly, (NOT SERVICED)
-9	04638220	1							KNOB, Odometer Reset
-10	06101946	3							SCREW, Tapping
-11	06032723	6							SCREW, Self Tapping, M4.2x1.69x19.05
12									CLUSTER, Complete Cluster Assembly w/Lens & Gauges
	56042902AD	1							[ER0] [EVA] Highline with 120 MPH Primary with Tach
	56042917AD	1							[ER0] [EVA] [EVC] Premium with 220 KPH Primary with Tach

GRAND CHEROKEE (WJ)

SERIES	LINE	BODY	ENGINE	TRANSMISSION
H = Laredo	T = JEEP - 2WD	74 = SPORT UTILITY 4-DR	ERH = Engine - 4.0L Power Tech I-6	DGK = 4 Speed Auto, 42RE
M = Sport	J = JEEP - 4WD		EVA = Engine- 4.7L V8 MPI	DGQ = 5 Speed Auto, 45RFE
P = Limited	U = JEEP - 4WD (RHD)		EVC = Engine - 4.7L HO V8 MPI	DG0 = All Automatic Transmissions
S = Overland			ER0 = All 4.0L 6 Cyl. Gas	
			EV0 = All 4.7L Gas	

Instrument Cluster
Figure 08A-210

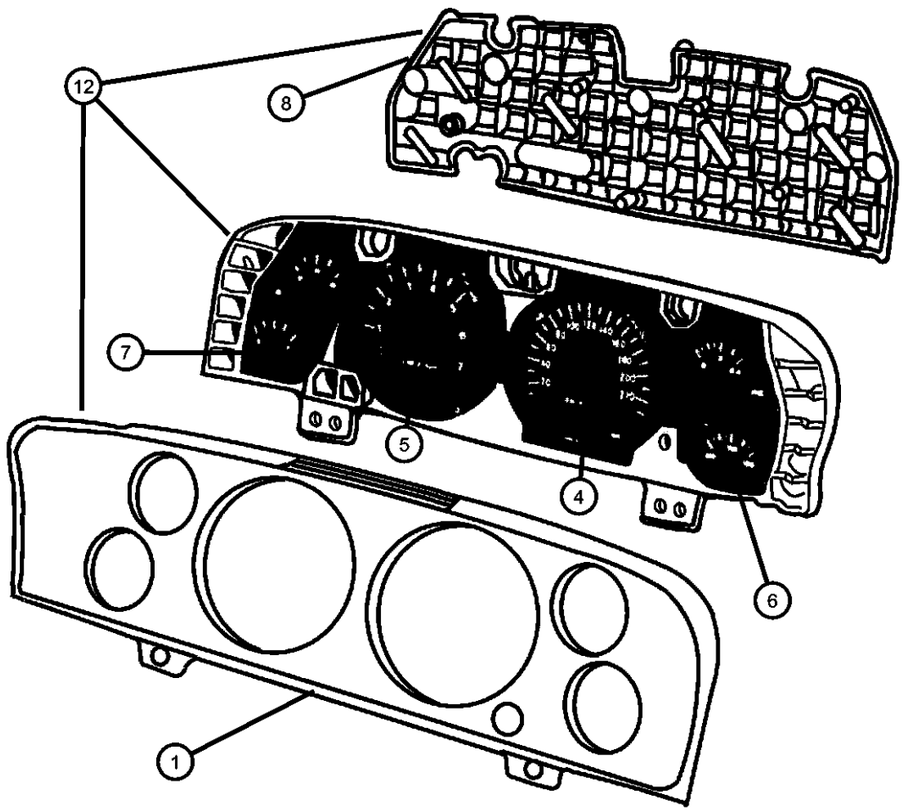

ITEM	PART NUMBER	QTY	LINE	SERIES	BODY	ENGINE	TRANS	TRIM	DESCRIPTION
	56042919AD	1							[ER0] [EVA] [EVC] Premium with 120 MPH Primary with Tach
	56042996AD	1							[EVC] with 220 KPH Primary with Tach
	56042998AD	1							[ER0] [EVA] Highline with 220 KPH Primary with Tach

GRAND CHEROKEE (WJ)

SERIES	LINE	BODY	ENGINE	TRANSMISSION
H = Laredo	T = JEEP - 2WD	74 = SPORT UTILITY 4-DR	ERH = Engine - 4.0L Power Tech I-6	DGK = 4 Speed Auto, 42RE
M = Sport	J = JEEP - 4WD		EVA = Engine- 4.7L V8 MPI	DGQ = 5 Speed Auto, 45RFE
P = Limited	U = JEEP - 4WD (RHD)		EVC = Engine - 4.7L HO V8 MPI	DG0 = All Automatic Transmissions
S = Overland			ER0 = All 4.0L 6 Cyl. Gas	
			EV0 = All 4.7L Gas	

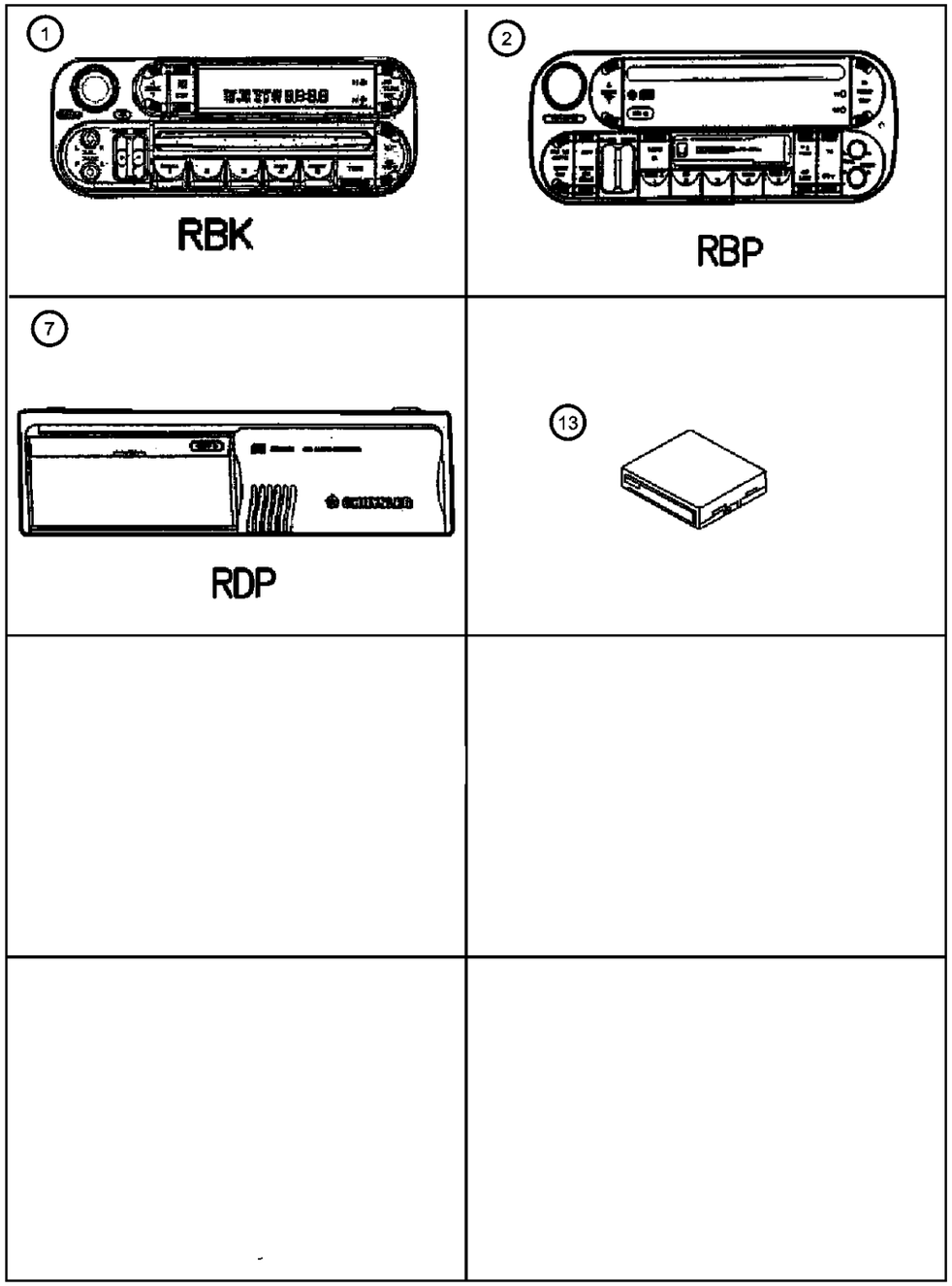

ITEM	PART NUMBER	QTY	LINE	SERIES	BODY	ENGINE	TRANS	TRIM	DESCRIPTION
Notes:									
[RBK] = AM/FM with CD/Equalizer									
[RBP] = AM/FM Cassette/CD/CD Changer									
[RDP] = Disc Changer									
[ER0] = 4.0L Engine									
[EV0] = 4.7L Engine									
1	56038589AK	1							RADIO, AM/FM with CD and Equalizer, [RBK]
2	56038586AF	1							RADIO, AM/FM/Cassette With CD, [RBP]
-3	56038555AG	1							RADIO, AM/FM with CD and Cassette, [RAZ]
-4	56038583AH	1							RADIO, AM/FM/Cassette With CD, [RBY]
-5	56038583AH	1							RADIO, AM/FM/Cassette With CD, [RBY]
-6	56038588AK	1							RADIO, AM/FM/Cassette With CD Control, [RBB]
7	56042129AG	1							CHANGER, CD, [RDP]
-8	06100047	4							NUT AND WASHER, Hex Nut-Coned Washer, M6 x 1.00
-9	00154552	1							SCREW, Hex Head, .190-16x.625
-10	06035081	1							NUT, .25-20
-11									STRAP, Radio Noise Suppression
	56038402AC	1							[EV0]
	56038499AC	1							[ER0]
-12	06035081	1							NUT, .25-20
13	56038407AF	1							AMPLIFIER, Radio, [RCE] (Mounting Bracket Serviced with Amplifier)

GRAND CHEROKEE (WJ)

SERIES	LINE	BODY	ENGINE	TRANSMISSION
H = Laredo	T = JEEP - 2WD	74 = SPORT UTILITY 4-DR	ERH = Engine - 4.0L Power Tech I-6	DGK = 4 Speed Auto, 42RE
M = Sport	J = JEEP - 4WD		EVA = Engine- 4.7L V8 MPI	DGQ = 5 Speed Auto, 45RFE
P = Limited	U = JEEP - 4WD (RHD)		EVC = Engine - 4.7L HO V8 MPI	DG0 = All Automatic Transmissions
S = Overland			ER0 = All 4.0L 6 Cyl. Gas	
			EV0 = All 4.7L Gas	

Antenna
Figure 08A-320

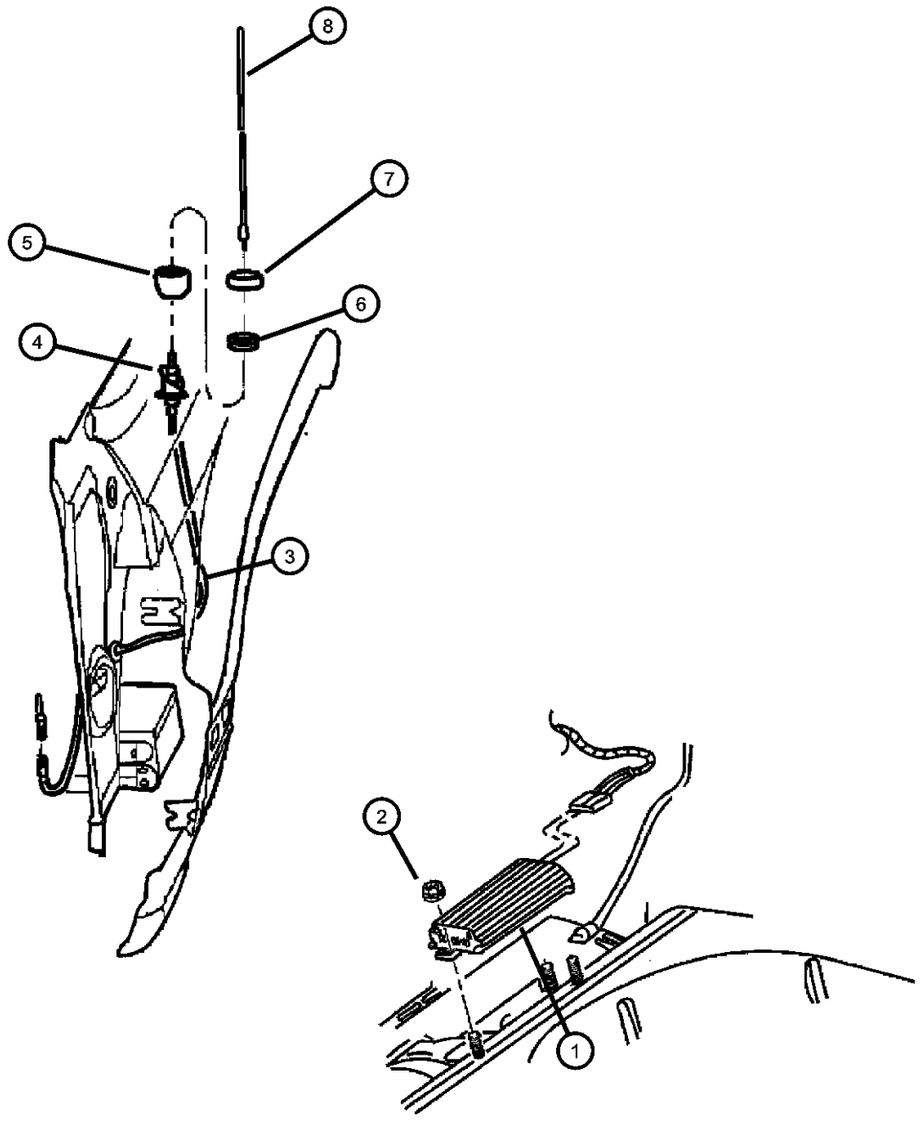

ITEM	PART NUMBER	QTY	LINE	SERIES	BODY	ENGINE	TRANS	TRIM	DESCRIPTION

Notes:
[RCE]= Infinity Speaker System
[RDD] = Antenna Fixed
[ER0] = 4.0L Engine
[EV0] = 4.7L Engine

1	56038407AE	1	AMPLIFIER, Radio, [RCE]
2	06100048	1	NUT, Hex, M6x1.00
3	56038617AB	1	CABLE, Antenna, [RDD]
4	56038412AB	1	BASE, Antenna, [RDD]
5	56009375AB	1	ESCUTCHEON, Antenna, [RDD]
6	04685301	1	CAP NUT, Antenna, Black, [RDD]
7	04685498	1	SHROUD, Antenna Cap Nut, [RDD]
8	04685574AE	1	MAST, Antenna, [RDD] Spiral Ground (Bright)

GRAND CHEROKEE (WJ)

SERIES	LINE	BODY	ENGINE	TRANSMISSION
H = Laredo M = Sport P = Limited S = Overland	T = JEEP - 2WD J = JEEP - 4WD U = JEEP - 4WD (RHD)	74 = SPORT UTILITY 4-DR	ERH = Engine - 4.0L Power Tech I-6 EVA = Engine- 4.7L V8 MPI EVC = Engine - 4.7L HO V8 MPI ER0 = All 4.0L 6 Cyl. Gas EV0 = All 4.7L Gas	DGK = 4 Speed Auto, 42RE DGQ = 5 Speed Auto, 45RFE DG0 = All Automatic Transmissions

Speakers
Figure 08A-325

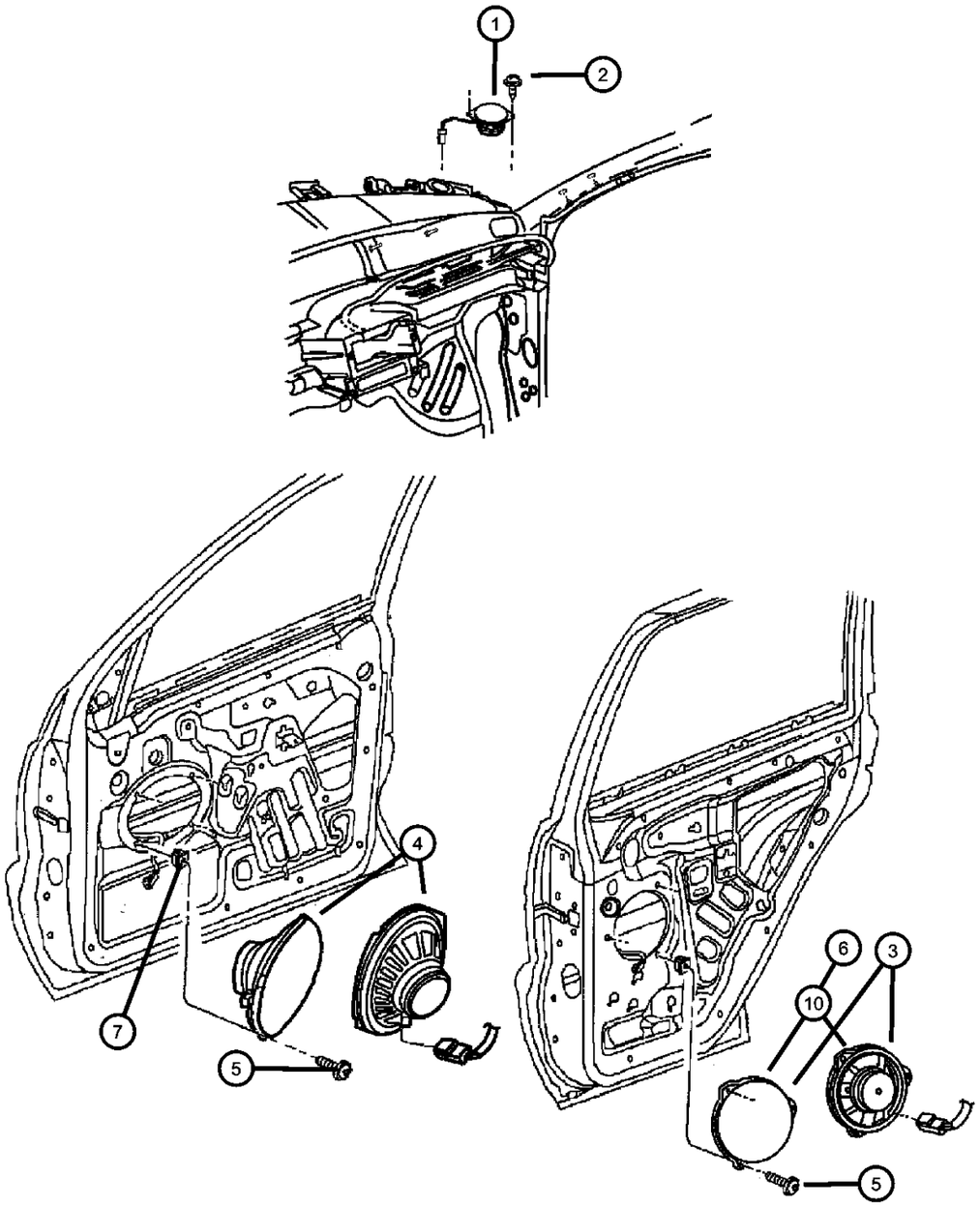

ITEM	PART NUMBER	QTY	LINE	SERIES	BODY	ENGINE	TRANS	TRIM	DESCRIPTION
Notes: [RCE]=Infinity Speaker System [RCG]=Standard Speaker System									
1	56038411AC	2							SPEAKER, Instrument Panel, [RCE] Infinity
2	06101946	3							SCREW, Tapping
3									SPEAKER, Door
	56038410AC	2							[RCE] Infinity
		2							Rear Door
4									SPEAKER, 6"X9"
	56038409AC	2							[RCE], Front
	56042131AB	2							[RCG],
5	56042131AB	2							SCREW, (NOT SERVICED),
6	56038408AC	2							SPEAKER, 6.5", [RCG] Standard, Rear
7	06036098AA	8							NUT, Plastic Snap-in, [RCE] Infinity & [RCG] Standard
-8	56038612AA	2							SPEAKER, Tweeter, [RCG] Standard
-9	05012875AA	1							NAMEPLATE, Speaker Grille, Door Speaker
10	56038657AA	2							SPEAKER, Sub Woofer, Rear Door [RCE]

GRAND CHEROKEE (WJ)

SERIES	LINE	BODY	ENGINE	TRANSMISSION
H = Laredo	T = JEEP - 2WD	74 = SPORT UTILITY 4-DR	ERH = Engine - 4.0L Power Tech I-6	DGK = 4 Speed Auto, 42RE
M = Sport	J = JEEP - 4WD		EVA = Engine- 4.7L V8 MPI	DGQ = 5 Speed Auto, 45RFE
P = Limited	U = JEEP - 4WD (RHD)		EVC = Engine - 4.7L HO V8 MPI	DG0 = All Automatic Transmissions
S = Overland			ER0 = All 4.0L 6 Cyl. Gas	
			EV0 = All 4.7L Gas	

Floor Console
Figure 08A-410

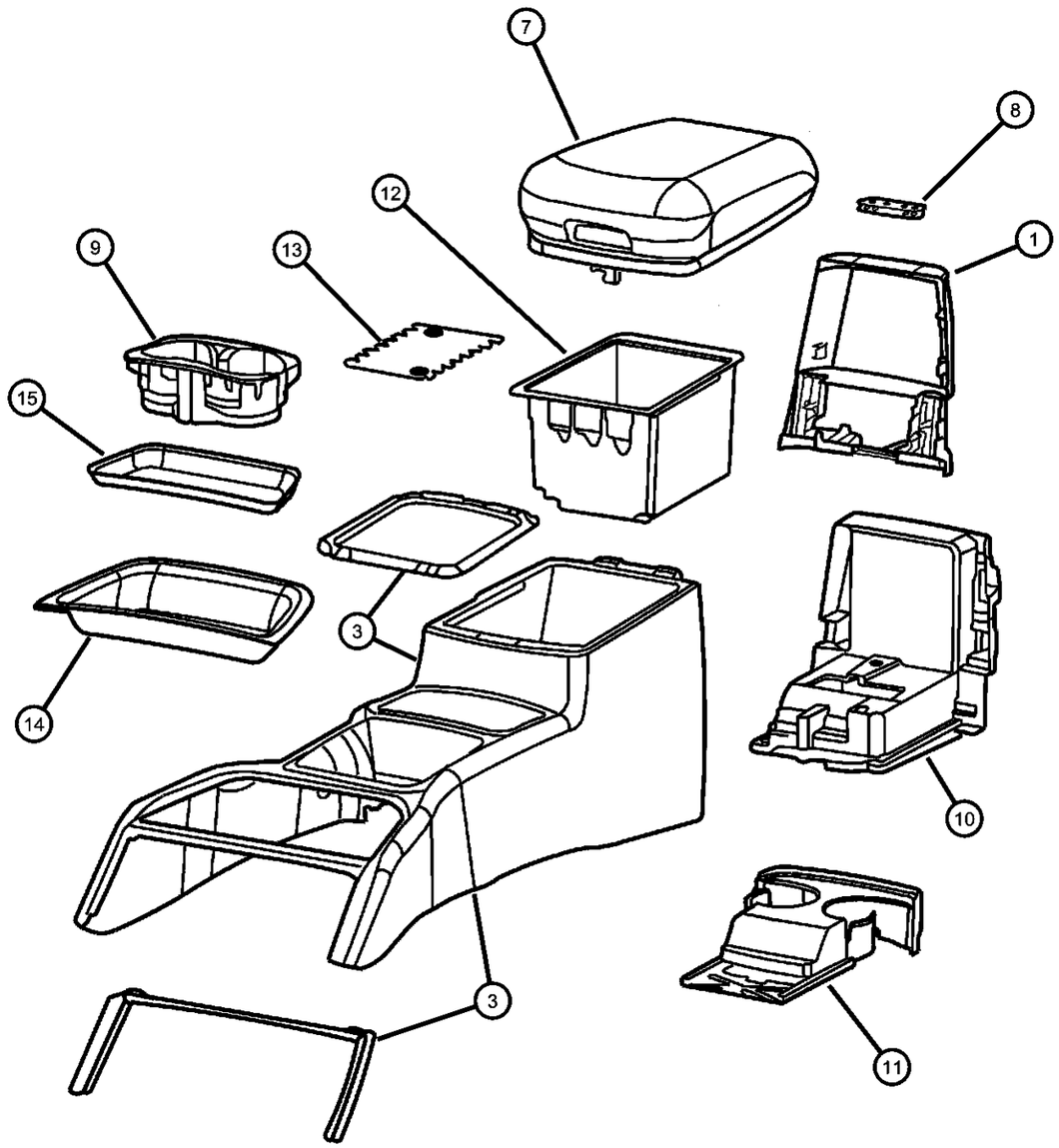

ITEM	PART NUMBER	QTY	LINE	SERIES	BODY	ENGINE	TRANS	TRIM	DESCRIPTION
1									PANEL, Console
	0QP97WL5AA	1							[L5]
	0QP97XDVAA	1							[DV]
		1							[DB]
	0QP97XT5AA	1							[T5]
-2	05014295AA	1							LATCH, Console Lock
3									CONSOLE, Base
	0SH131AZAC	1							[DB]
	0SH131DVAC	1							[DV]
	0SH131L5AC	1							[L5]
	0SH131T5AC	1							[T5]
-4	06032452	5							SCREW, Self Piercing, .164-15x.625
-5	06032838	2							CLIP, .500x.417x.500
-6	06034319	2							CLIP, .453Wx.528LGx.017THK
7									LID, Floor Console Bin
	5FW581DVAC	1							[DV]
	5FW581L5AC	1							[L5]
	5FW581T5AC	1							[T5]
	5HY071DBAA	1							[DB]
8	55196773AA	1							HINGE, Floor Console Lid
9	55196713AA	1							CUPHOLDER, Floor Console, Front
10	55196718AC	1							PLATE, Floor Console
11									CUPHOLDER, Floor Console
	5GL541DVAC	1							[DV] Rear
		1							[DB] Rear
	5GL541L5AC	1							[L5] Rear
	5GL541T5AC	1							[T5] Rear
12	55196664AB	1							BIN, Floor Console, with Mat
13	55196665	1							MAT, Storage Tray
14	55196667AB	1							BIN, Floor Console
15	55196669AB	1							MAT, Storage Tray
-16	55196669AB	1							SCREW, .164-18x.50, (NOT SERVICED)

GRAND CHEROKEE (WJ)

SERIES	LINE	BODY	ENGINE	TRANSMISSION
H = Laredo	T = JEEP - 2WD	74 = SPORT UTILITY 4-DR	ERH = Engine - 4.0L Power Tech I-6	DGK = 4 Speed Auto, 42RE
M = Sport	J = JEEP - 4WD		EVA = Engine- 4.7L V8 MPI	DGQ = 5 Speed Auto, 45RFE
P = Limited	U = JEEP - 4WD (RHD)		EVC = Engine - 4.7L HO V8 MPI	DG0 = All Automatic Transmissions
S = Overland			ER0 = All 4.0L 6 Cyl. Gas	
			EV0 = All 4.7L Gas	

Floor Console
Figure 08A-410

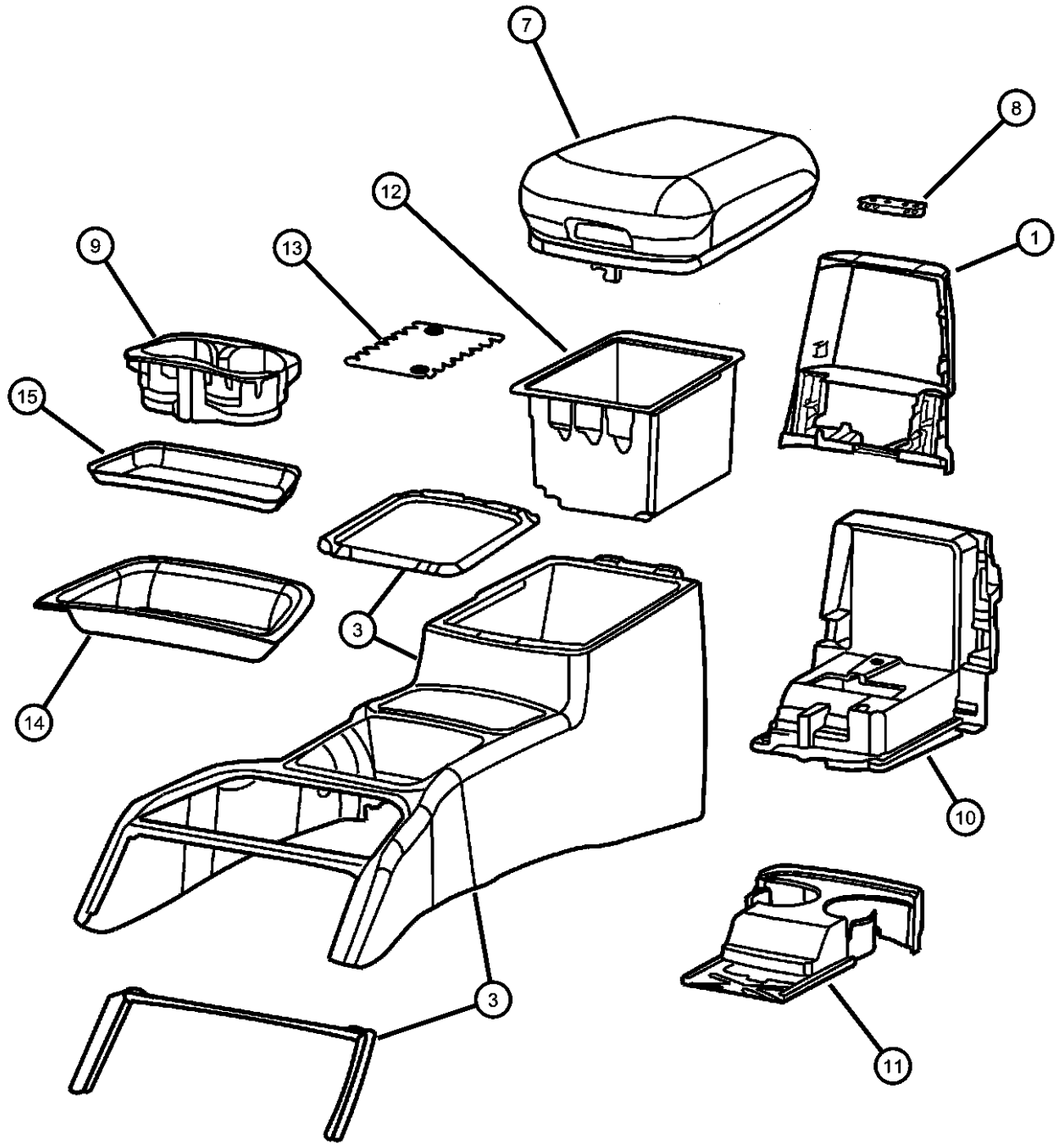

ITEM	PART NUMBER	QTY	LINE	SERIES	BODY	ENGINE	TRANS	TRIM	DESCRIPTION
-17	05066456AA	2							BUMPER, Rubber
-18	55196912AA	1							BRACKET, Floor Console

GRAND CHEROKEE (WJ)

SERIES	LINE	BODY	ENGINE	TRANSMISSION
H = Laredo	T = JEEP - 2WD	74 = SPORT UTILITY 4-DR	ERH = Engine - 4.0L Power Tech I-6	DGK = 4 Speed Auto, 42RE
M = Sport	J = JEEP - 4WD		EVA = Engine- 4.7L V8 MPI	DGQ = 5 Speed Auto, 45RFE
P = Limited	U = JEEP - 4WD (RHD)		EVC = Engine - 4.7L HO V8 MPI	DG0 = All Automatic Transmissions
S = Overland			ER0 = All 4.0L 6 Cyl. Gas	
			EV0 = All 4.7L Gas	

Overhead Console
Figure 08A-420

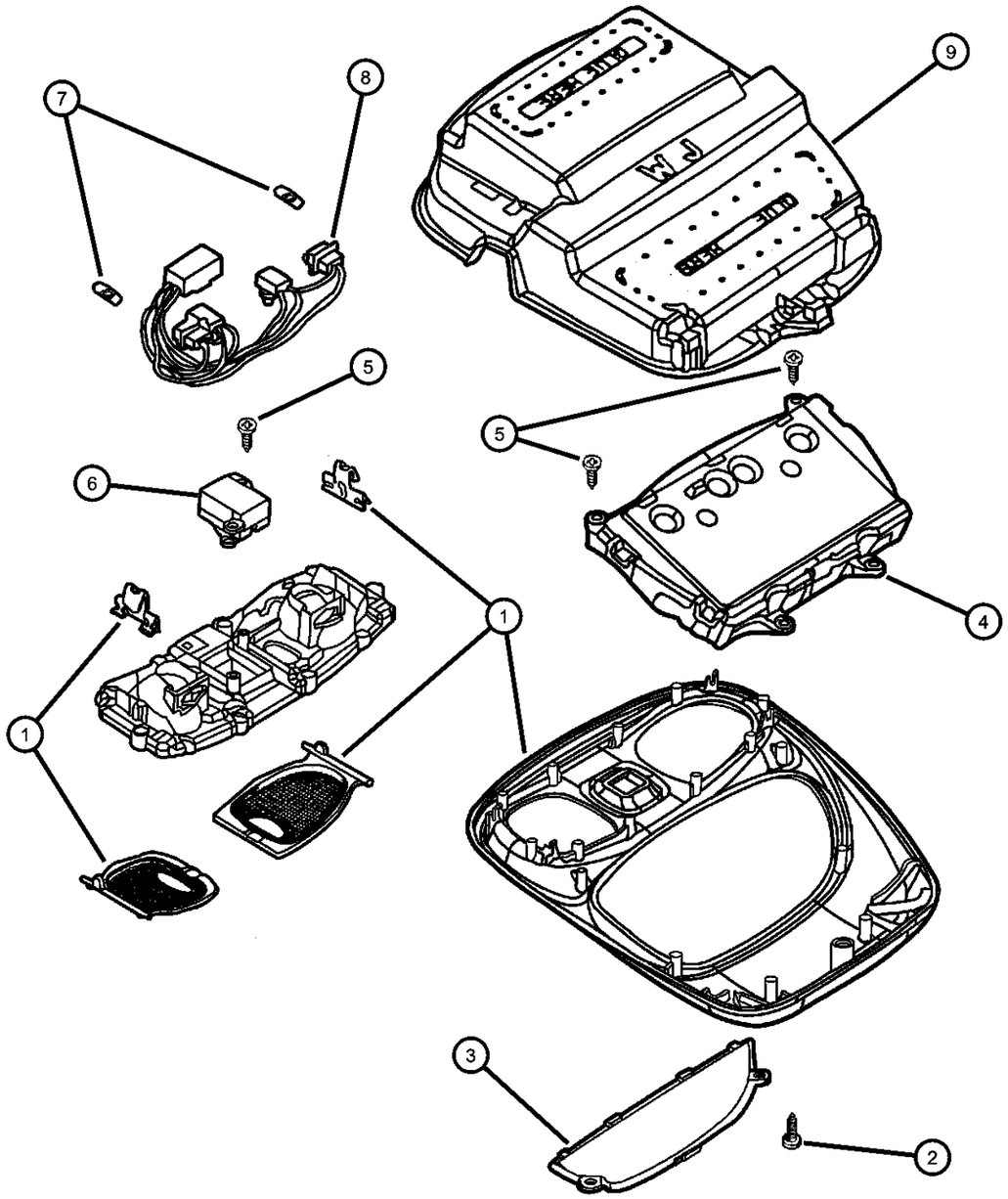

ITEM	PART NUMBER	QTY	LINE	SERIES	BODY	ENGINE	TRANS	TRIM	DESCRIPTION
1									CONSOLE, Overhead Mini, Less Electronics
	0SF611DBAA	1							[DB] Without Sunroof
	0SF611L2AA	1							[DV] Without Sunroof
		1							[L5] Without Sunroof
	0SF611T5AA	1							[T5] Without Sunroof
	0SF621DBAA	1							[DB] With Sunroof
	0SF621L2AA	1							[DV] WithSunroof
		1							[L5] With Sunroof
	0SF621T5AA	1							[T5] With Sunroof
2	0SF621T5AA	1							SCREW, .164-18x.500, (NOT SERVICED),
3	05012882AA	1							LENS, Message Center
4									MODULE, Compass Temperature
	56042749AF	1							With Universal Garage Door Opener
	56042754AF	1							Without Universal Garage Door Opener
	56042756AF	1							With Universal Garage Door Opener & Tire Pressure Monitor
5	56042756AF	1							SCREW, (NOT SERVICED),
6	56042064	1							SWITCH, 1 Gang
7	L0000192	2							BULB, 192
8	55196754AA	1							WIRING, Overhead Lighting
9	55196782AB	1							RETAINER, Headliner

GRAND CHEROKEE (WJ)

SERIES	LINE	BODY	ENGINE	TRANSMISSION
H = Laredo	T = JEEP - 2WD	74 = SPORT UTILITY 4-DR	ERH = Engine - 4.0L Power Tech I-6	DGK = 4 Speed Auto, 42RE
M = Sport	J = JEEP - 4WD		EVA = Engine- 4.7L V8 MPI	DGQ = 5 Speed Auto, 45RFE
P = Limited	U = JEEP - 4WD (RHD)		EVC = Engine - 4.7L HO V8 MPI	DG0 = All Automatic Transmissions
S = Overland			ER0 = All 4.0L 6 Cyl. Gas	
			EV0 = All 4.7L Gas	

Group - 9

Engine Mounting

009-100 Engine Mounting 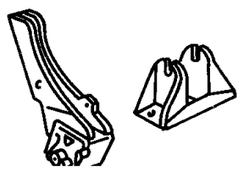			

Group - 9 Engine Mounting

Illustration Title — Group-Fig. No.

Engine Mounting

Engine Mounting, Front, 4.0 [ERH] ..... Fig. 9 - 110
Engine Mounting, Rear, 4.0 [ERH] ..... Fig. 9 - 120
Engine Mounting, Front, 4.7 [EVA,EVC] ..... Fig. 9 - 130
Engine Mounting, Rear, 4.7 [EVA,EVC] ..... Fig. 9 - 140

Engine Mounting, Front, 4.0 [ERH]
Figure 9-110

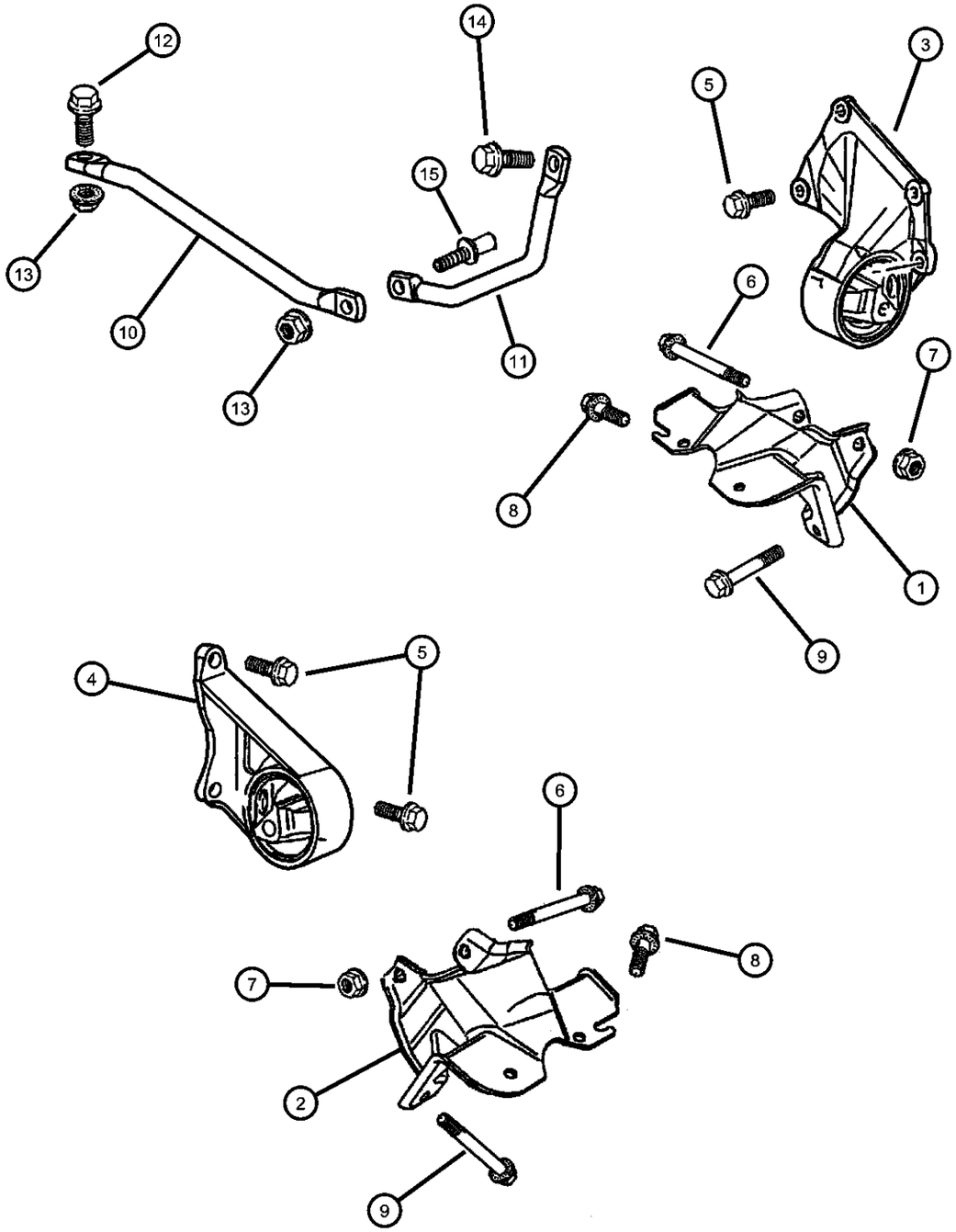

ITEM	PART NUMBER	QTY	LINE	SERIES	BODY	ENGINE	TRANS	TRIM	DESCRIPTION
Note; Sales Codes [DG0]= All Automatic Transmissions [ER0]= All 4.0L Gas Engines [EV0]= All 4.7L Gas Engines									
1	52058930AB	1				ER0, EV0			BRACKET, Engine MountRight
2	52058931AC	1				ER0, EV0			BRACKET, Engine MountLeft
3	52058928	1				ER0			INSULATOR, Engine MountRight
4	52058929AB	1				ER0			INSULATOR, Engine MountLeft
5	06503699	7				ER0			SCREW AND WASHER, Hex Head, M10x1.5x28
6	34202606	2							BOLT, Hex Head
7	06502697	2							NUT, Hex Flange Lock, M12x1.75
8	06503119	4							SCREW AND WASHER, Hex Head, M10x1.5x40
9	06505671AA	4							SCREW AND WASHER
10	52104202	1	J			ER0	DG0		BRACE, Bending Transmission, Bottom
11	52104204	1	J			ER0	DG0		BRACE, Bending Transmission
12	06022266	1				ER0			SCREW, Hex Head, .375-16x1.5
13	06502697	2							NUT, Hex Flange Lock, M12x1.75
14	06025063	1	J			ER0	DG0		SCREW AND WASHER, .375-16x1.125
15	52104250AA	1	J			ER0	DG0		BRACE, Bell Housing

GRAND CHEROKEE (WJ)

SERIES	LINE	BODY	ENGINE	TRANSMISSION
H = Laredo M = Sport P = Limited S = Overland	T = JEEP - 2WD J = JEEP - 4WD U = JEEP - 4WD (RHD)	74 = SPORT UTILITY 4-DR	ERH = Engine - 4.0L Power Tech I-6 EVA = Engine- 4.7L V8 MPI EVC = Engine - 4.7L HO V8 MPI ER0 = All 4.0L 6 Cyl. Gas EV0 = All 4.7L Gas	DGK = 4 Speed Auto, 42RE DGQ = 5 Speed Auto, 45RFE DG0 = All Automatic Transmissions

Engine Mounting, Rear, 4.0 [ERH]
Figure 9-120

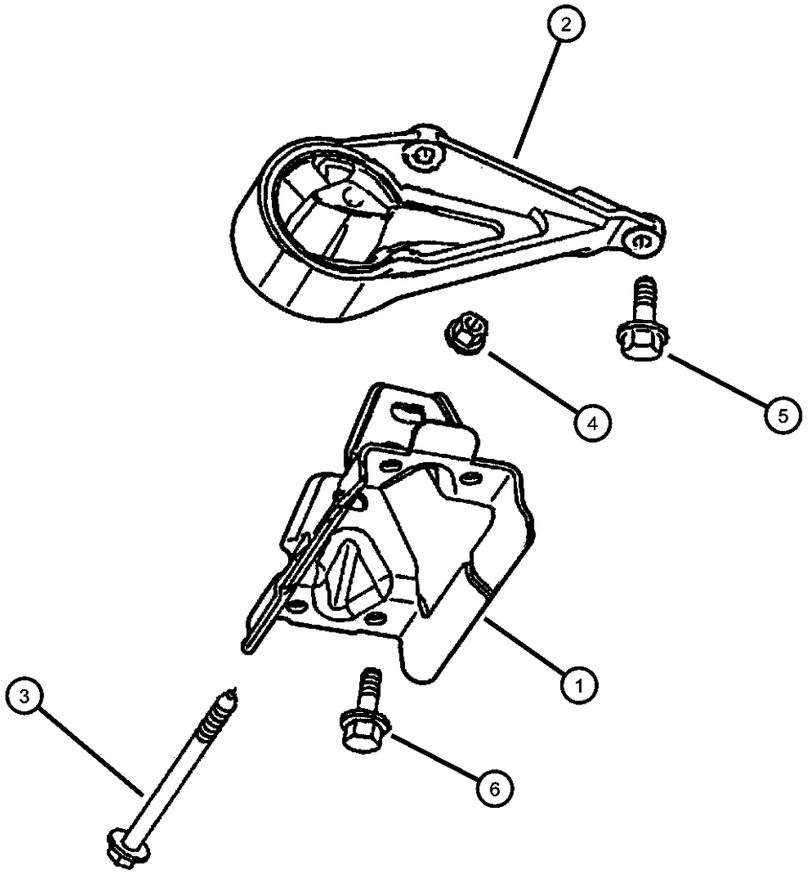

ITEM	PART NUMBER	QTY	LINE	SERIES	BODY	ENGINE	TRANS	TRIM	DESCRIPTION
Note; Sales Codes [DGK]= 4 Speed Automatic Transmissions 42RE [DG0]= All Automatic Transmissions [ER0]= All 4.0L Gas Engines [EV0]= All 4.7L Gas Engines									
1	52058988	1				ER0			BRACKET, Insulator
2									MOUNT, Transmission
	52058994	1	J			ER0	DG0		
	52058995	1	T			ER0	DGK		
3	06504681	1				ER0			BOLT
4	06502697	1				ER0, EV0			NUT, Hex Flange Lock, M12x1.75
5	06033358	4				ER0	DG0		SCREW AND WASHER, Hex Head Locking, .437-14x1.25
6	06506000AA	4							SCREW AND WASHER

GRAND CHEROKEE (WJ)

SERIES	LINE	BODY	ENGINE	TRANSMISSION
H = Laredo M = Sport P = Limited S = Overland	T = JEEP - 2WD J = JEEP - 4WD U = JEEP - 4WD (RHD)	74 = SPORT UTILITY 4-DR	ERH = Engine - 4.0L Power Tech I-6 EVA = Engine- 4.7L V8 MPI EVC = Engine - 4.7L HO V8 MPI ER0 = All 4.0L 6 Cyl. Gas EV0 = All 4.7L Gas	DGK = 4 Speed Auto, 42RE DGQ = 5 Speed Auto, 45RFE DG0 = All Automatic Transmissions

Engine Mounting, Front, 4.7 [EVA,EVC]
Figure 9-130

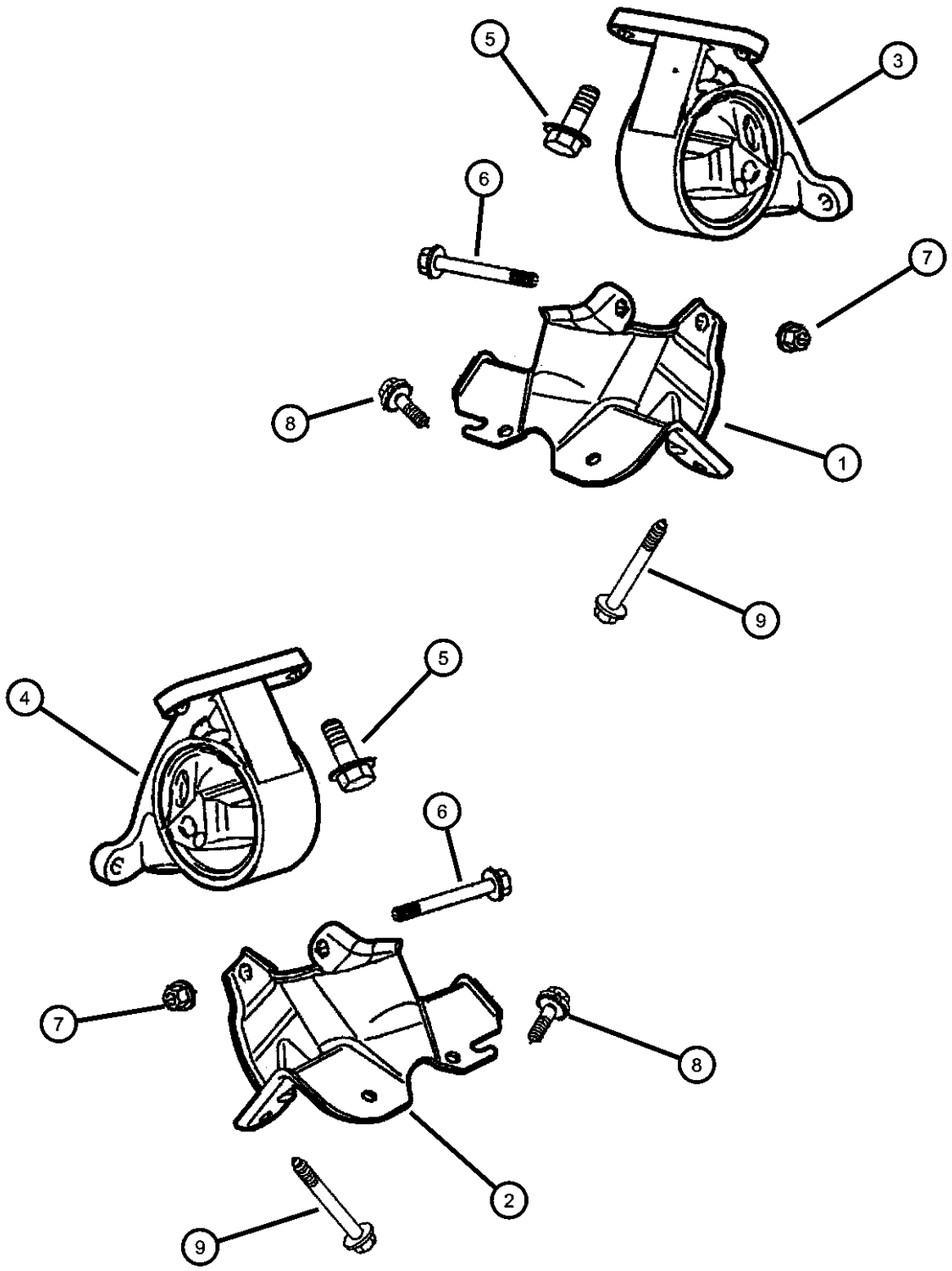

ITEM	PART NUMBER	QTY	LINE	SERIES	BODY	ENGINE	TRANS	TRIM	DESCRIPTION
Note; Sales Codes [ER0]= All 4.0L Gas Engines [EV0]= All 4.7L Gas Engines									
1	52058930AB	1				ER0, EV0			BRACKET, Engine MountRight
2	52058931AC	1				ER0, EV0			BRACKET, Engine MountLeft
3	52058936AC	1				EV0			INSULATOR, Engine MountRight
4	52058937AC	1				EV0			INSULATOR, Engine MountLeft
5	06503699	8				EV0			SCREW AND WASHER, Hex Head, M10x1.5x28
6	34202606	2							BOLT, Hex Head
7	06502697	2							NUT, Hex Flange Lock, M12x1.75
8	06503119	4							SCREW AND WASHER, Hex Head, M10x1.5x40
9	06506000AA	4							SCREW AND WASHER

GRAND CHEROKEE (WJ)

SERIES	LINE	BODY	ENGINE	TRANSMISSION
H = Laredo M = Sport P = Limited S = Overland	T = JEEP - 2WD J = JEEP - 4WD U = JEEP - 4WD (RHD)	74 = SPORT UTILITY 4-DR	ERH = Engine - 4.0L Power Tech I-6 EVA = Engine- 4.7L V8 MPI EVC = Engine - 4.7L HO V8 MPI ER0 = All 4.0L 6 Cyl. Gas EV0 = All 4.7L Gas	DGK = 4 Speed Auto, 42RE DGQ = 5 Speed Auto, 45RFE DG0 = All Automatic Transmissions

Engine Mounting, Rear, 4.7 [EVA,EVC]
Figure 9-140

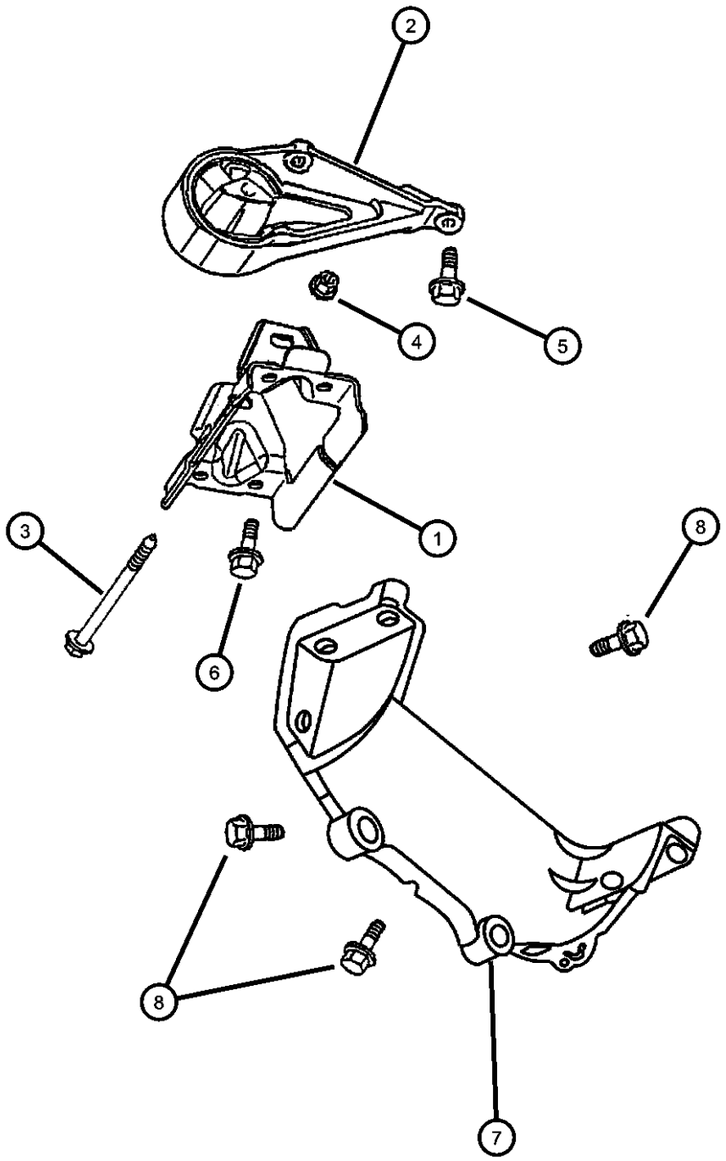

ITEM	PART NUMBER	QTY	LINE	SERIES	BODY	ENGINE	TRANS	TRIM	DESCRIPTION
Note; Sales Codes [DG0]= All Automatic Transmissions [ER0]= All 4.0L Gas Engines [EV0]= All 4.7L Gas Engines									
1									BRACKET, Insulator
	52058988	1	J			EV0	DG0		
	52058992	1	T			EV0	DG0		
2									MOUNT, Transmission
	52058996	1	J			EV0	DG0		
	52058997	1	T			EV0	DG0		
3	06504681	1				EV0			BOLT
4	06502697	1				ER0, EV0			NUT, Hex Flange Lock, M12x1.75
5	06503699	4	J			EV0	DG0		SCREW AND WASHER, Hex Head, M10x1.5x28
6	06506000AA	4							SCREW AND WASHER
7	53020885	1				EV0	DG0		COVER, Bedplate
8	06101985	8				EV0			SCREW AND WASHER, M10x1.50x45.00

GRAND CHEROKEE (WJ)

SERIES	LINE	BODY	ENGINE	TRANSMISSION
H = Laredo M = Sport P = Limited S = Overland	T = JEEP - 2WD J = JEEP - 4WD U = JEEP - 4WD (RHD)	74 = SPORT UTILITY 4-DR	ERH = Engine - 4.0L Power Tech I-6 EVA = Engine- 4.7L V8 MPI EVC = Engine - 4.7L HO V8 MPI ER0 = All 4.0L 6 Cyl. Gas EV0 = All 4.7L Gas	DGK = 4 Speed Auto, 42RE DGQ = 5 Speed Auto, 45RFE DG0 = All Automatic Transmissions

Group - 4.0L

Engine 4.0L Six Cylinder

4.0L-200 Cylinder Head 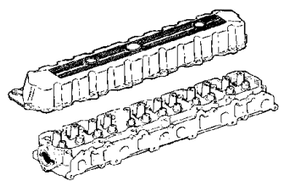	**4.0L-300** Cylinder Block 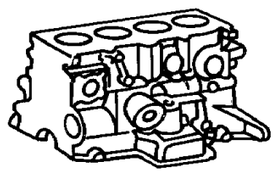	**4.0L-400** Crankshaft, Piston and Torque Converter 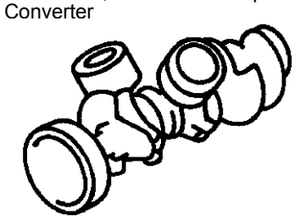	**4.0L-500** Camshafts & Valves 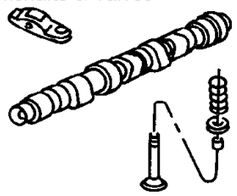
4.0L-600 Timing Belt and Cover 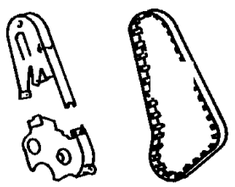	**4.0L-700** Engine Oiling 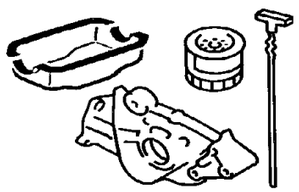	**4.0L-800** Manifolds 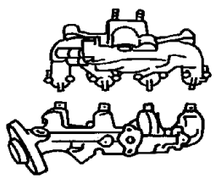	**4.0L-900** Crankcase Ventilation 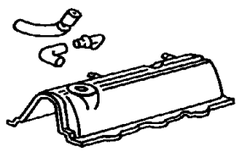

Group - 4.0L Engine 4.0L Six Cylinder

Illustration Title — Group-Fig. No.

Cylinder Head
Cylinder Head, 4.0 [ERH] ..... Fig. 4.0L - 210

Cylinder Block
Cylinder Block, 4.0 [ERH] ..... Fig. 4.0L - 310

Crankshaft, Piston and Torque Converter
Crankshaft, Piston and Torque Converter, 4.0 [ERH] ..... Fig. 4.0L - 410

Camshafts & Valves
Camshaft and Valves, 4.0 [ERH] ..... Fig. 4.0L - 510

Timing Belt and Cover
Timing Belt and Cover, 4.0 [ERH] ..... Fig. 4.0L - 610

Engine Oiling
Engine Oiling, 4.0 [ERH] ..... Fig. 4.0L - 710

Manifolds
Manifold, Intake and Exhaust, 4.0 (ERH) ..... Fig. 4.0L - 810

Crankcase Ventilation
Crankcase Ventilation, 4.0 [ERH] ..... Fig. 4.0L - 910

Cylinder Head, 4.0 [ERH]
Figure 4.0L-210

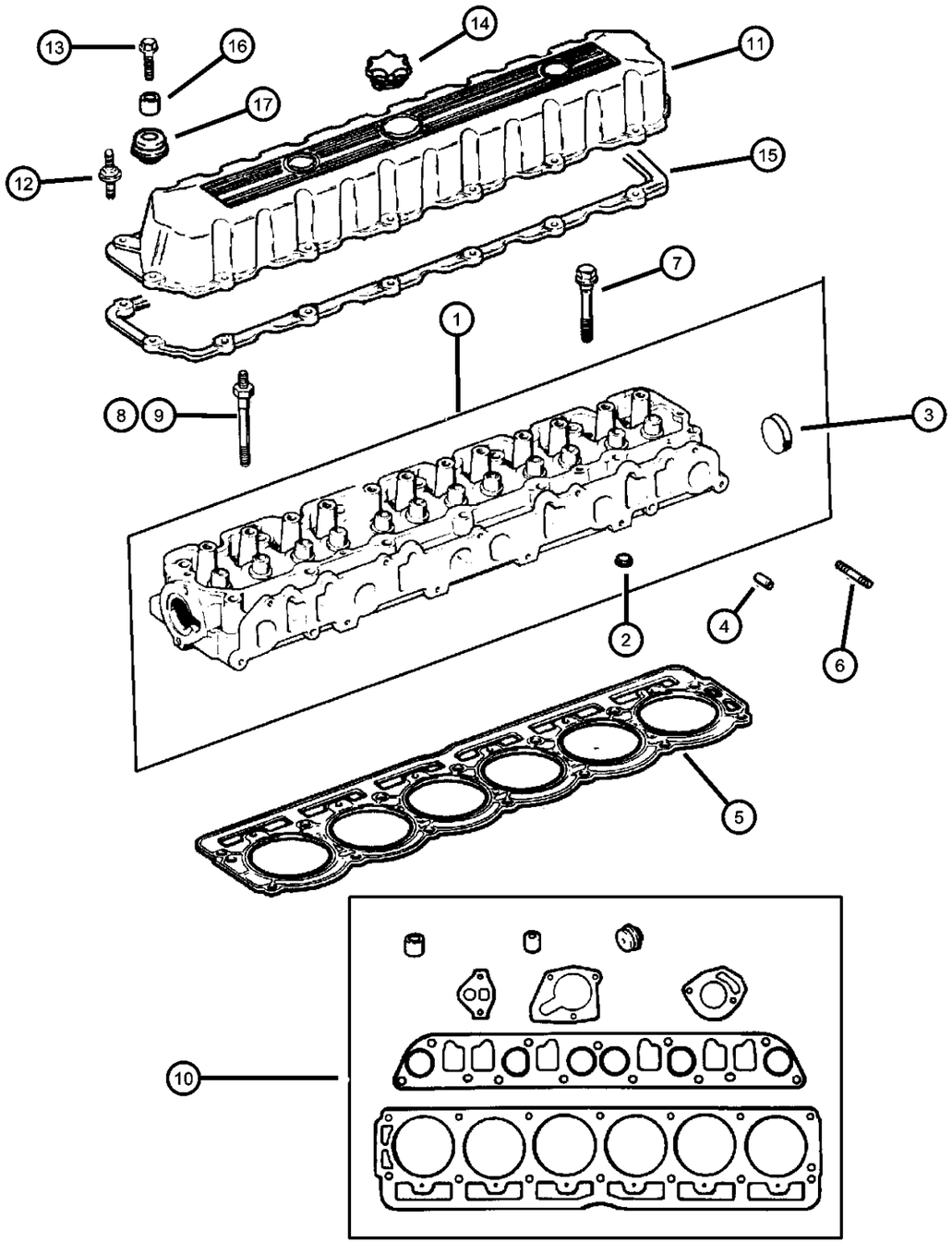

ITEM	PART NUMBER	QTY	LINE	SERIES	BODY	ENGINE	TRANS	TRIM	DESCRIPTION
Note; Sales Codes									
[ER0]= All 4.0L Gas Engines									
1	53010334	1				ER0			HEAD, Cylinder
2	J4007434	4				ER0			PLUG, Cylinder Block Oil Hole
3	J3105394	1				ER0			PLUG, Cylinder Block Oil Hole
4	J3172318	2				ER0			DOWEL, Cylinder Head To Intake
5	53020754AB	1				ER0			GASKET, Cylinder Head
6	06036193AA	2				ER0			STUD, .375-16/.375-24x1.75
7									BOLT, Cylinder Head
	06035514	5				ER0			
	06035515	2				ER0			
8	06035516	6				ER0			STUD, Double Ended, .50-13/.437-14x6.00
9	06036162AA	1				ER0			STUD, Double Ended
10	05012365AA	1				ER0			GASKET PACKAGE, Engine Upper
11	53020323	1				ER0			COVER, Cylinder Head
12	06035968AA	7				ER0			STUD, .250-20x2.00
13	06035566	8				ER0			BOLT, Hex Flange Head, .250-20x1.00
14	04648831AA	1				ER0			CAP, Oil Filler
15	53020758AC	1				ER0			GASKET, Valve Cover
16	53020598AB	15				ER0			SLEEVE, Torque Limiter
17	53010424AB	15				ER0			GROMMET, Insulator

GRAND CHEROKEE (WJ)

SERIES	LINE	BODY	ENGINE	TRANSMISSION
H = Laredo M = Sport P = Limited S = Overland	T = JEEP - 2WD J = JEEP - 4WD U = JEEP - 4WD (RHD)	74 = SPORT UTILITY 4-DR	ERH = Engine - 4.0L Power Tech I-6 EVA = Engine- 4.7L V8 MPI EVC = Engine - 4.7L HO V8 MPI ER0 = All 4.0L 6 Cyl. Gas EV0 = All 4.7L Gas	DGK = 4 Speed Auto, 42RE DGQ = 5 Speed Auto, 45RFE DG0 = All Automatic Transmissions

Cylinder Block, 4.0 [ERH]
Figure 4.0L-310

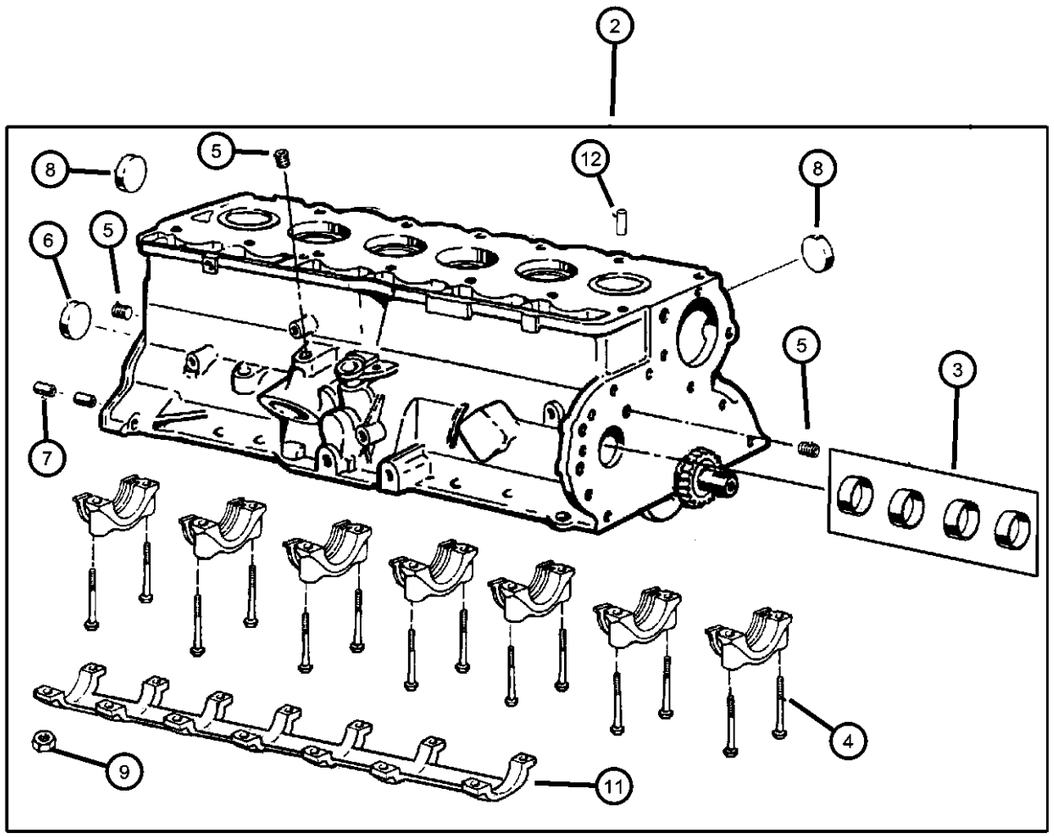

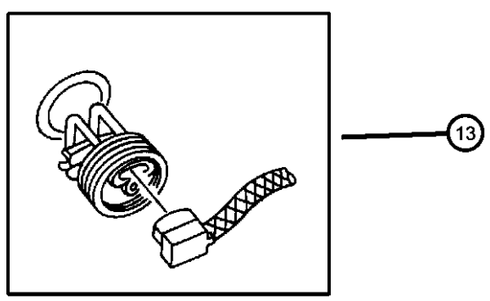

ITEM	PART NUMBER	QTY	LINE	SERIES	BODY	ENGINE	TRANS	TRIM	DESCRIPTION
Note; Sales Codes [ER0]= All 4.0L Gas Engines									
-1	05017432AA	1				ER0			GASKET PACKAGE, Engine Lower
2	05013161AC	1				ER0			BLOCK, Short, Contains: Crank, Rods, Pistons, Rings, Cam Bearings, Timing Chain, Sprockets
	R2640492AA								Mopar Reman Long Block 99-04(WJ), 00-04(TJ)
3	04636985AB	1				ER0			BEARING PACKAGE, Camshaft, Standard Size
4	06035207	14				ER0			STUD, .500-13/.375-16x3.97
5	06034166	3				ER0			PLUG, Cylinder Block Oil Hole
6	J3172313	1				ER0			PLUG, Camshaft
7	J4005148	2				ER0			DOWEL, Transmission
8	J3105394	6				ER0			PLUG, Cylinder Block Oil Hole
9	00152474	14				ER0			NUT, Hex Flange Lock, .375-16
-10	53020465	1				ER0			PLUG, Cylinder Block, Rubber Type
11	53020566	1				ER0			BRACE, Main Bearing Cap
12	00141215	2				ER0			DOWEL, .312 x .500
13	82201506	1				ER0			HEATER PACKAGE, Engine Block

GRAND CHEROKEE (WJ)

SERIES	LINE	BODY	ENGINE	TRANSMISSION
H = Laredo M = Sport P = Limited S = Overland	T = JEEP - 2WD J = JEEP - 4WD U = JEEP - 4WD (RHD)	74 = SPORT UTILITY 4-DR	ERH = Engine - 4.0L Power Tech I-6 EVA = Engine- 4.7L V8 MPI EVC = Engine - 4.7L HO V8 MPI ER0 = All 4.0L 6 Cyl. Gas EV0 = All 4.7L Gas	DGK = 4 Speed Auto, 42RE DGQ = 5 Speed Auto, 45RFE DG0 = All Automatic Transmissions

AR = use ase required - = Non illustrrated part

Crankshaft, Piston and Torque Converter, 4.0 [ERH]
Figure 4.0L-410

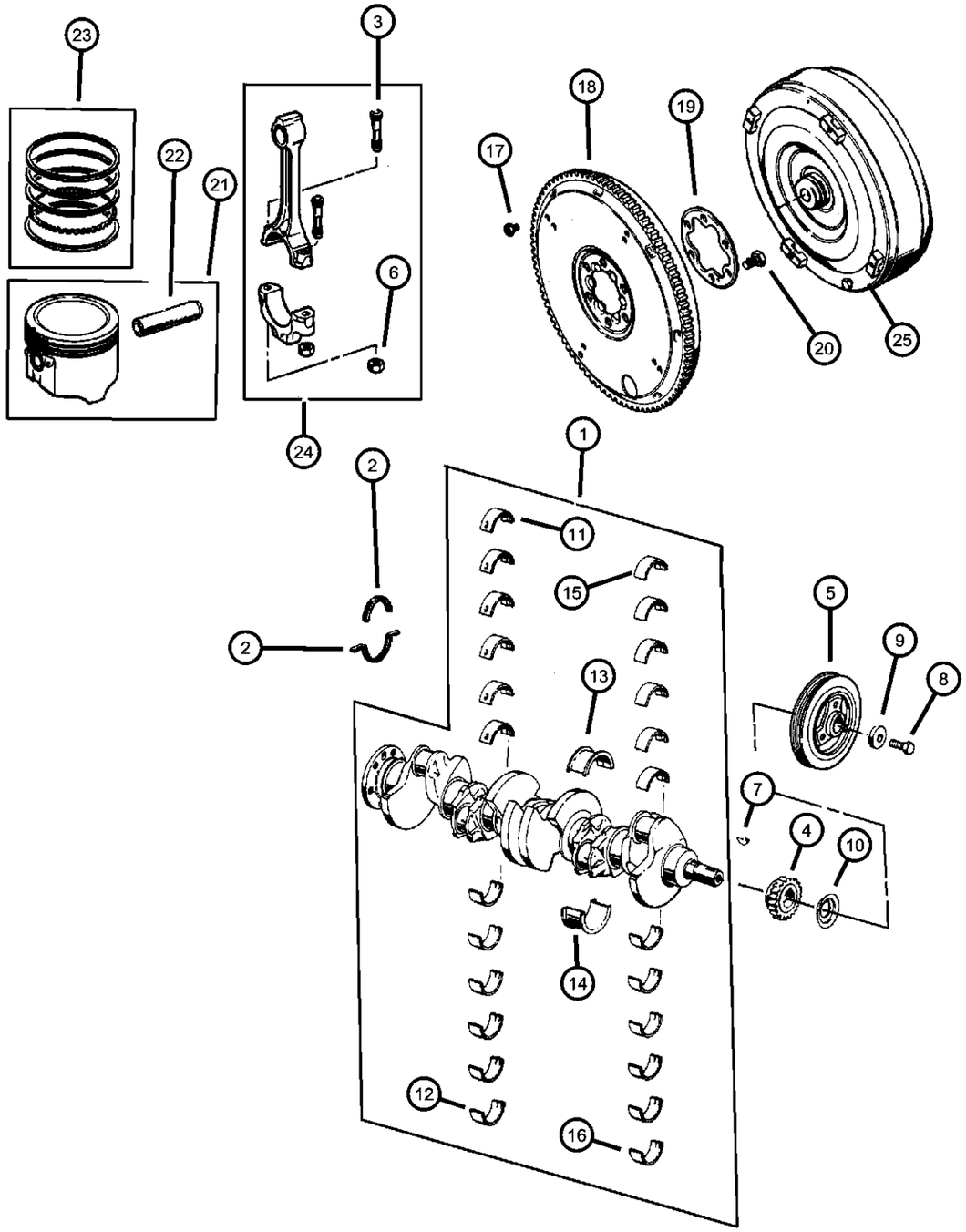

ITEM	PART NUMBER	QTY	LINE	SERIES	BODY	ENGINE	TRANS	TRIM	DESCRIPTION
Note; Sales Codes [DG0]= All Automatic Transmissions [ER0]= All 4.0L Gas Engines									
1	04864726AB	1				ER0	DG0		CRANKSHAFT
2	05018594AA	1				ER0			SEAL PACKAGE, Crankshaft
3	53020123	12				ER0			BOLT, Connecting Rod
4	53020443	1				ER0			GEAR, Crankshaft
5	33002920AB	1				ER0			DAMPER, Crankshaft
6	J4006385	12				ER0			NUT, Hex Flange, .3437-24
7	06034749	1				ER0			KEY, Crankshaft Sprocket
8	00182776	1				ER0			BOLT
9	J3230155	1				ER0			WASHER, Plain
10	J3230155	1							SLINGER, Oil, (NOT REQUIRED)
11	83507079	6				ER0			BEARING PACKAGE, Crankshaft, Standard
12	83507080	AR				ER0			BEARING PACKAGE, Crankshaft, .001 Undersize
13	83507084	AR				ER0			BEARING PACKAGE, Crankshaft Thrust, Standard Size
14	83507086	AR				ER0			BEARING PACKAGE, Crankshaft Thrust, .001" Undersize
15	83500300AB	6				ER0			BEARING KIT, Connecting Rod, Standard
16	83501397AB	AR				ER0			BEARING KIT, Connecting Rod, .001 Undersize
17	01949765	4					DG0		SCREW, Hex Head Header Point, .312-24x.44
18	52104410AA	1				ER0	DG0		PLATE, Drive Plate
19	J3214094	1				ER0	DG0		PLATE, Drive Plate Backing
20	J3151407	6				ER0	DG0		BOLT, Hex Head, .50-20x.56
21									PISTON PIN AND ROD
	04798329AC	6				ER0			B Size, 3.872
	04798330AC	6				ER0			C Size, 3.8746
	04798331AC	6				ER0			D Size, 3.8750
	04798332AC	6				ER0			E Size, 3.8754
	04798333AC	6				ER0			F Size, 3.8758
22	04798333AC	6							PIN, Piston, Serviced in Piston, (NOT SERVICED),

GRAND CHEROKEE (WJ)

SERIES	LINE	BODY	ENGINE	TRANSMISSION
H = Laredo M = Sport P = Limited S = Overland	T = JEEP - 2WD J = JEEP - 4WD U = JEEP - 4WD (RHD)	74 = SPORT UTILITY 4-DR	ERH = Engine - 4.0L Power Tech I-6 EVA = Engine- 4.7L V8 MPI EVC = Engine - 4.7L HO V8 MPI ER0 = All 4.0L 6 Cyl. Gas EV0 = All 4.7L Gas	DGK = 4 Speed Auto, 42RE DGQ = 5 Speed Auto, 45RFE DG0 = All Automatic Transmissions

AR = use ase required - = Non illustrrated part

Crankshaft, Piston and Torque Converter, 4.0 [ERH]
Figure 4.0L-410

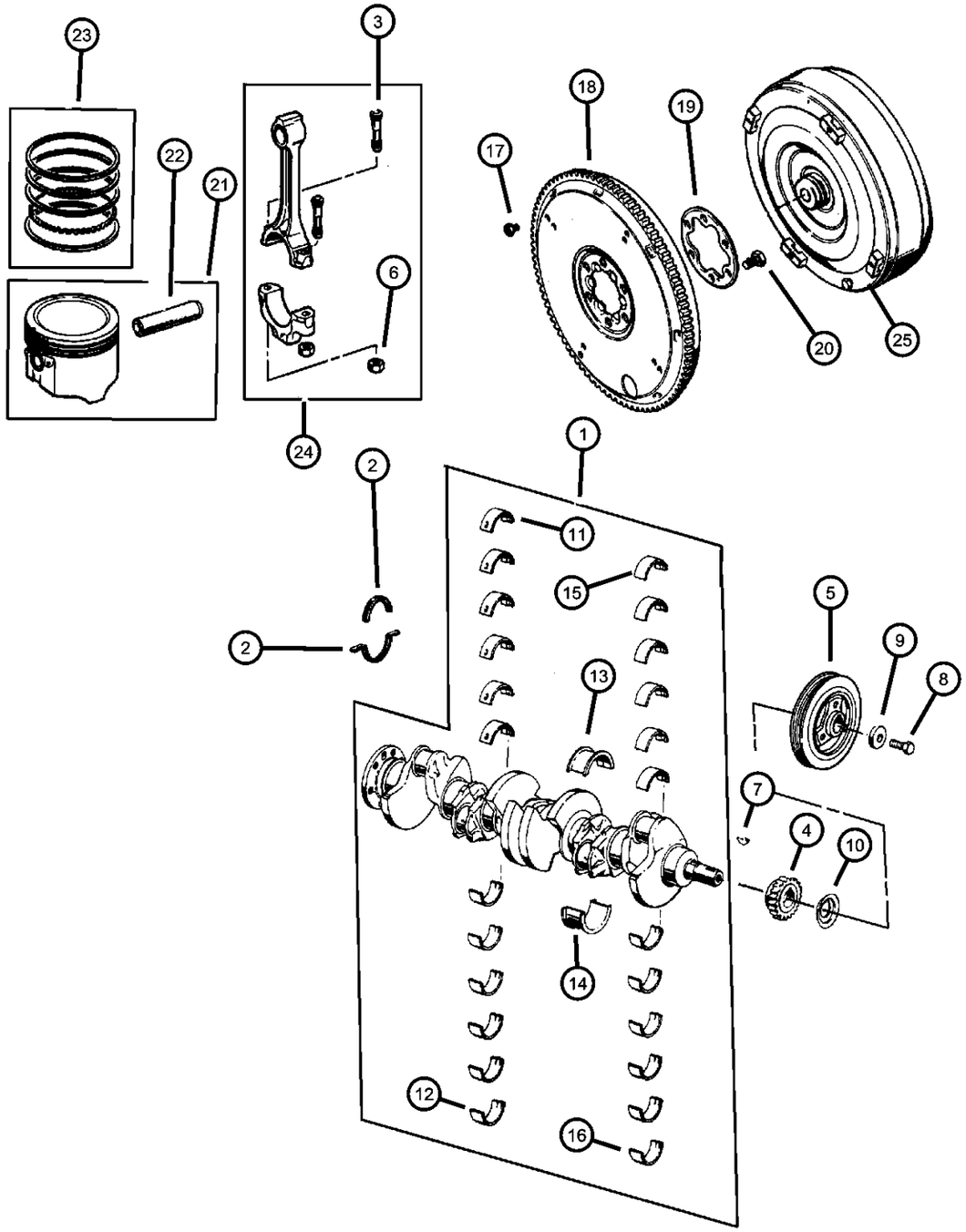

ITEM	PART NUMBER	QTY	LINE	SERIES	BODY	ENGINE	TRANS	TRIM	DESCRIPTION
23	04798878	1				ER0			RING PACKAGE, Piston, Standard Size Complete Engine
24	04798878	1							ROD, Connecting, Serviced in Piston, (NOT SERVICED)
25	04736596AB	1				ER0	DG0		CONVERTER PACKAGE, Torque

GRAND CHEROKEE (WJ)

SERIES	LINE	BODY	ENGINE	TRANSMISSION
H = Laredo M = Sport P = Limited S = Overland	T = JEEP - 2WD J = JEEP - 4WD U = JEEP - 4WD (RHD)	74 = SPORT UTILITY 4-DR	ERH = Engine - 4.0L Power Tech I-6 EVA = Engine- 4.7L V8 MPI EVC = Engine - 4.7L HO V8 MPI ER0 = All 4.0L 6 Cyl. Gas EV0 = All 4.7L Gas	DGK = 4 Speed Auto, 42RE DGQ = 5 Speed Auto, 45RFE DG0 = All Automatic Transmissions

Camshaft and Valves, 4.0 [ERH]
Figure 4.0L-510

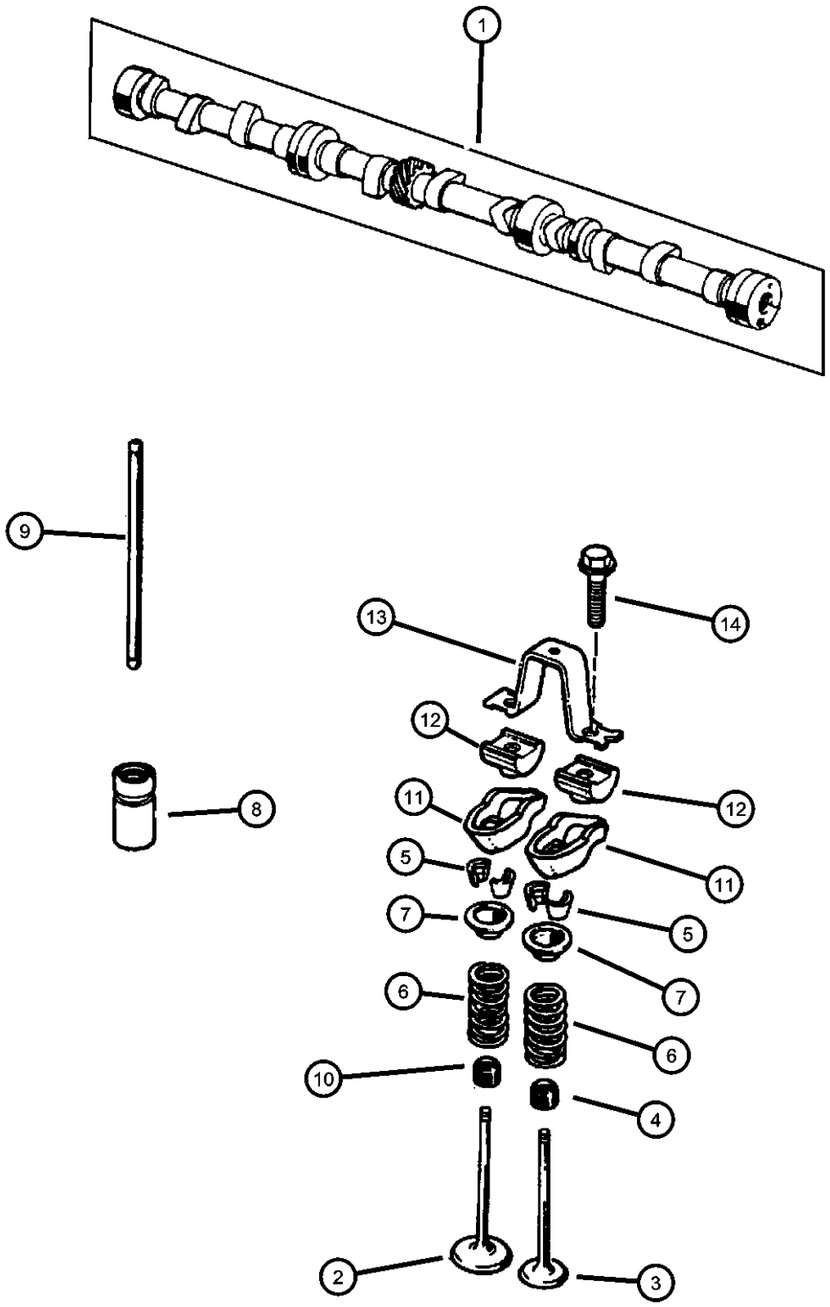

ITEM	PART NUMBER	QTY	LINE	SERIES	BODY	ENGINE	TRANS	TRIM	DESCRIPTION
Note; Sales Codes [ER0]= All 4.0L Gas Engines									
1	53010448AA	1				ER0			CAMSHAFT
2	53010512AA	6				ER0			VALVE, Intake, Standard
3	53010513AA	6				ER0			VALVE, Exhaust, Standard
4	53009887	6				ER0			SEAL, Valve GuideExhaust
5	53010515AA	24				ER0			LOCK, Valve Spring Retainer
6	53010388	12				ER0			SPRING, Valve
7	53010514AA	12				ER0			RETAINER, Valve Spring
8	04740269	12				ER0			TAPPET, Valve
9	33002986	12				ER0			PUSH ROD, Valve
10	53009886	6				ER0			SEAL, Valve GuideIntake
11	J3242393	12				ER0			ROCKER ARM, Valve
12	J3235090	12				ER0			PIVOT, Rocker Arm
13	J3236513	6				ER0			BRIDGE, Rocker Arm
14	J9425708	12				ER0			BOLT, Hex Flange Head, .312-18x1.25

GRAND CHEROKEE (WJ)

SERIES	LINE	BODY	ENGINE	TRANSMISSION
H = Laredo M = Sport P = Limited S = Overland	T = JEEP - 2WD J = JEEP - 4WD U = JEEP - 4WD (RHD)	74 = SPORT UTILITY 4-DR	ERH = Engine - 4.0L Power Tech I-6 EVA = Engine- 4.7L V8 MPI EVC = Engine - 4.7L HO V8 MPI ER0 = All 4.0L 6 Cyl. Gas EV0 = All 4.7L Gas	DGK = 4 Speed Auto, 42RE DGQ = 5 Speed Auto, 45RFE DG0 = All Automatic Transmissions

Timing Belt and Cover, 4.0 [ERH]
Figure 4.0L-610

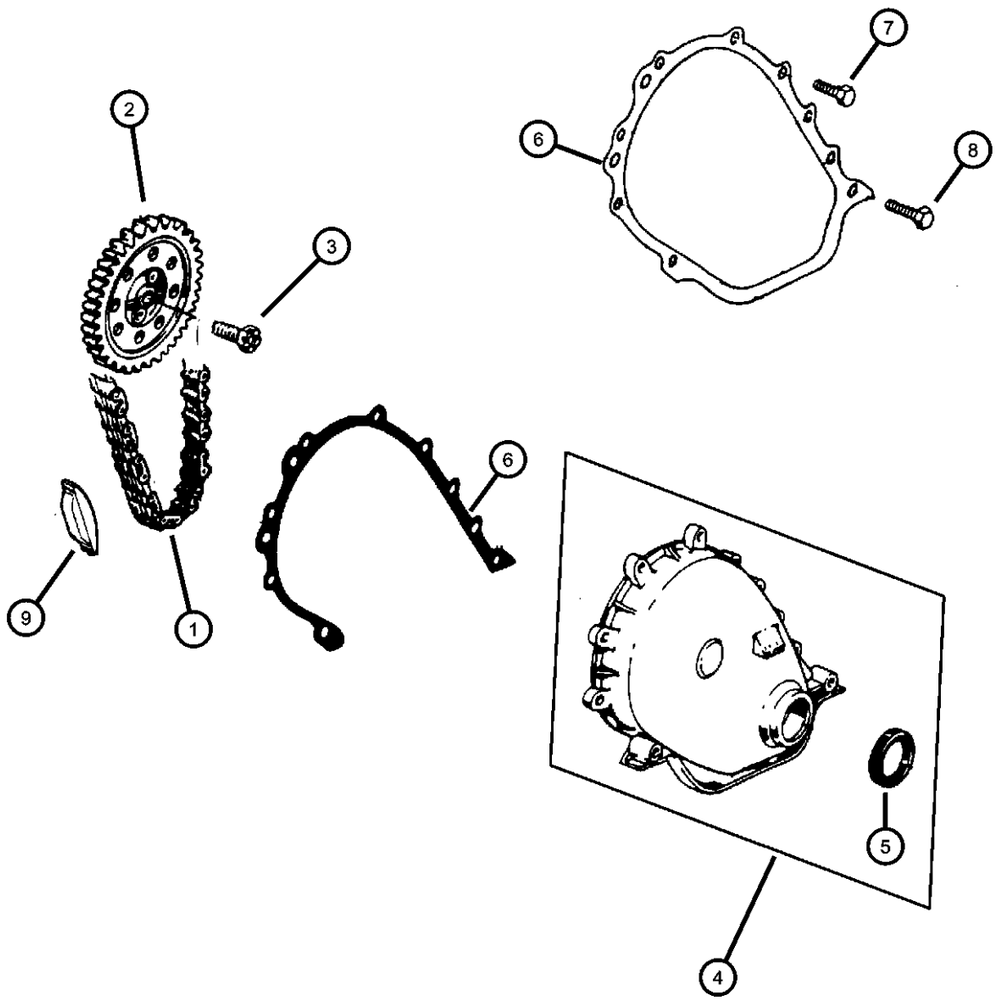

ITEM	PART NUMBER	QTY	LINE	SERIES	BODY	ENGINE	TRANS	TRIM	DESCRIPTION
Note; Sales Codes									
[ER0]= All 4.0L Gas Engines									
-1	05189875AA	1				ER0			CHAIN PACKAGE, Timing
2	53020444	1				ER0			CHAIN, Timing
3	53010557AA	1				ER0			SPROCKET, Camshaft
4	06024030	1				ER0			SCREW AND WASHER, Hex
5	53010421	1				ER0			COVER, Timing Belt
6	33004681	1				ER0			SEAL, Front Main Crankshaft
7	53020487	1				ER0			GASKET, Front Cover
8	06035893	5				ER0			BOLT, Hex
9									SCREW
	06035894	2				ER0			.312-18x1.56
	06035895	2				ER0			.250-20x1.240
10	33003446	1				ER0			SNUBBER, Timing Chain
-11	53010401	1				ER0			PLATE, Camshaft Thrust
-12	06035975AA	2				ER0			SCREW, Pan Head

GRAND CHEROKEE (WJ)

SERIES	LINE	BODY	ENGINE	TRANSMISSION
H = Laredo	T = JEEP - 2WD	74 = SPORT UTILITY 4-DR	ERH = Engine - 4.0L Power Tech I-6	DGK = 4 Speed Auto, 42RE
M = Sport	J = JEEP - 4WD		EVA = Engine- 4.7L V8 MPI	DGQ = 5 Speed Auto, 45RFE
P = Limited	U = JEEP - 4WD (RHD)		EVC = Engine - 4.7L HO V8 MPI	DG0 = All Automatic Transmissions
S = Overland			ER0 = All 4.0L 6 Cyl. Gas	
			EV0 = All 4.7L Gas	

Engine Oiling, 4.0 [ERH]
Figure 4.0L-710

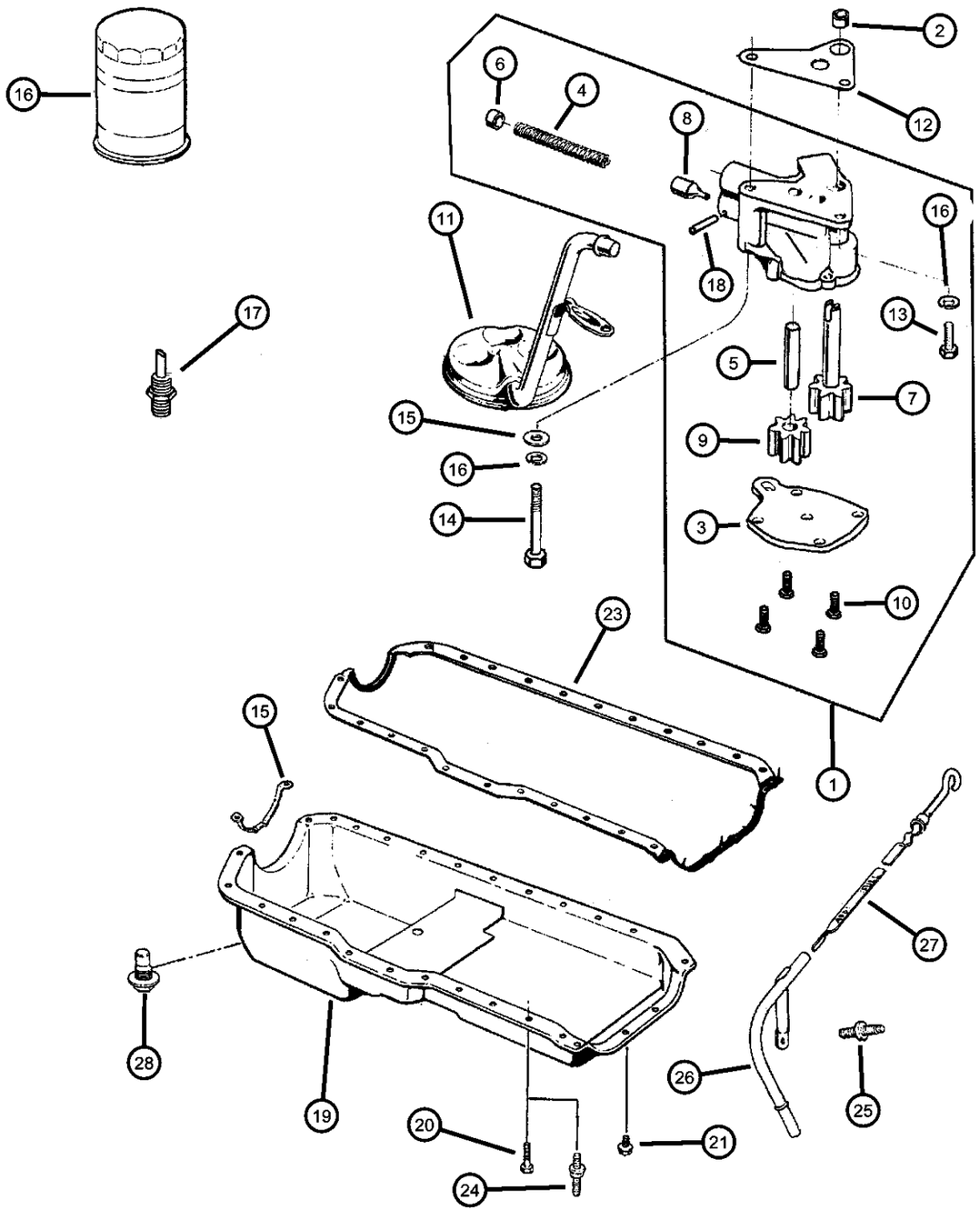

ITEM	PART NUMBER	QTY	LINE	SERIES	BODY	ENGINE	TRANS	TRIM	DESCRIPTION
Note; Sales Codes [ER0]= All 4.0L Gas Engines									
1	J3241399	1				ER0			PUMP, Engine Oil
2	J4005149	1				ER0			DOWEL, Oil Pump
3	J3241733	1				ER0			COVER, Engine Oil Pump
4	J3239668	1				ER0			SPRING, Oil Pressure Relief Valve
5	J3171956	1				ER0			SHAFT, Oil Pump
6	J3171958	1				ER0			RETAINER, Oil Release Valve
7	J3172334	1				ER0			GEAR, Oil Pump
8	J3188661	1				ER0			PLUNGER, Oil Pressure Relief Valve
9	J3196843	1				ER0			GEAR, Oil Pump Driven
10	J9416852	4				ER0			SCREW, Hex Flange Head, .25-20x.50
11	33002696	1				ER0			TUBE, Oil Pump Inlet
12	J3172332	1				ER0			GASKET, Oil Pump
13	06022235	1				ER0			BOLT AND WASHER, Hex Head, .312-18x1.00
14	00154593	1				ER0			SCREW, Hex Head Coned, .312-18x2.625
15	53010511AA	1				ER0			SUPPORT, Engine Oil Pan
16	05281090	1				ER0			FILTER, Engine Oil
	0FE00292								Canadian Aftermarket Part
	05281090BA								BULK PACK (12)
	77060018								Performance Mobil 1, 15W - 50 Tri-Synthetic Engine Oil- Recommended Fill for 6.1L & 8.3L
	P5007323								Performance Mobil 1, 5W - 30 Tri-Synthetic Engine Oil, Quart
17	53007563	1				ER0			CONNECTOR, Oil Filter
18	J0271448	1				ER0			PIN, Roll, 5/32" x 1.00"
19	53010340	1				ER0			PAN, Engine Oil
20	06034732	14				ER0			SCREW AND WASHER, Hex Head, .25-20x.545
21	06034483	3				ER0			SCREW, Hex Head Coned, .312-18x.875
-22	06034733	1				ER0			STUD, .312-18/.250-20x1.680
23	53007568AC	1				ER0			GASKET, Oil Pan

GRAND CHEROKEE (WJ)

SERIES	LINE	BODY	ENGINE	TRANSMISSION
H = Laredo M = Sport P = Limited S = Overland	T = JEEP - 2WD J = JEEP - 4WD U = JEEP - 4WD (RHD)	74 = SPORT UTILITY 4-DR	ERH = Engine - 4.0L Power Tech I-6 EVA = Engine- 4.7L V8 MPI EVC = Engine - 4.7L HO V8 MPI ER0 = All 4.0L 6 Cyl. Gas EV0 = All 4.7L Gas	DGK = 4 Speed Auto, 42RE DGQ = 5 Speed Auto, 45RFE DG0 = All Automatic Transmissions

Engine Oiling, 4.0 [ERH]
Figure 4.0L-710

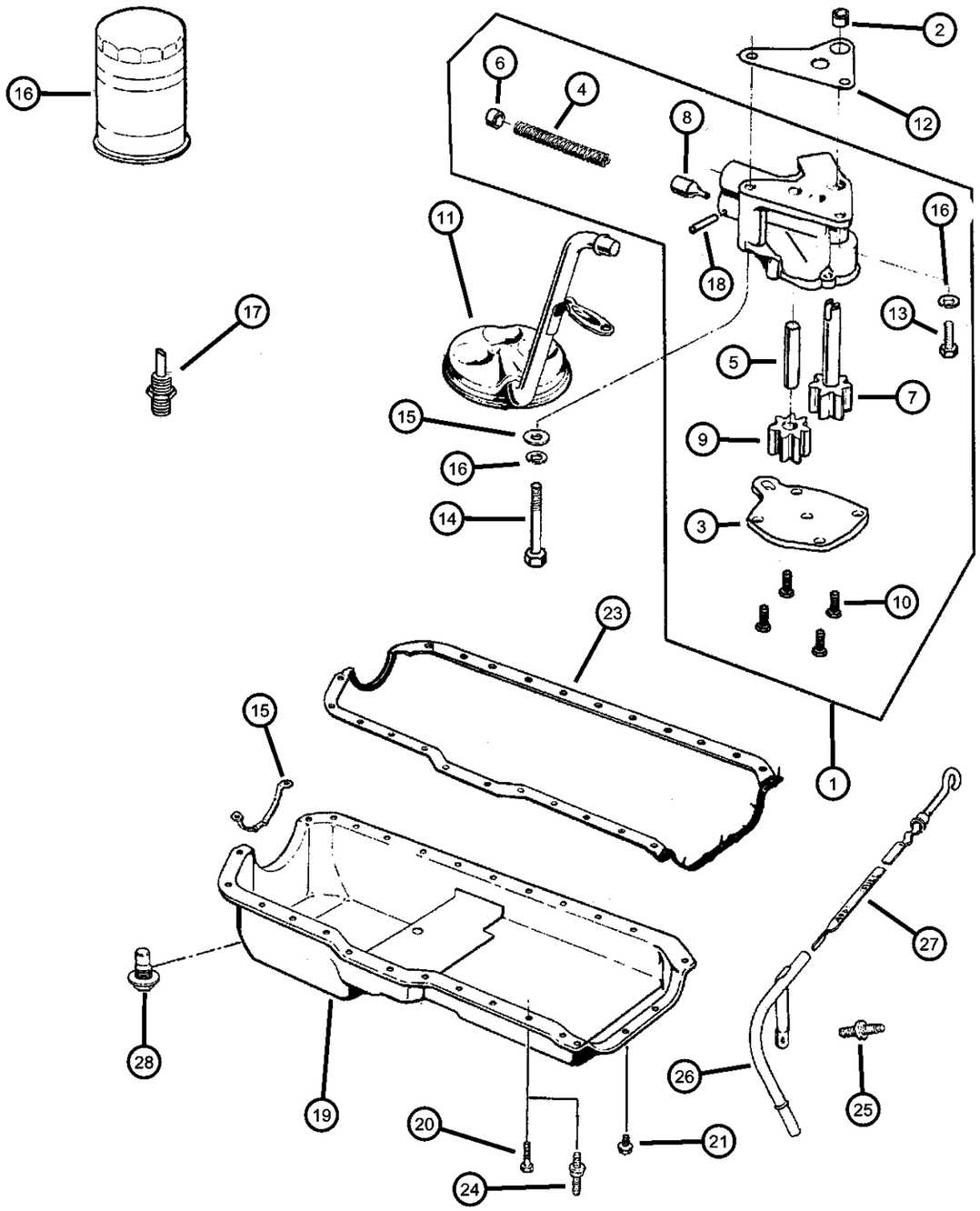

ITEM	PART NUMBER	QTY	LINE	SERIES	BODY	ENGINE	TRANS	TRIM	DESCRIPTION
24	06034734	10				ER0			BOLT, Double Stud Hex, .250-20x1.437 & .250-20 x.700
25	06035664	1				ER0			STUD, .312-18x1.560
26	53020782	1				ER0			TUBE, Oil Filler
27	53010445	1				ER0			INDICATOR, Engine Oil Level
28	06035417	1				ER0			PLUG, Oil Drain
-29	53010615AA	1				ER0			DRIVE, OIL PUMP

GRAND CHEROKEE (WJ)

SERIES	LINE	BODY	ENGINE	TRANSMISSION
H = Laredo M = Sport P = Limited S = Overland	T = JEEP - 2WD J = JEEP - 4WD U = JEEP - 4WD (RHD)	74 = SPORT UTILITY 4-DR	ERH = Engine - 4.0L Power Tech I-6 EVA = Engine- 4.7L V8 MPI EVC = Engine - 4.7L HO V8 MPI ER0 = All 4.0L 6 Cyl. Gas EV0 = All 4.7L Gas	DGK = 4 Speed Auto, 42RE DGQ = 5 Speed Auto, 45RFE DG0 = All Automatic Transmissions

Manifold, Intake and Exhaust, 4.0 (ERH)
Figure 4.0L-810

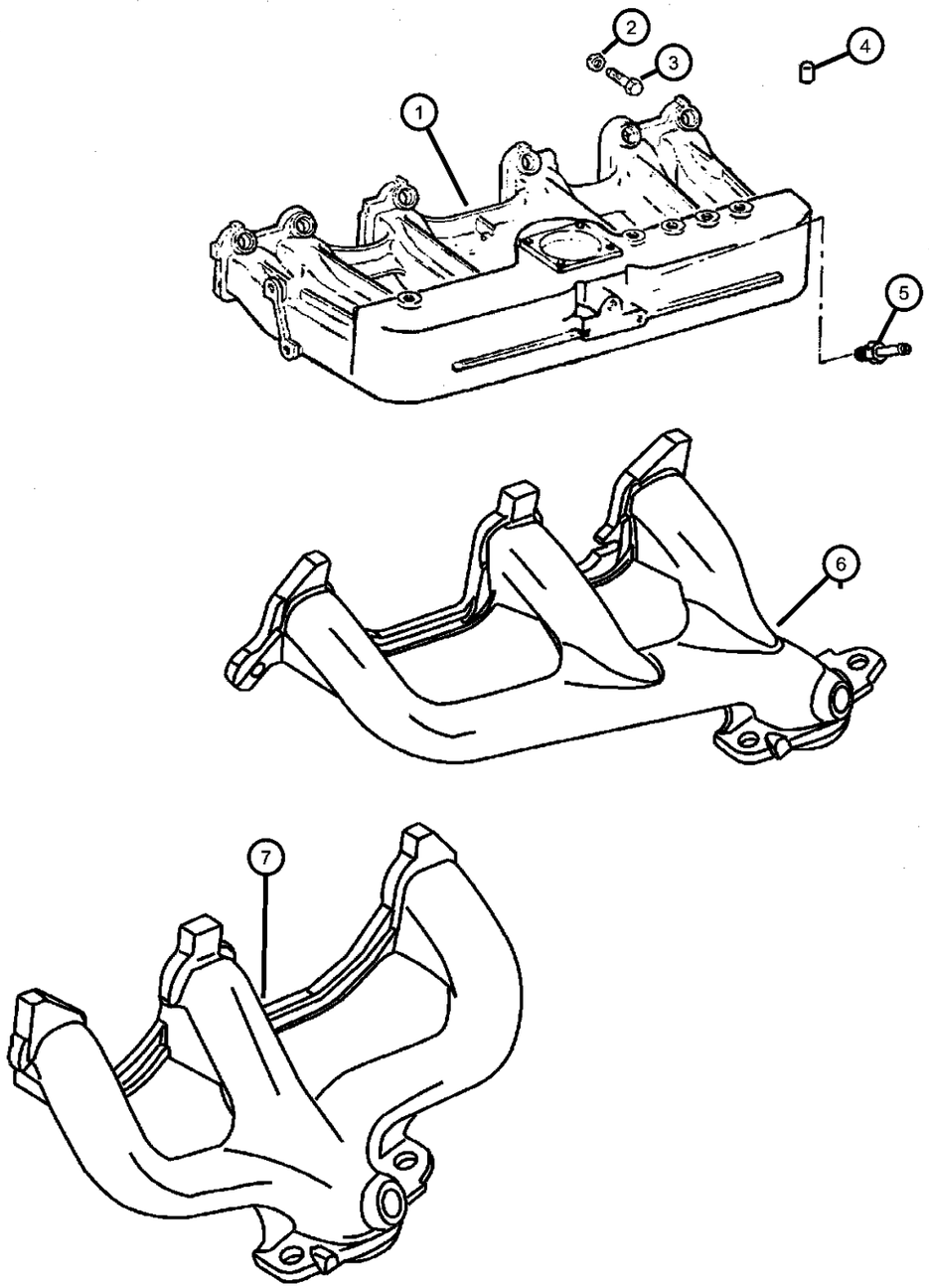

ITEM	PART NUMBER	QTY	LINE	SERIES	BODY	ENGINE	TRANS	TRIM	DESCRIPTION
NOTE: ER0=All 4.0L Engines									
1	04854197AA	1				ER0			MANIFOLD, Intake
2	06036171AA	2				ER0			NUT AND WASHER
3	06036045AA	8				ER0			BOLT AND RETAINER, Hex Head
4	03580172	1							CAP, Vacuum
5	04854194	1				ER0			FITTING, Vacuum
6	53010196	1				ER0			MANIFOLD, Exhaust, Exhaust Front Machining
7	53010199	1				ER0			MANIFOLD, Exhaust, Exhaust Rear Machining
-8	04854038	1				ER0			GASKET, Intake/Exhaust Manifold
-9	06036193AA	2				ER0			STUD, .375-16/.375-24x1.75
-10	06506546AA	2				ER0			NUT, Exhaust Manifold

GRAND CHEROKEE (WJ)

SERIES	LINE	BODY	ENGINE	TRANSMISSION
H = Laredo	T = JEEP - 2WD	74 = SPORT UTILITY 4-DR	ERH = Engine - 4.0L Power Tech I-6	DGK = 4 Speed Auto, 42RE
M = Sport	J = JEEP - 4WD		EVA = Engine- 4.7L V8 MPI	DGQ = 5 Speed Auto, 45RFE
P = Limited	U = JEEP - 4WD (RHD)		EVC = Engine - 4.7L HO V8 MPI	DG0 = All Automatic Transmissions
S = Overland			ER0 = All 4.0L 6 Cyl. Gas	
			EV0 = All 4.7L Gas	

Crankcase Ventilation, 4.0 [ERH]
Figure 4.0L-910

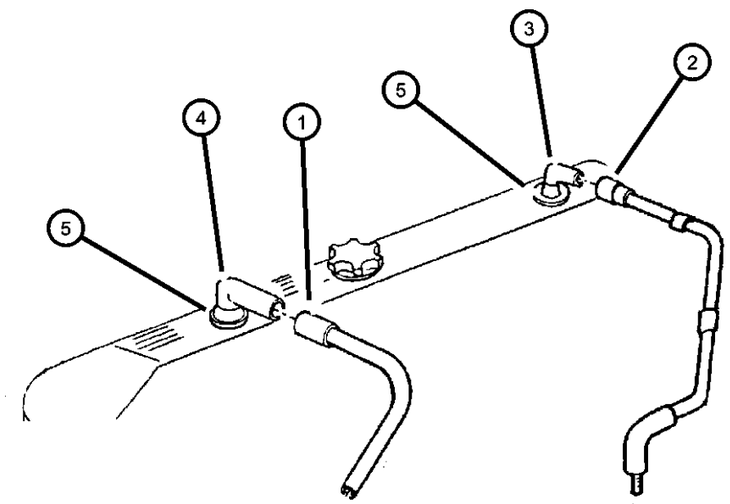

ITEM	PART NUMBER	QTY	LINE	SERIES	BODY	ENGINE	TRANS	TRIM	DESCRIPTION
Note; Sales Codes									
[ER0]= All 4.0L Gas Engines									
1	04854119	1				ER0			TUBE, Crankcase Vent To Air Cleaner
2	04854265	1				ER0			TUBE, Crankcase Vent To Intake Manifold
3	53013360AA	1				ER0			TUBE, Crankcase Vent To Air Cleaner
4	53030497	1				ER0			FITTING, Crankcase Vent Tube
5	02946079	2				ER0			GROMMET, Crankcase Vent

GRAND CHEROKEE (WJ)

SERIES	LINE	BODY	ENGINE	TRANSMISSION
H = Laredo	T = JEEP - 2WD	74 = SPORT UTILITY 4-DR	ERH = Engine - 4.0L Power Tech I-6	DGK = 4 Speed Auto, 42RE
M = Sport	J = JEEP - 4WD		EVA = Engine- 4.7L V8 MPI	DGQ = 5 Speed Auto, 45RFE
P = Limited	U = JEEP - 4WD (RHD)		EVC = Engine - 4.7L HO V8 MPI	DG0 = All Automatic Transmissions
S = Overland			ER0 = All 4.0L 6 Cyl. Gas	
			EV0 = All 4.7L Gas	

Group - 4.7L

Engine 4.7L Eight Cylinder

4.7L-200
Cylinder Head

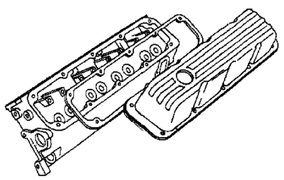

4.7L-300
Cylinder Block

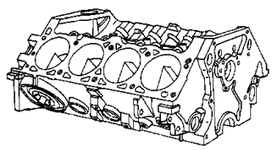

4.7L-400
Crankshaft, Pistons and Torque Converter

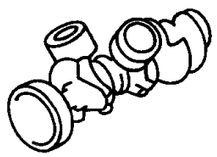

4.7L-500
Camshafts and Valves

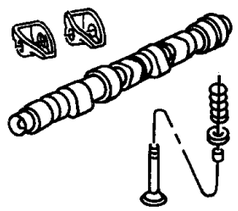

4.7L-600
Timing Belt and Cover

4.7L-700
Engine Oiling

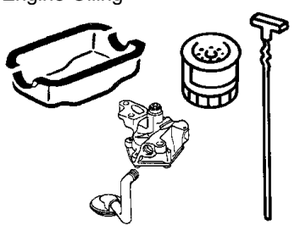

4.7L-800
Manifolds

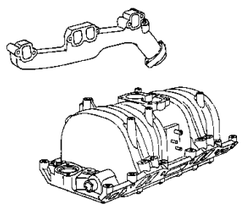

4.7L-900
Crankcase Ventilation

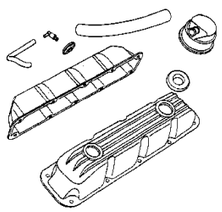

Group - 4.7L Engine 4.7L Eight Cylinder

Illustration Title — Group-Fig. No.

Cylinder Head
Cylinder Head, 4.7 [EVA, EVC] ..... Fig. 4.7L - 210

Cylinder Block
Cylinder Block, 4.7 [EVA, EVC] ..... Fig. 4.7L - 310

Crankshaft, Pistons and Torque Converter
Crankshaft, Piston and Torque Converter, 4.7 [EVA, EVC] ..... Fig. 4.7L - 410

Camshafts and Valves
Camshaft and Valves, 4.7 [EVA, EVC] ..... Fig. 4.7L - 510

Timing Belt and Cover
Timing Cover, 4.7 [EVA, EVC] ..... Fig. 4.7L - 610
Timing Chain and Guides, 4.7 [EVA, EVC] ..... Fig. 4.7L - 620

Engine Oiling
Engine Oiling, 4.7 [EVA, EVC] ..... Fig. 4.7L - 710

Manifolds
Manifold, Intake and Exhaust, 4.7 [EVA, EVC] ..... Fig. 4.7L - 810

Crankcase Ventilation
Crankcase Ventilation, 4.7 [EVA, EVC] ..... Fig. 4.7L - 910

Cylinder Head, 4.7 [EVA, EVC]
Figure 4.7L-210

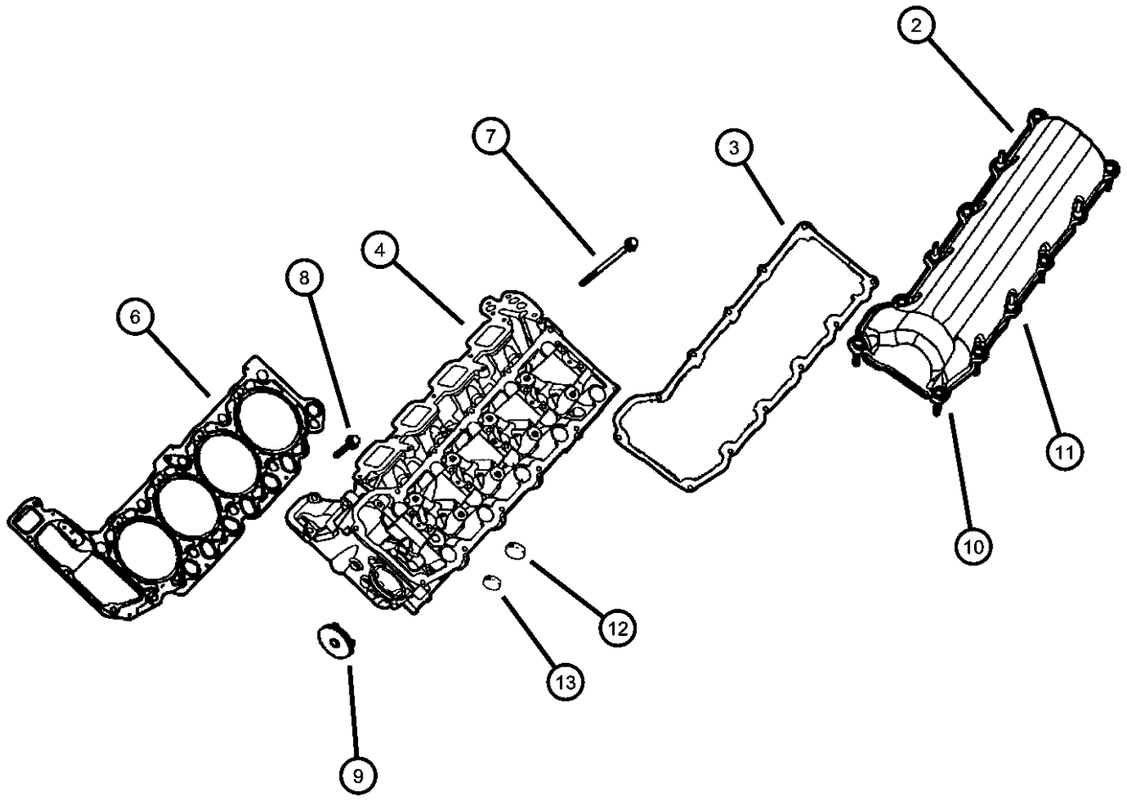

ITEM	PART NUMBER	QTY	LINE	SERIES	BODY	ENGINE	TRANS	TRIM	DESCRIPTION

NOTES: Upper Gasket Package Contains: Cylinder Head and Cylinder Head Cover Gaskets, Intake and Exhaust Manifold Gaskets, Throttle Body
Sales Codes
[EVA]= 4.7L Power Tech V-8
[EVC]= 4.7L Power Tech High Output V-8
[EV0]= All 4.7L Gas Engines

ITEM	PART NUMBER	QTY	ENGINE	TRANS	DESCRIPTION
-1					GASKET PACKAGE, Engine Upper, See Notes
	05135794AA	1	EVA	DG0	
		1	EVC	DG0	
2					COVER, Cylinder Head
	53020657AD	1	EV0		Left
	53020874AE	1	EV0		Right
3					GASKET, Valve Cover
	53020877	1	EV0		Left
	53020878	1	EV0		Right
4					HEAD, Cylinder, Left
	53020797AB	1	EVA		
	R5847099				Mopar Reman 4.7L Head w/Valves, Springs, Gasket (EVA) - Left
	53021453AA	1	EVC		
	R5847424				Mopar Reman 4.7L HO Head w/Valves, Springs, Gasket (EVA) - Left
-5					HEAD, Cylinder, Right
	53020798AB	1	EVA		
	R6847099				Mopar Reman 4.7L Head w/Valves, Springs, Gasket (EVA) - Right
	53021454AA	1	EVC		
	R6847424				Mopar Reman 4.7L HO Head w/Valves, Springs, Gasket (EVA) - Right
6	53020673AC	2	EV0		GASKET, Cylinder Head
7					SCREW AND WASHER, Hex Head
	06505528AA	20	EVA		
		20	EVC		
8	06506785AA	8	EV0		SCREW AND WASHER, Hex Head
9	53021031	1	EV0		PLUG, Access Hole

GRAND CHEROKEE (WJ)

SERIES	LINE	BODY	ENGINE	TRANSMISSION
H = Laredo M = Sport P = Limited S = Overland	T = JEEP - 2WD J = JEEP - 4WD U = JEEP - 4WD (RHD)	74 = SPORT UTILITY 4-DR	ERH = Engine - 4.0L Power Tech I-6 EVA = Engine- 4.7L V8 MPI EVC = Engine - 4.7L HO V8 MPI ER0 = All 4.0L 6 Cyl. Gas EV0 = All 4.7L Gas	DGK = 4 Speed Auto, 42RE DGQ = 5 Speed Auto, 45RFE DG0 = All Automatic Transmissions

Cylinder Head, 4.7 [EVA, EVC]
Figure 4.7L-210

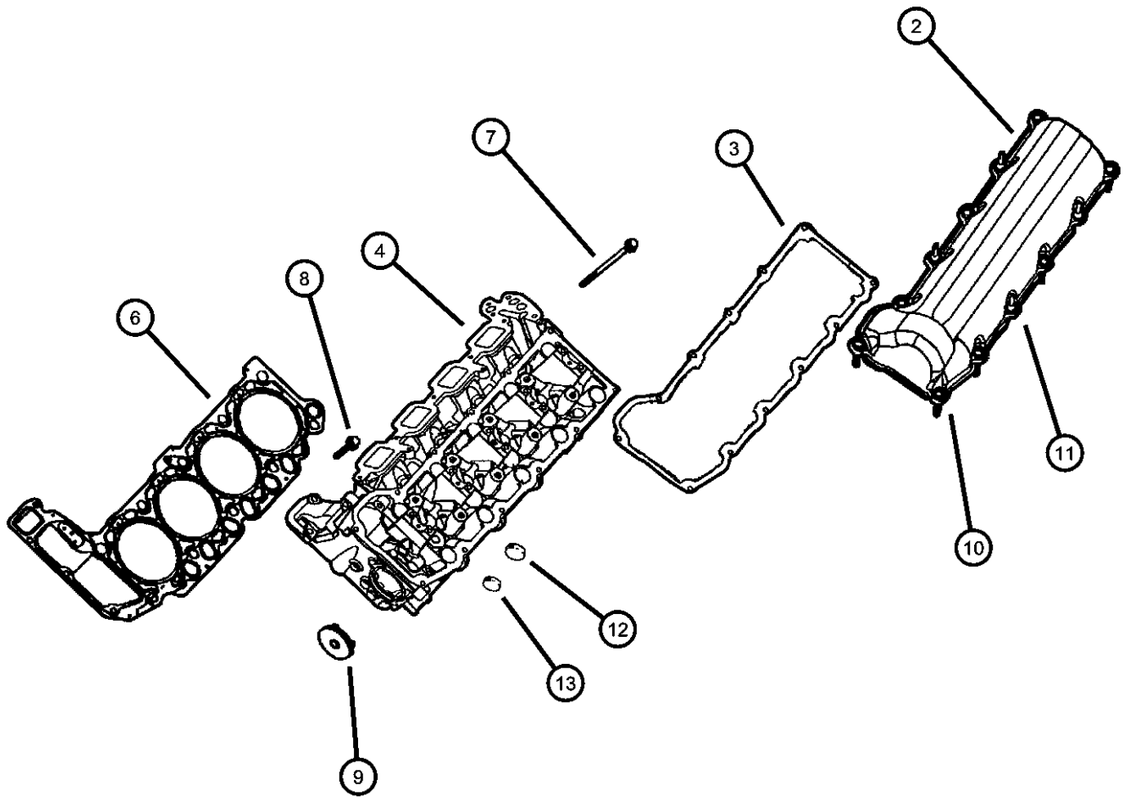

ITEM	PART NUMBER	QTY	LINE	SERIES	BODY	ENGINE	TRANS	TRIM	DESCRIPTION
10	53021031	1							SCREW, Serviced in Cylinder Head Cover, (NOT SERVICED)
11	53021031	1							STUD, Serviced in Cylinder Head Cover, (NOT SERVICED)
12									PLUG, Core, 1.25 Diameter
	04556020	2				EVC			
		2				EVA			
13									PLUG, Hex Socket, 3/8-18NPTx.475
	06034331	2				EVC			
		2				EVA			

GRAND CHEROKEE (WJ)

SERIES	LINE	BODY	ENGINE	TRANSMISSION
H = Laredo M = Sport P = Limited S = Overland	T = JEEP - 2WD J = JEEP - 4WD U = JEEP - 4WD (RHD)	74 = SPORT UTILITY 4-DR	ERH = Engine - 4.0L Power Tech I-6 EVA = Engine- 4.7L V8 MPI EVC = Engine - 4.7L HO V8 MPI ER0 = All 4.0L 6 Cyl. Gas EV0 = All 4.7L Gas	DGK = 4 Speed Auto, 42RE DGQ = 5 Speed Auto, 45RFE DG0 = All Automatic Transmissions

Cylinder Block, 4.7 [EVA, EVC]
Figure 4.7L-310

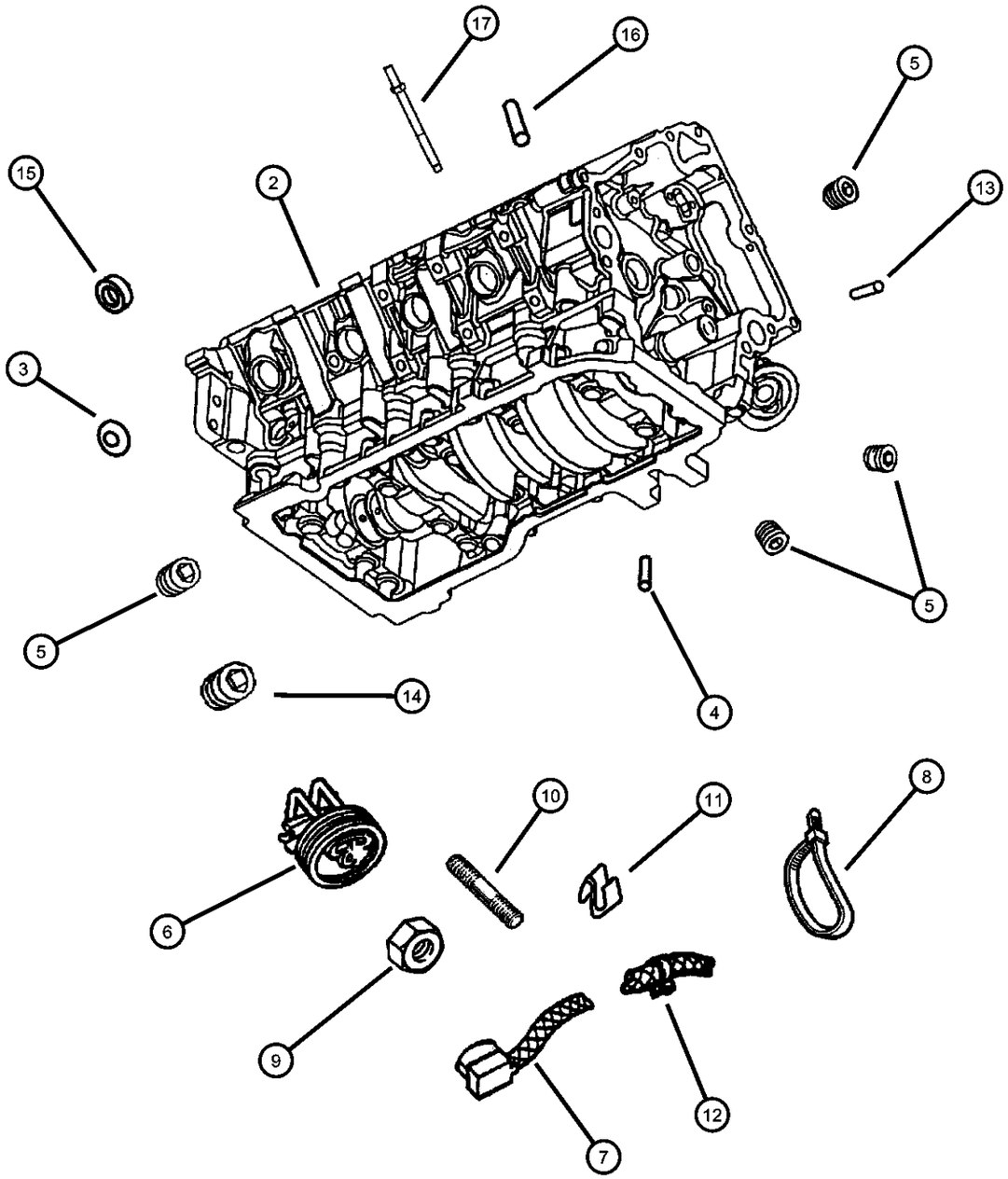

ITEM	PART NUMBER	QTY	LINE	SERIES	BODY	ENGINE	TRANS	TRIM	DESCRIPTION

NOTES: Lower Gasket Package contains: Front and Rear Crankshaft Seals, Oil Pick Up Tube Seal; Oil Pan, Chain Case and Water Pump Gaskets
Sales Codes
[EVA]= 4.7L Power Tech V-8
[EVC]= 4.7L Power Tech High Output V-8
[EV0]= All 4.7L Gas Engines

ITEM	PART NUMBER	QTY	LINE	SERIES	BODY	ENGINE	TRANS	TRIM	DESCRIPTION
-1									GASKET PACKAGE, Engine Lower, See Notes
	05135796AA	1				EVA	DG0		
		1				EVC	DG0		
2									BLOCK, Short
	05011499AD	1				EVA			Contains: Block, Bed Plate, Crank, Rods, Pistons, Rings, Oil Pump, Oil Pan
	R2847014								Mopar Reman 4.7L Long Block (EVA)
	05017444AA	1				EVC			Contains: Block, Bed Plate, Crank, Rods, Pistons, Rings, Oil Pump, Oil Pan
	R2847424								Mopar Remanufactured Long Block w/ Head(s)
3	06034804	10				EV0			PLUG, Core, 1.39 Diameter
4	06505457AA	3				EV0			PIN
5	06036114AA	4				EV0			PLUG, Pipe
6	82203640	1				EV0			HEATER PACKAGE, Engine Block
7	56027117	1				EV0			CORD, Engine Block Heater
8	56008876	1				EV0			STRAP, Tie
9	56008876	1							NUT, Hex Flange Lock, .375-16, (NOT SERVICED)
10	56008876	1							SCREW, [.375-16x.625], (NOT SERVICED)
11	56008876	1							CLIP, (NOT SERVICED)
12	56008876	1							CLIP, (NOT SERVICED)
13	53010533AA	2				EV0			DOWEL
14	06034366	2				EV0			SCREW
15	04556019	1				EV0			PLUG, Cylinder Block Oil Hole
16	05240849	4				EV0			DOWEL, Block To Clutch Housing
17	06505274AA	2				EV0			STUD

GRAND CHEROKEE (WJ)

SERIES	LINE	BODY	ENGINE	TRANSMISSION
H = Laredo M = Sport P = Limited S = Overland	T = JEEP - 2WD J = JEEP - 4WD U = JEEP - 4WD (RHD)	74 = SPORT UTILITY 4-DR	ERH = Engine - 4.0L Power Tech I-6 EVA = Engine- 4.7L V8 MPI EVC = Engine - 4.7L HO V8 MPI ER0 = All 4.0L 6 Cyl. Gas EV0 = All 4.7L Gas	DGK = 4 Speed Auto, 42RE DGQ = 5 Speed Auto, 45RFE DG0 = All Automatic Transmissions

Crankshaft, Piston and Torque Converter, 4.7 [EVA, EVC]
Figure 4.7L-410

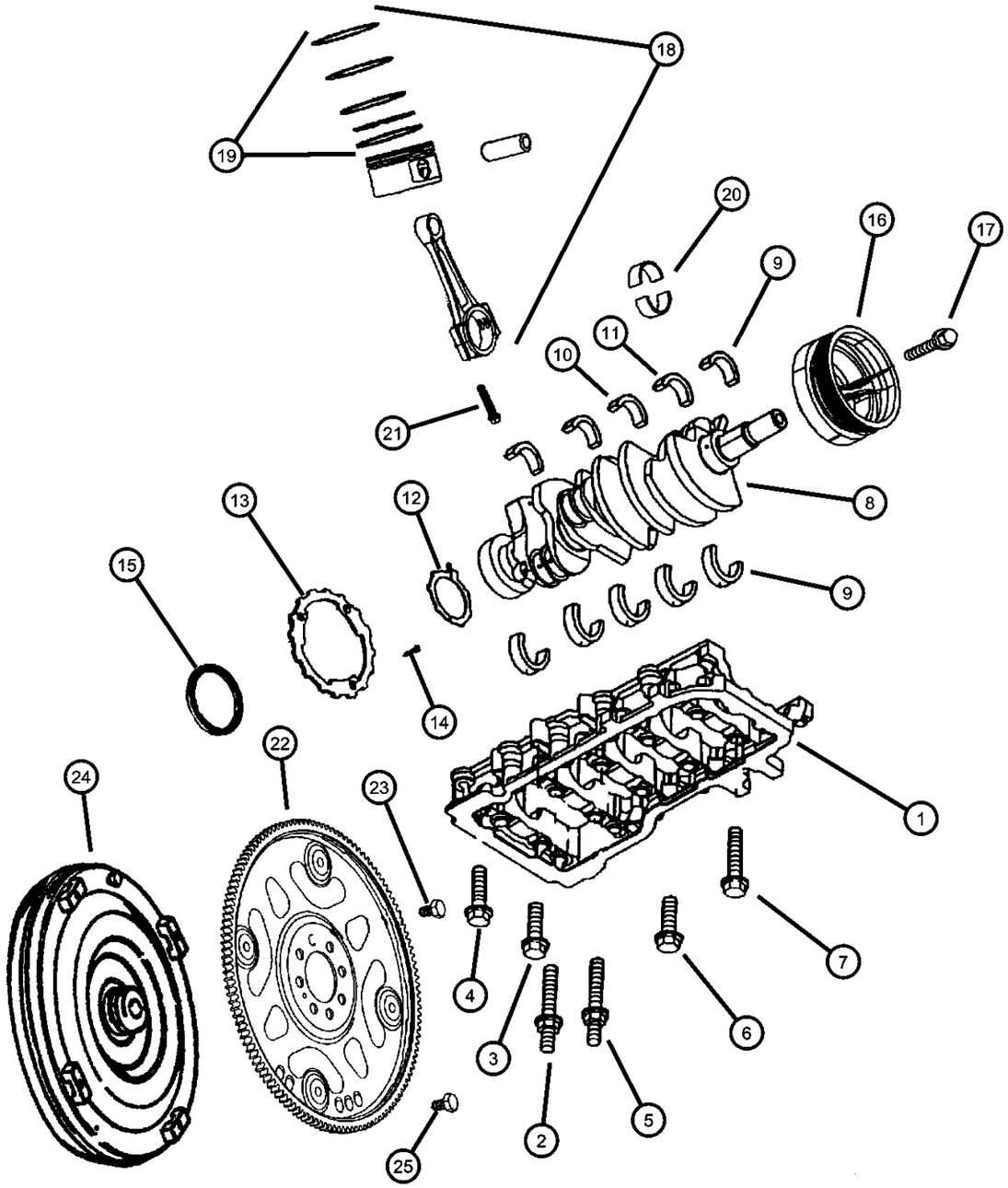

ITEM	PART NUMBER	QTY	LINE	SERIES	BODY	ENGINE	TRANS	TRIM	DESCRIPTION
Note; Sales Codes [DGQ]= 5 Speed Automatic Transmission 5-45RFE [DG0]= All Automatic Transmissions [EVA]= 4.7L Power Tech V-8 [EVC]= 4.7L Power Tech High Output V-8 [EV0]= All 4.7L Gas Engines									
1	06505274AA	2							BEDPLATE, Serviced in Short Block, (NOT SERVICED)
2	06506187AA	2				EV0			STUD
3	06102047AA	6				EV0			SCREW, Hex Head, M8x1.25x50
4	06504411	7				EV0			SCREW
5	06506186AA	1				EV0			STUD
6	06504410	5				EV0			SCREW, Hex Head
7	06505394AA	7				EV0			SCREW AND WASHER
8									CRANKSHAFT
	53020939	1				EVA	DG0		
	53021407AA	1				EVC	DG0		
9									BEARING PACKAGE, Crankshaft, A Grade
	05014183AA	5				EVA			
	05018053AA	5				EVC			
10									BEARING PACKAGE, Crankshaft, B Grade
	05013586AB	5				EVA			
	05018054AA	5				EVC			
11									BEARING PACKAGE, Crankshaft, C Grade
	05014186AA	5				EVA			
	05018055AA	5				EVC			
12	05012356AB	1				EV0			WASHER PACKAGE, Washer
13	05012356AB	1							TONE RING, Sensor, Serviced in Crankshaft, (NOT SERVICED)
14									SCREW, M6x1x25
	06504480	3				EVA	DG0		
		3				EVC	DG0		
15	53020788	1				EV0			SEAL, Crankshaft Bearing Oil
16									DAMPER, Crankshaft
	53020689AB	1				EVA			

GRAND CHEROKEE (WJ)

SERIES	LINE	BODY	ENGINE	TRANSMISSION
H = Laredo M = Sport P = Limited S = Overland	T = JEEP - 2WD J = JEEP - 4WD U = JEEP - 4WD (RHD)	74 = SPORT UTILITY 4-DR	ERH = Engine - 4.0L Power Tech I-6 EVA = Engine- 4.7L V8 MPI EVC = Engine - 4.7L HO V8 MPI ER0 = All 4.0L 6 Cyl. Gas EV0 = All 4.7L Gas	DGK = 4 Speed Auto, 42RE DGQ = 5 Speed Auto, 45RFE DG0 = All Automatic Transmissions

AR = use ase required - = Non illustrrated part

Crankshaft, Piston and Torque Converter, 4.7 [EVA, EVC]
Figure 4.7L-410

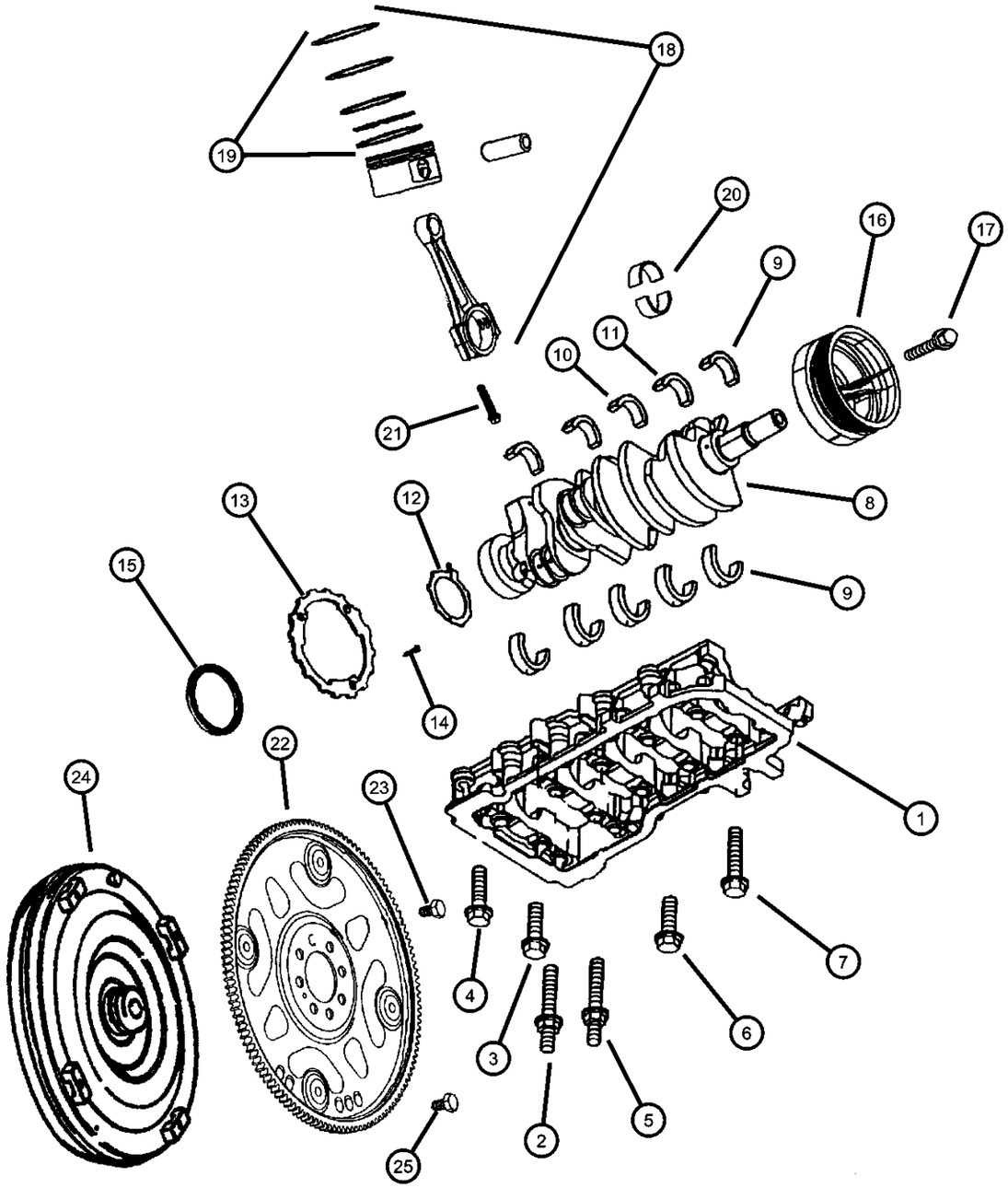

ITEM	PART NUMBER	QTY	LINE	SERIES	BODY	ENGINE	TRANS	TRIM	DESCRIPTION
	53021410AA	1				EVC			
17	06504415	1				EV0			SCREW AND WASHER
18									PISTON PIN AND ROD, STD
	05012362AC	8				EVA			
	05018018AA	8				EVC			High Output
19									RING PACKAGE, Piston, Standard Size
	05012364AC	8				EVA			
		8				EVC			
20									BEARING PACKAGE, Connecting Rod, Standard
	05012363AB	8				EVA			
	05018581AA	8				EVC			
21	06504720	16				EVA			BOLT, Connecting Rod
22	52104048	1				EV0	DGQ		PLATE, Torque Converter Drive
23	06503465	8				EV0	DG0		BOLT, Drive Plate and Flywheel
24									TORQUE CONVERTER
	04736582	1	T				DGQ		
	R4736582								Mopar Remanufactured Part
		1	J				DGQ		
	R4736582								Mopar Remanufactured Part
25	01949765	4					DG0		SCREW, Hex Head Header Point, .312-24x.44

GRAND CHEROKEE (WJ)

SERIES	LINE	BODY	ENGINE	TRANSMISSION
H = Laredo M = Sport P = Limited S = Overland	T = JEEP - 2WD J = JEEP - 4WD U = JEEP - 4WD (RHD)	74 = SPORT UTILITY 4-DR	ERH = Engine - 4.0L Power Tech I-6 EVA = Engine- 4.7L V8 MPI EVC = Engine - 4.7L HO V8 MPI ER0 = All 4.0L 6 Cyl. Gas EV0 = All 4.7L Gas	DGK = 4 Speed Auto, 42RE DGQ = 5 Speed Auto, 45RFE DG0 = All Automatic Transmissions

AR = use ase required - = Non illustrrated part

Camshaft and Valves, 4.7 [EVA, EVC]
Figure 4.7L-510

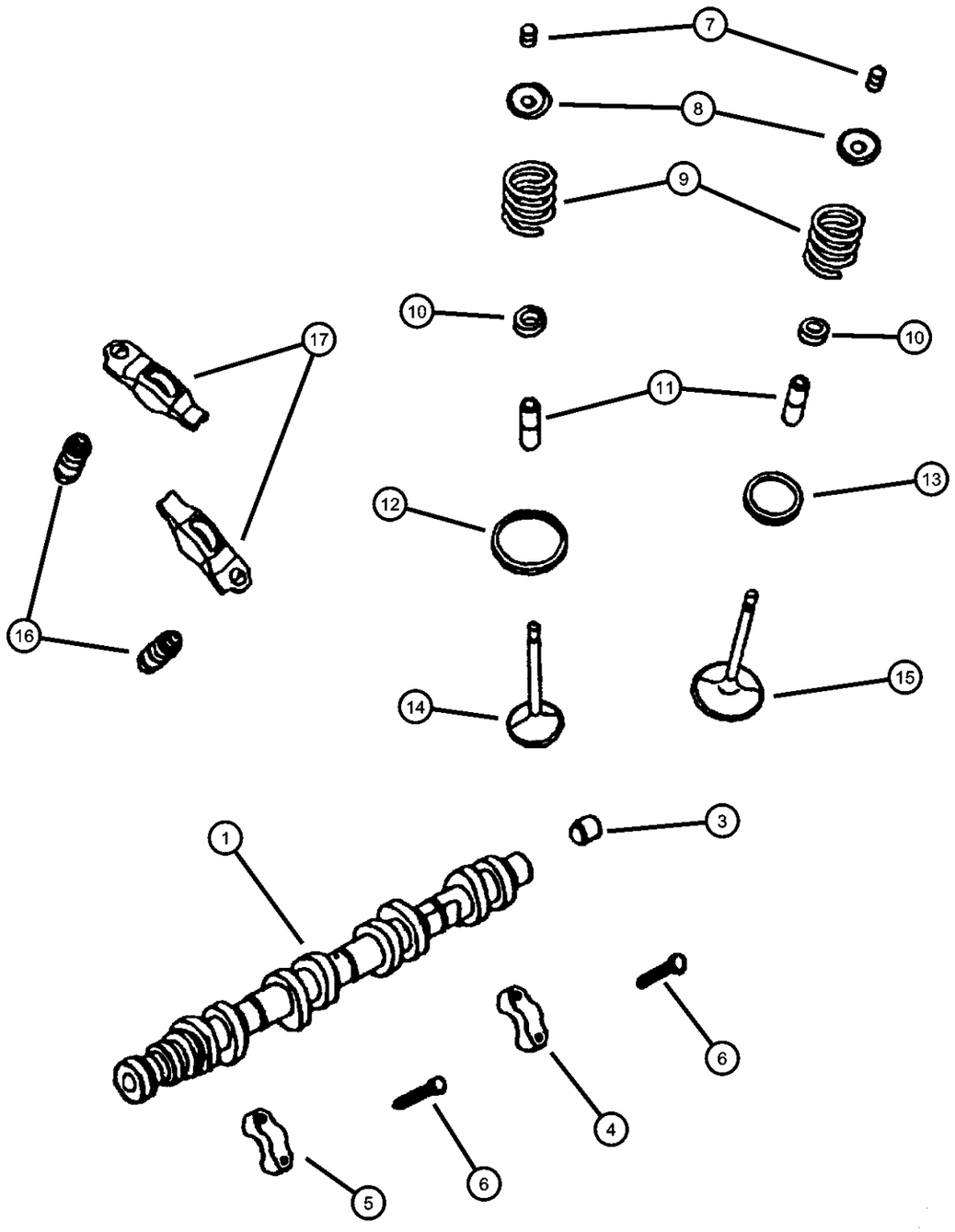

ITEM	PART NUMBER	QTY	LINE	SERIES	BODY	ENGINE	TRANS	TRIM	DESCRIPTION
Note; Sales Codes [EVA]= 4.7L Power Tech V-8 [EVC]= 4.7L Power Tech High Output V-8 [EV0]= All 4.7L Gas Engines									
1									CAMSHAFT, Engine, Left
	53021159AA	1				EVA			Left
	53021411AB	1				EVC			Left
-2									CAMSHAFT, Engine, Right
	53021160AA	1				EVA			Right
	53021412AB	1				EVC			Right
3									PLUG, Camshaft
	53021161AA	1				EVA			
		1				EVC			
4		1							CAP, Serviced in Cylinder Head, (NOT SERVICED)
5		1							CAP, Serviced in Cylinder Head, (NOT SERVICED)
6									SCREW, M6x1x40
	06505034AA	10				EVC			
		10				EVA			
7	04536513AB	32				EV0			LOCK, Valve Spring Retainer
8									RETAINER, Valve Spring
	04781090AA	16				EVC			
		16				EVA			
9									SPRING, Valve
	53020749AC	16				EVA			
	53021288AC	16				EVC			
10	53020752AD	16				EV0			SEAL, Valve Guide
11	53020752AD	16							GUIDE, Intake/Exhaust Valve, Standard Size, Serviced in Cylinder Head, (NOT SERVICED)
12	53020752AD	16							INSERT, Intake Valve, Serviced in Cylinder Head, (NOT SERVICED)
13	53020752AD	16							INSERT, Exhaust Valve, Serviced in Cylinder Head, (NOT SERVICED)
14	53020747AB	8				EV0			VALVE, Intake, Standard
15									VALVE, Exhaust, Standard

GRAND CHEROKEE (WJ)

SERIES	LINE	BODY	ENGINE	TRANSMISSION
H = Laredo M = Sport P = Limited S = Overland	T = JEEP - 2WD J = JEEP - 4WD U = JEEP - 4WD (RHD)	74 = SPORT UTILITY 4-DR	ERH = Engine - 4.0L Power Tech I-6 EVA = Engine- 4.7L V8 MPI EVC = Engine - 4.7L HO V8 MPI ER0 = All 4.0L 6 Cyl. Gas EV0 = All 4.7L Gas	DGK = 4 Speed Auto, 42RE DGQ = 5 Speed Auto, 45RFE DG0 = All Automatic Transmissions

Camshaft and Valves, 4.7 [EVA, EVC]
Figure 4.7L-510

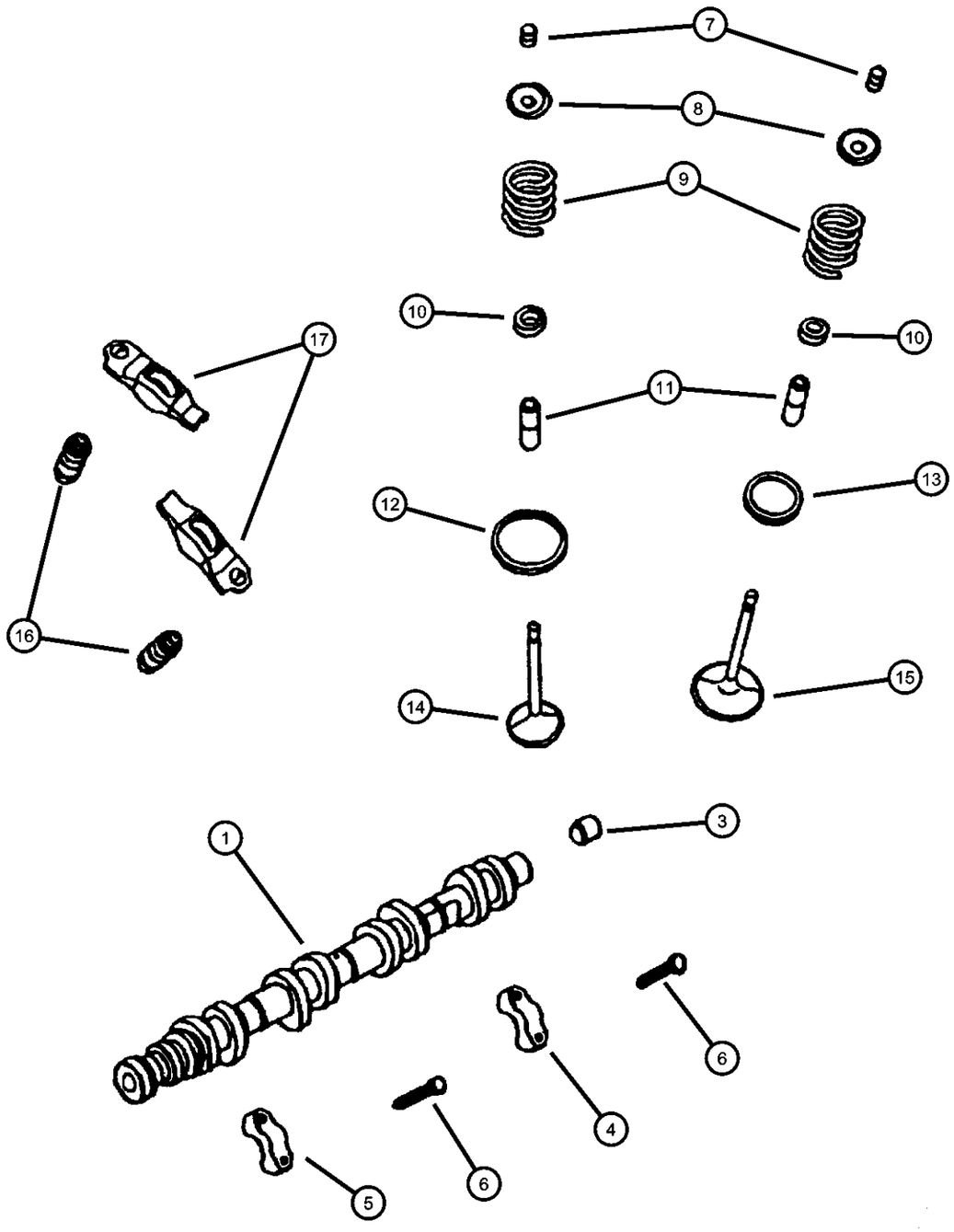

ITEM	PART NUMBER	QTY	LINE	SERIES	BODY	ENGINE	TRANS	TRIM	DESCRIPTION
	53020748	8				EVA			
	53021571AA	8				EVC			
16	53021077	16				EV0			ADJUSTER, Valve Lash
17	53020742AB	16				EV0			ROCKER ARM, Valve

GRAND CHEROKEE (WJ)

SERIES	LINE	BODY	ENGINE	TRANSMISSION
H = Laredo M = Sport P = Limited S = Overland	T = JEEP - 2WD J = JEEP - 4WD U = JEEP - 4WD (RHD)	74 = SPORT UTILITY 4-DR	ERH = Engine - 4.0L Power Tech I-6 EVA = Engine- 4.7L V8 MPI EVC = Engine - 4.7L HO V8 MPI ER0 = All 4.0L 6 Cyl. Gas EV0 = All 4.7L Gas	DGK = 4 Speed Auto, 42RE DGQ = 5 Speed Auto, 45RFE DG0 = All Automatic Transmissions

AR = use ase required - = Non illustrrated part

Timing Cover, 4.7 [EVA, EVC]
Figure 4.7L-610

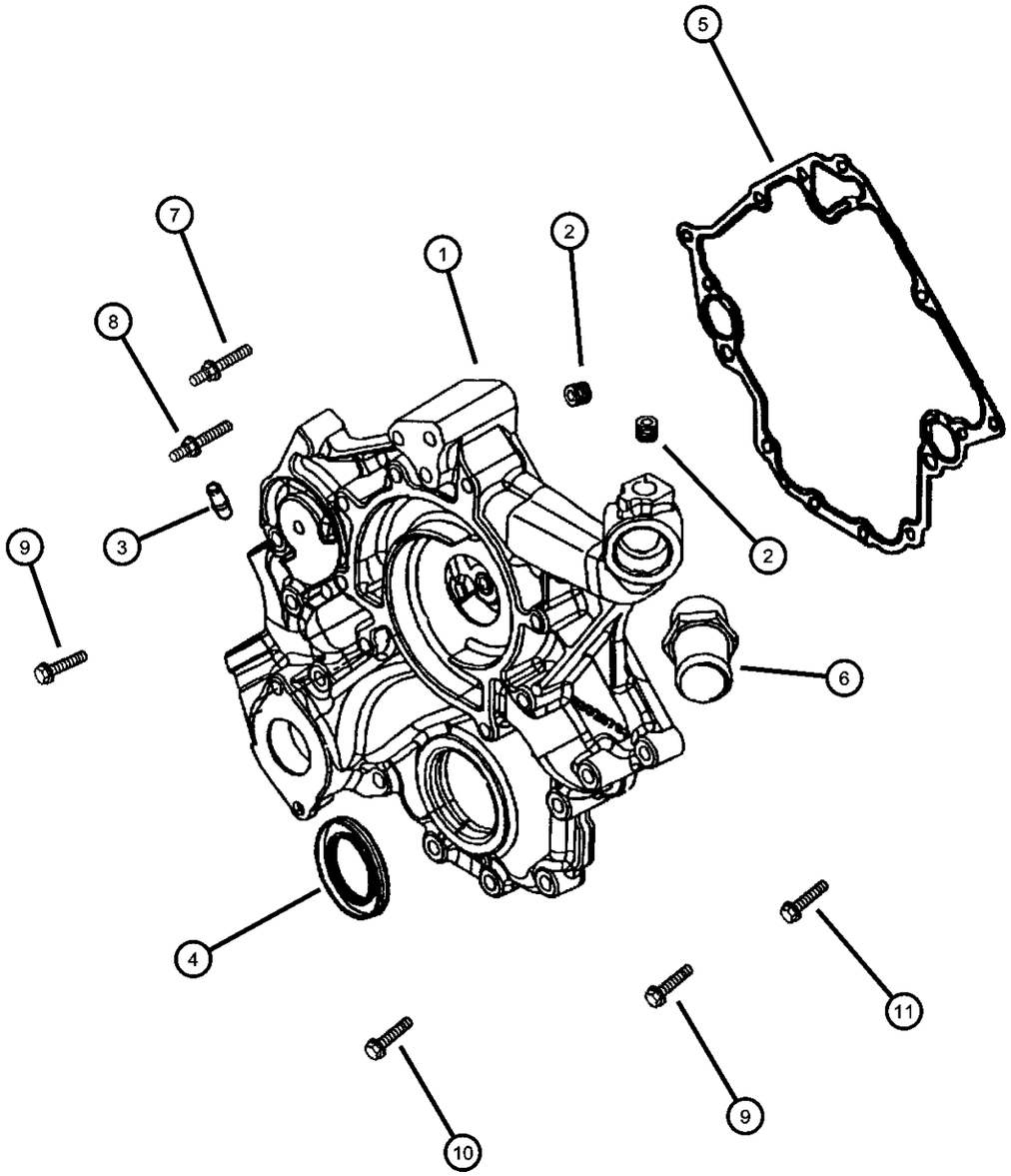

ITEM	PART NUMBER	QTY	LINE	SERIES	BODY	ENGINE	TRANS	TRIM	DESCRIPTION
Note; Sales Codes [EV0]= All 4.7L Gas Engines									
1	53021714AB	1				EV0			COVER, Timing Case
2	06034331	3				EV0			PLUG, Hex Socket, 3/8-18NPTx.475
3	06035854	2				EV0			FITTING, Y-Style
4	53021313AA	1				EV0			SEAL, Crankshaft Oil, Front
5	53020862	1				EV0			GASKET, Chain Case Cover
6	53020862	1							PIPE, Serviced With Item 1, (NOT SERVICED)
7	06505293AA	1				EV0			STUD
8	06506734AA	1				EV0			STUD
9	06101998	5				EV0			SCREW AND WASHER, Hex
10	06507144AA	5				EV0			SCREW AND WASHER, M10x1.50x45.00
11	06505579AA	2				EV0			SCREW AND WASHER

GRAND CHEROKEE (WJ)

SERIES	LINE	BODY	ENGINE	TRANSMISSION
H = Laredo M = Sport P = Limited S = Overland	T = JEEP - 2WD J = JEEP - 4WD U = JEEP - 4WD (RHD)	74 = SPORT UTILITY 4-DR	ERH = Engine - 4.0L Power Tech I-6 EVA = Engine- 4.7L V8 MPI EVC = Engine - 4.7L HO V8 MPI ER0 = All 4.0L 6 Cyl. Gas EV0 = All 4.7L Gas	DGK = 4 Speed Auto, 42RE DGQ = 5 Speed Auto, 45RFE DG0 = All Automatic Transmissions

Timing Chain and Guides, 4.7 [EVA, EVC]
Figure 4.7L-620

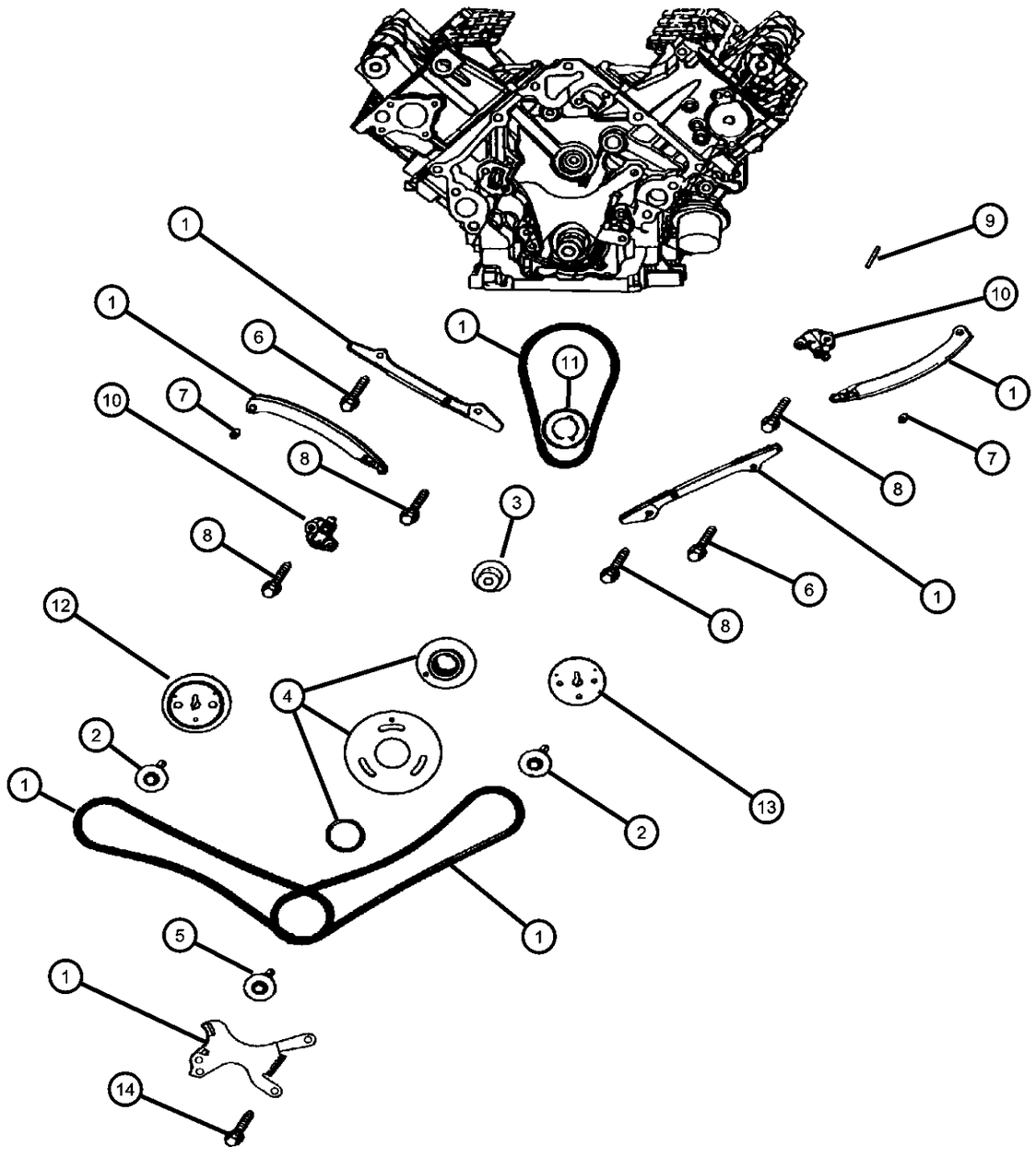

ITEM	PART NUMBER	QTY	LINE	SERIES	BODY	ENGINE	TRANS	TRIM	DESCRIPTION
Note; Sales Codes									
[EV0]= All 4.7L Gas Engines									
1	05013867AB	1				EV0			TIMING DRIVE PACKAGE, Engine
2	06504429	2				EV0			SCREW AND WASHER, Hex
3	53020835	1				EV0			SHAFT, Idler
4	05013868AB	1				EV0			SPROCKET, Idler
5	06504370	1				EV0			SCREW AND WASHER, Hex
6	06102111AA	2				EV0			SCREW AND WASHER
7	06504440	2				EV0			SCREW, Also Serviced In Item# 1
8	06503257	6				EV0			BOLT, Hex Head, M8x1.25x37.50
9	06504471	1				EV0			KEY, Woodruff
10									TENSIONER, Chain
	53020779	1				EV0			Right
	53021168AA	1				EV0			Left
11	53020679	1				EV0			SPROCKET, Crankshaft
12	53021169AA	1				EV0			SPROCKET, Camshaft, RightRight
13	53020938	1				EV0			SPROCKET, Camshaft, LeftLeft
14	06100932	2				EV0			BOLT, Hex
-15	53020681	1				EV0			TENSIONER, Chain, Primary

GRAND CHEROKEE (WJ)

SERIES	LINE	BODY	ENGINE	TRANSMISSION
H = Laredo M = Sport P = Limited S = Overland	T = JEEP - 2WD J = JEEP - 4WD U = JEEP - 4WD (RHD)	74 = SPORT UTILITY 4-DR	ERH = Engine - 4.0L Power Tech I-6 EVA = Engine- 4.7L V8 MPI EVC = Engine - 4.7L HO V8 MPI ER0 = All 4.0L 6 Cyl. Gas EV0 = All 4.7L Gas	DGK = 4 Speed Auto, 42RE DGQ = 5 Speed Auto, 45RFE DG0 = All Automatic Transmissions

Engine Oiling, 4.7 [EVA, EVC]
Figure 4.7L-710

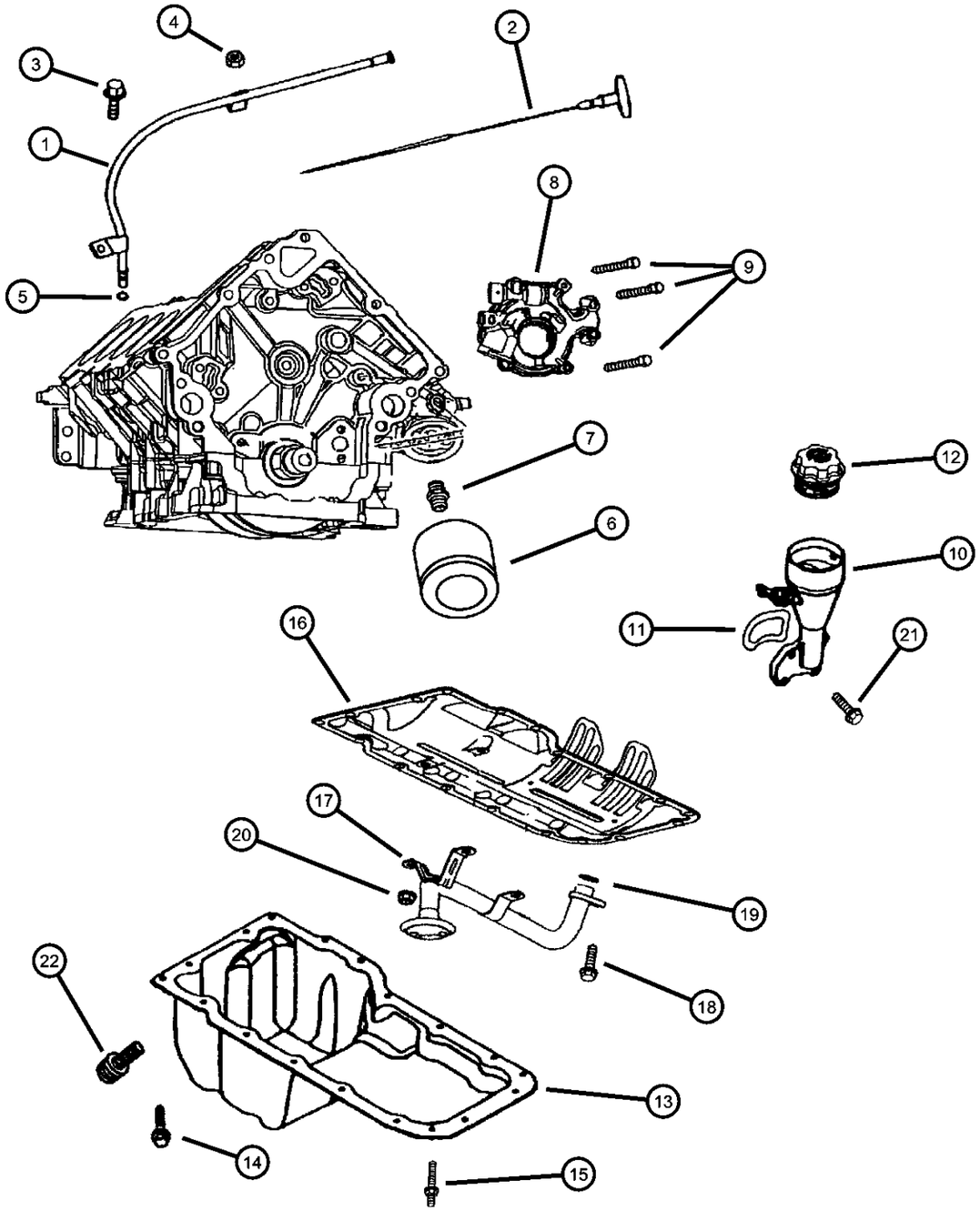

ITEM	PART NUMBER	QTY	LINE	SERIES	BODY	ENGINE	TRANS	TRIM	DESCRIPTION
Note; Sales Codes [EV0]= All 4.7L Gas Engines									
1	53021024	1				EV0			TUBE, Engine Oil Indicator
2	53020859AB	1				EV0			INDICATOR, Engine Oil Level
3	06504810AA	1				EV0			SCREW AND WASHER, Hex
4	06101802	1				EV0			NUT
5	53021144AA	1				EV0			O RING, Engine Oil Indicator
6	05281090	1				EV0			FILTER, Engine Oil
	0FE00292								Canadian Aftermarket Part
	05281090BA								BULK PACK (12)
	77060018								Performance Mobil 1, 15W - 50 Tri-Synthetic Engine Oil- Recommended Fill for 6.1L & 8.3L
	P5007323								Performance Mobil 1, 5W - 30 Tri-Synthetic Engine Oil, Quart
7	53007563	1				EV0			CONNECTOR, Oil Filter
8	53020827	1				EV0			PUMP, Engine Oil
9	06100932	1				EV0			BOLT, Hex
10	53020890	1				EV0			HOUSING, Oil Fill
11	53020889AB	1				EV0			GASKET, Oil Fill Housing
12	53032389AC	1				EV0			CAP, Oil Filler
13	53020678AB	1				EV0			PAN, Engine Oil
14	06504810AA	17				EV0			SCREW AND WASHER, Hex
15	06505889AA	1				EV0			STUD
16	53020675AC	1				EV0			GASKET, Oil Pan
17	53020828	1				EV0			TUBE, Oil Pickup
18	06102046AA	1				EV0			SCREW AND WASHER
19	53020861	1				EV0			SEAL, Oil Pick Up Tube
20	06502756	3				EV0			NUT, Hex Lock, M8x1.25
21	06505504AA	4				EV0			SCREW
22	06504894AA	1				EV0			PLUG, Oil Drain

GRAND CHEROKEE (WJ)

SERIES	LINE	BODY	ENGINE	TRANSMISSION
H = Laredo M = Sport P = Limited S = Overland	T = JEEP - 2WD J = JEEP - 4WD U = JEEP - 4WD (RHD)	74 = SPORT UTILITY 4-DR	ERH = Engine - 4.0L Power Tech I-6 EVA = Engine- 4.7L V8 MPI EVC = Engine - 4.7L HO V8 MPI ER0 = All 4.0L 6 Cyl. Gas EV0 = All 4.7L Gas	DGK = 4 Speed Auto, 42RE DGQ = 5 Speed Auto, 45RFE DG0 = All Automatic Transmissions

Manifold, Intake and Exhaust, 4.7 [EVA, EVC]
Figure 4.7L-810

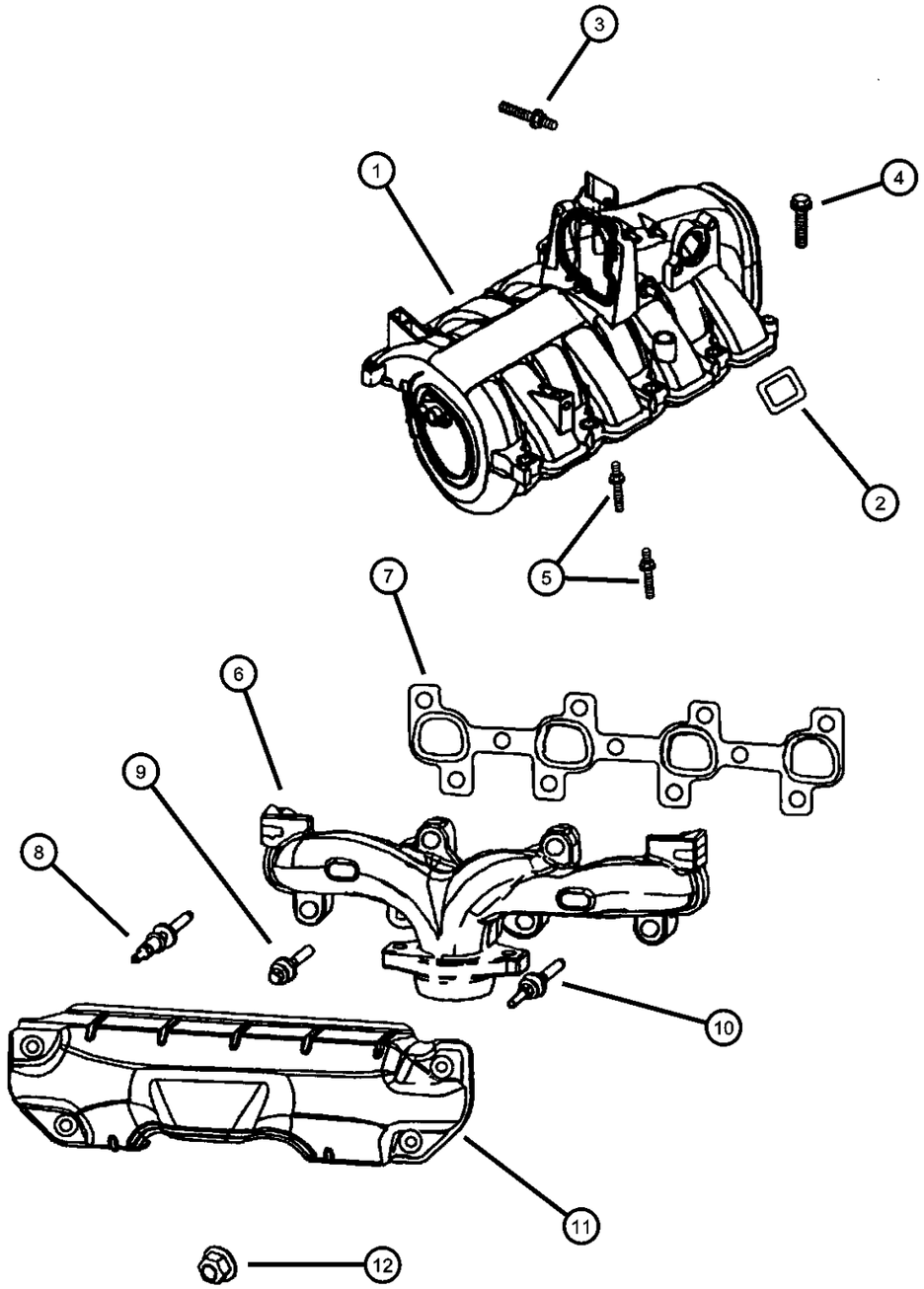

ITEM	PART NUMBER	QTY	LINE	SERIES	BODY	ENGINE	TRANS	TRIM	DESCRIPTION
Note; Sales Codes [EVA]= 4.7L Power Tech V-8 [EVC]= 4.7L Power Tech High Output V-8 [EV0]= All 4.7L Gas Engines									
1									MANIFOLD, Intake
	53010315AG	1				EVA			
	53031739AC	1				EVC			
2									SEAL, Intake Manifold
	53010310	8				EVC			
		8				EVA			
3									STUD
	06505498AA	1				EVC			
		1				EVA			
4	06505499AA	2				EV0			SCREW
5	06505500AA	8				EV0			STUD
6									MANIFOLD, Exhaust
	53030933	1				EV0			Left
	53030934	1				EV0			Right
7									GASKET, Exhaust Manifold
	53030812	1				EV0			Right
	53030813	1				EV0			Left
8	06505257AA	4				EV0			STUD
9	06504340	8				EV0			SCREW AND WASHER, Hex
10	06504331	4				EV0			STUD
11									SHIELD, Exhaust Manifold
	53030815	1				EV0			Left
	53030940	1				EV0			Right
12	06505316AA	8				EV0			NUT

GRAND CHEROKEE (WJ)

SERIES	LINE	BODY	ENGINE	TRANSMISSION
H = Laredo M = Sport P = Limited S = Overland	T = JEEP - 2WD J = JEEP - 4WD U = JEEP - 4WD (RHD)	74 = SPORT UTILITY 4-DR	ERH = Engine - 4.0L Power Tech I-6 EVA = Engine- 4.7L V8 MPI EVC = Engine - 4.7L HO V8 MPI ER0 = All 4.0L 6 Cyl. Gas EV0 = All 4.7L Gas	DGK = 4 Speed Auto, 42RE DGQ = 5 Speed Auto, 45RFE DG0 = All Automatic Transmissions

Crankcase Ventilation, 4.7 [EVA, EVC]
Figure 4.7L-910

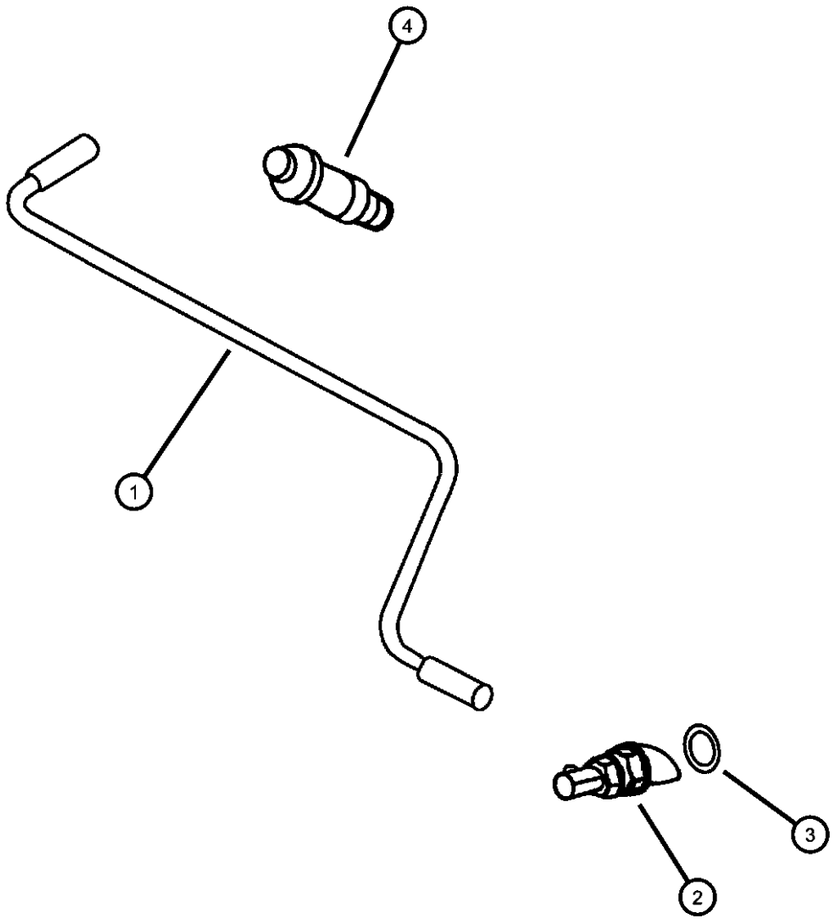

ITEM	PART NUMBER	QTY	LINE	SERIES	BODY	ENGINE	TRANS	TRIM	DESCRIPTION
Note; Sales Codes									
[EV0]= All 4.7L Gas Engines									
1	53030851AC	1				EV0			TUBE, PCV Valve
2	53032800AA	1				EV0			VALVE, Crankcase Vent
3	53031711AA	1				EV0			O RING
4	53030850AB	2				EV0			BREATHER, Crankcase

GRAND CHEROKEE (WJ)

SERIES	LINE	BODY	ENGINE	TRANSMISSION
H = Laredo M = Sport P = Limited S = Overland	T = JEEP - 2WD J = JEEP - 4WD U = JEEP - 4WD (RHD)	74 = SPORT UTILITY 4-DR	ERH = Engine - 4.0L Power Tech I-6 EVA = Engine- 4.7L V8 MPI EVC = Engine - 4.7L HO V8 MPI ER0 = All 4.0L 6 Cyl. Gas EV0 = All 4.7L Gas	DGK = 4 Speed Auto, 42RE DGQ = 5 Speed Auto, 45RFE DG0 = All Automatic Transmissions

Group - 11

Exhaust

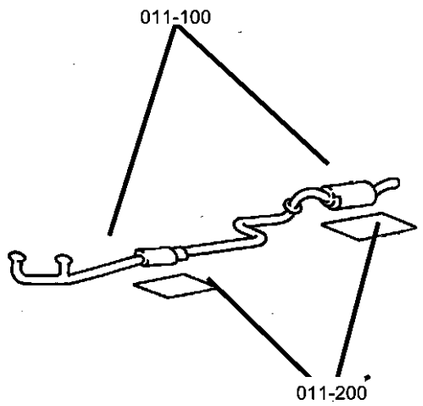

011-100 Exhaust System 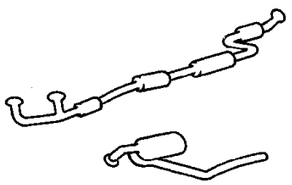	**011-200** Heat Shields 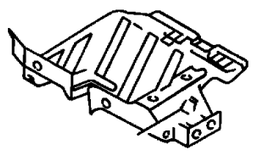		

Group - 11 Exhaust

Illustration Title — Group-Fig. No.

Exhaust System
Exhaust System, 4.0 [ERH] ..... Fig. 11 - 110
Exhaust System, 4.7 [EVA,EVC] ..... Fig. 11 - 120

Heat Shields
Heat Shields, 4.0 [ERH], 4.7 [EVA, EVC] ..... Fig. 11 - 210

Exhaust System, 4.0 [ERH]
Figure 11-110

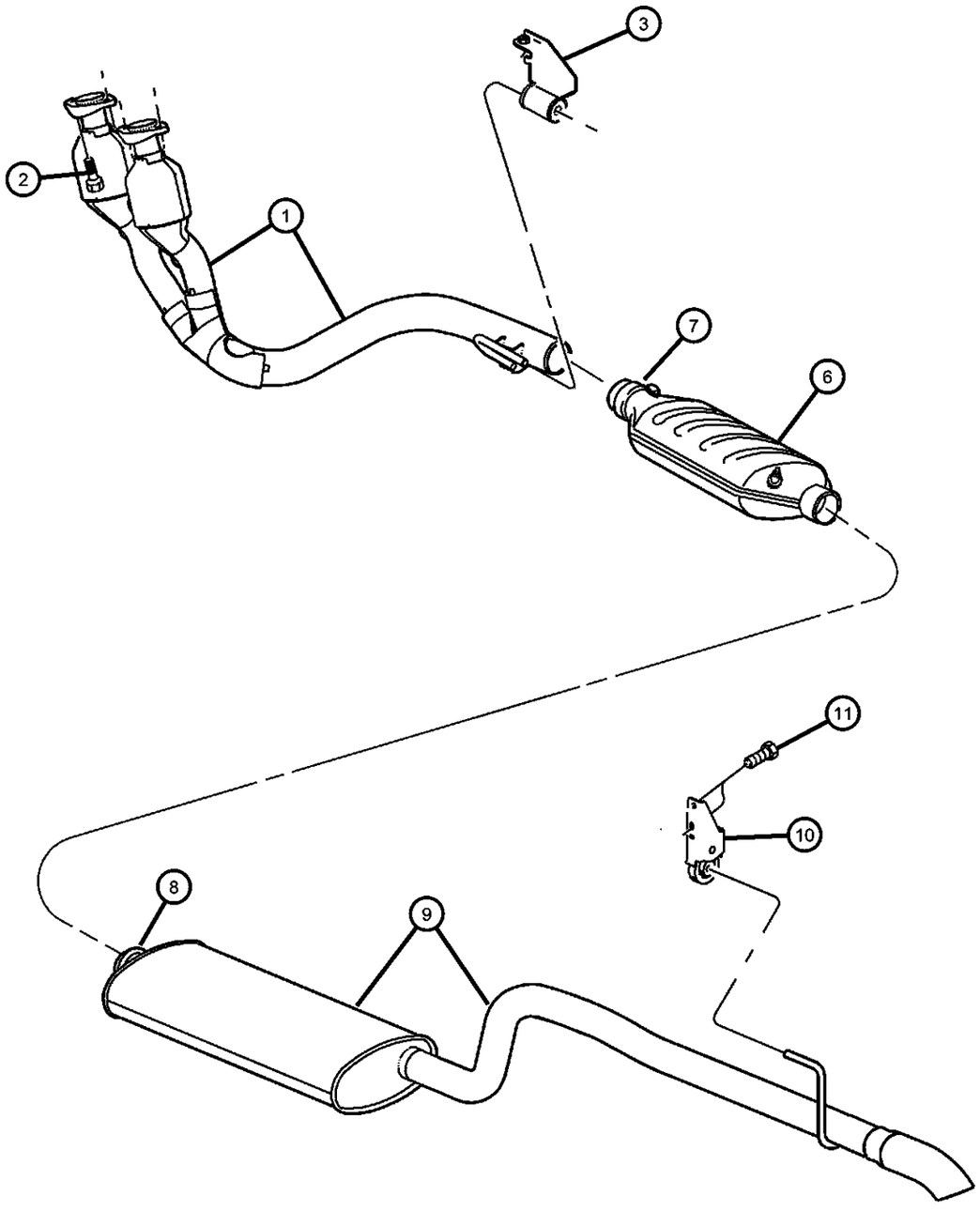

ITEM	PART NUMBER	QTY	LINE	SERIES	BODY	ENGINE	TRANS	TRIM	DESCRIPTION
Note; Sales Codes [ER0]= All 4.0L, 6 Cylinder Gas Engines									
1	52101236AB	1				ER0			PIPE AND CONVERTER, Exhaust, U.S. 50 States
2	06507051AA	4				ER0			SCREW, Hex Head
3	52101017AC	1				ER0			HANGER, Exhaust
-4	06022266	1				ER0			SCREW, Hex Head, .375-16x1.5
-5	00152474	1	T			ER0			NUT, Hex Flange Lock, .375-16
6									CONVERTER, Catalytic
	52101224AC	1				ER0			Federal
	52101228AC	1				ER0			California
7	52101228AC	1							CLAMP, Serviced With Converter, (NOT SERVICED),
8	52101228AC	1							CLAMP, Exhaust, Serviced With Muffler and Tailpipe, (NOT SERVICED)
9	52101239AB	1				ER0			MUFFLER AND TAILPIPE, Exhaust
	E0019374UF								Dynomax Cat Back Single Exhaust
10	52101141AD	1							HANGER, Tailpipe
11	52101141AD	1							SCREW, (NOT SERVICED)
-12	06503231	4				EV0			NUT, M10x1.50

GRAND CHEROKEE (WJ)

SERIES	LINE	BODY	ENGINE	TRANSMISSION
H = Laredo M = Sport P = Limited S = Overland	T = JEEP - 2WD J = JEEP - 4WD U = JEEP - 4WD (RHD)	74 = SPORT UTILITY 4-DR	ERH = Engine - 4.0L Power Tech I-6 EVA = Engine- 4.7L V8 MPI EVC = Engine - 4.7L HO V8 MPI ER0 = All 4.0L 6 Cyl. Gas EV0 = All 4.7L Gas	DGK = 4 Speed Auto, 42RE DGQ = 5 Speed Auto, 45RFE DG0 = All Automatic Transmissions

Exhaust System, 4.7 [EVA,EVC]
Figure 11-120

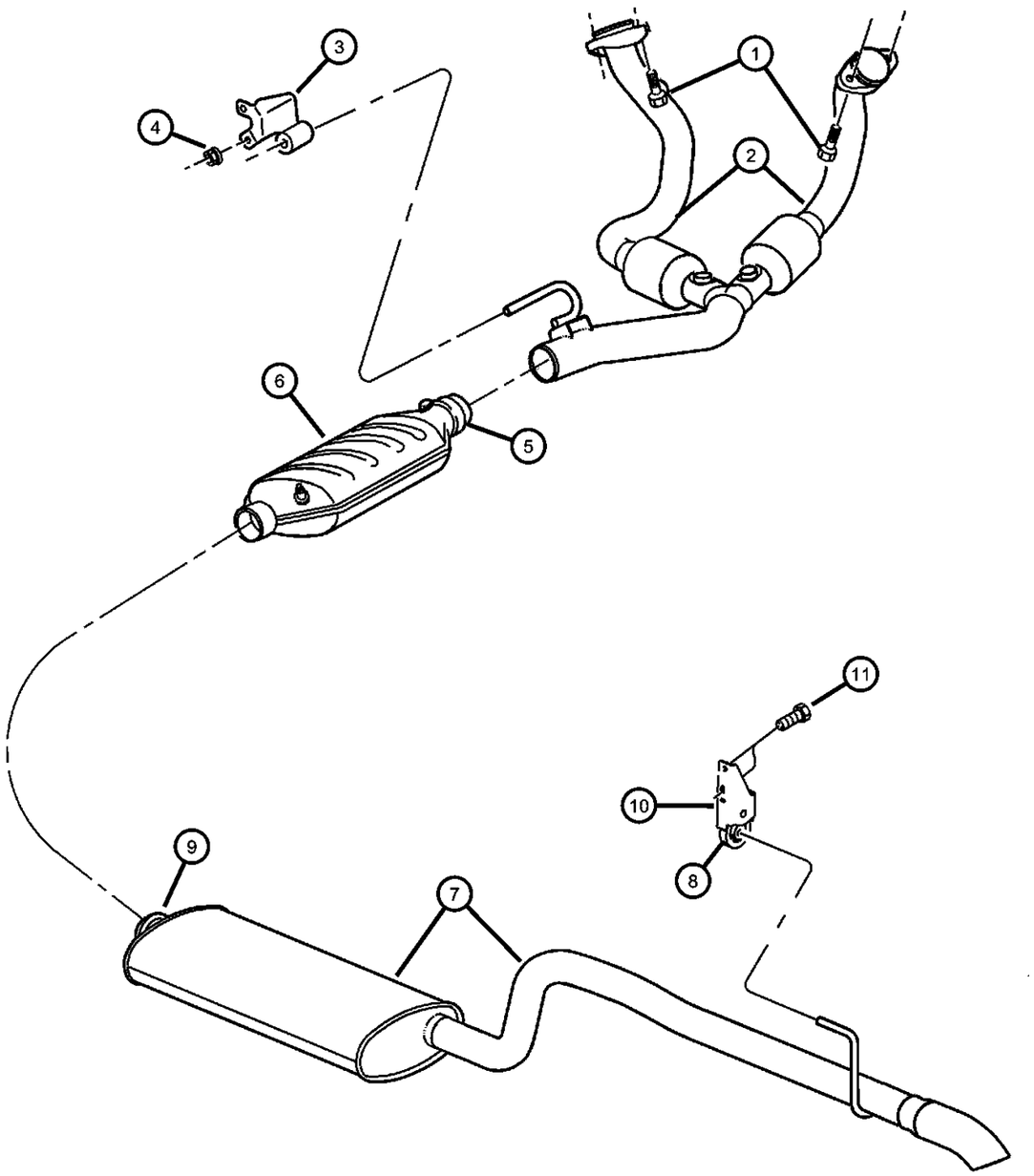

ITEM	PART NUMBER	QTY	LINE	SERIES	BODY	ENGINE	TRANS	TRIM	DESCRIPTION
Note; Sales Codes [EVA]= 4.7L Power Tech V-8 [EVC]= 4.7L Power Tech High Output V-8 [EV0]= All 4.7L Gas Engines									
1	06506012AA	4				EV0			SCREW, Hex Head
2	52101235AB	1				EV0			PIPE AND CONVERTER, Exhaust
3	52101018AC	1				EV0			HANGER, Exhaust
4	06502696	2				EV0			NUT, Hex Flange Lock, M14x1.50
5	06502696	2							CLAMP, Serviced With Cnverter, (NOT SERVICED)
6	52080276AA	1				EV0			CONVERTER, Catalytic
7									MUFFLER AND TAILPIPE, Exhaust
	52080335AA	1				EVC			
	E0019374UF								Dynomax Cat Back Single Exhaust
	52101237AB	1				EVA			
	E0019374UF								Dynomax Cat Back Single Exhaust
8	52101068AA	1							INSULATOR, Exhaust
9	52101068AA	1							CLAMP, Exhaust, Serviced With Muffler and Tailpipe, (NOT SERVICED)
10	52101141AD	1							HANGER, Tailpipe
11	52101141AD	1							SCREW, (NOT SERVICED)
-12	06503231	4				EV0			NUT, Brake Line

GRAND CHEROKEE (WJ)

SERIES	LINE	BODY	ENGINE	TRANSMISSION
H = Laredo M = Sport P = Limited S = Overland	T = JEEP - 2WD J = JEEP - 4WD U = JEEP - 4WD (RHD)	74 = SPORT UTILITY 4-DR	ERH = Engine - 4.0L Power Tech I-6 EVA = Engine- 4.7L V8 MPI EVC = Engine - 4.7L HO V8 MPI ER0 = All 4.0L 6 Cyl. Gas EV0 = All 4.7L Gas	DGK = 4 Speed Auto, 42RE DGQ = 5 Speed Auto, 45RFE DG0 = All Automatic Transmissions

Heat Shields, 4.0 [ERH], 4.7 [EVA, EVC]
Figure 11-210

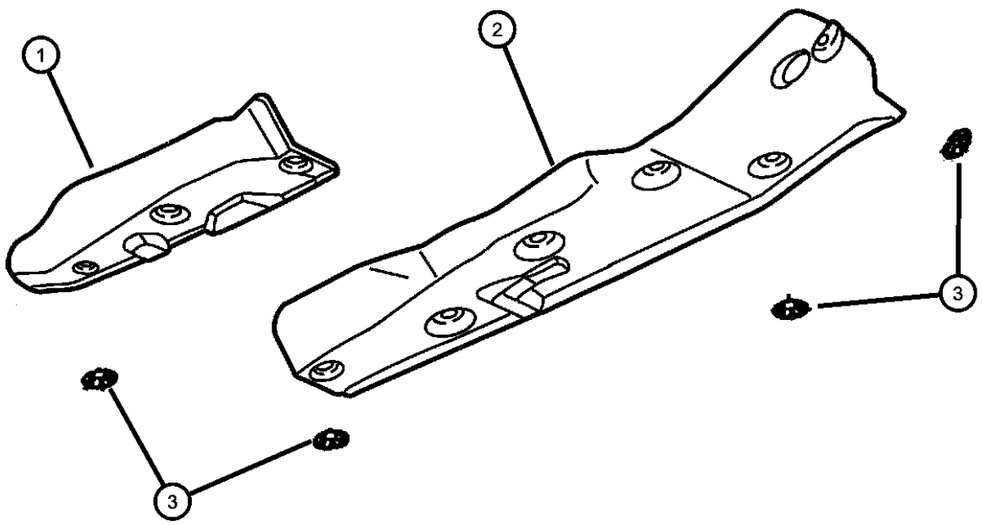

ITEM	PART NUMBER	QTY	LINE	SERIES	BODY	ENGINE	TRANS	TRIM	DESCRIPTION
1	55135712AF	1							SHIELD, Heat
2	55135709AC	1							SHIELD, Heat
3	55135709AC	1							NUT, Heat Shield Attach, M5x1.60, (NOT SERVICED)
-4	53013669AA	1				ER0			SHIELD, Exhaust Manifold
-5	06503683	1				ER0			PIN, Push

GRAND CHEROKEE (WJ)

SERIES	LINE	BODY	ENGINE	TRANSMISSION
H = Laredo M = Sport P = Limited S = Overland	T = JEEP - 2WD J = JEEP - 4WD U = JEEP - 4WD (RHD)	74 = SPORT UTILITY 4-DR	ERH = Engine - 4.0L Power Tech I-6 EVA = Engine- 4.7L V8 MPI EVC = Engine - 4.7L HO V8 MPI ER0 = All 4.0L 6 Cyl. Gas EV0 = All 4.7L Gas	DGK = 4 Speed Auto, 42RE DGQ = 5 Speed Auto, 45RFE DG0 = All Automatic Transmissions

Group - 13

Frames and Bumpers

013-200 Front Bumper and Fascia 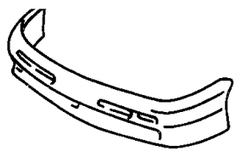	**013-300** Rear Bumper and Fascia 	**013-600** Trailer Tow 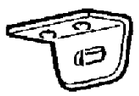	

Group - 13 Frames and Bumpers

Illustration Title — Group-Fig. No.

Front Bumper and Fascia
Bumper, Front ..... Fig. 13 - 240

Rear Bumper and Fascia
Bumper, Rear ..... Fig. 13 - 340

Trailer Tow
Tow Eye ..... Fig. 13 - 610
Rear Hitch ..... Fig. 13 - 620

Bumper, Front
Figure 13-240

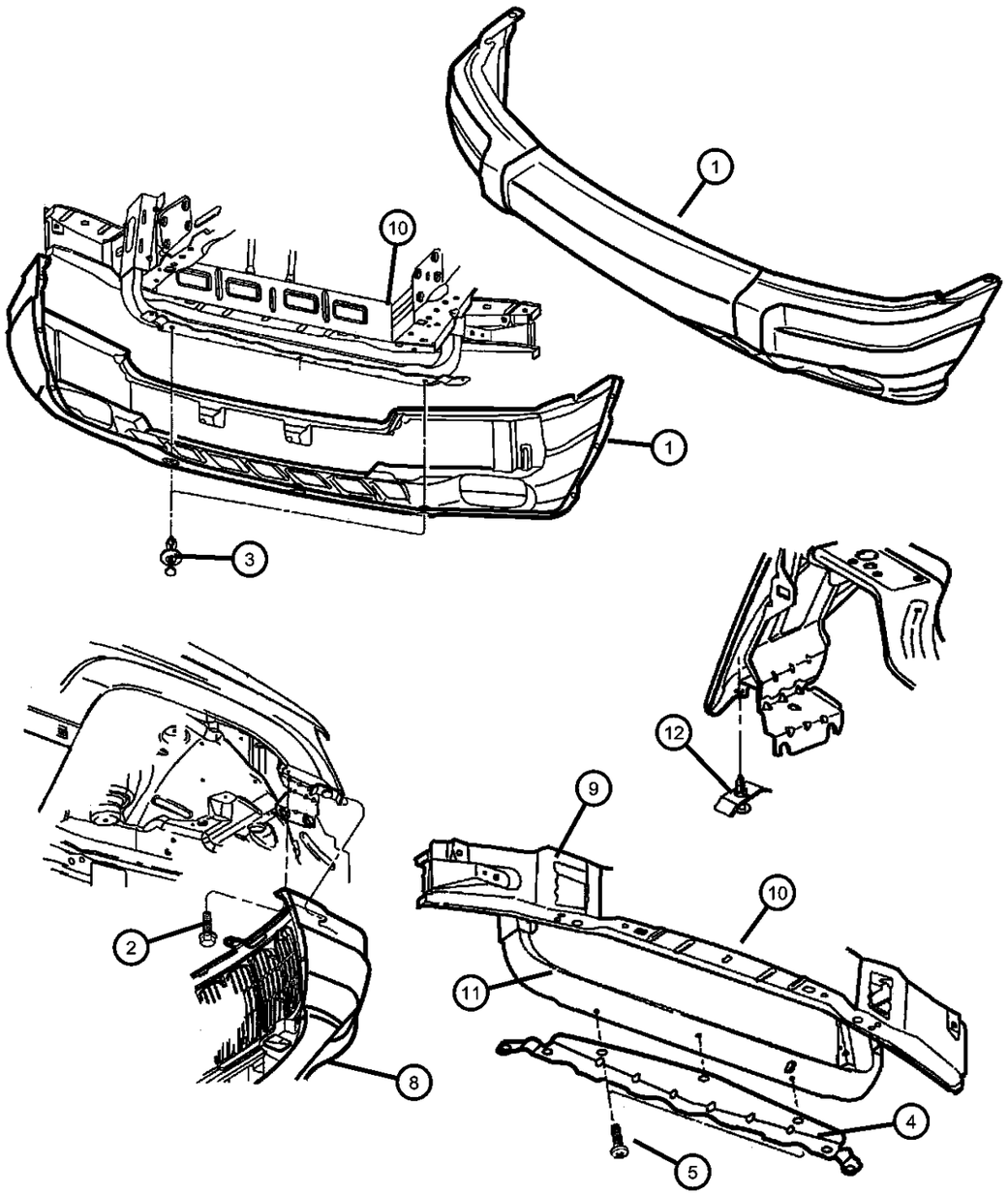

ITEM	PART NUMBER	QTY	LINE	SERIES	BODY	ENGINE	TRANS	TRIM	DESCRIPTION
1									FASCIA, Front
	05072588AA	1		S					Paint As Required
	05083100AA	1		P					Paint As Required
		1		H					Paint as Required With [ALZ]
	5EU79VF7AB	1		H					[DR] [After 8-2-01] Without Fog Lamps [LNJ]
		1		H					[EL] [After 8-2-01] Without Fog Lamps [LNJ]
		1		H					[FF] [After 5-1-02] Without Fog Lamps [LNJ]
		1		H					[RV][After 8-2-01] Without Fog Lamps [LNJ]
		1		H					[S5] [After 8-2-01] Without Fog Lamps [LNJ]
		1		H					[UB] [After 8-2-01] Without Fog Lamps [LNJ]
		1		H					[W1] [After 8-2-01] Without Fog Lamps [LNJ]
	5EU79XS9AB	1		H					[Up to 8-2-01] Without Fog Lamps, [BQ,BT,JR,X8,DR,EL,RV,S5,UB,W1]
		1		M					[Up to 8-2-01] Without Fog Lamps, [BQ,BT,JR,X8,DR,EL,RV,S5,UB,W1]
		1		H					[BQ] [After 8-2-01] Without Fog Lamps [LNJ]
		1		H					[BT] [After 8-2-01] Without Fog Lamps [LNJ]
		1		H					[JR] [After 8-2-01] Without Fog Lamps [LNJ]
		1		H					[SB] [After 1-1-02] Without Fog Lamps [LNJ]
		1		H					[XR] [After 3-1-02] Without Fog Lamps [LNJ]
		1		H					[X8] [After 8-2-01] Without Fog Lamps [LNJ]
	5FN29VF7AB	1		H					[EL] [After 8-2-01] With Fog Lamps [LNJ]
		1		H					[S5] [After 8-2-01] With Fog Lamps [LNJ]
		1		H					[UB] [After 8-2-01] With Fog Lamps [LNJ]
		1		H					[W1] [After 8-2-01] With Fog Lamps [LNJ]

GRAND CHEROKEE (WJ)

SERIES	LINE	BODY	ENGINE	TRANSMISSION
H = Laredo M = Sport P = Limited S = Overland	T = JEEP - 2WD J = JEEP - 4WD U = JEEP - 4WD (RHD)	74 = SPORT UTILITY 4-DR	ERH = Engine - 4.0L Power Tech I-6 EVA = Engine- 4.7L V8 MPI EVC = Engine - 4.7L HO V8 MPI ER0 = All 4.0L 6 Cyl. Gas EV0 = All 4.7L Gas	DGK = 4 Speed Auto, 42RE DGQ = 5 Speed Auto, 45RFE DG0 = All Automatic Transmissions

Bumper, Front
Figure 13-240

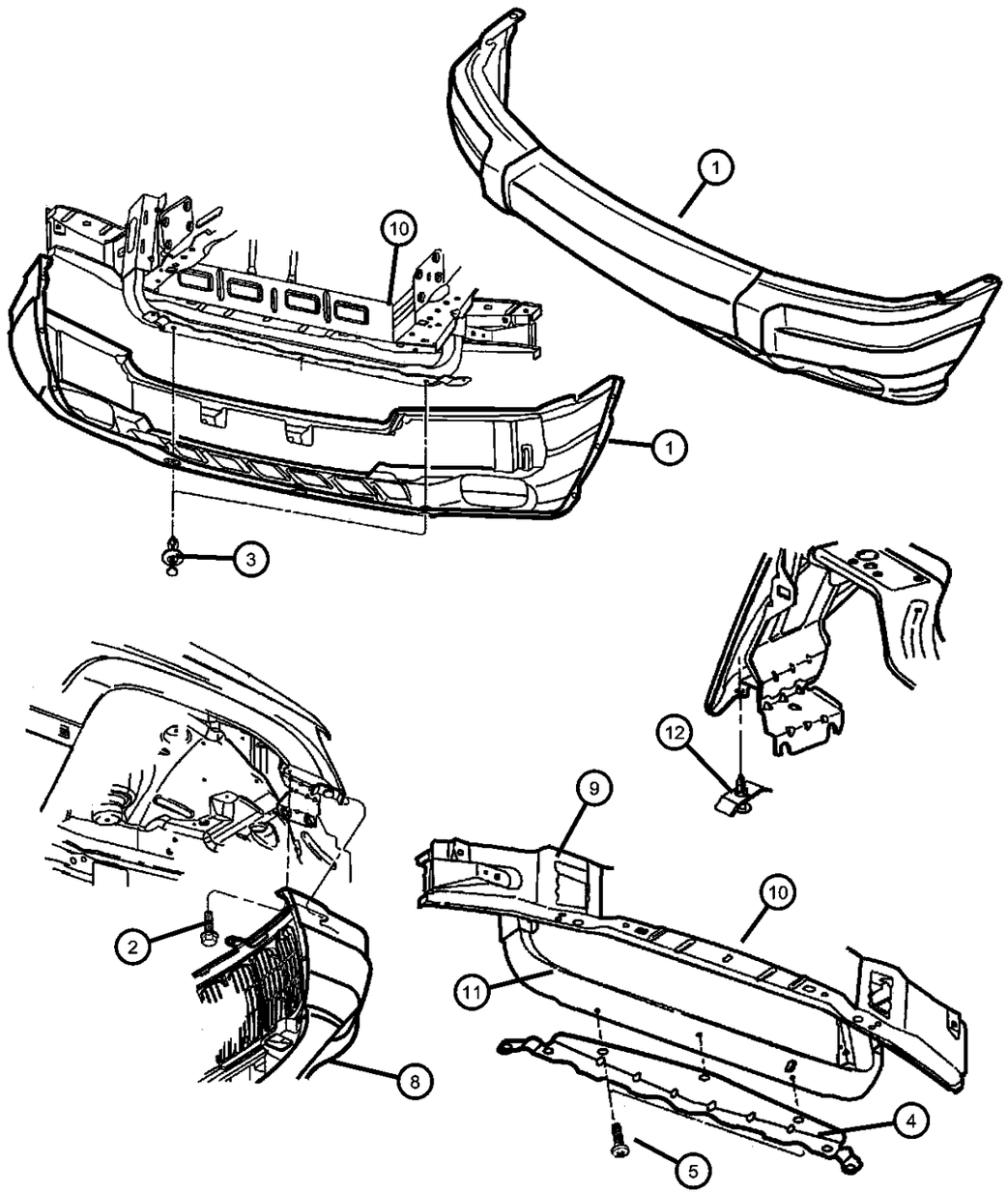

ITEM	PART NUMBER	QTY	LINE	SERIES	BODY	ENGINE	TRANS	TRIM	DESCRIPTION
		1		H					[DR] [After 8-2-01] With Fog Lamps [LNJ]
		1		H					[FF] [After 5-1-02] With Fog Lamps [LNJ]
		1		H					[RV][After 8-2-01] With Fog Lamps [LNJ]
		1		M					[DR] [After 8-2-01] With Fog Lamps [LNJ]
		1		M					[EL] [After 8-2-01] With Fog Lamps [LNJ]
		1		M					[FF] [After 5-1-02] With Fog Lamps [LNJ]
		1		M					[RV][After 8-2-01] With Fog Lamps [LNJ]
		1		M					[S5] [After 8-2-01] With Fog Lamps [LNJ]
		1		M					[UB] [After 8-2-01] With Fog Lamps [LNJ]
		1		M					[W1] [After 8-2-01] With Fog Lamps [LNJ]
	5FN29XS9AB	1		H					[BQ] [After 8-2-01] With Fog Lamps [LNJ]
		1		H					[BT] [After 8-2-01] With Fog Lamps [LNJ]
		1		H					[JR] [After 8-2-01] With Fog Lamps [LNJ]
		1		H					[SB] [After 1-1-02] With Fog Lamps [LNJ]
		1		H					[XR] [After 3-1-02] With Fog Lamps [LNJ]
		1		H					[X8] [After 8-2-01] With Fog Lamps [LNJ]
		1		M					[BQ] [After 8-2-01] With Fog Lamps [LNJ]
		1		M					[BT] [After 8-2-01] With Fog Lamps [LNJ]
		1		M					[JR] [After 8-2-01] With Fog Lamps [LNJ]
		1		M					[SB] [After 1-1-02] With Fog Lamps [LNJ]
		1		M					[XR] [After 3-1-02] With Fog Lamps [LNJ]
		1		M					[X8] [After 8-2-01] With Fog Lamps [LNJ]
		1		H					[Up to 8-2-01] With Fog Lamps, [BQ,BT,JR,X8,DR,EL,RV,S5,UB,W1]

GRAND CHEROKEE (WJ)

SERIES	LINE	BODY	ENGINE	TRANSMISSION
H = Laredo	T = JEEP - 2WD	74 = SPORT UTILITY 4-DR	ERH = Engine - 4.0L Power Tech I-6	DGK = 4 Speed Auto, 42RE
M = Sport	J = JEEP - 4WD		EVA = Engine- 4.7L V8 MPI	DGQ = 5 Speed Auto, 45RFE
P = Limited	U = JEEP - 4WD (RHD)		EVC = Engine - 4.7L HO V8 MPI	DG0 = All Automatic Transmissions
S = Overland			ER0 = All 4.0L 6 Cyl. Gas	
			EV0 = All 4.7L Gas	

Bumper, Front
Figure 13-240

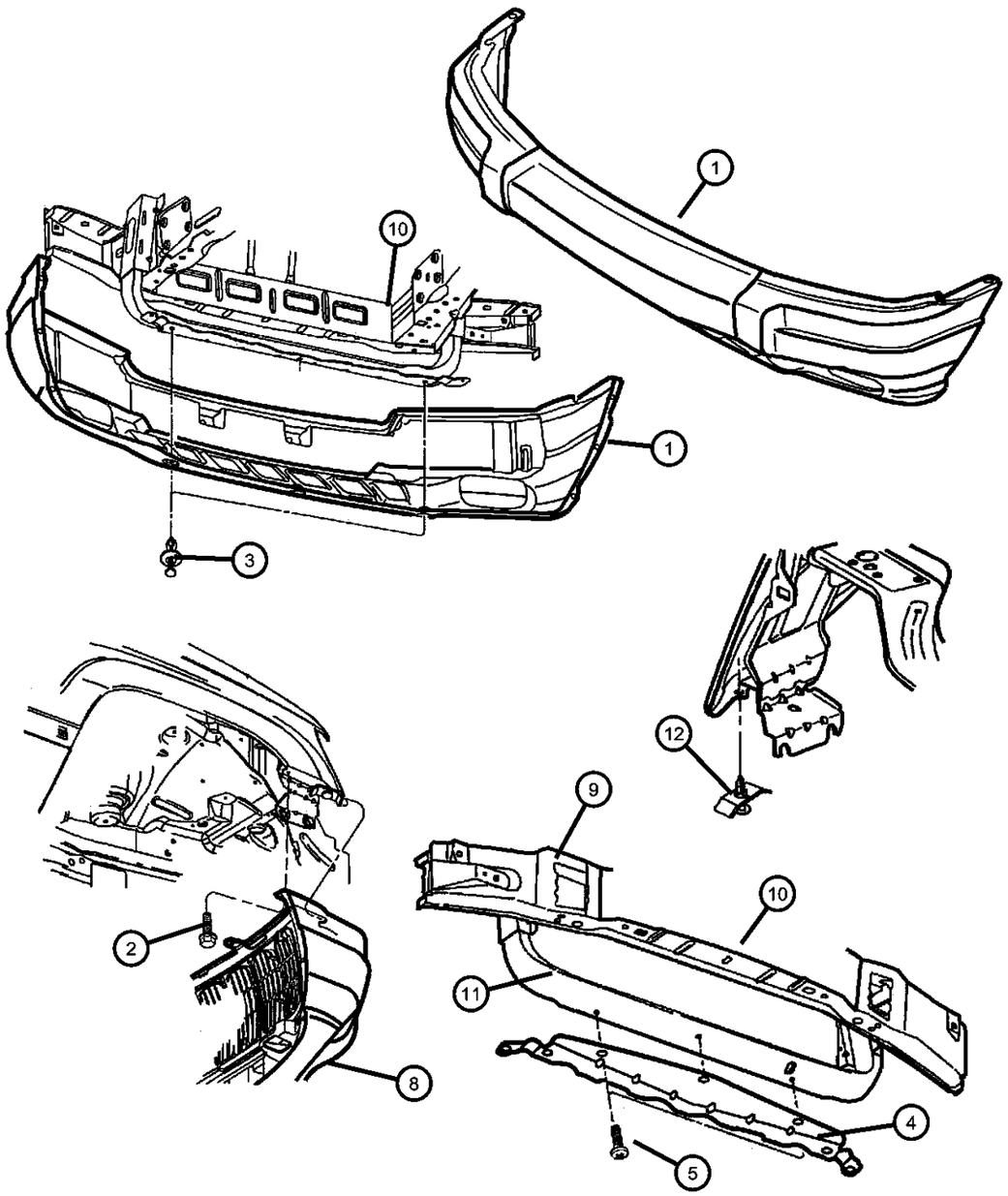

ITEM	PART NUMBER	QTY	LINE	SERIES	BODY	ENGINE	TRANS	TRIM	DESCRIPTION
		1		M					[Up to 8-2-01] With Fog Lamps, [BQ,BT,JR,X8,DR,EL,RV,S5,UB,W1
2	06505813AA	2							SCREW, Hex Flange Head
3	55176248	3							PIN, Push
4	55296138AA	1							BRACKET, Fascia
5	55296138AA	1							SCREW, M6x1.00x15.00, (NOT SERVICED)
-6	55296138AA	1							SCREW, (NOT SERVICED)
-7	06505813AA	2							SCREW, Hex Flange Head
8	55155750AA	1							LICENSE PLATE KIT
9	55135880	1							CROSSMEMBER, Radiator, Front Lower Front
10	55136113AD	1							CROSSMEMBER, Radiator
11	55135870AD	1							CROSSMEMBER, Radiator
12	06505361AA	2							PIN, Push
-13	55155165	1		H					ABSORBER, Front Energy
-14	55155505	1		P					ABSORBER, Front Energy, Limited
-15	06505667AA	4							PIN, Deflector

GRAND CHEROKEE (WJ)

SERIES	LINE	BODY	ENGINE	TRANSMISSION
H = Laredo M = Sport P = Limited S = Overland	T = JEEP - 2WD J = JEEP - 4WD U = JEEP - 4WD (RHD)	74 = SPORT UTILITY 4-DR	ERH = Engine - 4.0L Power Tech I-6 EVA = Engine- 4.7L V8 MPI EVC = Engine - 4.7L HO V8 MPI ER0 = All 4.0L 6 Cyl. Gas EV0 = All 4.7L Gas	DGK = 4 Speed Auto, 42RE DGQ = 5 Speed Auto, 45RFE DG0 = All Automatic Transmissions

Bumper, Rear
Figure 13-340

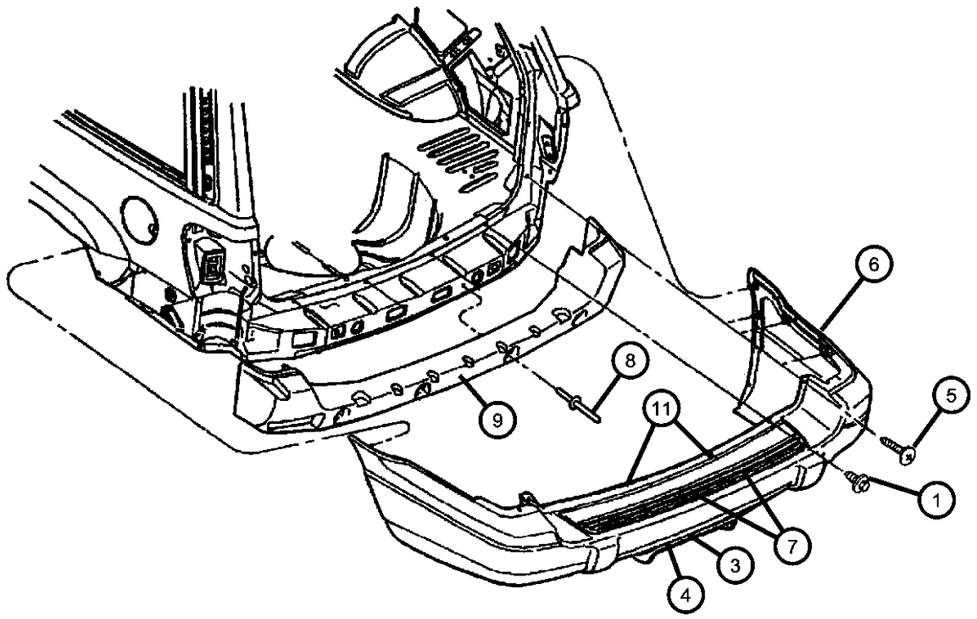

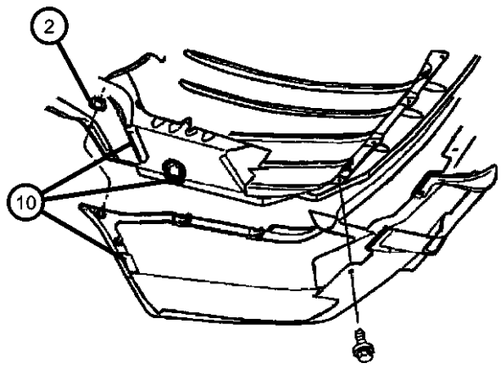

ITEM	PART NUMBER	QTY	LINE	SERIES	BODY	ENGINE	TRANS	TRIM	DESCRIPTION
1	55176248	3							PIN, Push
2	55176248	3							NUT AND WASHER, Hex, M6x1.0, (NOT SERVICED)
3	34201631	6							RIVET, M6.25x28 Black
4	06505813AA	2							SCREW, Hex Flange Head
5	06035412	1							SCREW
6									FASCIA, Rear
	05012804AA	1		S					[PAR] Without Trailer Tow [AHT,AHX]
		1		P					[PAR] Without Trailer Tow [AHT,AHX]
		1		H					[PAR] Without Trailer Tow [AHT,AHX] With [ALZ]
	05012936AA	1		P					[PAR] With Trailer Tow [AHT,AHX]
		1		S					[PAR] With Trailer Tow [AHT,AHX]
		1		H					[PAR] With Trailer Tow [AHT,AHX] With [ALZ]
	0TK66VF7AA	1		M					[DR] [After 8-2-01] With Trailor Tow [AHT,AHX]
		1		M					[EL] [After 8-2-01] With Trailor Tow [AHT,AHX]
		1		M					[FF] [After 5-1-02] With Trailor Tow [AHT,AHX]
		1		M					[S5] [After 8-2-01] With Trailor Tow [AHT,AHX]
		1		M					[UB] [After 8-2-01] With Trailor Tow [AHT,AHX]
		1		M					[W1] [After 8-2-01] With Trailor Tow [AHT,AHX]
		1		H					[DR] [After 8-2-01] With Trailor Tow [AHT,AHX]
		1		H					[EL] [After 8-2-01] With Trailor Tow [AHT,AHX]
		1		H					[FF] [After 5-1-02] With Trailor Tow [AHT,AHX]
		1		M					[RV] [After 8-2-01] With Trailor Tow [AHT,AHX]
		1		H					[RV] [After 8-2-01] With Trailor Tow [AHT,AHX]
		1		H					[S5] [After 8-2-01] With Trailor Tow [AHT,AHX]
		1		H					[UB] [After 8-2-01] With Trailor Tow [AHT,AHX]

GRAND CHEROKEE (WJ)

SERIES	LINE	BODY	ENGINE	TRANSMISSION
H = Laredo M = Sport P = Limited S = Overland	T = JEEP - 2WD J = JEEP - 4WD U = JEEP - 4WD (RHD)	74 = SPORT UTILITY 4-DR	ERH = Engine - 4.0L Power Tech I-6 EVA = Engine- 4.7L V8 MPI EVC = Engine - 4.7L HO V8 MPI ER0 = All 4.0L 6 Cyl. Gas EV0 = All 4.7L Gas	DGK = 4 Speed Auto, 42RE DGQ = 5 Speed Auto, 45RFE DG0 = All Automatic Transmissions

Bumper, Rear
Figure 13-340

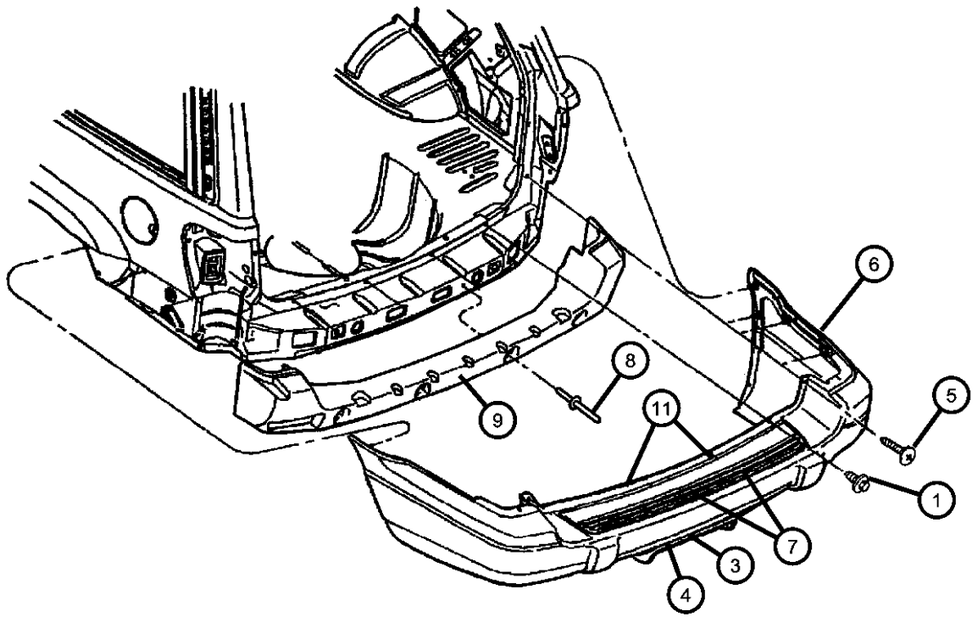

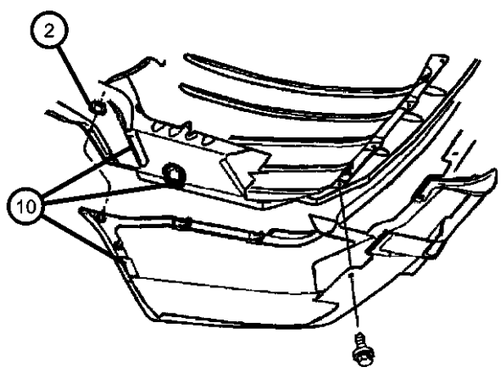

ITEM	PART NUMBER	QTY	LINE	SERIES	BODY	ENGINE	TRANS	TRIM	DESCRIPTION
		1		H					[W1] [After 8-2-01] With Trailor Tow [AHT,AHX]
	0TK66XS9AA	1		M					[BQ] [After 8-2-01] With Trailor Tow [AHT,AHX]
		1		M					[BT] [After 8-2-01] With Trailor Tow [AHT,AHX]
		1		M					[SB] [After 1-1-02] With Trailor Tow [AHT,AHX]
		1		M					[XR] [After 3-1-02] With Trailor Tow [AHT,AHX]
		1		M					[X8] [After 8-2-01] With Trailor Tow [AHT,AHX]
		1		H					[Up to 8-2-01] With Trailer Tow, [BQ,BT,JR,X8,DR,EL,RV,S5,UB,W1
		1		H					[SB] [After 1-1-02] With Trailor Tow [AHT,AHX]
		1		H					[XR] [After 3-1-02] With Trailor Tow [AHT,AHX]
		1		M					[JR] [After 8-2-01] With Trailor Tow [AHT,AHX]
		1		M					[Up to 8-2-01] With Trailer Tow, [BQ,BT,JR,X8,DR,EL,RV,S5,UB,W1
	0TK66XS9AB	1		H					[X8] [After 8-2-01] With Trailor Tow [AHT,AHX]
		1		H					[BQ] [After 8-2-01] With Trailor Tow [AHT,AHX]
		1		H					[BT] [After 8-2-01] With Trailor Tow [AHT,AHX]
		1		H					[JR] [After 8-2-01] With Trailor Tow [AHT,AHX]
	5EU81VF7AB	1		H					[EL] [After 8-2-01] Without Trailor Tow [AHT,AHX]
		1		M					[DR] [After 8-2-01] Without Trailor Tow [AHT,AHX]
		1		H					[S5] [After 8-2-01] Without Trailor Tow [AHT,AHX]
		1		H					[UB] [After 8-2-01] Without Trailor Tow [AHT,AHX]
		1		H					[W1] [After 8-2-01] Without Trailor Tow [AHT,AHX]
		1		H					[DR] [After 8-2-01] Without Trailor Tow [AHT,AHX]
		1		H					[FF] [After 5-1-02] Without Trailor Tow [AHT,AHX]
		1		H					[RV] [After 8-2-01] Without Trailor Tow [AHT,AHX]

GRAND CHEROKEE (WJ)

SERIES	LINE	BODY	ENGINE	TRANSMISSION
H = Laredo M = Sport P = Limited S = Overland	T = JEEP - 2WD J = JEEP - 4WD U = JEEP - 4WD (RHD)	74 = SPORT UTILITY 4-DR	ERH = Engine - 4.0L Power Tech I-6 EVA = Engine- 4.7L V8 MPI EVC = Engine - 4.7L HO V8 MPI ER0 = All 4.0L 6 Cyl. Gas EV0 = All 4.7L Gas	DGK = 4 Speed Auto, 42RE DGQ = 5 Speed Auto, 45RFE DG0 = All Automatic Transmissions

Bumper, Rear
Figure 13-340

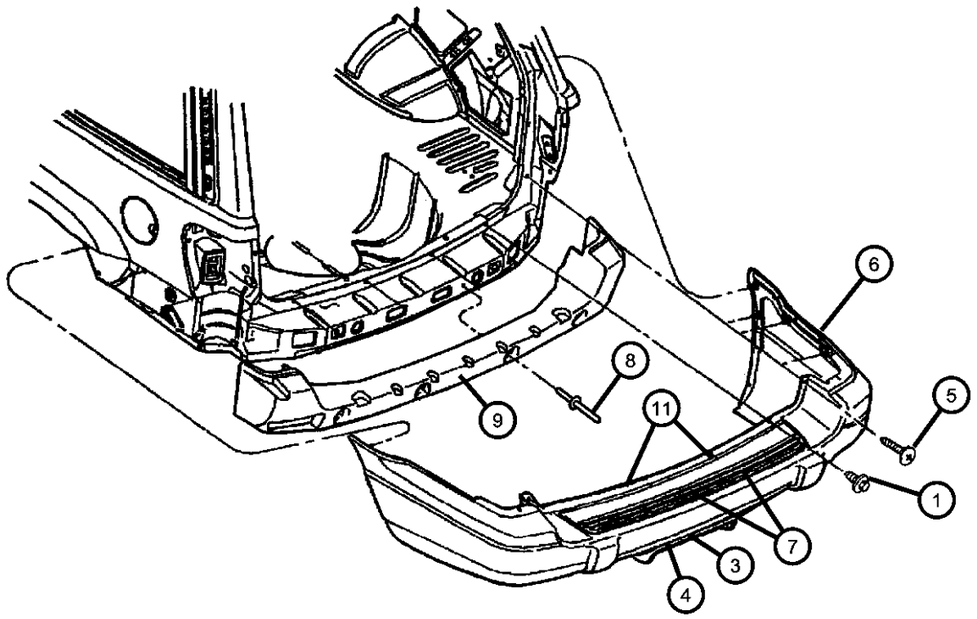

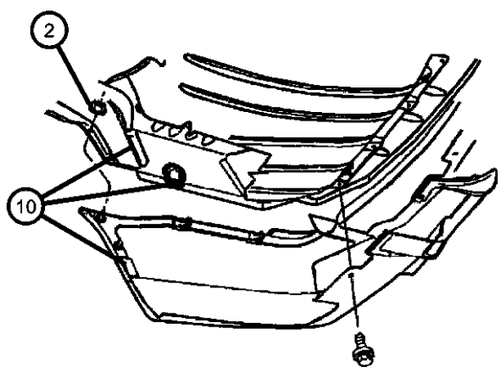

ITEM	PART NUMBER	QTY	LINE	SERIES	BODY	ENGINE	TRANS	TRIM	DESCRIPTION
		1		M					[EL] [After 8-2-01] Without Trailor Tow [AHT,AHX]
		1		M					[FF] [After 5-1-02] Without Trailor Tow [AHT,AHX]
		1		M					[RV] [After 8-2-01] Without Trailor Tow [AHT,AHX]
		1		M					[S5] [After 8-2-01] Without Trailor Tow [AHT,AHX]
		1		M					[UB] [After 8-2-01] Without Trailor Tow [AHT,AHX]
		1		M					[W1] [After 8-2-01] Without Trailor Tow [AHT,AHX]
	5EU81XS9AB	1		H					[Up to 8-2-01] Without Trailer Tow, [BQ,BT,JR,X8,DR,EL,RV,S5,UB,W1
		1		M					[SB] [After 1-1-02] Without Trailor Tow [AHT,AHX]
		1		H					[BQ] [After 8-2-01] Without Trailor Tow [AHT,AHX]
		1		H					[BT] [After 8-2-01] Without Trailor Tow [AHT,AHX]
		1		H					[JR] [After 8-2-01] Without Trailor Tow [AHT,AHX]
		1		H					[SB] [After 1-1-02] Without Trailor Tow [AHT,AHX]
		1		H					[XR] [After 3-1-02] Without Trailor Tow [AHT,AHX]
		1		H					[X8] [After 8-2-01] Without Trailor Tow [AHT,AHX]
		1		M					[BQ] [After 8-2-01] Without Trailor Tow [AHT,AHX]
		1		M					[BT] [After 8-2-01] Without Trailor Tow [AHT,AHX]
		1		M					[JR] [After 8-2-01] Without Trailor Tow [AHT,AHX]
		1		M					[XR] [After 3-1-02] Without Trailor Tow [AHT,AHX]
		1		M					[X8] [After 8-2-01] Without Trailor Tow [AHT,AHX]
7									STEP PAD PACKAGE, Rear Fascia
	0WC12DX9AA	1		P					Black
		1		S					Black
		1		H					Black

GRAND CHEROKEE (WJ)

SERIES	LINE	BODY	ENGINE	TRANSMISSION
H = Laredo M = Sport P = Limited S = Overland	T = JEEP - 2WD J = JEEP - 4WD U = JEEP - 4WD (RHD)	74 = SPORT UTILITY 4-DR	ERH = Engine - 4.0L Power Tech I-6 EVA = Engine- 4.7L V8 MPI EVC = Engine - 4.7L HO V8 MPI ER0 = All 4.0L 6 Cyl. Gas EV0 = All 4.7L Gas	DGK = 4 Speed Auto, 42RE DGQ = 5 Speed Auto, 45RFE DG0 = All Automatic Transmissions

Bumper, Rear
Figure 13-340

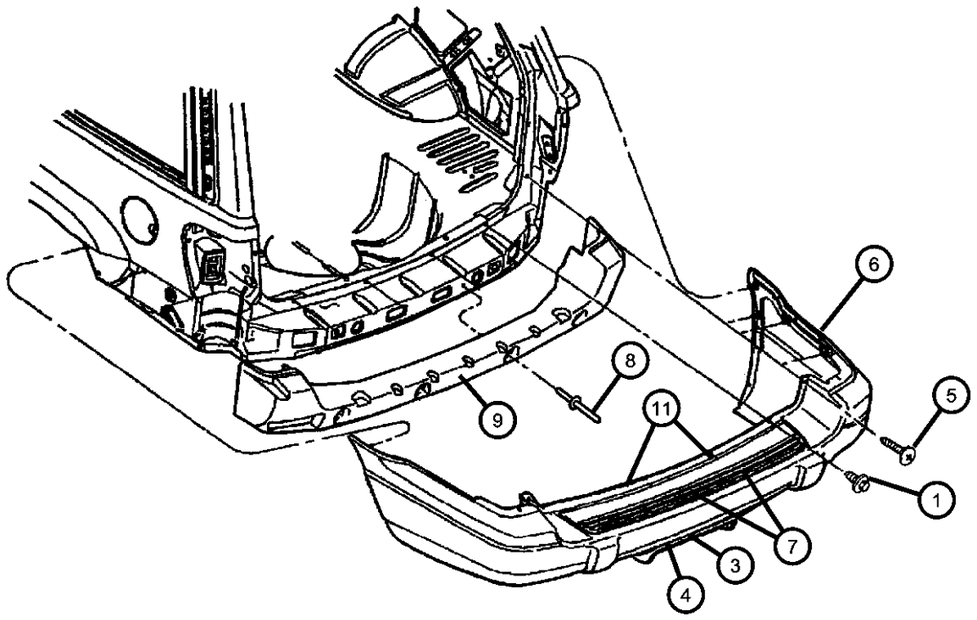

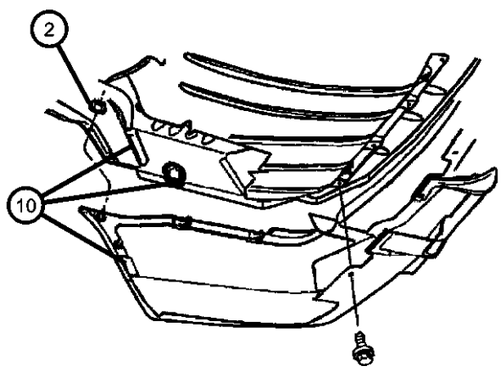

ITEM	PART NUMBER	QTY	LINE	SERIES	BODY	ENGINE	TRANS	TRIM	DESCRIPTION
		1		M					Black
	0WC12VF7AA	1		H					Driftwood
		1		P					Driftwood
		1		M					Driftwood
8		1							RIVET, (NOT SERVICED),
9									ABSORBER, Rear Energy
	55155166	1		H, M					Laredo
	55155506	1		P, S					Limited And Overland
10									RETAINER PACKAGE, Fascia
	05015522AB	1		P					Limited, Right
		1		H					Laredo, Right
	05015523AB	1		P					Limited, Left
		1		H					Laredo, Left
11	06503106	8							RETAINER, Push In Type M6.3 Hole
12									BEZEL, Hitch
	5FY07DX9AA	1		P					[BQ,BT,DR,EL,FF,JR,RV,S5,SB,UB,
		1		S					[DR,EL,JR,S5,DR,EL,JR,S5]
		1		H					[BQ,BT,XR,W1,UB,SB,RV,JR,EL,DR
	5FY10VF7AA	1		H					[DR,EL,FF,RV,S5,U5,W1]
		1		M					[DR,EL,FF,RV,S5,U5,W1]
	5FY10XS9AA	1		H					[BQ,BT,JR,SB,X8,XR]
	5FY10YR8AA	1		H					[RV], With [ADX] Speacial Appearance Group
		1		M					[RV]
		1		M					[BQ,BT,JR,SB,X8,XR]
	5FY10YBMAA	1		H					[BQ,BT], With [ADX] Speacial Appearance Group

GRAND CHEROKEE (WJ)

SERIES	LINE	BODY	ENGINE	TRANSMISSION
H = Laredo M = Sport P = Limited S = Overland	T = JEEP - 2WD J = JEEP - 4WD U = JEEP - 4WD (RHD)	74 = SPORT UTILITY 4-DR	ERH = Engine - 4.0L Power Tech I-6 EVA = Engine- 4.7L V8 MPI EVC = Engine - 4.7L HO V8 MPI ER0 = All 4.0L 6 Cyl. Gas EV0 = All 4.7L Gas	DGK = 4 Speed Auto, 42RE DGQ = 5 Speed Auto, 45RFE DG0 = All Automatic Transmissions

Tow Eye
Figure 13-610

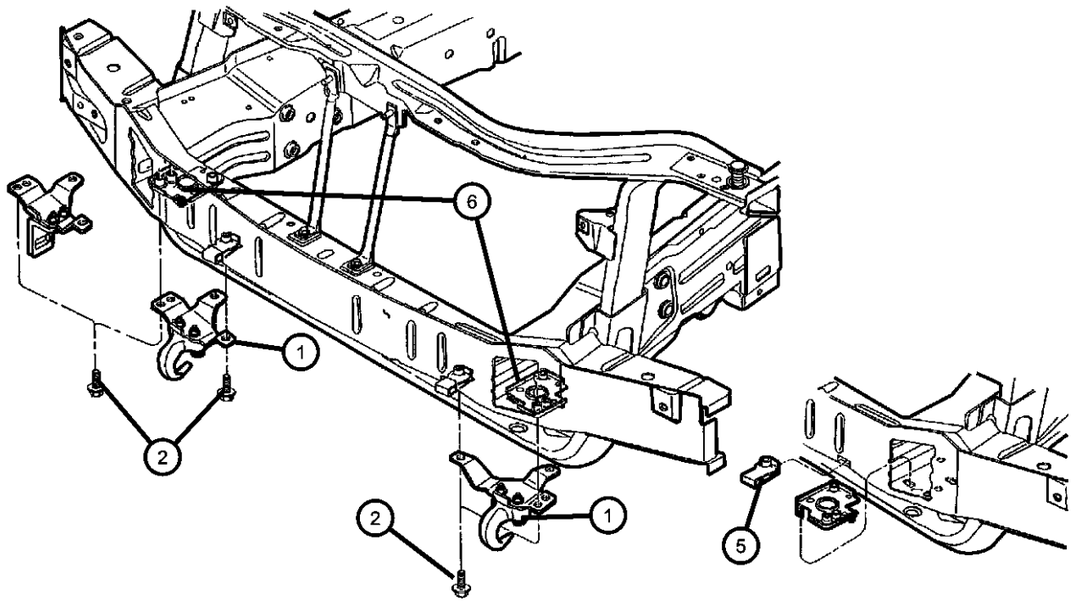

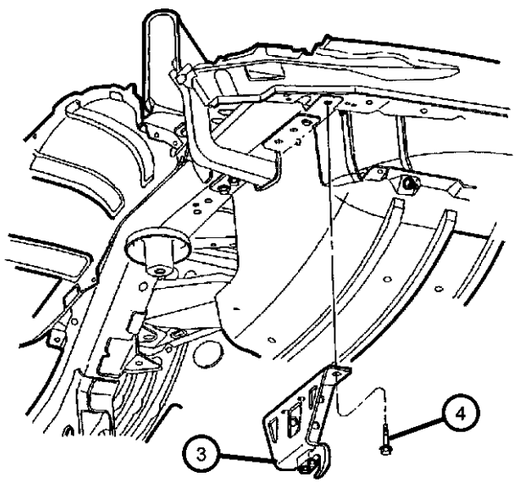

ITEM	PART NUMBER	QTY	LINE	SERIES	BODY	ENGINE	TRANS	TRIM	DESCRIPTION
1									HOOK, Tow
	52059415AA	1							Chrome, Left Front
	52059416AA	1							Chrome, Right Front
2	06101102	7							BOLT, Hex Head, M12x1.75x45
3									HOOK, Tow
	52059415AA	1							Chrome, Left Front
	52059416AA	1							Chrome, Right Front
4	52059416AA	1							SCREW AND WASHER, M10x1.50x35, (NOT SERVICED),
5	06504818AA	2							NUT, M10x1.50
6									TAPPING PLATE, Tow Hook
	52059156AA	1							Right
	52059157AA	1							Left

GRAND CHEROKEE (WJ)

SERIES	LINE	BODY	ENGINE	TRANSMISSION
H = Laredo	T = JEEP - 2WD	74 = SPORT UTILITY 4-DR	ERH = Engine - 4.0L Power Tech I-6	DGK = 4 Speed Auto, 42RE
M = Sport	J = JEEP - 4WD		EVA = Engine- 4.7L V8 MPI	DGQ = 5 Speed Auto, 45RFE
P = Limited	U = JEEP - 4WD (RHD)		EVC = Engine - 4.7L HO V8 MPI	DG0 = All Automatic Transmissions
S = Overland			ER0 = All 4.0L 6 Cyl. Gas	
			EV0 = All 4.7L Gas	

Rear Hitch
Figure 13-620

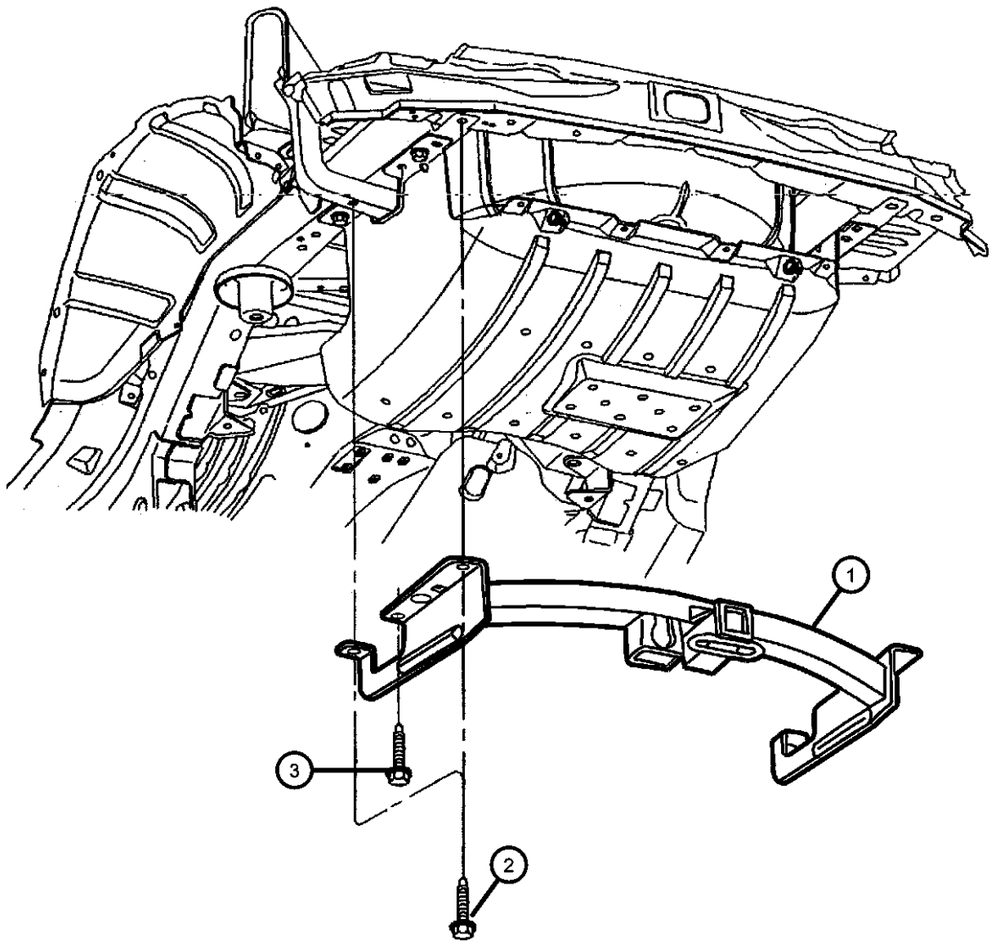

ITEM	PART NUMBER	QTY	LINE	SERIES	BODY	ENGINE	TRANS	TRIM	DESCRIPTION
1	82206837	1	J, T	H, P	74				RECEIVER KIT, Trailer Tow
2	06101102	7							BOLT, Hex Head, M12x1.75x45
3	06503571	4							SCREW AND WASHER, M10x1.50x35
-4	52059238AA	1							BRACE, Tow Hook

GRAND CHEROKEE (WJ)

SERIES	LINE	BODY	ENGINE	TRANSMISSION
H = Laredo M = Sport P = Limited S = Overland	T = JEEP - 2WD J = JEEP - 4WD U = JEEP - 4WD (RHD)	74 = SPORT UTILITY 4-DR	ERH = Engine - 4.0L Power Tech I-6 EVA = Engine- 4.7L V8 MPI EVC = Engine - 4.7L HO V8 MPI ER0 = All 4.0L 6 Cyl. Gas EV0 = All 4.7L Gas	DGK = 4 Speed Auto, 42RE DGQ = 5 Speed Auto, 45RFE DG0 = All Automatic Transmissions

Group - 14

Fuel

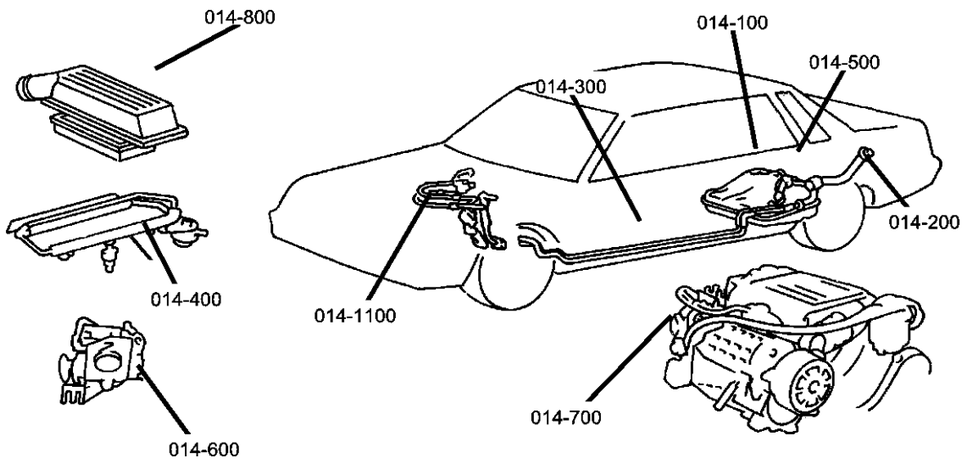

014-100 Tank, Fuel 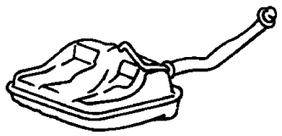	**014-1000** Speed Control 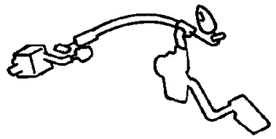	**014-1100** Accelerator Pedal 	**014-200** Fuel Tank Filler Tube 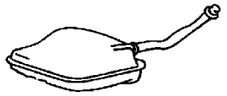
014-300 Fuel Lines 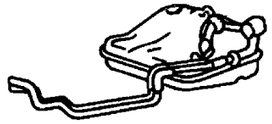	**014-400** Fuel Rail 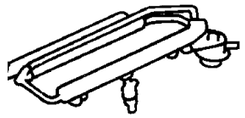	**014-500** Fuel Pump and Sending Unit 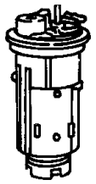	**014-600** Throttle Body
014-700 Throttle Controls 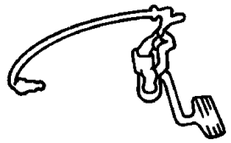	**014-800** Air Cleaner 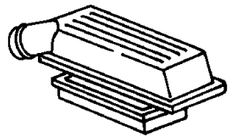	**014-900** Air Intake System 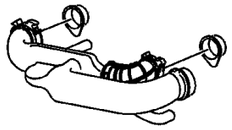	

Group - 14 Fuel

Illustration Title — Group-Fig. No.

Tank, Fuel
Fuel Tank, 4.0 [ERH], 4.7 [EVA, EVC] ..... Fig. 14 - 110

Fuel Tank Filler Tube
Fuel Tank Filler Tube, 4.0 [ERH], 4.7 [EVA, EVC] ..... Fig. 14 - 210

Fuel Lines
Fuel Lines, Front, 4.0 [ERH] ..... Fig. 14 - 310
Fuel Lines, Rear, 4.0 [ERH] ..... Fig. 14 - 320
Fuel Lines, Front, 4.7 [EVA, EVC] ..... Fig. 14 - 330
Fuel Lines, Rear, 4.7 [EVA, EVC] ..... Fig. 14 - 340

Fuel Rail
Fuel Rail, 4.0 [ERH], 4.7 [EVA, EVC] ..... Fig. 14 - 410

Fuel Pump and Sending Unit
Fuel Pump and Sending Unit, 4.0 [ERH], 4.7 [EVA, EVC] ..... Fig. 14 - 510

Throttle Body
Throttle Body, 4.0 [ERH], 4.7 [EVA, EVC] ..... Fig. 14 - 610

Throttle Controls
Throttle Controls, 4.0 [ERH] ..... Fig. 14 - 710
Throttle Controls, 4.7 [EVA, EVC] ..... Fig. 14 - 720

Air Cleaner
Air Cleaner, 4.0 [ERH] ..... Fig. 14 - 810
Air Cleaner, 4.7 [EVA, EVC] ..... Fig. 14 - 820

Air Intake System
Air Intake System, 4.0L [ERH], 4.7L [EVA] ..... Fig. 14 - 910

Speed Control
Speed Control, 4.0 [ERH], 4.7 [EVA, EVC] ..... Fig. 14 - 1010

Accelerator Pedal
Accelerator Pedal, 4.0 [ERH], 4.7 [EVA, EVC] ..... Fig. 14 - 1110
Pedal Brake, Power Adjustable ..... Fig. 14 - 1120

Fuel Tank, 4.0 [ERH], 4.7 [EVA, EVC]
Figure 14-110

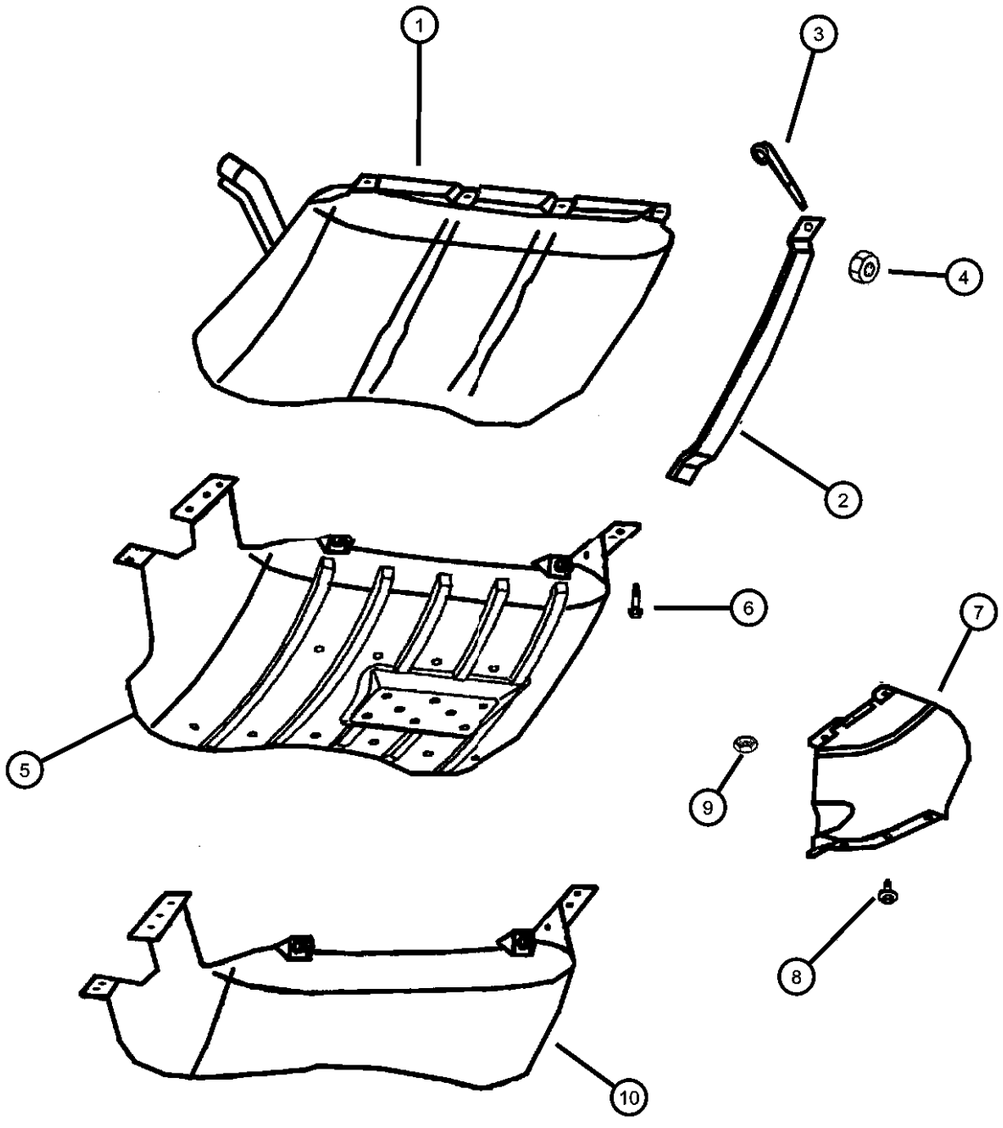

ITEM	PART NUMBER	QTY	LINE	SERIES	BODY	ENGINE	TRANS	TRIM	DESCRIPTION
Note; Sales Codes [XEE]= Fuel Tank Skid Plate									
1	52100427AB	1							TANK, Fuel
2									STRAP, Fuel Tank
	52080141AA	1							Front Left
	52080142AA	2							Left/Right Rear With Hitch
	52080143AA	1							Rear Strap Without/Hitch
	52100216	2							
3	06504171	2							SCREW, Hex Flange Head, M8x1.25x32
4	06100517	2							NUT, Hex Flange Lock, M8 Phosphate
5	52100376AD	1							SKID PLATE, Fuel Tank, With Sales Code [XEE]
6	06101102	7							BOLT, Hex Head, M12x1.75x45
7	55136160AE	1							SHIELD, Fuel Tank
8	34201631	6							RIVET, M6.25x28 Black
9	34201631	6							NUT, Heat Shield Attach, (NOT SERVICED)
10	34201631	6							GUARD, Brush, Fuel Tank, Serviced in Item#5, (NOT SERVICED)
-11	52098655AC	1							HOSE, Axle Vent

GRAND CHEROKEE (WJ)

SERIES	LINE	BODY	ENGINE	TRANSMISSION
H = Laredo M = Sport P = Limited S = Overland	T = JEEP - 2WD J = JEEP - 4WD U = JEEP - 4WD (RHD)	74 = SPORT UTILITY 4-DR	ERH = Engine - 4.0L Power Tech I-6 EVA = Engine- 4.7L V8 MPI EVC = Engine - 4.7L HO V8 MPI ER0 = All 4.0L 6 Cyl. Gas EV0 = All 4.7L Gas	DGK = 4 Speed Auto, 42RE DGQ = 5 Speed Auto, 45RFE DG0 = All Automatic Transmissions

Fuel Tank Filler Tube, 4.0 [ERH], 4.7 [EVA, EVC]
Figure 14-210

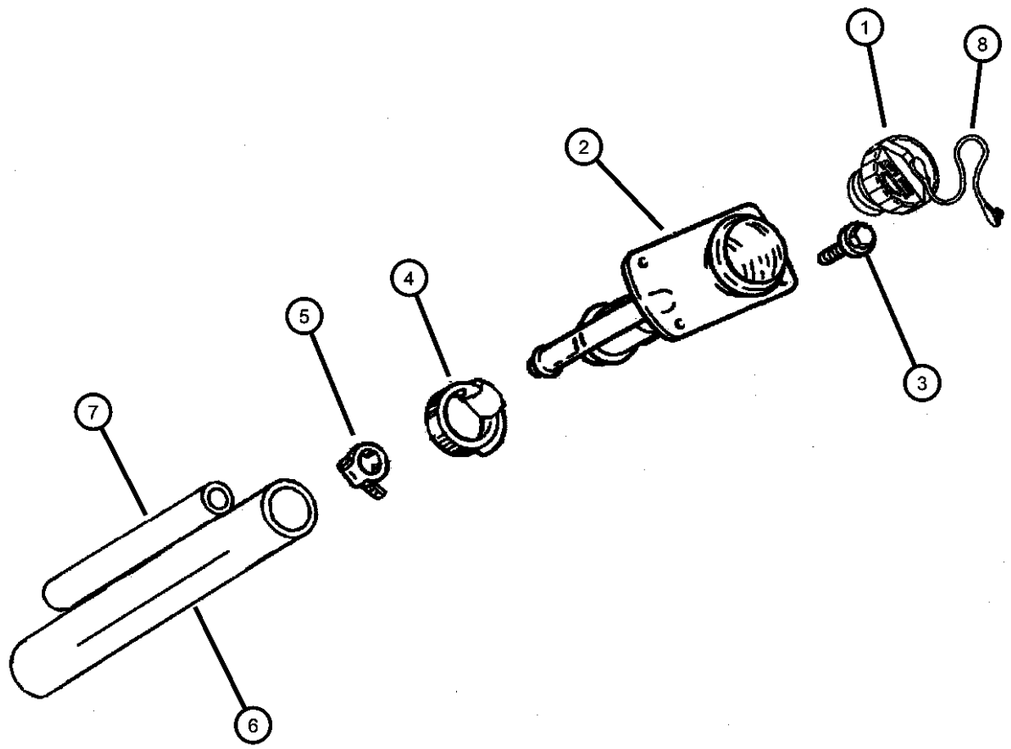

ITEM	PART NUMBER	QTY	LINE	SERIES	BODY	ENGINE	TRANS	TRIM	DESCRIPTION
Note; Sales Codes [ER0]= All 4.0L, 6 Cylinder Gas Engines [EV0]= All 4.7L V-8 Gas Engines									
1	52080289AA	1							CAP, Fuel Filler
2	52100830AC	1				ER0, EV0			TUBE, Fuel Filler
3	00154236	3							SCREW, Stake, .19-24
4	00154236	3							CLAMP, Hose, (NOT SERVICED)
5	06505322AA	1							CLAMP, Hose
6	52100506AA	1							HOSE, Fuel Filler
7	52100506AA	1							HOSE, Fuel Tank Vent, (NOT SERVICED)
8	04682676	1							TETHER, Fuel Filler Cap

GRAND CHEROKEE (WJ)

SERIES	LINE	BODY	ENGINE	TRANSMISSION
H = Laredo M = Sport P = Limited S = Overland	T = JEEP - 2WD J = JEEP - 4WD U = JEEP - 4WD (RHD)	74 = SPORT UTILITY 4-DR	ERH = Engine - 4.0L Power Tech I-6 EVA = Engine- 4.7L V8 MPI EVC = Engine - 4.7L HO V8 MPI ER0 = All 4.0L 6 Cyl. Gas EV0 = All 4.7L Gas	DGK = 4 Speed Auto, 42RE DGQ = 5 Speed Auto, 45RFE DG0 = All Automatic Transmissions

Fuel Lines, Front, 4.0 [ERH]
Figure 14-310

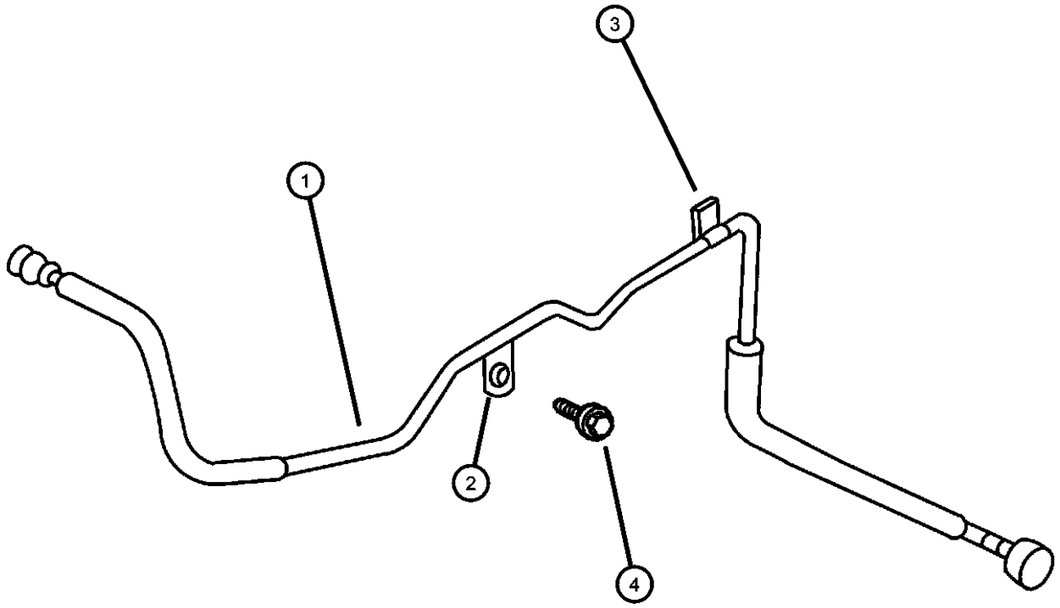

ITEM	PART NUMBER	QTY	LINE	SERIES	BODY	ENGINE	TRANS	TRIM	DESCRIPTION
Note; Sales Codes [ER0]= All 4.0L Gas Engines									
1	52100041AH	1				ER0			BUNDLE, Fuel Line
2	52100415AB	1				ER0			BRACKET, Fuel Line
3	52100482AA	1				ER0			BRACKET, Fuel Line
4	06501979	1				ER0			SCREW AND WASHER, Hex Head, M6x1x17

GRAND CHEROKEE (WJ)

SERIES	LINE	BODY	ENGINE	TRANSMISSION
H = Laredo M = Sport P = Limited S = Overland	T = JEEP - 2WD J = JEEP - 4WD U = JEEP - 4WD (RHD)	74 = SPORT UTILITY 4-DR	ERH = Engine - 4.0L Power Tech I-6 EVA = Engine- 4.7L V8 MPI EVC = Engine - 4.7L HO V8 MPI ER0 = All 4.0L 6 Cyl. Gas EV0 = All 4.7L Gas	DGK = 4 Speed Auto, 42RE DGQ = 5 Speed Auto, 45RFE DG0 = All Automatic Transmissions

Fuel Lines, Rear, 4.0 [ERH]
Figure 14-320

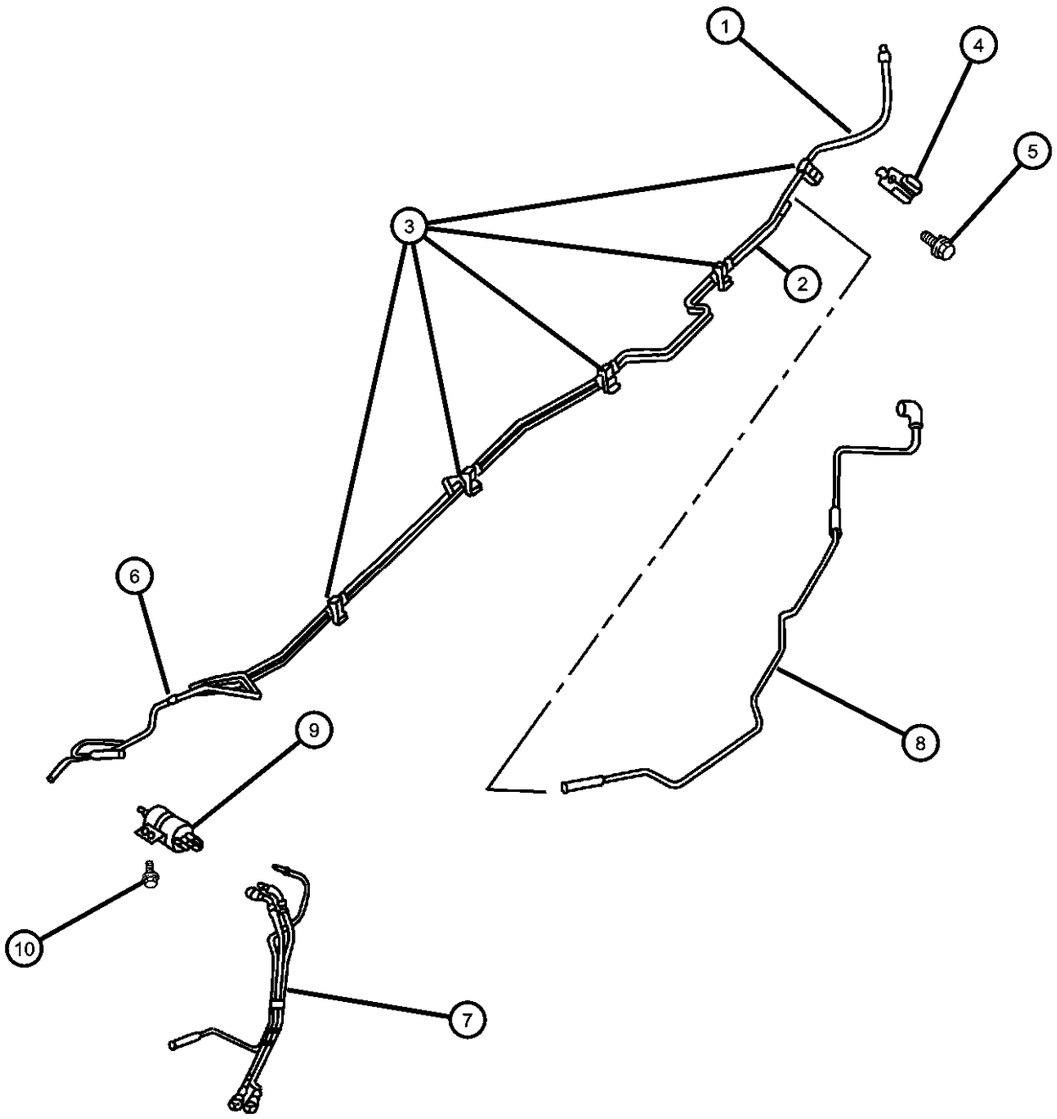

ITEM	PART NUMBER	QTY	LINE	SERIES	BODY	ENGINE	TRANS	TRIM	DESCRIPTION
Note; Sales Codes [ER0]= All 4.0L, 6 Cylinder Gas Engines [EV0]= All 4.7L V-8 Gas Engines									
1	05073516AA	1				ER0, EV0			TUBE, Fuel Supply
2	05073517AA	1				ER0, EV0			TUBE, Vacuum
3	05073519AA	6				ER0, EV0			CLIP, Fuel Bundle
4	05073520AA	1				ER0, EV0			CLIP, Fuel Bundle
5	06102132AA	1							SCREW, Hex Head, M6x1x20
6	05073521AA	1				ER0, EV0			CLIP, Fuel Bundle
7	52100196AG	1							TUBE, Fuel
8	05073518AA	1				ER0, EV0			TUBE, Fuel Vapor
9	52100283AE	1				ER0, EV0			FILTER AND REGULATOR, Fuel
10	06102132AA	2				ER0, EV0			SCREW, Hex Head, M6x1x20

GRAND CHEROKEE (WJ)

SERIES	LINE	BODY	ENGINE	TRANSMISSION
H = Laredo M = Sport P = Limited S = Overland	T = JEEP - 2WD J = JEEP - 4WD U = JEEP - 4WD (RHD)	74 = SPORT UTILITY 4-DR	ERH = Engine - 4.0L Power Tech I-6 EVA = Engine- 4.7L V8 MPI EVC = Engine - 4.7L HO V8 MPI ER0 = All 4.0L 6 Cyl. Gas EV0 = All 4.7L Gas	DGK = 4 Speed Auto, 42RE DGQ = 5 Speed Auto, 45RFE DG0 = All Automatic Transmissions

Fuel Lines, Front, 4.7 [EVA, EVC]
Figure 14-330

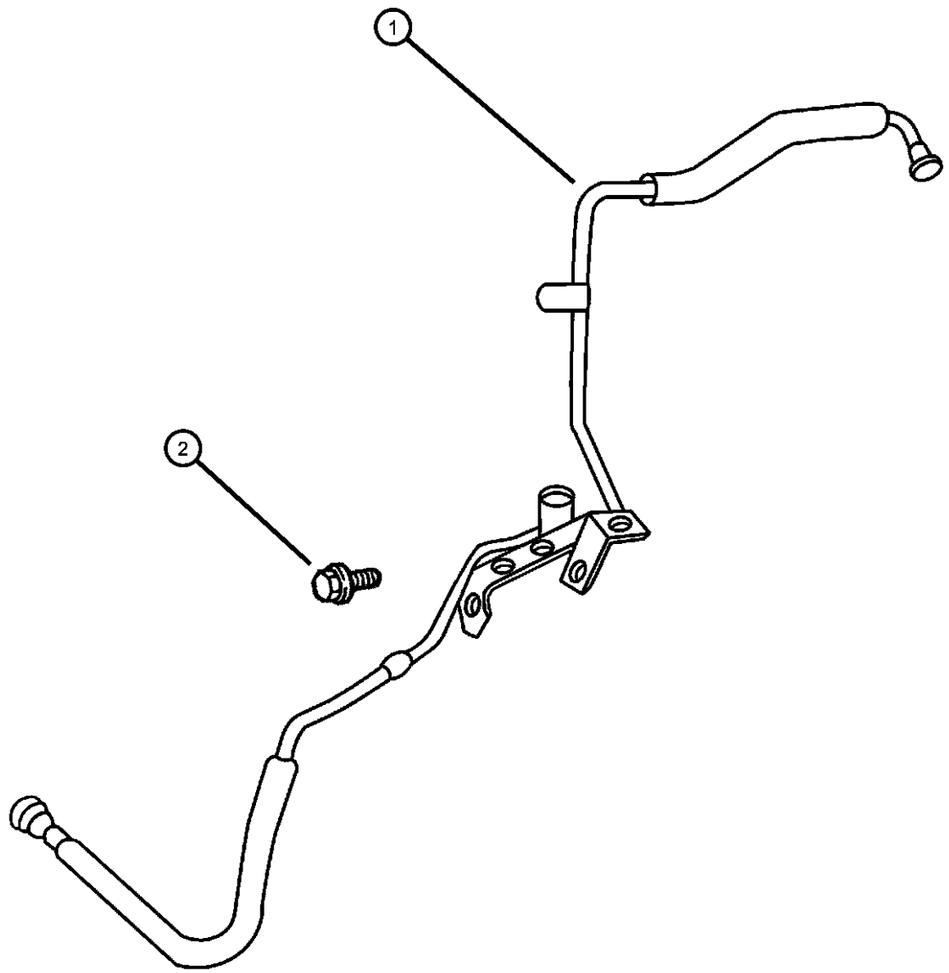

ITEM	PART NUMBER	QTY	LINE	SERIES	BODY	ENGINE	TRANS	TRIM	DESCRIPTION
Note; Sales Codes									
[EV0]= All 4.7L V-8 Gas Engines									
1	52100043AE	1				EV0			BUNDLE, Fuel Line
2	52100043AE	1							SCREW, (NOT SERVICED)

GRAND CHEROKEE (WJ)

SERIES	LINE	BODY	ENGINE	TRANSMISSION
H = Laredo	T = JEEP - 2WD	74 = SPORT UTILITY 4-DR	ERH = Engine - 4.0L Power Tech I-6	DGK = 4 Speed Auto, 42RE
M = Sport	J = JEEP - 4WD		EVA = Engine- 4.7L V8 MPI	DGQ = 5 Speed Auto, 45RFE
P = Limited	U = JEEP - 4WD (RHD)		EVC = Engine - 4.7L HO V8 MPI	DG0 = All Automatic Transmissions
S = Overland			ER0 = All 4.0L 6 Cyl. Gas	
			EV0 = All 4.7L Gas	

Fuel Lines, Rear, 4.7 [EVA, EVC]
Figure 14-340

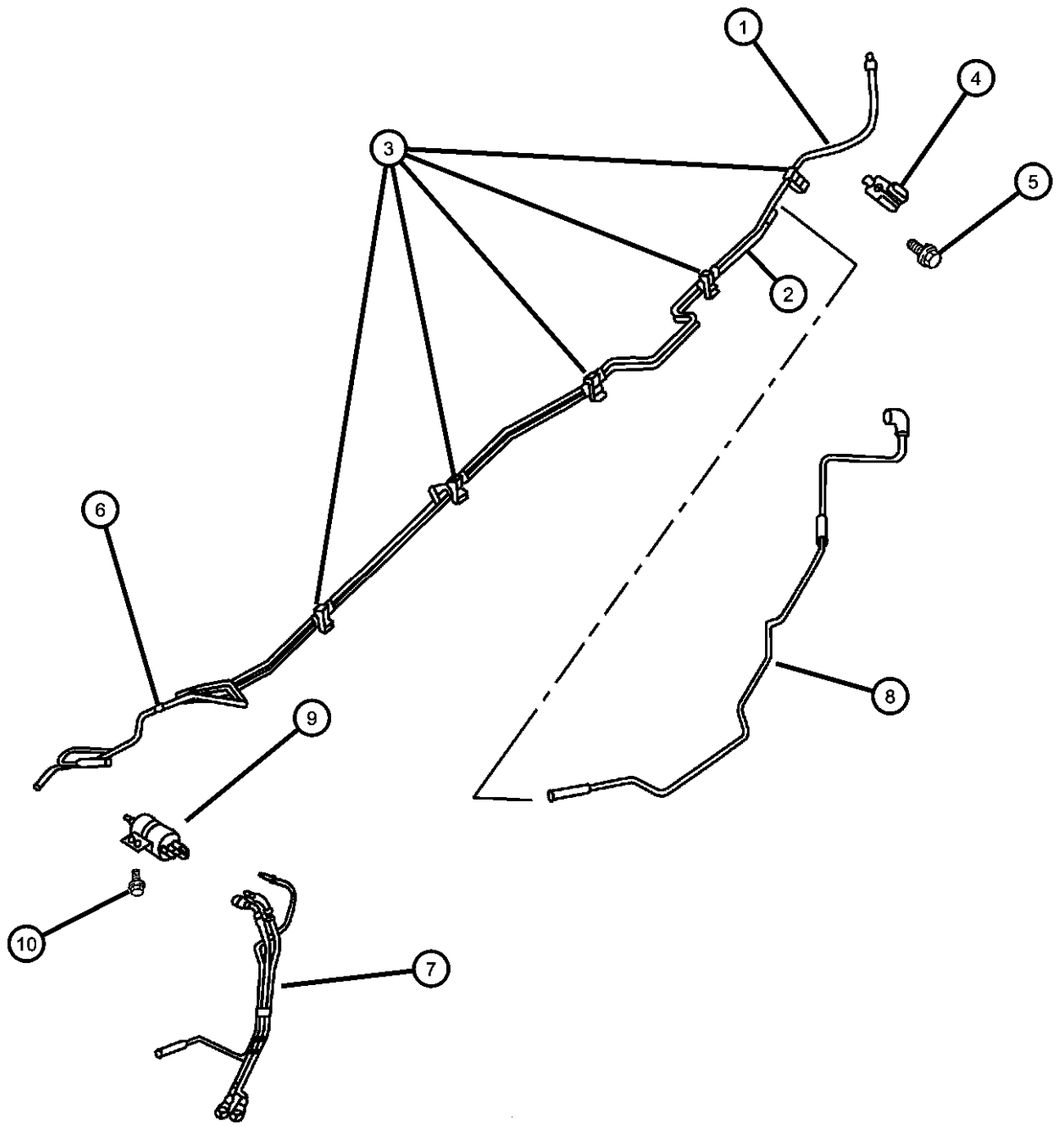

ITEM	PART NUMBER	QTY	LINE	SERIES	BODY	ENGINE	TRANS	TRIM	DESCRIPTION
Note; Sales Codes [ER0]= All 4.0L, 6 Cylinder Gas Engines [EV0]= All 4.7L V-8 Gas Engines									
1	05073516AA	1				ER0, EV0			TUBE, Fuel Supply
2	05073517AA	1				ER0, EV0			TUBE, Vacuum
3	05073519AA	6				ER0, EV0			CLIP, Fuel Bundle
4	05073520AA	1				ER0, EV0			CLIP, Fuel Bundle
5	06102132AA	1							SCREW, Hex Head, M6x1x20
6	05073521AA	1				ER0, EV0			CLIP, Fuel Bundle
7	52100196AG	1							TUBE, Fuel
8	05073518AA	1				ER0, EV0			TUBE, Fuel Vapor
9	52100283AE	1				ER0, EV0			FILTER AND REGULATOR, Fuel
10	06102132AA	2							SCREW, Hex Head, M6x1x20

GRAND CHEROKEE (WJ)

SERIES	LINE	BODY	ENGINE	TRANSMISSION
H = Laredo M = Sport P = Limited S = Overland	T = JEEP - 2WD J = JEEP - 4WD U = JEEP - 4WD (RHD)	74 = SPORT UTILITY 4-DR	ERH = Engine - 4.0L Power Tech I-6 EVA = Engine- 4.7L V8 MPI EVC = Engine - 4.7L HO V8 MPI ER0 = All 4.0L 6 Cyl. Gas EV0 = All 4.7L Gas	DGK = 4 Speed Auto, 42RE DGQ = 5 Speed Auto, 45RFE DG0 = All Automatic Transmissions

Fuel Rail, 4.0 [ERH], 4.7 [EVA, EVC]
Figure 14-410

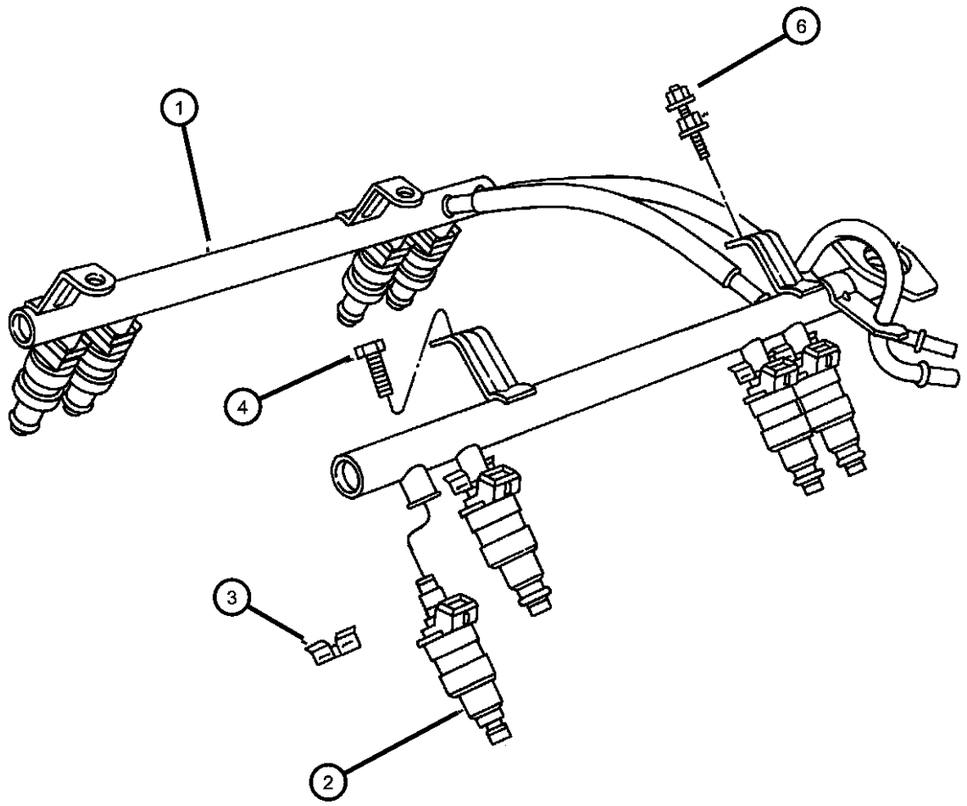

ITEM	PART NUMBER	QTY	LINE	SERIES	BODY	ENGINE	TRANS	TRIM	DESCRIPTION
Note; Sales Codes [ER0]= All 4.0L, 6 Cylinder Gas Engines [EV0]= All 4.7L V-8 Gas Engines									
1									RAIL, Fuel
	05014496AB	1				ER0			
	53030848AC	1				EV0			
2									INJECTOR, Fuel
	04854181	6				ER0			
	53032145AA	8				EV0			
3									CLIP, Fuel Injector
	04418257AB	6				ER0			
		8				EV0			
4	06501979	2				ER0			SCREW AND WASHER, Hex Head, M6x1x17
-5	06505504AA	4				EV0			SCREW
6	06502647	2				ER0			STUD, M6x1.00x44
-7									O RING KIT, Fuel Injector
	04897125AA	6				ER0			
		8				EV0			

GRAND CHEROKEE (WJ)

SERIES	LINE	BODY	ENGINE	TRANSMISSION
H = Laredo M = Sport P = Limited S = Overland	T = JEEP - 2WD J = JEEP - 4WD U = JEEP - 4WD (RHD)	74 = SPORT UTILITY 4-DR	ERH = Engine - 4.0L Power Tech I-6 EVA = Engine- 4.7L V8 MPI EVC = Engine - 4.7L HO V8 MPI ER0 = All 4.0L 6 Cyl. Gas EV0 = All 4.7L Gas	DGK = 4 Speed Auto, 42RE DGQ = 5 Speed Auto, 45RFE DG0 = All Automatic Transmissions

Fuel Pump and Sending Unit, 4.0 [ERH], 4.7 [EVA, EVC]
Figure 14-510

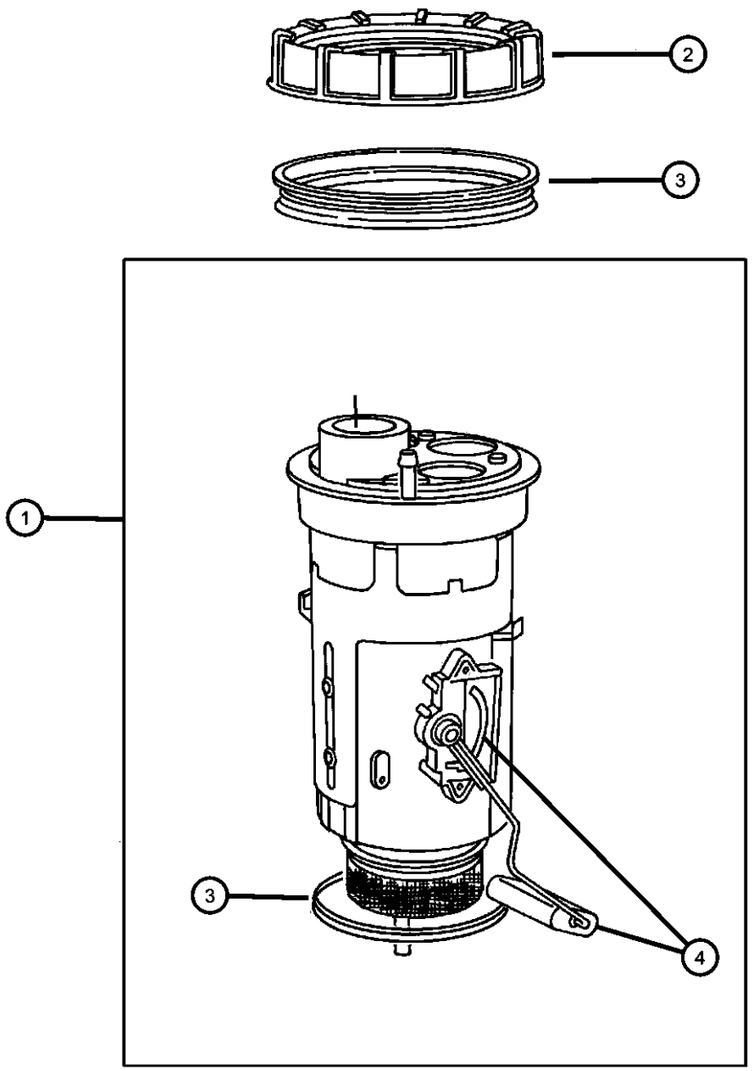

ITEM	PART NUMBER	QTY	LINE	SERIES	BODY	ENGINE	TRANS	TRIM	DESCRIPTION
1	05018056AB	1							MODULE PACKAGE, Fuel Pump/Level Unit
2	52005389	1							NUT, Fuel Pump Module
3	52018808	1							SEAL, Fuel Pump and Level Unit
4	05018057AA	1							LEVEL UNIT PACKAGE, Fuel
-5	52100435AB	1							VALVE, Fuel Control
-6	52100562AA	1							RETAINER

GRAND CHEROKEE (WJ)

SERIES	LINE	BODY	ENGINE	TRANSMISSION
H = Laredo M = Sport P = Limited S = Overland	T = JEEP - 2WD J = JEEP - 4WD U = JEEP - 4WD (RHD)	74 = SPORT UTILITY 4-DR	ERH = Engine - 4.0L Power Tech I-6 EVA = Engine- 4.7L V8 MPI EVC = Engine - 4.7L HO V8 MPI ER0 = All 4.0L 6 Cyl. Gas EV0 = All 4.7L Gas	DGK = 4 Speed Auto, 42RE DGQ = 5 Speed Auto, 45RFE DG0 = All Automatic Transmissions

AR = use ase required - = Non illustrrated part

Throttle Body, 4.0 [ERH], 4.7 [EVA, EVC]
Figure 14-610

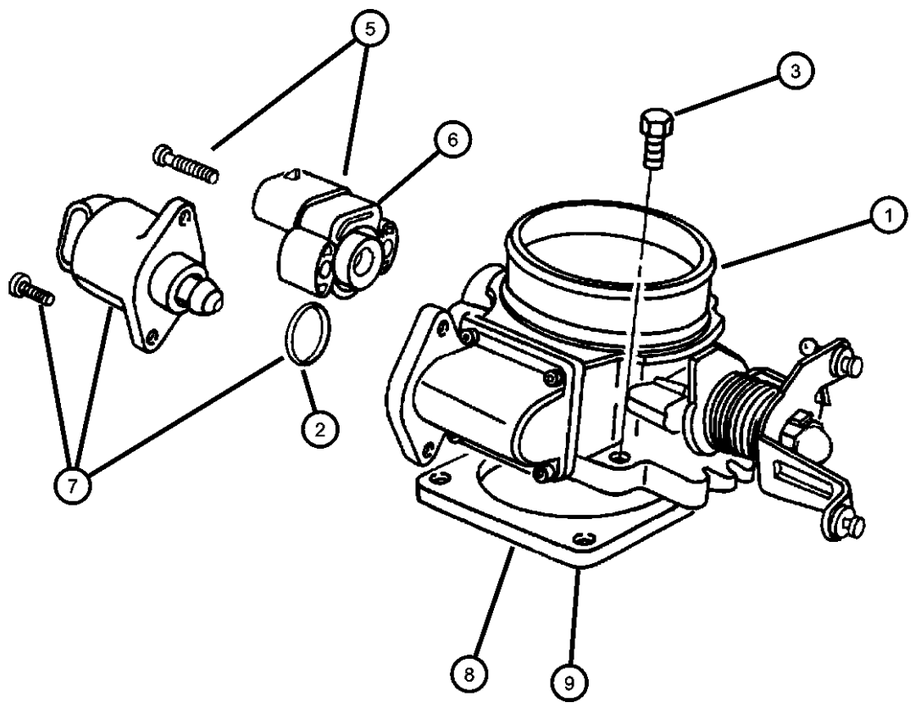

ITEM	PART NUMBER	QTY	LINE	SERIES	BODY	ENGINE	TRANS	TRIM	DESCRIPTION
Note; Sales Codes [ER0]= All 4.0L, 6 Cylinder Gas Engines [EVA]= 4.7L Power Tech V-8 [EVC]= 4.7l Power Tech High Output V-8 [EV0]= All 4.7L Gas Engines									
1									THROTTLE BODY
	53013163AB	1				EV0			
	53013290AA	1				ER0			
2	83503642	1				EV0			O RING, Throttle Body
3	06503929	4				ER0			SCREW AND WASHER, Coned Pilot, M6x1x30
-4									SCREW, M6x1x40
	06505034AA	10				EVC			
		10				EVA			
5	05086203AA	1				ER0			SENSOR PACKAGE, Throttle Position
6	05017479AA	1				EV0			SENSOR KIT, Throttle Position
7									MOTOR, Air Idle Speed
	04874373AB	1				ER0			
	53030840	1				EV0			
8	53007543	1				ER0			GASKET, Throttle Body
9									GASKET, Throttle Body To Intake
	53030952	1				EVC			
		1				EVA			

GRAND CHEROKEE (WJ)

SERIES	LINE	BODY	ENGINE	TRANSMISSION
H = Laredo M = Sport P = Limited S = Overland	T = JEEP - 2WD J = JEEP - 4WD U = JEEP - 4WD (RHD)	74 = SPORT UTILITY 4-DR	ERH = Engine - 4.0L Power Tech I-6 EVA = Engine- 4.7L V8 MPI EVC = Engine - 4.7L HO V8 MPI ER0 = All 4.0L 6 Cyl. Gas EV0 = All 4.7L Gas	DGK = 4 Speed Auto, 42RE DGQ = 5 Speed Auto, 45RFE DG0 = All Automatic Transmissions

Throttle Controls, 4.0 [ERH]
Figure 14-710

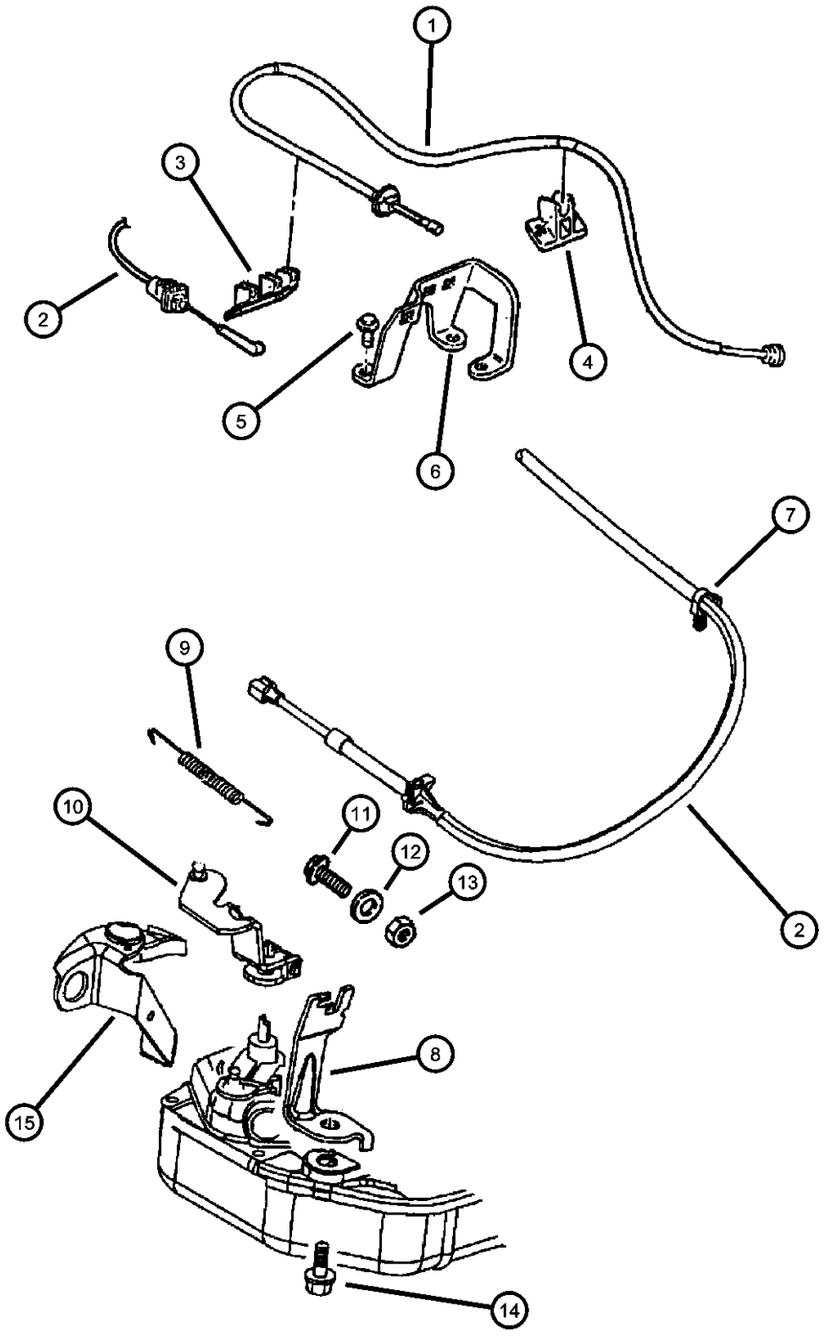

ITEM	PART NUMBER	QTY	LINE	SERIES	BODY	ENGINE	TRANS	TRIM	DESCRIPTION
Note; Sales Codes [DGK]= Speed Automatic Transmission 42RE [ER0]= All 4.0L, 6 Cylinder Gas Engines									
1	04854150AB	1				ER0			CABLE, Accelerator
2	52104284AA	1					DGK		CABLE, Throttle Valve
3	52079029	1				ER0			GUIDE, Accelerator Cable
4	52078987	1				ER0			GUIDE, Accelerator Cable
5	06501979	2				ER0			SCREW AND WASHER, Hex Head, M6x1x17
6	53013160AA	1				ER0			BRACKET, Accelerator Cable
7	53013160AA	1							CLIP, (NOT SERVICED)
8	52078867	1				ER0			BRACKET, Cable
9	53009055	1					DGK		SPRING, Throttle Valve Return
10	52078723AB	1				ER0			LEVER, Throttle Valve
11	00181065	1				ER0			BOLT, Hex Head, .25-20x1.00
12	00138165	1				ER0			WASHER, Lock
13	J0120375	1				ER0			NUT, Hex, .250-20
14	J0120375	1							BOLT, Hex Head, .375-16x1.00, (NOT SERVICED)
15	52104057	1	J				DGK		BRACKET, Shift Cable

GRAND CHEROKEE (WJ)

SERIES	LINE	BODY	ENGINE	TRANSMISSION
H = Laredo M = Sport P = Limited S = Overland	T = JEEP - 2WD J = JEEP - 4WD U = JEEP - 4WD (RHD)	74 = SPORT UTILITY 4-DR	ERH = Engine - 4.0L Power Tech I-6 EVA = Engine- 4.7L V8 MPI EVC = Engine - 4.7L HO V8 MPI ER0 = All 4.0L 6 Cyl. Gas EV0 = All 4.7L Gas	DGK = 4 Speed Auto, 42RE DGQ = 5 Speed Auto, 45RFE DG0 = All Automatic Transmissions

Throttle Controls, 4.7 [EVA, EVC]
Figure 14-720

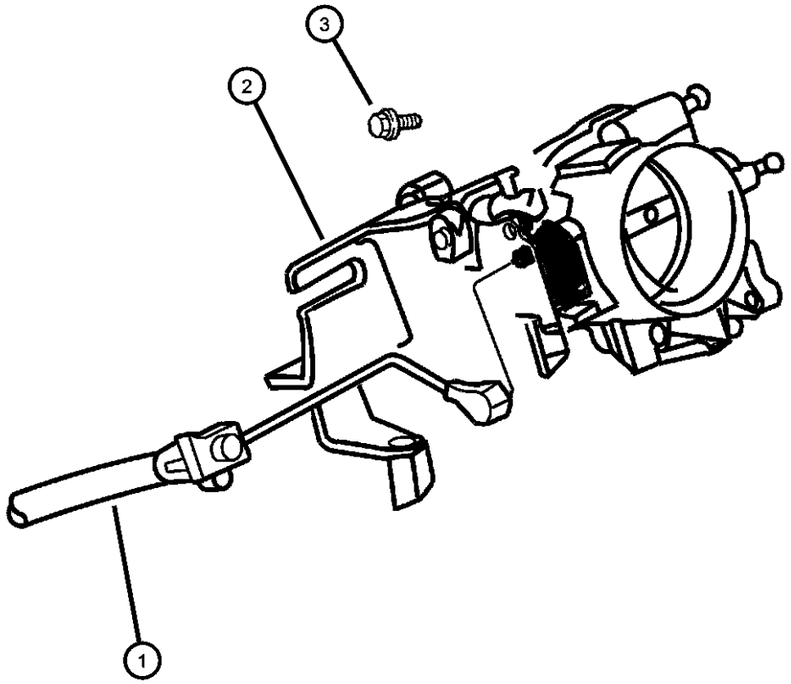

ITEM	PART NUMBER	QTY	LINE	SERIES	BODY	ENGINE	TRANS	TRIM	DESCRIPTION
Note; Sales Codes [EVA]= 4.7L Power Tech V-8 [EVC]= 4.7L Power Tech High Output V-8 [EV0]= All 4.7L Gas Engines									
1	04854061AD	1				EV0			CABLE, Accelerator
2									BRACKET, Accelerator Cable
	53031683AA	1				EVC			
		1				EVA			
3		1							SCREW, M6X1.00X16.00, (NOT SERVICED)

GRAND CHEROKEE (WJ)

SERIES	LINE	BODY	ENGINE	TRANSMISSION
H = Laredo M = Sport P = Limited S = Overland	T = JEEP - 2WD J = JEEP - 4WD U = JEEP - 4WD (RHD)	74 = SPORT UTILITY 4-DR	ERH = Engine - 4.0L Power Tech I-6 EVA = Engine- 4.7L V8 MPI EVC = Engine - 4.7L HO V8 MPI ER0 = All 4.0L 6 Cyl. Gas EV0 = All 4.7L Gas	DGK = 4 Speed Auto, 42RE DGQ = 5 Speed Auto, 45RFE DG0 = All Automatic Transmissions

Air Cleaner, 4.0 [ERH]
Figure 14-810

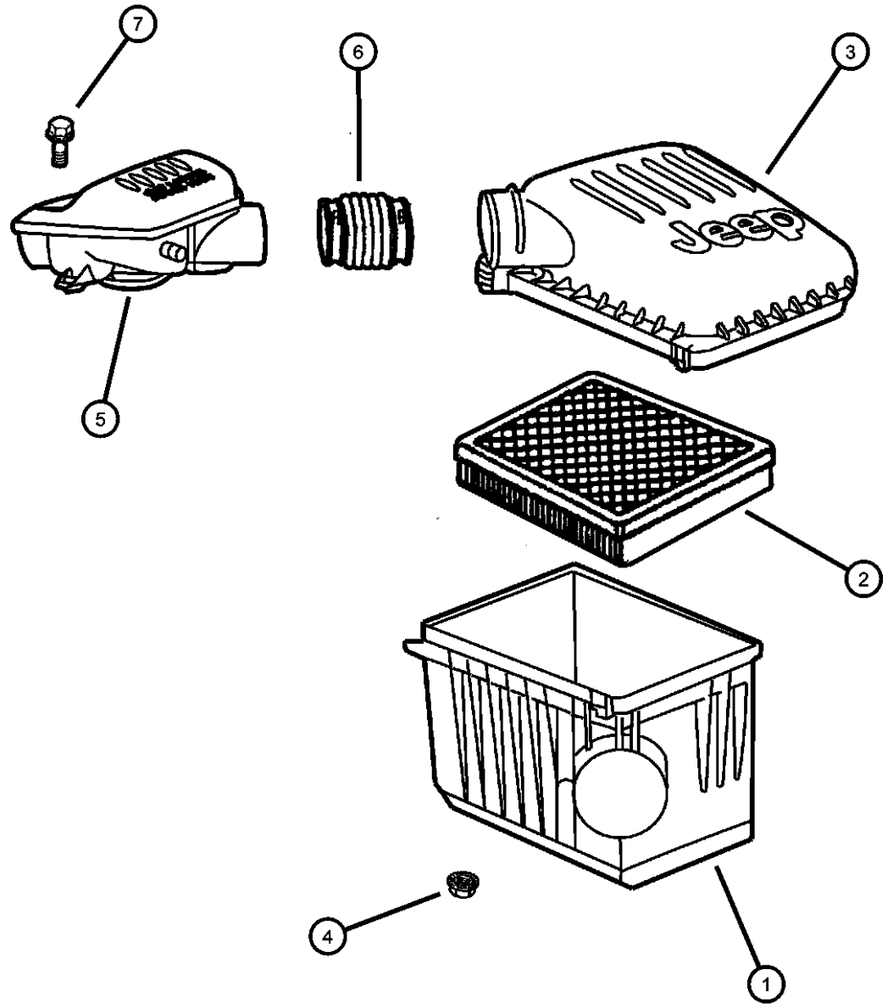

ITEM	PART NUMBER	QTY	LINE	SERIES	BODY	ENGINE	TRANS	TRIM	DESCRIPTION
Note; Sales Codes [ER0]= All 4.0L Gas Engines									
1	05013462AA	1				ER0			BODY, Air Cleaner
2	53007386	1				ER0			FILTER, Air
	P4510475								Performance Air Filter, WJ, 1999-2002, 4.7L
3	05013461AA	1				ER0			COVER, Air Cleaner
4	05013461AA	1							NUT, M8x1.25, (NOT SERVICED)
5	04854013	1				ER0			RESONATOR, Air Cleaner
6	04854014	1				ER0			HOSE, Air Cleaner
7	06504041	1				ER0			SCREW AND WASHER, Hex Head, M6x1x30

GRAND CHEROKEE (WJ)

SERIES	LINE	BODY	ENGINE	TRANSMISSION
H = Laredo M = Sport P = Limited S = Overland	T = JEEP - 2WD J = JEEP - 4WD U = JEEP - 4WD (RHD)	74 = SPORT UTILITY 4-DR	ERH = Engine - 4.0L Power Tech I-6 EVA = Engine- 4.7L V8 MPI EVC = Engine - 4.7L HO V8 MPI ER0 = All 4.0L 6 Cyl. Gas EV0 = All 4.7L Gas	DGK = 4 Speed Auto, 42RE DGQ = 5 Speed Auto, 45RFE DG0 = All Automatic Transmissions

Air Cleaner, 4.7 [EVA, EVC]
Figure 14-820

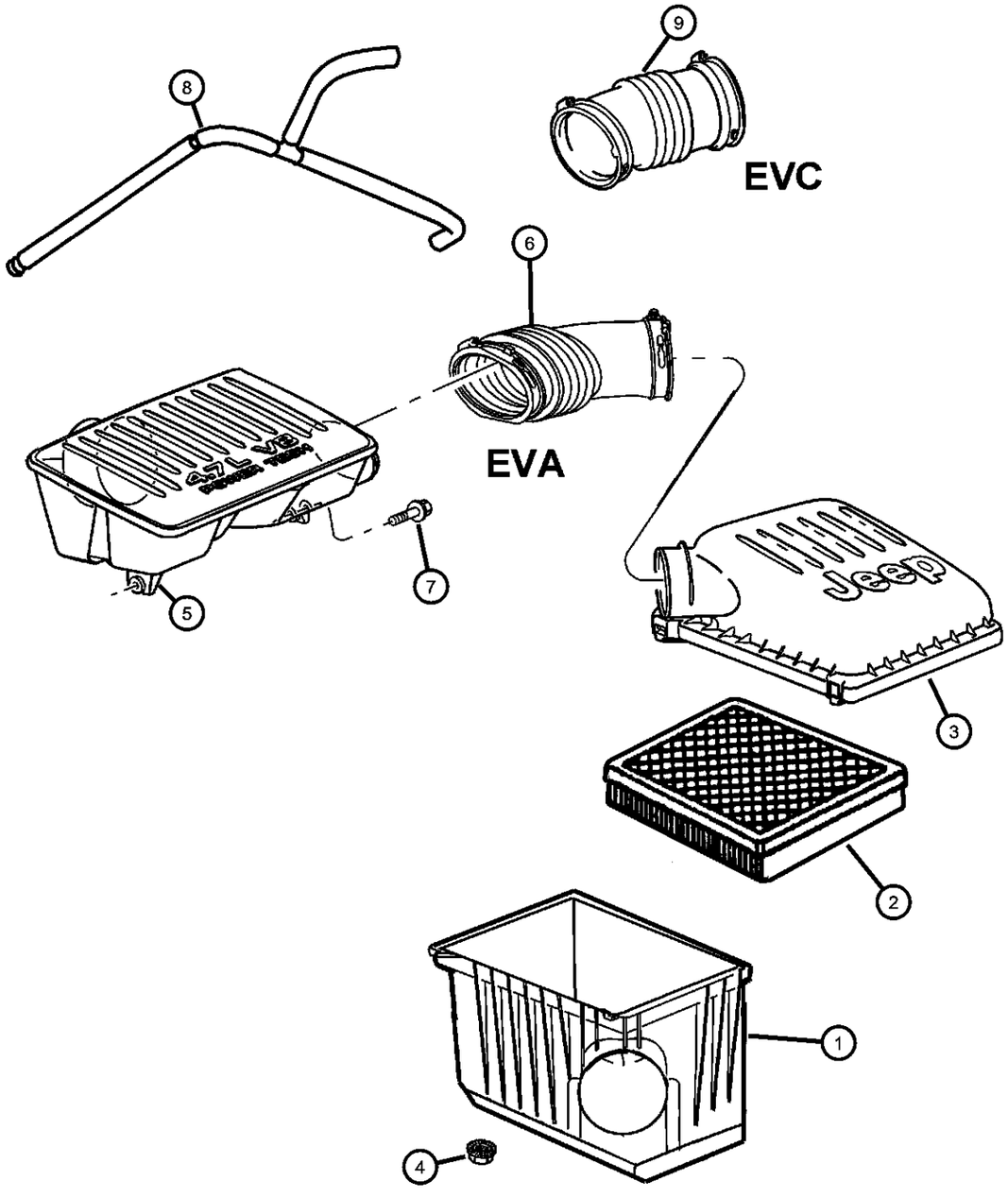

ITEM	PART NUMBER	QTY	LINE	SERIES	BODY	ENGINE	TRANS	TRIM	DESCRIPTION
Note; Sales Codes [EVA]= 4.7L Power Tech V-8 [EVC]= 4.7L High Output Power Tech V-8									
1									BODY, Air Cleaner
	05013462AA	1				EVA			
	05018322AA	1				EVC			
2									FILTER, Air
	05015610AA	1				EVC			
	53007386	1				EVA			
	P4510475								Performance Air Filter, WJ, 1999-2002, 4.7L
3									COVER, Air Cleaner
	05013461AA	1				EVA			
	05018321AA	1				EVC			
4	06505245AA	4							NUT, M8x1.25
5									RESONATOR, Air Cleaner
	04854011	1				EVA			
	53013417AA	1				EVC			
6	04854012	1				EVA			DUCT, Air Cleaner
7	06101769	2				EV0			SCREW, Hex Head, M6x1x35
8	53031667AB	1				EV0			TUBE, Breather
9	53013418AA	1				EVC			HOSE, Air Cleaner

GRAND CHEROKEE (WJ)

SERIES	LINE	BODY	ENGINE	TRANSMISSION
H = Laredo M = Sport P = Limited S = Overland	T = JEEP - 2WD J = JEEP - 4WD U = JEEP - 4WD (RHD)	74 = SPORT UTILITY 4-DR	ERH = Engine - 4.0L Power Tech I-6 EVA = Engine- 4.7L V8 MPI EVC = Engine - 4.7L HO V8 MPI ER0 = All 4.0L 6 Cyl. Gas EV0 = All 4.7L Gas	DGK = 4 Speed Auto, 42RE DGQ = 5 Speed Auto, 45RFE DG0 = All Automatic Transmissions

Air Intake System, 4.0L [ERH], 4.7L [EVA]
Figure 14-910

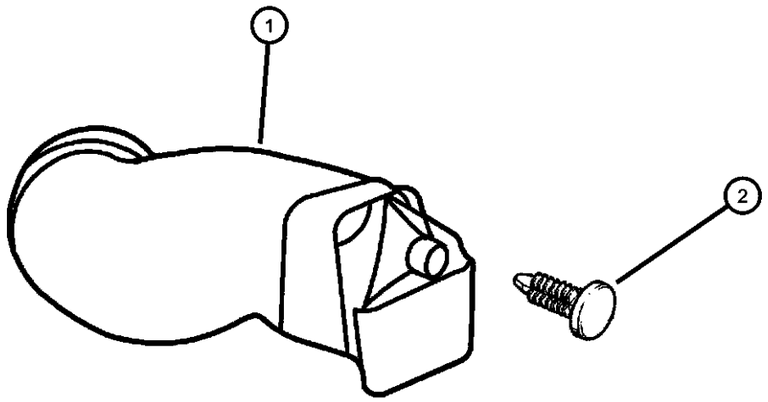

ITEM	PART NUMBER	QTY	LINE	SERIES	BODY	ENGINE	TRANS	TRIM	DESCRIPTION
Note; Sales Codes [ER0]=All 4.0L Engines [EVA]= 4.7L Power Tech V-8 Engine									
1									DUCT, Ambient Air
	53013345AA	1				ER0, EVA			
	53013419AA	1				EVC			
2	53013419AA	1							PIN, Retainer, (NOT SERVICED)

GRAND CHEROKEE (WJ)

SERIES	LINE	BODY	ENGINE	TRANSMISSION
H = Laredo M = Sport P = Limited S = Overland	T = JEEP - 2WD J = JEEP - 4WD U = JEEP - 4WD (RHD)	74 = SPORT UTILITY 4-DR	ERH = Engine - 4.0L Power Tech I-6 EVA = Engine- 4.7L V8 MPI EVC = Engine - 4.7L HO V8 MPI ER0 = All 4.0L 6 Cyl. Gas EV0 = All 4.7L Gas	DGK = 4 Speed Auto, 42RE DGQ = 5 Speed Auto, 45RFE DG0 = All Automatic Transmissions

Speed Control, 4.0 [ERH], 4.7 [EVA, EVC]
Figure 14-1010

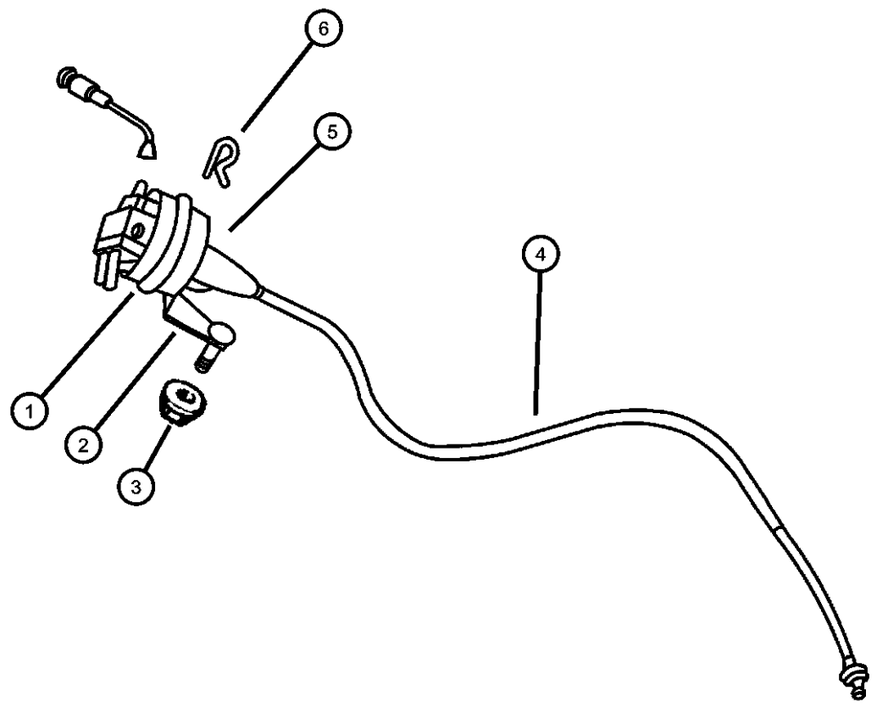

ITEM	PART NUMBER	QTY	LINE	SERIES	BODY	ENGINE	TRANS	TRIM	DESCRIPTION
Note; Sales Codes [ER0]= All 4.0L Gas Engines [EV0]= All 4.7L Gas Engines									
1									SERVO, Speed Control, [Vacuum harness is part of hevac a/c harness]
	04669979	1				ER0			
		1				EV0			
2									BRACKET, Cruise Control Servo
	04854057AH	1				ER0			
		1				EV0			
3	06102167AA	2				ER0, EV0			NUT AND WASHER
4									CABLE, Speed Control
	04854055AC	1				EV0			
	04854058	1				ER0			
5									NUT, Hex Flange Serration, M6x1
	06502493	2				ER0			
		2				EV0			
6									CLIP, Cable to Servo Attach
	06025867	1				ER0			
		1				EV0			

GRAND CHEROKEE (WJ)

SERIES	LINE	BODY	ENGINE	TRANSMISSION
H = Laredo M = Sport P = Limited S = Overland	T = JEEP - 2WD J = JEEP - 4WD U = JEEP - 4WD (RHD)	74 = SPORT UTILITY 4-DR	ERH = Engine - 4.0L Power Tech I-6 EVA = Engine- 4.7L V8 MPI EVC = Engine - 4.7L HO V8 MPI ER0 = All 4.0L 6 Cyl. Gas EV0 = All 4.7L Gas	DGK = 4 Speed Auto, 42RE DGQ = 5 Speed Auto, 45RFE DG0 = All Automatic Transmissions

Accelerator Pedal, 4.0 [ERH], 4.7 [EVA, EVC]
Figure 14-1110

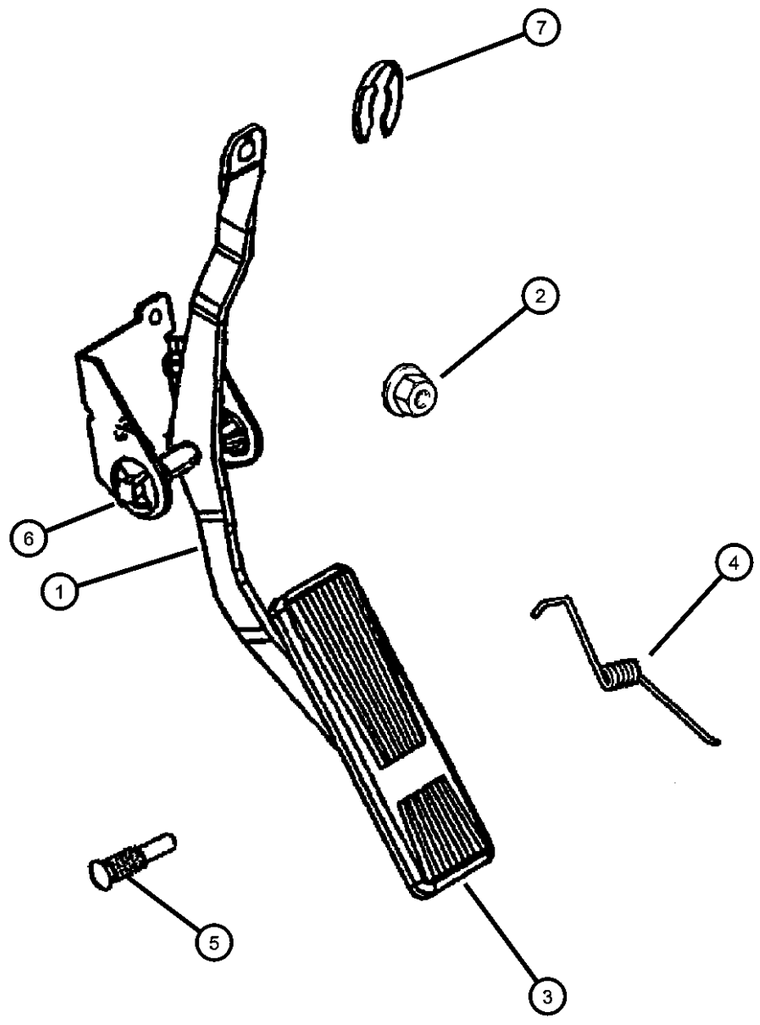

ITEM	PART NUMBER	QTY	LINE	SERIES	BODY	ENGINE	TRANS	TRIM	DESCRIPTION
Note; Sales Codes [ER0]= ALL 4.0L, 6 Cylinder Gas Engines [EV0]= All 4.7L Gas Engines									
1	04854130AB	1				ER0, EV0			PEDAL, Accelerator
2	34201680	2							NUT, Hex Flange, M6x1
3	53003932AB	1				ER0, EV0			PAD, Accelerator Pedal
4	52078168	1				ER0, EV0			SPRING, Accelerator Pedal Return
5	J3220231	1				ER0, EV0			PIN, Accelerator Pedal Mtg.
6	52078653	2				ER0, EV0			BUSHING, Accelerator Pedal
7	05214613	1							CLIP, Cable

GRAND CHEROKEE (WJ)

SERIES	LINE	BODY	ENGINE	TRANSMISSION
H = Laredo M = Sport P = Limited S = Overland	T = JEEP - 2WD J = JEEP - 4WD U = JEEP - 4WD (RHD)	74 = SPORT UTILITY 4-DR	ERH = Engine - 4.0L Power Tech I-6 EVA = Engine- 4.7L V8 MPI EVC = Engine - 4.7L HO V8 MPI ER0 = All 4.0L 6 Cyl. Gas EV0 = All 4.7L Gas	DGK = 4 Speed Auto, 42RE DGQ = 5 Speed Auto, 45RFE DG0 = All Automatic Transmissions

Pedal Brake, Power Adjustable
Figure 14-1120

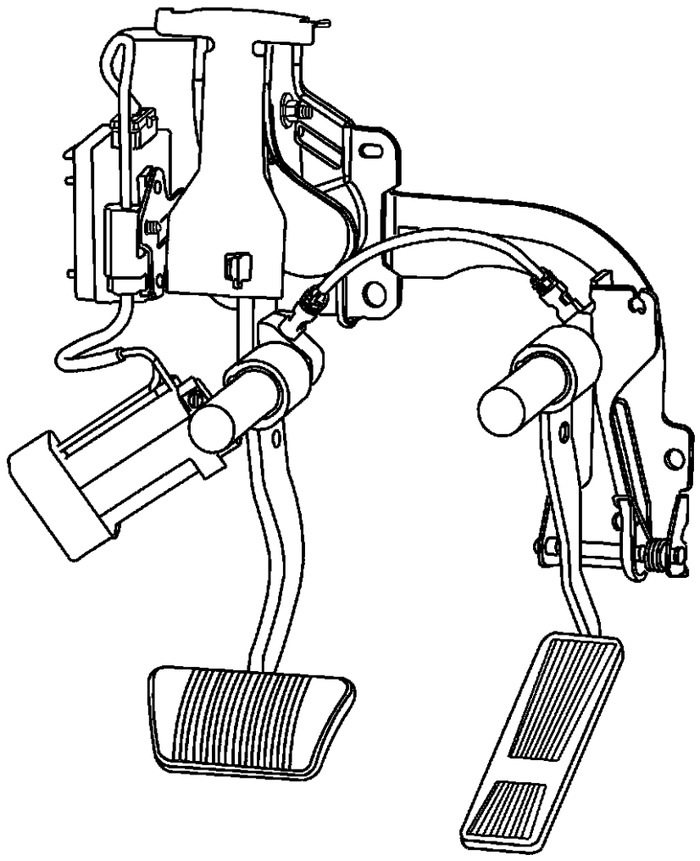

ITEM	PART NUMBER	QTY	LINE	SERIES	BODY	ENGINE	TRANS	TRIM	DESCRIPTION
-1	05073040AA	1							HARNESS
-2	05073041AA	1							MOTOR, Adjustable Brake and Accelerator Pedal
-3	05072251AA	1							MODULE, Brake Pedal
-4	04779027	1							PAD, Pedal
-5									SWITCH, Adjustable Pedals
	5HU331DVAB	1							[DB]
		1							[DV]
	5HU331L8AB	1							[L5]
	5HU331TMAB	1							[T5]
-6	06100517	2							NUT, Hex Flange Lock, M8 Phosphate
-7	06035334	1							CLIP, Brake Push Rod

GRAND CHEROKEE (WJ)

SERIES	LINE	BODY	ENGINE	TRANSMISSION
H = Laredo M = Sport P = Limited S = Overland	T = JEEP - 2WD J = JEEP - 4WD U = JEEP - 4WD (RHD)	74 = SPORT UTILITY 4-DR	ERH = Engine - 4.0L Power Tech I-6 EVA = Engine- 4.7L V8 MPI EVC = Engine - 4.7L HO V8 MPI ER0 = All 4.0L 6 Cyl. Gas EV0 = All 4.7L Gas	DGK = 4 Speed Auto, 42RE DGQ = 5 Speed Auto, 45RFE DG0 = All Automatic Transmissions

Group - 16

Propeller Shafts and U-Joints

016-100 Propeller Shaft 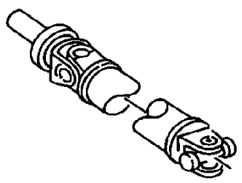			

Group - 16 Propeller Shafts and U-Joints

Illustration Title — Group-Fig. No.

Propeller Shaft

Propeller Shafts,Front and Rear ..... Fig. 16 - 110

Propeller Shafts,Front and Rear
Figure 16-110

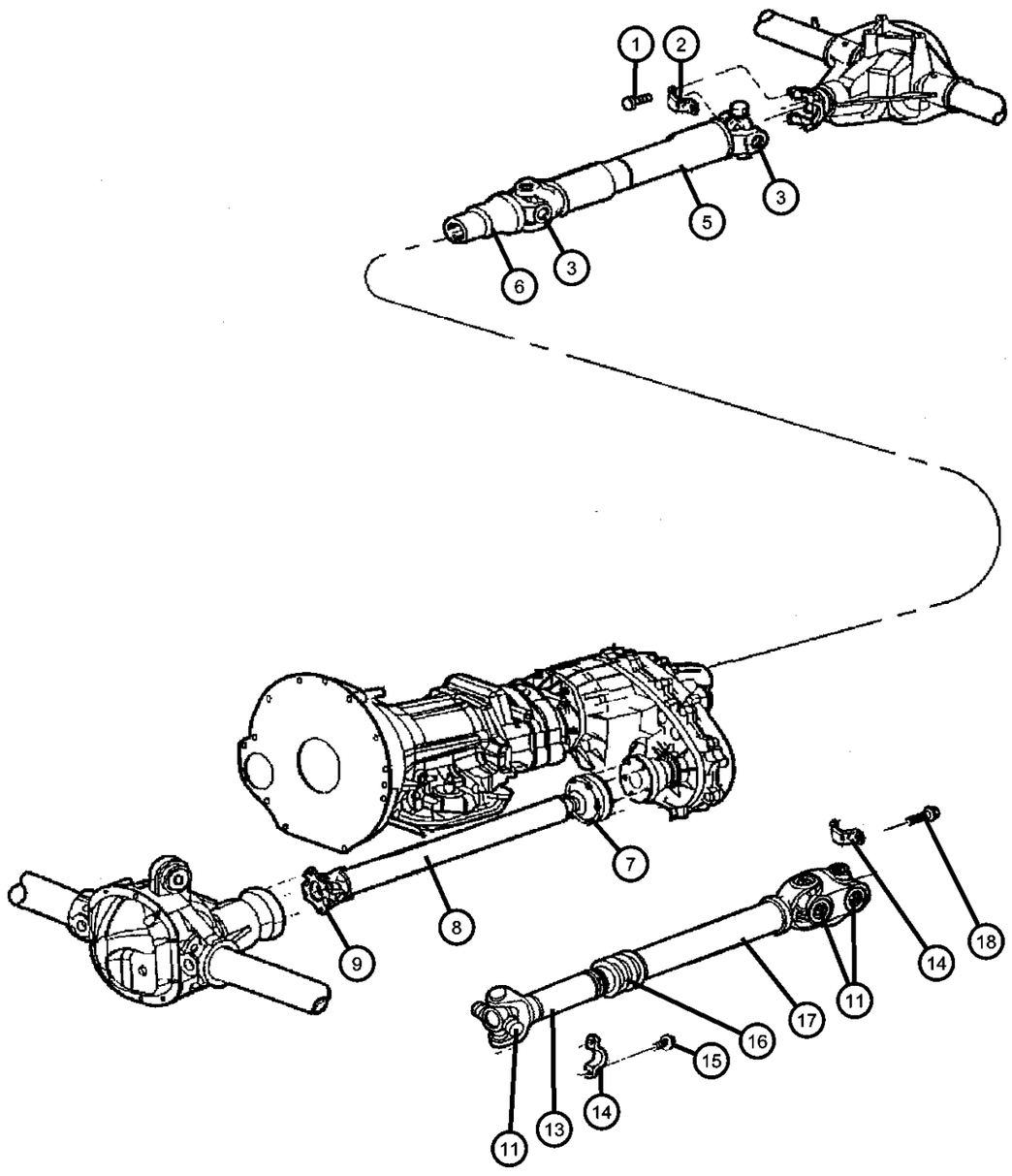

ITEM	PART NUMBER	QTY	LINE	SERIES	BODY	ENGINE	TRANS	TRIM	DESCRIPTION

Note:Sales Codes;
Note: Item 7,05015109AA bolt, when you order quanity 1, you will receive 2 bolts and 1 strap.
[ER0]=Engines - All 4.0L 6 Cylinder Gas
[EV0]=Engines - All 4.7L Gas
[DGK]=Transmission - 4-Speed Automatic,42RE
[DHF]=Quadra-Trac II On Demand 4 Wheel Drive System
[DHP]=Selec Trac Full Time 4WD System
[DRK]=Axle - Rear,Dana 44/226MM
[DRM]=Axle - Rear,Dana, Dana 35C/194MM

ITEM	PART NUMBER	QTY	LINE	SERIES	BODY	ENGINE	TRANS	TRIM	DESCRIPTION
1	J4006928	4				ER0, EV0			BOLT
2	J3240553	2				ER0, EV0			STRAP, Prop Shaft
3									U-JOINT
	04882793	2	J			ER0			[DHF,DRM], Front or Rear
		2	J			ER0			[DHF,DRK], Front or Rear
		2	J			ER0			[DHP,DRM], Front or Rear
		2	J			ER0			[DHP,DRK], Front or Rear
		2	J			EV0			[DHF], Front or Rear
	05014733AA	1	J			EV0			[DHP], Front
	05015694AA	1	J			EV0			[DHP], Rear
		2	T			ER0			[DRK], Front or Rear
		2	T			ER0			[DRM], Front or Rear
-4									RING, U Joint
	J3207886	4	J			EV0			Front or Rear
		4	J			ER0			Front or Rear
		4	T			ER0			Front or Rear
5									SHAFT, Drive, Rear 1-Piece
	52099485AE	1	J			ER0			[DHF,DRM]
	52099487AE	1	J			EV0			[DHF]
	52105530AC	1	J			ER0			[[DHP,DRM]
	52105901AB	1	J			ER0			[[DHP,DRK]
	52105972AA	1	T			ER0			[DRM]
	52105973AA	1	T			EV0			No Component Parts Available
	52111483AC	1	J			ER0			[DHF,DRK]
	52111490AB	1	J			EV0			[DHP]
	52853007AA	1	T			ER0			[DRK]
6									YOKE, Drive Shaft

GRAND CHEROKEE (WJ)

SERIES	LINE	BODY	ENGINE	TRANSMISSION
H = Laredo M = Sport P = Limited S = Overland	T = JEEP - 2WD J = JEEP - 4WD U = JEEP - 4WD (RHD)	74 = SPORT UTILITY 4-DR	ERH = Engine - 4.0L Power Tech I-6 EVA = Engine- 4.7L V8 MPI EVC = Engine - 4.7L HO V8 MPI ER0 = All 4.0L 6 Cyl. Gas EV0 = All 4.7L Gas	DGK = 4 Speed Auto, 42RE DGQ = 5 Speed Auto, 45RFE DG0 = All Automatic Transmissions

AR = use ase required - = Non illustrrated part

Propeller Shafts,Front and Rear
Figure 16-110

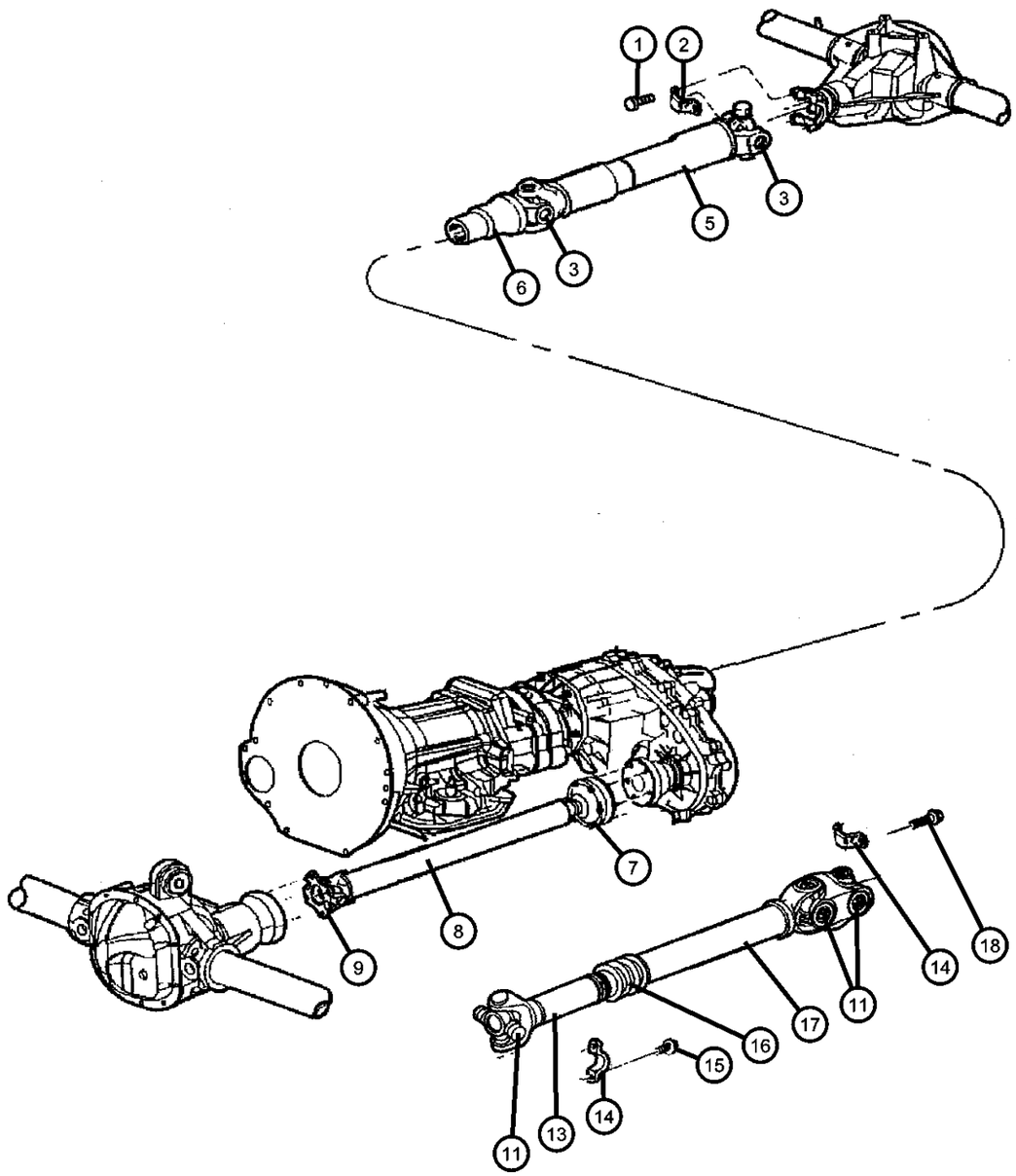

ITEM	PART NUMBER	QTY	LINE	SERIES	BODY	ENGINE	TRANS	TRIM	DESCRIPTION
	05018773AA	1	J			EV0			[DHP]
	05073608AA	1	J			ER0			[DHF,DRM]
		1	J			ER0			[DHF,DRK]
	05080893AA	1	J			ER0			[DHP,DRM]
		1	J			ER0			[DHP,DRK]
	05083257AA	1	T			ER0			[DRK]
		1	T			ER0			[DRM]
	05093484AA	1	J			EV0			[DHF]
7	05015109AA	3	J			ER0			BOLT AND WASHER, With Tag# 52105884AA, Mounting
8	52105884AA	1	J			ER0	DGK		SHAFT, Drive, Front, With Tag# 52105884AA
9	05015694AA	1	J			ER0	DGK		U-JOINT, With Tag# 52105884AA, Front
-10	J3207886	4	J			ER0	DGK		RING, U Joint, With Tag# 52105884AA, Front
11	04882793	3	J			EV0			U-JOINT, With Tag# 52853500AA, Front or Rear
-12	J3207886	4	J			EV0			RING, U Joint, With Tag# 52853500AA, Front or Rear
13	05016375AA	1	J			EV0			YOKE, Drive Shaft, With Tag# 52853500AA
14									STRAP, Prop Shaft
	J3240553	2				ER0, EV0			With Tag# 52853500AA, Front or Rear
		2				ER0, EV0			With Tag# 52105884AA, Front
15	J4006928	4				ER0, EV0			BOLT, To Front Axle, Front
16	05012793AA	1	J			EV0			BOOT, Driveshaft, With Tag# 52853500AA
17	05019616AA	1	J			EV0			SHAFT, Drive, Front, With Tag# 52853500AA
18	06036415AA	4	J			EV0			BOLT, With Tag# 52853500AA

GRAND CHEROKEE (WJ)

SERIES	LINE	BODY	ENGINE	TRANSMISSION
H = Laredo	T = JEEP - 2WD	74 = SPORT UTILITY 4-DR	ERH = Engine - 4.0L Power Tech I-6	DGK = 4 Speed Auto, 42RE
M = Sport	J = JEEP - 4WD		EVA = Engine- 4.7L V8 MPI	DGQ = 5 Speed Auto, 45RFE
P = Limited	U = JEEP - 4WD (RHD)		EVC = Engine - 4.7L HO V8 MPI	DG0 = All Automatic Transmissions
S = Overland			ER0 = All 4.0L 6 Cyl. Gas	
			EV0 = All 4.7L Gas	

Group - 17

Rear Suspension

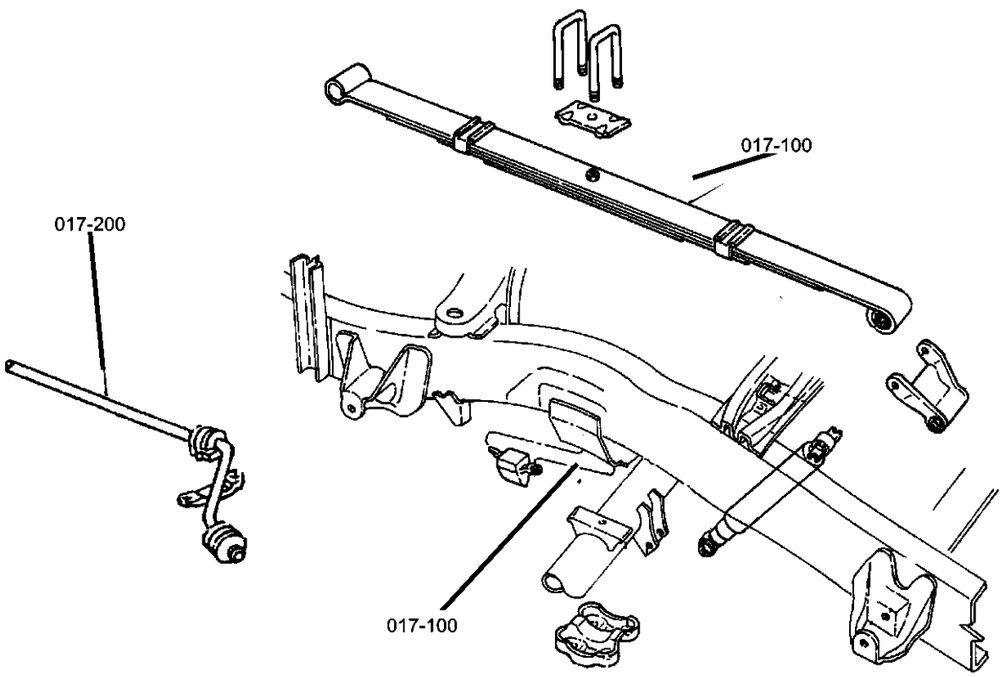

017-100 Rear Suspension 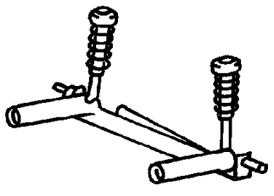	**017-200** Rear Stabilizer 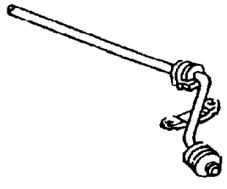		

Group - 17 Rear Suspension

Illustration Title — Group-Fig. No.

Rear Suspension
Supension, Rear,with Spring,Shocks and Control Arms ..... Fig. 17 - 110

Rear Stabilizer
Stabilizer Bar, Rear ..... Fig. 17 - 210

Supension, Rear,with Spring,Shocks and Control Arms
Figure 17-110

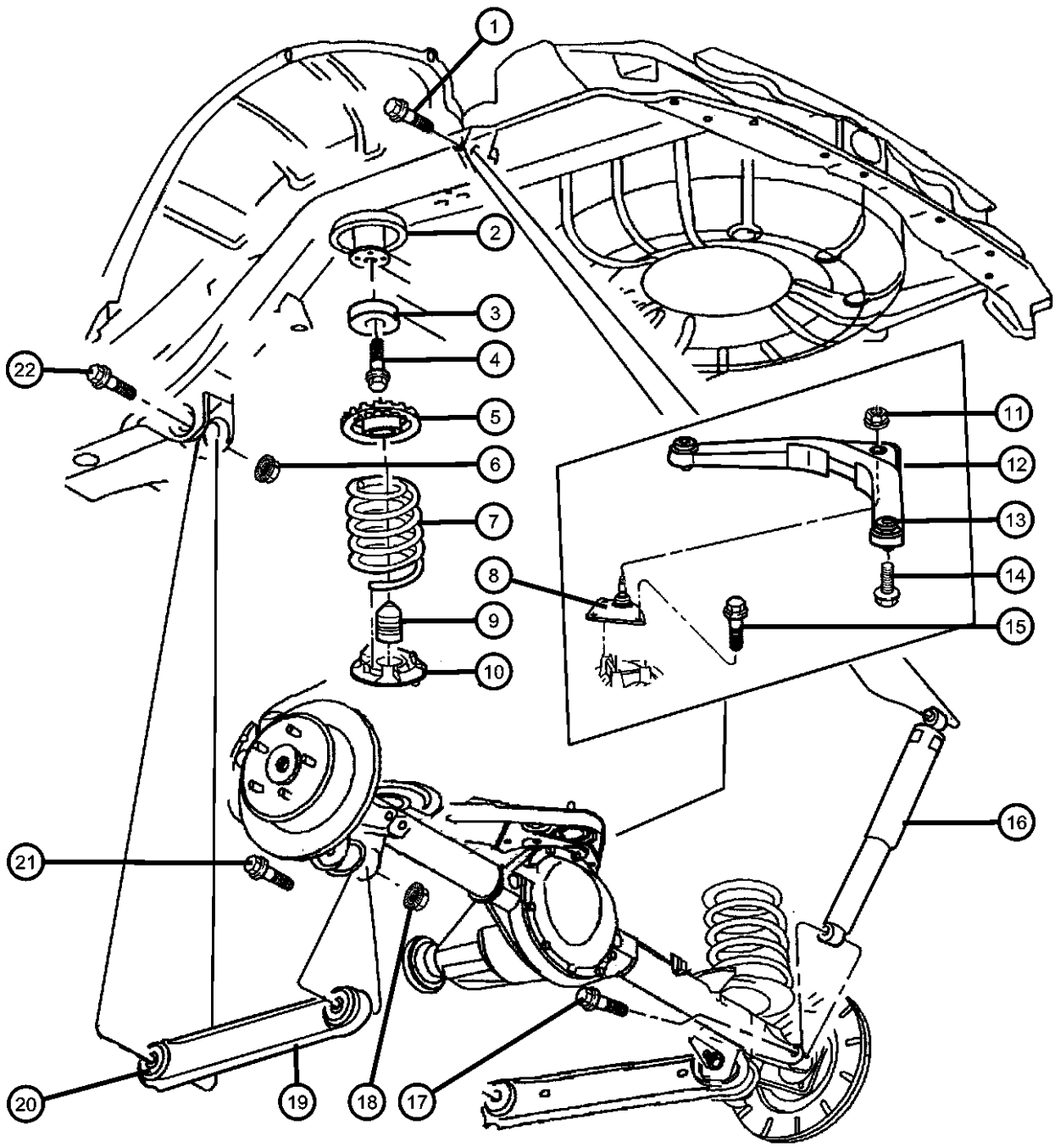

ITEM	PART NUMBER	QTY	LINE	SERIES	BODY	ENGINE	TRANS	TRIM	DESCRIPTION
Note:Sales Codes;									
[SDA]=Suspension - Normal Duty									
[SDU]=Shocks - High Pressure Gas Charged									
[ZKW] Through [ZYZ] = Spring Sales Codes will be found on Vehicle Identification Number [VIN] Sales Codes Listing									
1	06506147AA	2							SCREW, Hex Flange Head, M12x1.75x80, Shock Mounting, Upper
2	05014781AA	2							GUIDE, Rear Spring, None
3	52088350	2							SPACER, Jounce BumperUpper
4	06505378AA	2							SCREW, Hex Flange Head, M10x1.5x40, Jounce Bumper Spacer Attaching, Upper
5	52088346	2							ISOLATOR, Spring
6	06502698	3							NUT, Hex Flange Lock, LCA to Sill Mounting
7									SPRING, Suspension, Rear
	52088344	1							[ZLV,ZZV]
	52088345	1							[ZLW,ZZW]
	52088404	1							[ZKY,ZYY]
	52088550	1							[ZKX,ZYX]
	52088343	1							[ZKW,ZYW]
	52088551	1							[ZLU,ZZU]
	52089500AA	1							[ZKZ,ZYZ]
8	52088808AB	1							BALL JOINT ASSEMBLY, UPPER CONTROL ARM, REAR
9	52088352AB	2							BUMPER, JounceLower
10	52088402AB	2							ISOLATOR, SpringLower
11	06505688AA	1							NUT, Hex Flange Lock, M14x2, UCA to Axle Ball Joint
12	52088422AB	1							ARM, Upper Control, Rear, with 2-Bushings
13	52088425	2							BUSHING, Control Arm
14	06504748	2							SCREW, Hex Flange Head, M12x1.75x117, Control Arm to Body Mounting, Upper
15	06505445AA	3							SCREW, Hex Flange Head, M14x2x36, Ball Joint to Axle Mounting, Upper
16									SHOCK ABSORBER, Suspension, Rear
	52088221AE	2							[SDA]

GRAND CHEROKEE (WJ)

SERIES	LINE	BODY	ENGINE	TRANSMISSION
H = Laredo	T = JEEP - 2WD	74 = SPORT UTILITY 4-DR	ERH = Engine - 4.0L Power Tech I-6	DGK = 4 Speed Auto, 42RE
M = Sport	J = JEEP - 4WD		EVA = Engine- 4.7L V8 MPI	DGQ = 5 Speed Auto, 45RFE
P = Limited	U = JEEP - 4WD (RHD)		EVC = Engine - 4.7L HO V8 MPI	DG0 = All Automatic Transmissions
S = Overland			ER0 = All 4.0L 6 Cyl. Gas	
			EV0 = All 4.7L Gas	

Supension, Rear,with Spring,Shocks and Control Arms
Figure 17-110

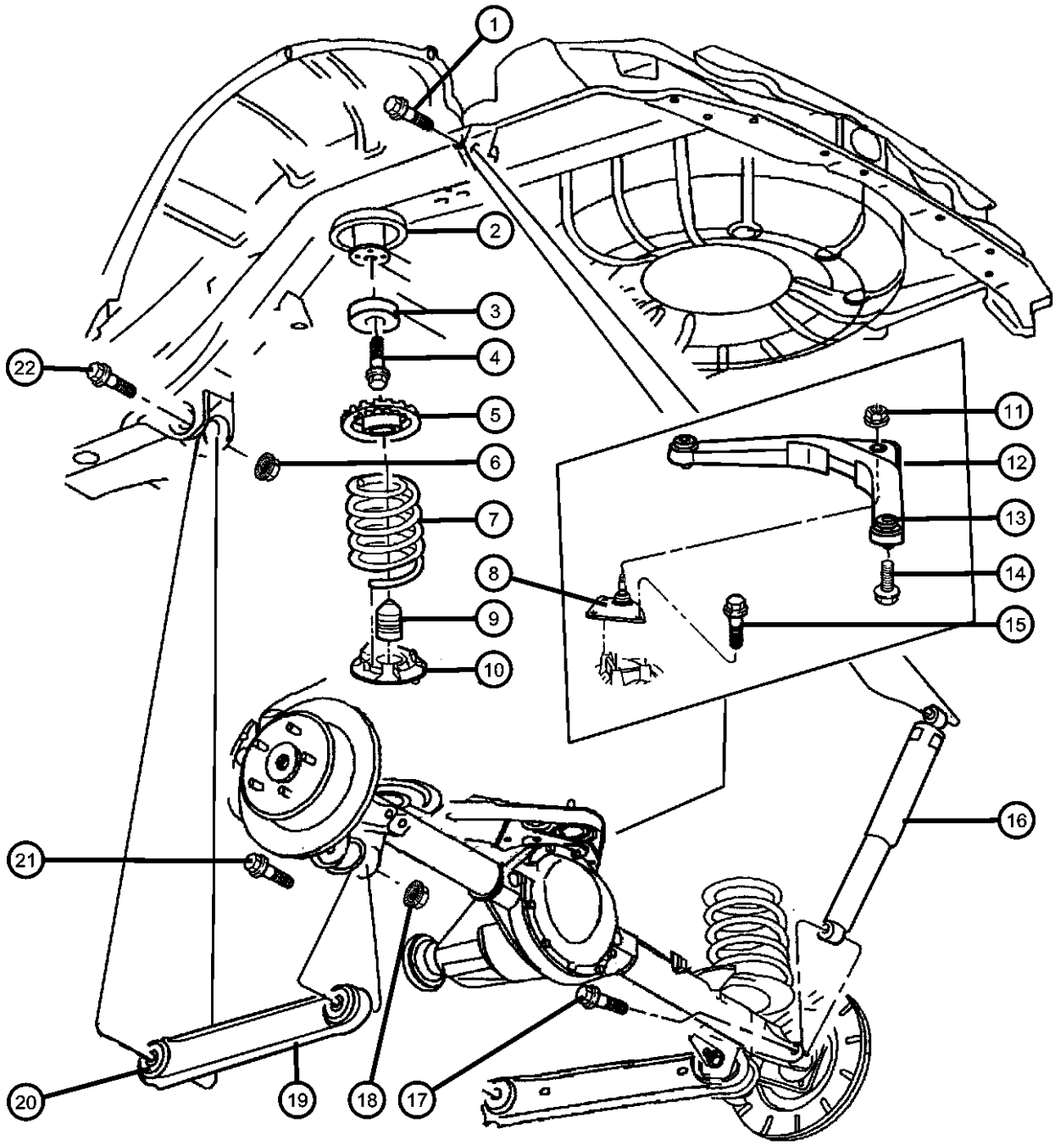

ITEM	PART NUMBER	QTY	LINE	SERIES	BODY	ENGINE	TRANS	TRIM	DESCRIPTION
	0SG23339								Mopar V-Line Alternative Part
	52088235AC	2							[SDU]
	0SG23339								Mopar V-Line Alternative Part
17	06505935AA	2							SCREW, Shock Mounting, Lower
18	06502698	3							NUT, Hex Flange Lock, Control Arm to Axle Mounting, Lower
19	52088355AB	2							ARM, Control
20	52088220	2							BUSHING, Control Arm, Control Arm to Body
21	06505214AA	2							SCREW, Hex Flange Head, M14x2.00x114, Control Arm to Axle Mounting, Lower
22	06506033AA	2							BOLT, Hex Flange Head, M14x2.00x105.00, Control Arm to Body Mounting, Lower
-23	06505439AA	1							NUT AND RETAINER, Hex Flange Locking, M14 x 2.00, Control Arm to Body, Lower

GRAND CHEROKEE (WJ)

SERIES	LINE	BODY	ENGINE	TRANSMISSION
H = Laredo M = Sport P = Limited S = Overland	T = JEEP - 2WD J = JEEP - 4WD U = JEEP - 4WD (RHD)	74 = SPORT UTILITY 4-DR	ERH = Engine - 4.0L Power Tech I-6 EVA = Engine- 4.7L V8 MPI EVC = Engine - 4.7L HO V8 MPI ER0 = All 4.0L 6 Cyl. Gas EV0 = All 4.7L Gas	DGK = 4 Speed Auto, 42RE DGQ = 5 Speed Auto, 45RFE DG0 = All Automatic Transmissions

AR = use ase required - = Non illustrrated part

Stabilizer Bar, Rear
Figure 17-210

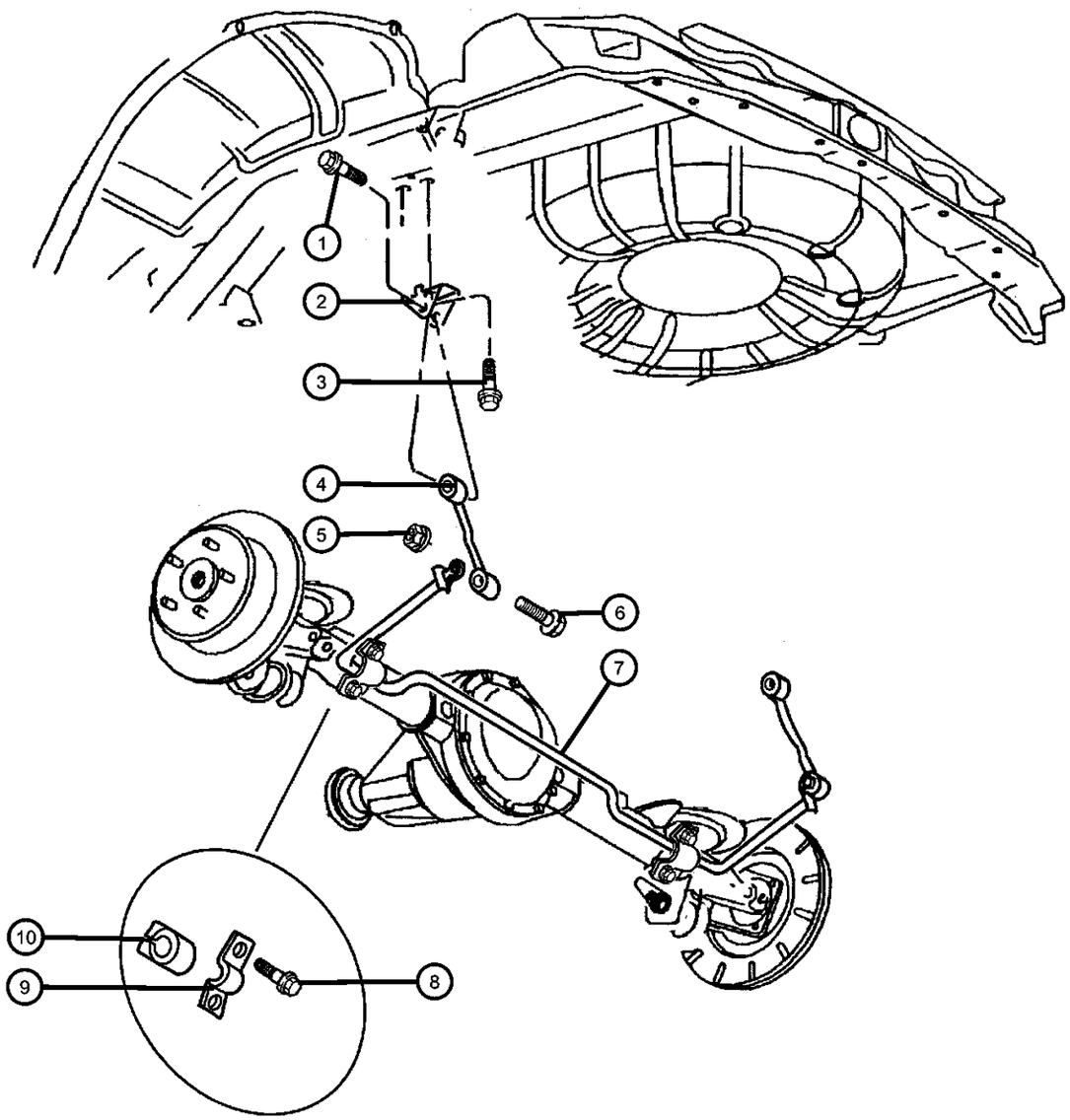

ITEM	PART NUMBER	QTY	LINE	SERIES	BODY	ENGINE	TRANS	TRIM	DESCRIPTION
1	06505935AA	2							SCREW, Sway Bar Link to Sill Bracket, Mounting
2	52088525AB	2							BRACKET, Suspension
3	52088525AB	2							SCREW AND WASHER, Hex Head, M10-1.50x30, (NOT SERVICED)
4	52088319AB	2							LINK, Sway Eliminator
5	06502696	2							NUT, Hex Flange Lock, M14x1.50, Sway Bar Link to Sway Bar, Mounting
6	06503726	2							SCREW, Shoulder, Sway Bar Link to Sway Bar, Mounting
7	52088739AB	1							STABILIZER BAR, Rear Suspension
8	06503571	4							SCREW AND WASHER, M10x1.50x35
9	52087865	2							RETAINER, Stabilizer Bar Grommet
10	52088738AD	2							BUSHING, Stabilizer Bar

GRAND CHEROKEE (WJ)

SERIES	LINE	BODY	ENGINE	TRANSMISSION
H = Laredo	T = JEEP - 2WD	74 = SPORT UTILITY 4-DR	ERH = Engine - 4.0L Power Tech I-6	DGK = 4 Speed Auto, 42RE
M = Sport	J = JEEP - 4WD		EVA = Engine- 4.7L V8 MPI	DGQ = 5 Speed Auto, 45RFE
P = Limited	U = JEEP - 4WD (RHD)		EVC = Engine - 4.7L HO V8 MPI	DG0 = All Automatic Transmissions
S = Overland			ER0 = All 4.0L 6 Cyl. Gas	
			EV0 = All 4.7L Gas	

Group - 19

Steering

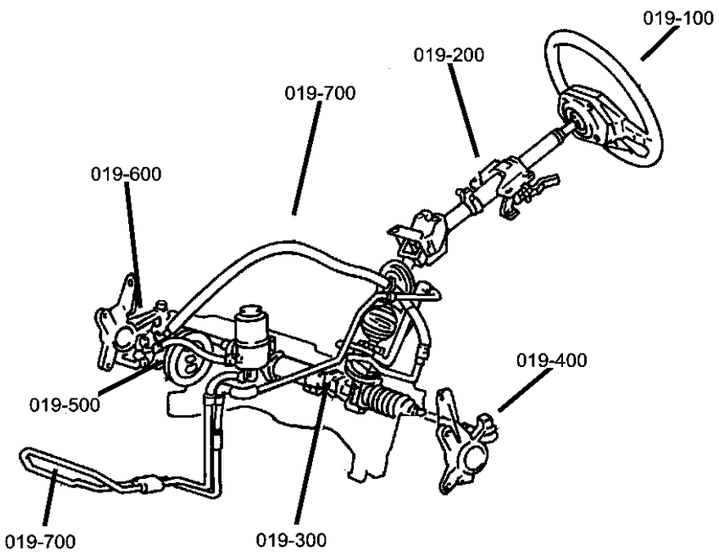

019-100 Steering Wheel 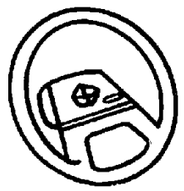	**019-200** Steering Column 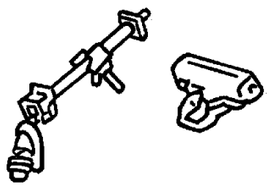	**019-300** Steering Gear 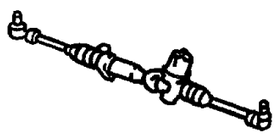	**019-400** Steering Linkage 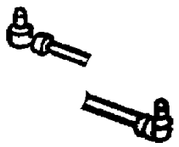
019-500 Power Steering Pump 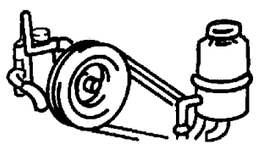	**019-700** Power Steering Hoses 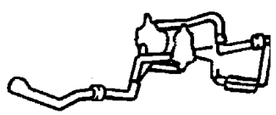		

Group - 19 Steering

Illustration Title — Group-Fig. No.

Steering Wheel
Steering Wheel Assembly ..... Fig. 19 - 110

Steering Column
Steering Column Assy ..... Fig. 19 - 210

Steering Gear
Steering Gear ..... Fig. 19 - 310

Steering Linkage
Steering Linkage ..... Fig. 19 - 410

Power Steering Pump
Power Steering Pump ..... Fig. 19 - 510

Power Steering Hoses
Power Steering Hoses-4.0L [ER0] Engine ..... Fig. 19 - 710
Power Steering Hoses 4.7L [EV0] ..... Fig. 19 - 720

Steering Wheel Assembly
Figure 19-110

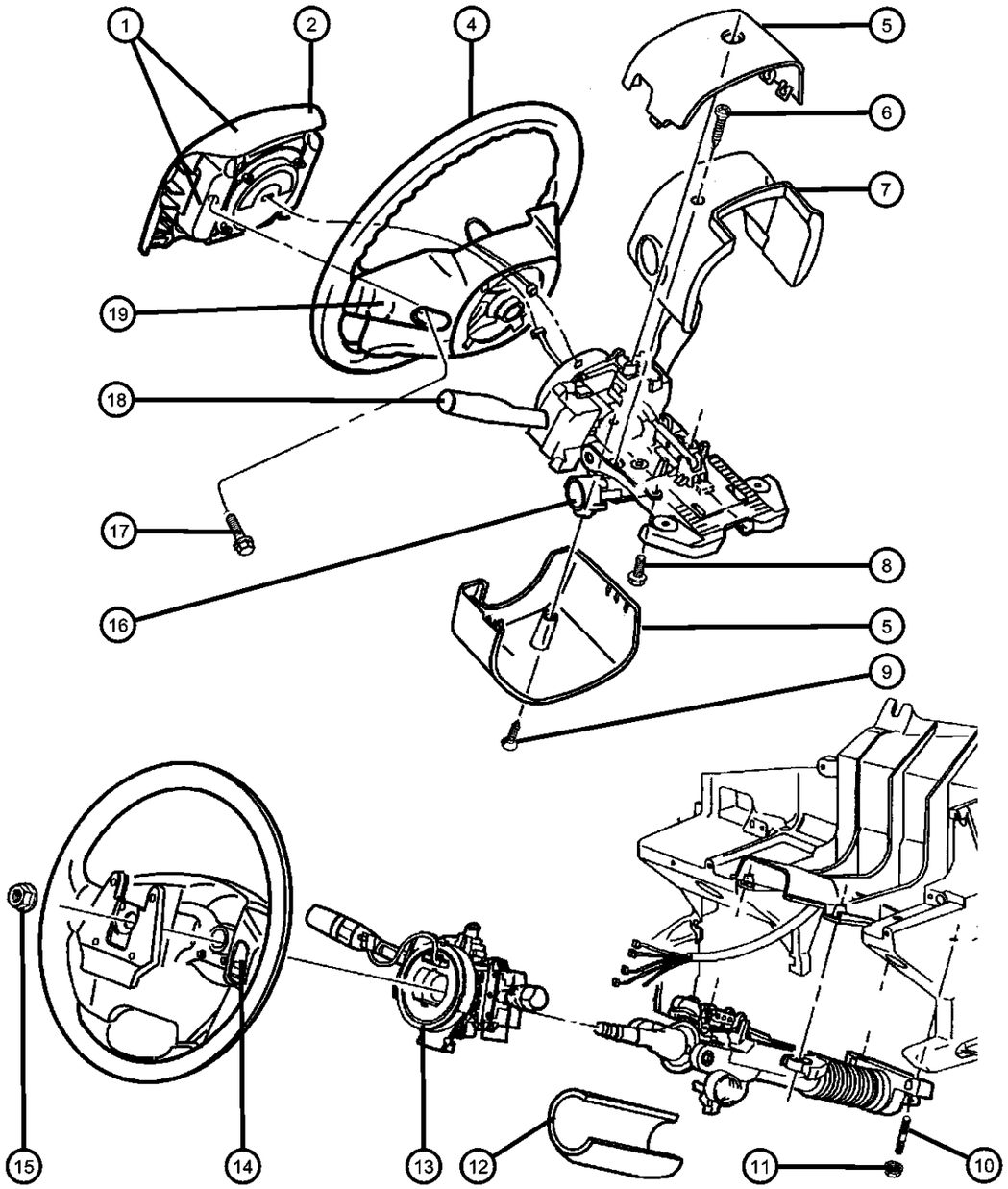

ITEM	PART NUMBER	QTY	LINE	SERIES	BODY	ENGINE	TRANS	TRIM	DESCRIPTION
Note: Sales Codes; [DG0]=Transmissions - All Automatic [SCA]=Steering Wheel [SCL]=Steering Wheel - Leather Wrapped [SCW]=Steering Wheel - Wood/Leather Wrapped									
1									AIR BAG, Driver
	5GV61WL8AA	1		P					Very Dark Brown
	5GV61XDVAA	1		P					Dark Slate Gray
		1		H					Dark SlateGray
		1		S					Dark Quartz
	5GV61XTMAA	1		P					Sandstone
2									COVER, Air Bag Module
	0WH20WL8AA	1		P					Includes Horn Switch-[L5]
	0WH20XD-VAA	1		P					Includes Horn Switch-[DV]
		1		H					Includes Horn Switch-[DV]
		1		S					Includes Horn Switch-[DV]
	0WH20XTMAA	1		P					Includes Horn Switch-[T5]
-3									SWITCH, Horn
	05014533AA	1		P					with Mounting Hardware
		1		H					with Mounting Hardware
		1		S					with Mounting Hardware
4									WHEEL, Steering
	0WB611DVAA	1		H					[SCL] Dark Quartz
		1		P					[SCL] Dark Quartz
	0WB611L8AA	1		P					[SCL] Very Dark Brown
	0WB611TMAA	1		P					[SCL] Black
	5GV251DVAB	1							[SCW] Dark Quartz
	5HM231DVAB	1							[SCA] Dark Quartz
5									SHROUD, Steering Column
	5GE40WL8AB	1		P					Very Dark Brown, Upper And Lower
	5GE40XDVAB	1		H					Dark Quartz, Upper And Lower
		1		P					Dark Quartz, Upper And Lower
		1		S					Dark Quartz, Upper And Lower
	5GE40XTMAB	1		P					Black, Upper And Lower

GRAND CHEROKEE (WJ)

SERIES	LINE	BODY	ENGINE	TRANSMISSION
H = Laredo M = Sport P = Limited S = Overland	T = JEEP - 2WD J = JEEP - 4WD U = JEEP - 4WD (RHD)	74 = SPORT UTILITY 4-DR	ERH = Engine - 4.0L Power Tech I-6 EVA = Engine- 4.7L V8 MPI EVC = Engine - 4.7L HO V8 MPI ER0 = All 4.0L 6 Cyl. Gas EV0 = All 4.7L Gas	DGK = 4 Speed Auto, 42RE DGQ = 5 Speed Auto, 45RFE DG0 = All Automatic Transmissions

Steering Wheel Assembly
Figure 19-110

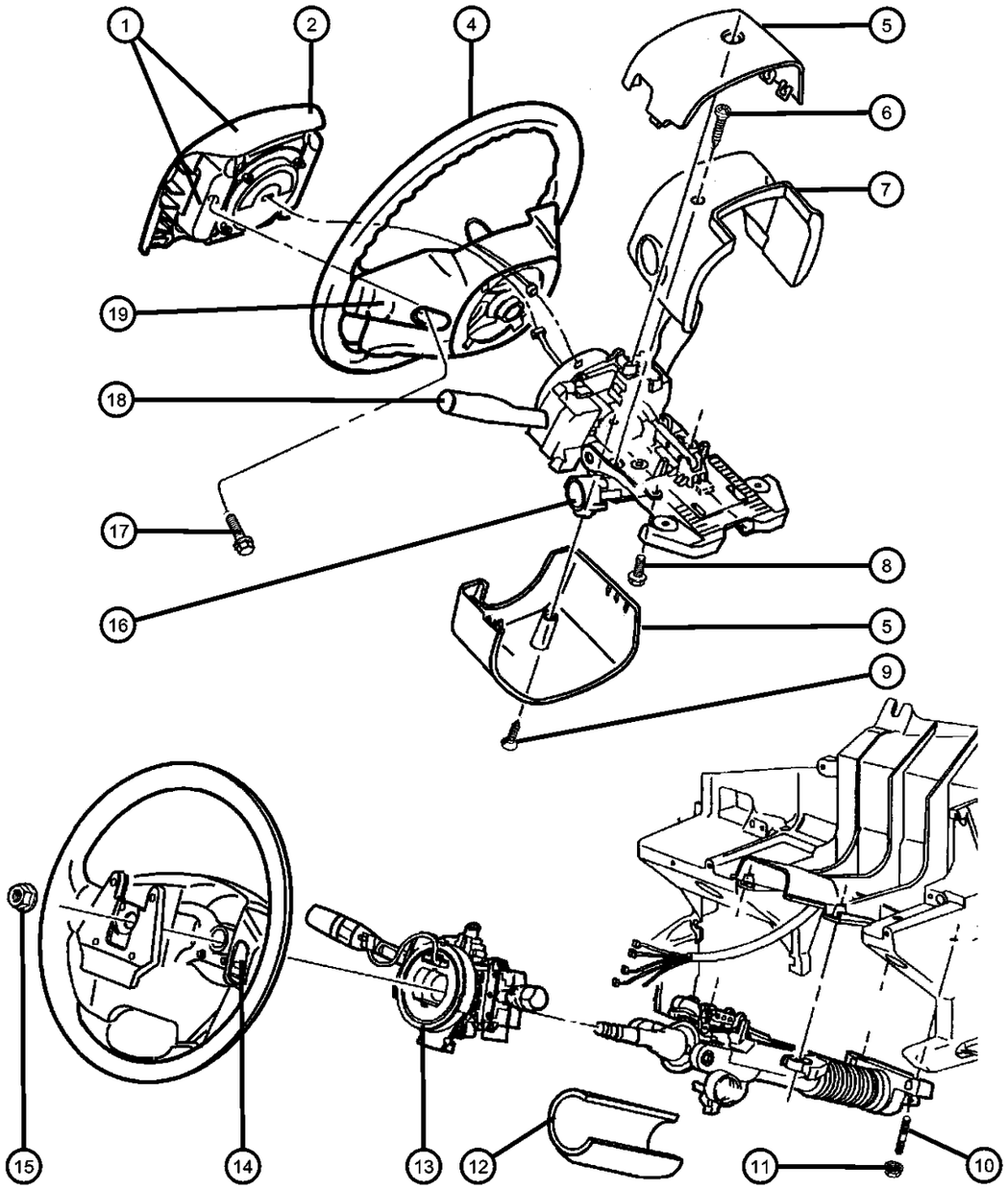

ITEM	PART NUMBER	QTY	LINE	SERIES	BODY	ENGINE	TRANS	TRIM	DESCRIPTION
6	06035142	2							SCREW, .164-32x1.00, Shroud to Column, Mounting
7									SHROUD, Steering Column
	5GE39WL8AA	1		P			DG0		Fixed-Very Dark Brown, Upper
	5GE39XDVAA	1		H			DG0		Fixed-Dark Quartz, Upper
		1		P			DG0		Fixed-Dark Quartz, Upper
		1		S			DG0		Fixed-Dark Quartz, Upper
	5GE39XTMAA	1		P			DG0		Fixed-Black, Upper
8	06505513AA	1							SCREW, Tapping, M4x0.7x14, Smart Key Immobilizer Module, Mounting
9	06034678	1							SCREW, Self Piercing, .164-15-1, Shroud to Shroud, Mounting
10	06034678	1							STUD, M6x1.00mmx48.80mm, (NOT SERVICED)
11	06503014	4							NUT AND WASHER, Hex, M6x1, Steering Column, Mounting
12	04690413	2							COVER, Steering Wheel
13	56042770AD	1							CLOCKSPRING
14									SWITCH, Speed Control
	56042310AC	1							[SCA], Right
	56042311AC	1							[SCA], Left
	5GY381DVAA	1							[SCW] Dark Quartz, Right
		1		H					[SCL] Dark Quartz, Right
		1		P					[SCL] Dark Quartz, Right
	5GY381L8AA	1		P					[SCL] Very Dark Brown, Right
	5GY381TMAA	1		P					[SCL] Black, Right
	5GY391DVAA	1							[SCW] Dark Quartz, Left
		1		H					[SCL] Dark Quartz, Left
		1		P					[SCL] Dark Quartz, Left
	5GY391L8AA	1		P					[SCL] Very Dark Brown, Left
	5GY391TMAA	1		P					[SCL] Black, Left
15	06505248AA	1							NUT, Hex Flange Lock
16	04686665AB	1							MODULE, Immobilizer
17	06506091AA	2							SCREW, M6x1x25, Air Bag to Steering Wheel, Mounting

GRAND CHEROKEE (WJ)

SERIES	LINE	BODY	ENGINE	TRANSMISSION
H = Laredo M = Sport P = Limited S = Overland	T = JEEP - 2WD J = JEEP - 4WD U = JEEP - 4WD (RHD)	74 = SPORT UTILITY 4-DR	ERH = Engine - 4.0L Power Tech I-6 EVA = Engine- 4.7L V8 MPI EVC = Engine - 4.7L HO V8 MPI ER0 = All 4.0L 6 Cyl. Gas EV0 = All 4.7L Gas	DGK = 4 Speed Auto, 42RE DGQ = 5 Speed Auto, 45RFE DG0 = All Automatic Transmissions

AR = use ase required - = Non illustrrated part

Steering Wheel Assembly
Figure 19-110

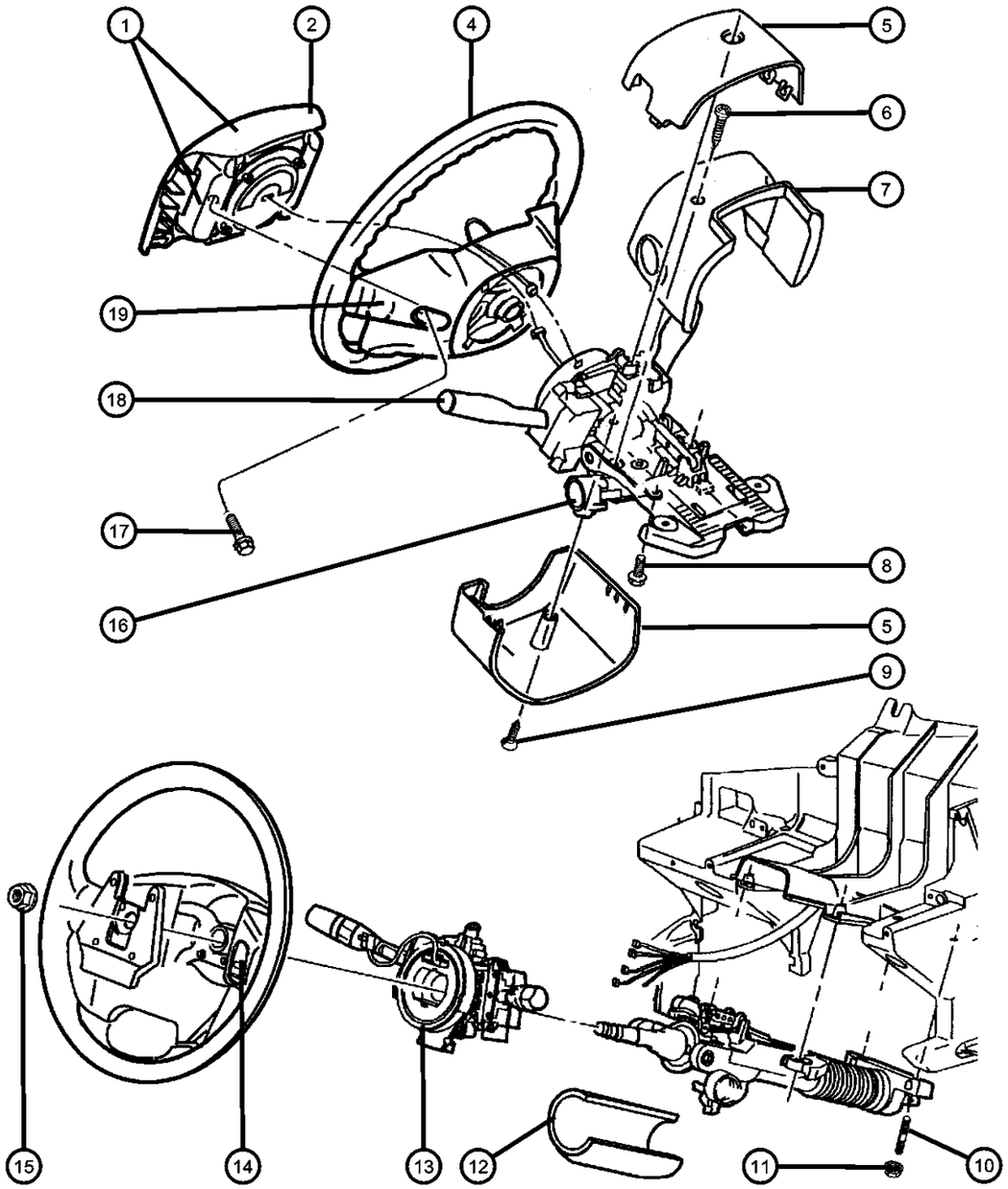

ITEM	PART NUMBER	QTY	LINE	SERIES	BODY	ENGINE	TRANS	TRIM	DESCRIPTION
18	04690595AA	1							LEVER, Steering Column
19									SWITCH, Remote Radio
	56042312AB	1							[SCW], Right
		1		H					[SCL], Right
		1		P					[SCL], Right
	56042313AB	1		H					[SCL], Left
		1		P					[SCL], Left
		1							[SCW], Left
-20	04595749AA	1							LABEL, Air Bag Warning
-21									WIRING, Steering Wheel
	56042934AA	1		H					[SCL]
		1		P					[SCL]
		1							[SCW]
	56042937AA	1							[SCA]
-22	56042297AD	1							HOUSING, Switch, with Turn Signal Cancelling Cam, Mulitfunction

GRAND CHEROKEE (WJ)

SERIES	LINE	BODY	ENGINE	TRANSMISSION
H = Laredo	T = JEEP - 2WD	74 = SPORT UTILITY 4-DR	ERH = Engine - 4.0L Power Tech I-6	DGK = 4 Speed Auto, 42RE
M = Sport	J = JEEP - 4WD		EVA = Engine- 4.7L V8 MPI	DGQ = 5 Speed Auto, 45RFE
P = Limited	U = JEEP - 4WD (RHD)		EVC = Engine - 4.7L HO V8 MPI	DG0 = All Automatic Transmissions
S = Overland			ER0 = All 4.0L 6 Cyl. Gas	
			EV0 = All 4.7L Gas	

AR = use ase required - = Non illustrrated part

Steering Column Assy
Figure 19-210

ITEM	PART NUMBER	QTY	LINE	SERIES	BODY	ENGINE	TRANS	TRIM	DESCRIPTION
1	55115970AE	1							COLUMN, Steering, Tilt
2	55115970AE	1							STUD, M6x1.00mmx48.80mm, (NOT SERVICED)
3	06503014	4							NUT AND WASHER, Hex, M6x1, Steering Column, Mounting
4	04690488	1							HOUSING, Steering Column Lock, Holds Cylinder and Key
-5	04690023	2							SCREW, Pan Head, .25-20x.62, Ignition Lock Housing, Mounting
6	06505248AA	1							NUT, Hex Flange Lock, Steering Wheel, Mounting

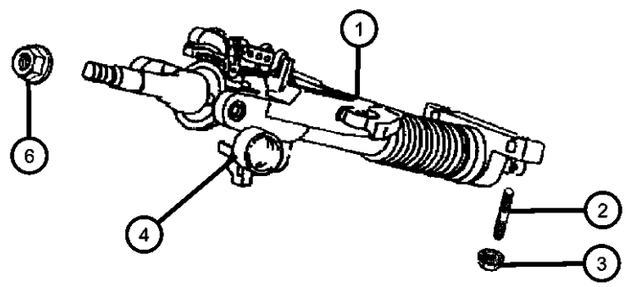

GRAND CHEROKEE (WJ)

SERIES	LINE	BODY	ENGINE	TRANSMISSION
H = Laredo M = Sport P = Limited S = Overland	T = JEEP - 2WD J = JEEP - 4WD U = JEEP - 4WD (RHD)	74 = SPORT UTILITY 4-DR	ERH = Engine - 4.0L Power Tech I-6 EVA = Engine- 4.7L V8 MPI EVC = Engine - 4.7L HO V8 MPI ER0 = All 4.0L 6 Cyl. Gas EV0 = All 4.7L Gas	DGK = 4 Speed Auto, 42RE DGQ = 5 Speed Auto, 45RFE DG0 = All Automatic Transmissions

Steering Gear
Figure 19-310

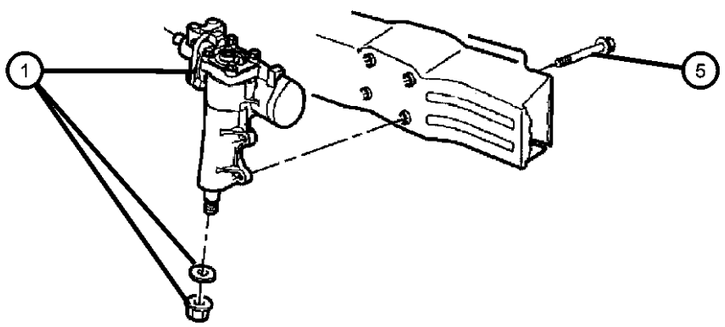

ITEM	PART NUMBER	QTY	LINE	SERIES	BODY	ENGINE	TRANS	TRIM	DESCRIPTION
1	52088272AF	1							GEAR, Power Steering
-2	05014667AA	1							SEAL KIT, Steering Gear Housing
-3	05014665AA	1							SEAL KIT, Steering Gear
-4	05014671AA	1							SEAL KIT, Steering gear pitman shaft
5	06504965AA	4							SCREW, Hex Head, Steering Gear to Sill, Mounting

GRAND CHEROKEE (WJ)

SERIES	LINE	BODY	ENGINE	TRANSMISSION
H = Laredo M = Sport P = Limited S = Overland	T = JEEP - 2WD J = JEEP - 4WD U = JEEP - 4WD (RHD)	74 = SPORT UTILITY 4-DR	ERH = Engine - 4.0L Power Tech I-6 EVA = Engine- 4.7L V8 MPI EVC = Engine - 4.7L HO V8 MPI ER0 = All 4.0L 6 Cyl. Gas EV0 = All 4.7L Gas	DGK = 4 Speed Auto, 42RE DGQ = 5 Speed Auto, 45RFE DG0 = All Automatic Transmissions

Steering Linkage
Figure 19-410

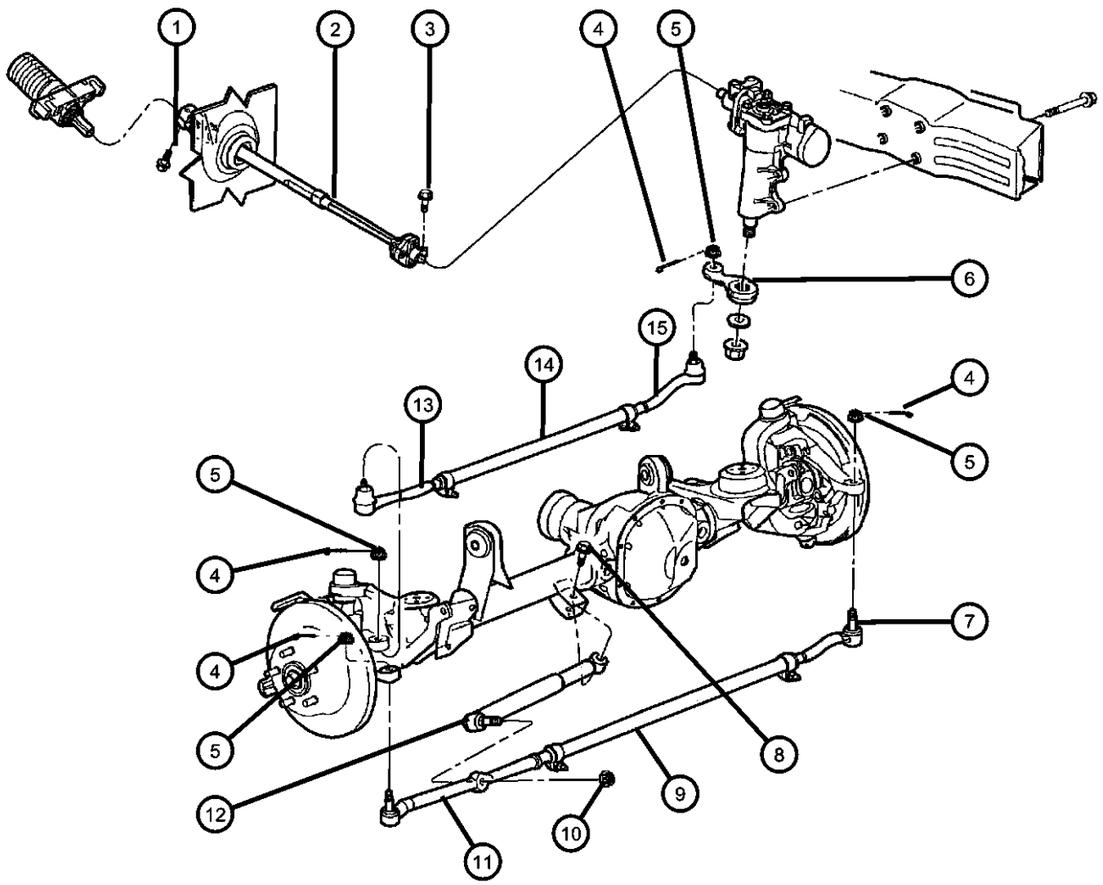

ITEM	PART NUMBER	QTY	LINE	SERIES	BODY	ENGINE	TRANS	TRIM	DESCRIPTION
1	06504926AA	2							SCREW, Hex Flange Head, M10x1.5x40, Intermediate Shaft to Steering Column
2	52088253AG	1							SHAFT, Intermediate
3	06504926AA	2							SCREW, Hex Flange Head, M10x1.5x40, Intermediate Shaft to Steering Gear
4									PIN, Cotter
	34202101	1							Drag Link to Knuckle
		1							Drag Link to Pitman Arm
		2							Tie Rod to Knuckle
5									NUT, Hex, .50-20
	06034358	1							Drag Link to Knuckle, Mounting
		1							Drag Link to Pitman Arm, Mounting
		2							Tie Rod to Knuckle, Mounting
6	52088242	1							ARM, Pitman
7	52088869AA	1							SOCKET, Tie Rod, Outer, to Knuckle, Left
8	06502473	1							BOLT, Hex Flange Head, M12x1.75x65, Steering Damper to Axle Bracket, Mounting
9	52088871AB	1							LINK, Steering, Adjuster Tube with Clamps
10	06505822AA	1							NUT, Damper Stud to Tie Rod, Mounting
11	52088870AA	1							SOCKET, Tie Rod, Outer, to Knuckle, Right
12	52088251AB	1							DAMPER, Steering
13	52088461	1							SOCKET, Tie Rod, Drag Link to Knuckle
14	52088463AB	1							LINK, Steering, Adjuster Tube with Clamps
15	52088511	1							SOCKET, Tie Rod, Drag Link to Pitman Arm

GRAND CHEROKEE (WJ)

SERIES	LINE	BODY	ENGINE	TRANSMISSION
H = Laredo	T = JEEP - 2WD	74 = SPORT UTILITY 4-DR	ERH = Engine - 4.0L Power Tech I-6	DGK = 4 Speed Auto, 42RE
M = Sport	J = JEEP - 4WD		EVA = Engine- 4.7L V8 MPI	DGQ = 5 Speed Auto, 45RFE
P = Limited	U = JEEP - 4WD (RHD)		EVC = Engine - 4.7L HO V8 MPI	DG0 = All Automatic Transmissions
S = Overland			ER0 = All 4.0L 6 Cyl. Gas	
			EV0 = All 4.7L Gas	

Power Steering Pump
Figure 19-510

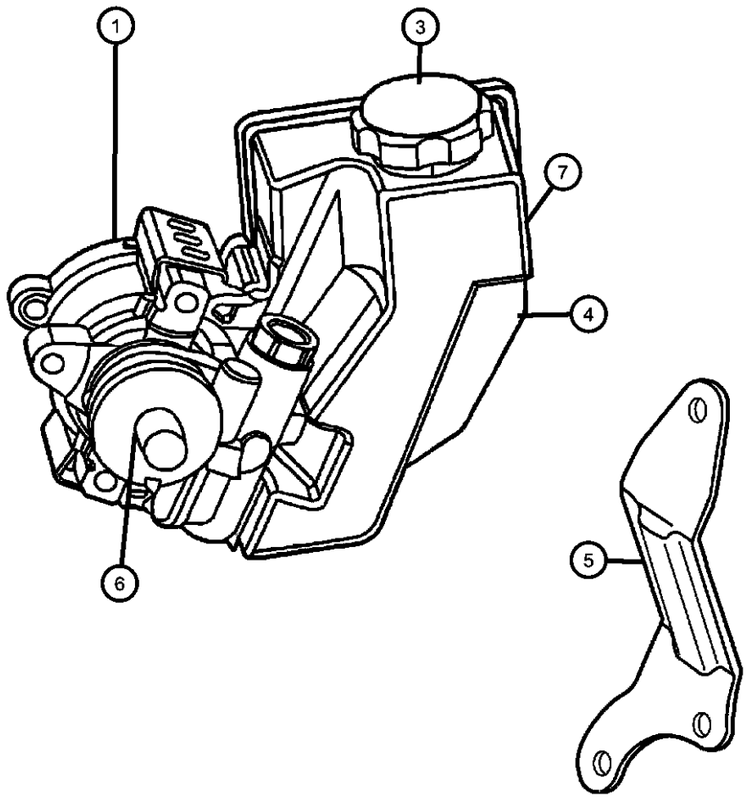

ITEM	PART NUMBER	QTY	LINE	SERIES	BODY	ENGINE	TRANS	TRIM	DESCRIPTION
Note: Sales Codes; [ER0] = 4.0L 6 Cyl Engine [EVC]=Engine - 4.7L Power Tech HO V8 [EV0] = 4.7L Gas Engine									
1	52089300AB	1				EV0			PUMP, Power Steering
-2	05080551AA	1				ER0			PUMP ASSEMBLY, Power Steering with Pulley
3									CAP, Power Steering Reservoir
	04897287AA	1				ER0			
	05073626AA	1				EV0			
4	05016184AA	1				ER0			RESERVOIR KIT, Power steering pump
5	04854157	1				ER0			BRACE, Power Steering Pump
6	04728247	1				ER0			SEAL, Power Steering Pump Shaft
7	05093219AA	1				EV0			RESERVOIR, Power Steering Pump
-8	53010258AB	1				ER0, EV0			PULLEY, Power Steering Pump
-9	06502425	3				ER0			SCREW AND WASHER, Hex Head, M8x1.25x95, Power Steering Pump and Brace, Mounting
-10	06102045AA	3				EV0			SCREW AND WASHER, Hex Head, Power Steering Pump, Mounting
-11	52088914AA	1				EV0			FITTING, Quick Disconnect
-12	05019705AA	1				EV0			O RING
-13	06101820	1				EVC			NUT, Hex Flange Lock, Power Steering Pump Brace to Water Pump, Mounting

GRAND CHEROKEE (WJ)

SERIES	LINE	BODY	ENGINE	TRANSMISSION
H = Laredo M = Sport P = Limited S = Overland	T = JEEP - 2WD J = JEEP - 4WD U = JEEP - 4WD (RHD)	74 = SPORT UTILITY 4-DR	ERH = Engine - 4.0L Power Tech I-6 EVA = Engine- 4.7L V8 MPI EVC = Engine - 4.7L HO V8 MPI ER0 = All 4.0L 6 Cyl. Gas EV0 = All 4.7L Gas	DGK = 4 Speed Auto, 42RE DGQ = 5 Speed Auto, 45RFE DG0 = All Automatic Transmissions

Power Steering Hoses-4.0L [ER0] Engine
Figure 19-710

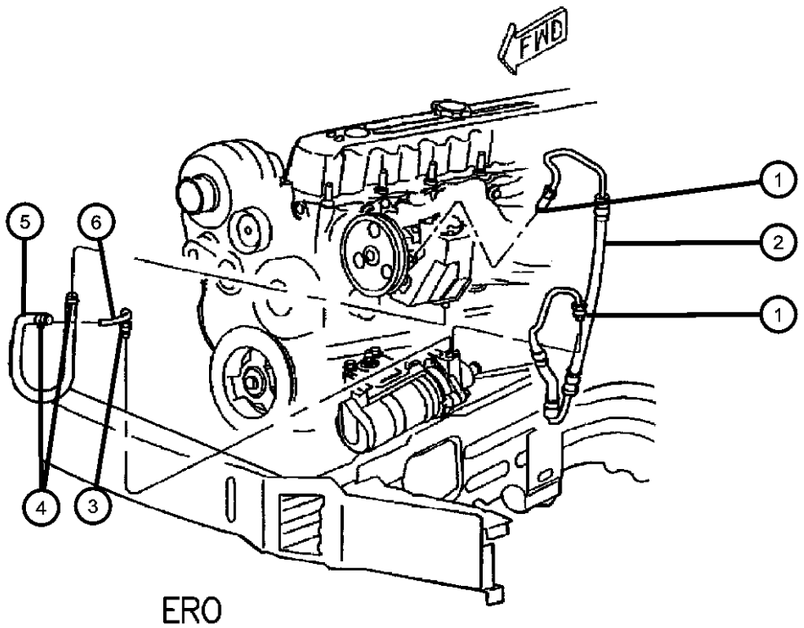

ITEM	PART NUMBER	QTY	LINE	SERIES	BODY	ENGINE	TRANS	TRIM	DESCRIPTION
Note: ER0=All 4.0L 6 Cylinder Gas Engine									
1	05205254	2				ER0			O RING, Power Steering Hose, As Required
2	52088452AD	1				ER0			HOSE, Power Steering Pressure, Includes Item 3
3	05205254	1							O RING, Power Steering Hose
4	02448761	1				ER0			CLAMP, Hose, As Required
5	52088774AA	1				ER0			HOSE, Power Steering Return, Includes Item 6
6	52088775AA	1				ER0			TUBE, Power Steering Return

GRAND CHEROKEE (WJ)

SERIES	LINE	BODY	ENGINE	TRANSMISSION
H = Laredo M = Sport P = Limited S = Overland	T = JEEP - 2WD J = JEEP - 4WD U = JEEP - 4WD (RHD)	74 = SPORT UTILITY 4-DR	ERH = Engine - 4.0L Power Tech I-6 EVA = Engine- 4.7L V8 MPI EVC = Engine - 4.7L HO V8 MPI ER0 = All 4.0L 6 Cyl. Gas EV0 = All 4.7L Gas	DGK = 4 Speed Auto, 42RE DGQ = 5 Speed Auto, 45RFE DG0 = All Automatic Transmissions

Power Steering Hoses 4.7L [EV0]
Figure 19-720

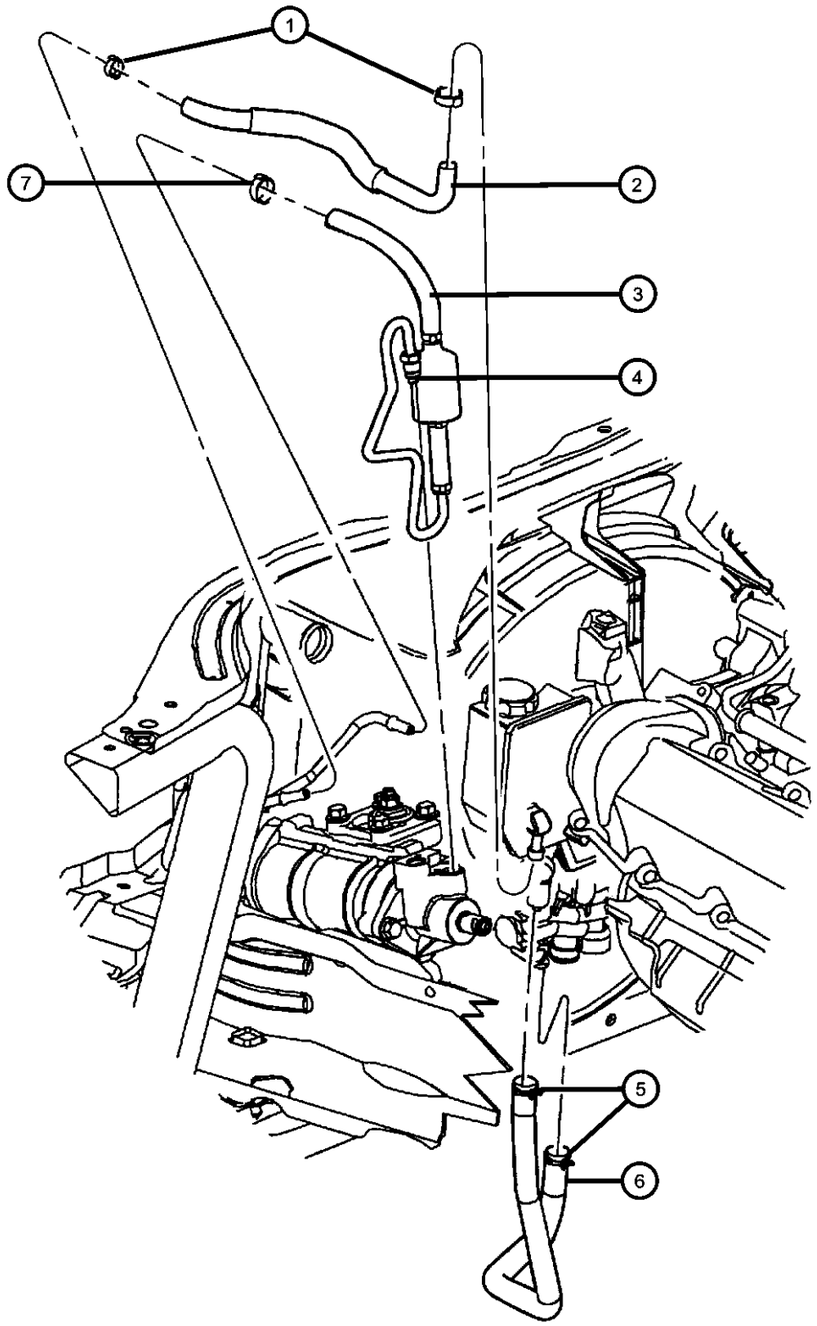

ITEM	PART NUMBER	QTY	LINE	SERIES	BODY	ENGINE	TRANS	TRIM	DESCRIPTION

Note:Sales Codes;
[EV0] = All 4.7L Engines
Note: For hoses that are attached to the Cooling Module,see Group 7.

1	02448770	2				EV0			CLAMP, Hose
2	52088922AE	1				EV0			HOSE, Power Steering Return
3	52088918AG	1				EV0			HOSE, Power Steering Return
4	05205254	2				EV0			O RING, Power Steering Hose
5	06502017	2				EV0			CLAMP, Heater Hose
6	52088916AB	1				EV0			HOSE, Power Steering Reservoir
7	06507233AA	1				EV0			CLAMP, Hose, Spring Type
-8	55116805AA	1				EV0			CLIP, Hose To Shroud, Mounting
-9	52079928AA	1				EV0			CLIP, Line
-10	05019708AB	1				EV0			HOSE PACKAGE, Hydraulic Fan, High Pressure P/S Line with 1 Fitting

GRAND CHEROKEE (WJ)

SERIES	LINE	BODY	ENGINE	TRANSMISSION
H = Laredo M = Sport P = Limited S = Overland	T = JEEP - 2WD J = JEEP - 4WD U = JEEP - 4WD (RHD)	74 = SPORT UTILITY 4-DR	ERH = Engine - 4.0L Power Tech I-6 EVA = Engine- 4.7L V8 MPI EVC = Engine - 4.7L HO V8 MPI ER0 = All 4.0L 6 Cyl. Gas EV0 = All 4.7L Gas	DGK = 4 Speed Auto, 42RE DGQ = 5 Speed Auto, 45RFE DG0 = All Automatic Transmissions

AR = use ase required - = Non illustrrated part

Group - 42RE

Automatic Transmission 4 Speed

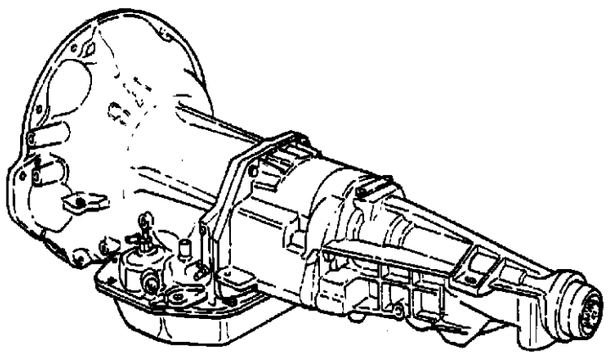

42RE-100 Transmission Assembly 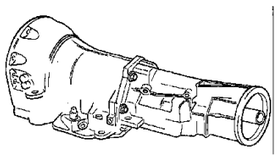	**42RE-1000** Overdrive Gear Train 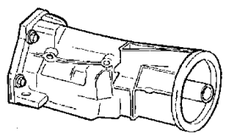	**42RE-1200** Gearshift Controls 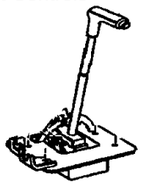	**42RE-200** Case and Extension 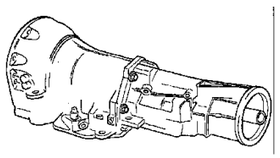
42RE-300 Oil Pump 	**42RE-400** Gear Train 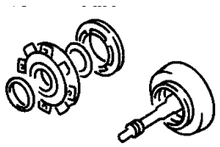	**42RE-500** Bands, Reverse and Kickdown 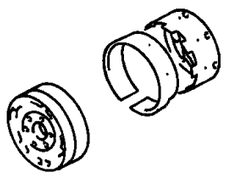	**42RE-700** Valve Body 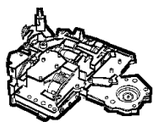

Group - 42RE Automatic Transmission 4 Speed

Illustration Title — Group-Fig. No.

Transmission Assembly
Transmission [42RE] [DGK] ..... Fig. 42RE - 110

Case and Extension
Case and Related Parts [42RE] [DGK] ..... Fig. 42RE - 210
Rear Case ..... Fig. 42RE - 220

Oil Pump
Oil Pump [42RE] [DGK] ..... Fig. 42RE - 310

Gear Train
Gear Train [42RE] [DGK] ..... Fig. 42RE - 410
Gear Train and Intermediate Shaft [42RE] [DGK] ..... Fig. 42RE - 420
Output Shaft [42RE] [DGK] ..... Fig. 42RE - 430

Bands, Reverse and Kickdown
Bands [42RE] [DGK] ..... Fig. 42RE - 510

Valve Body
Valve Body [42RE] [DGK] ..... Fig. 42RE - 710
Servos [42RE] [DGK] ..... Fig. 42RE - 720
Parking Sprag [42RE] [DGK] ..... Fig. 42RE - 730

Overdrive Gear Train
Overdrive Gear Train [42RE] [DGK] ..... Fig. 42RE - 1010

Gearshift Controls
Gearshift Controls [42RE] [DGK] ..... Fig. 42RE - 1210

Transmission [42RE] [DGK]
Figure 42RE-110

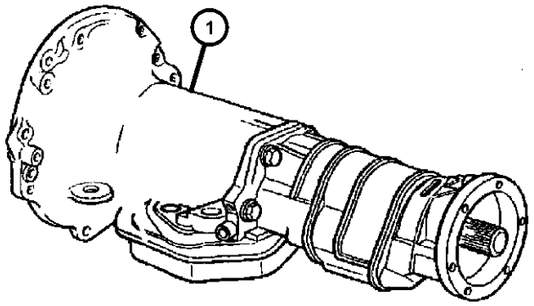

ITEM	PART NUMBER	QTY	LINE	SERIES	BODY	ENGINE	TRANS	TRIM	DESCRIPTION
NOTES: Sales Codes									
[DGK] = 4 Speed Automatic Transmissions [42RE]									
1									TRANSMISSION PACKAGE
	05015273AA	1	T				DGK		
	05015274AA	1	J				DGK		
-2									OVERDRIVE
	52118782	1	T				DGK		
	52118783AB	1	J				DGK		

GRAND CHEROKEE (WJ)

SERIES	LINE	BODY	ENGINE	TRANSMISSION
H = Laredo M = Sport P = Limited S = Overland	T = JEEP - 2WD J = JEEP - 4WD U = JEEP - 4WD (RHD)	74 = SPORT UTILITY 4-DR	ERH = Engine - 4.0L Power Tech I-6 EVA = Engine- 4.7L V8 MPI EVC = Engine - 4.7L HO V8 MPI ER0 = All 4.0L 6 Cyl. Gas EV0 = All 4.7L Gas	DGK = 4 Speed Auto, 42RE DGQ = 5 Speed Auto, 45RFE DG0 = All Automatic Transmissions

Case and Related Parts [42RE] [DGK]
Figure 42RE-210

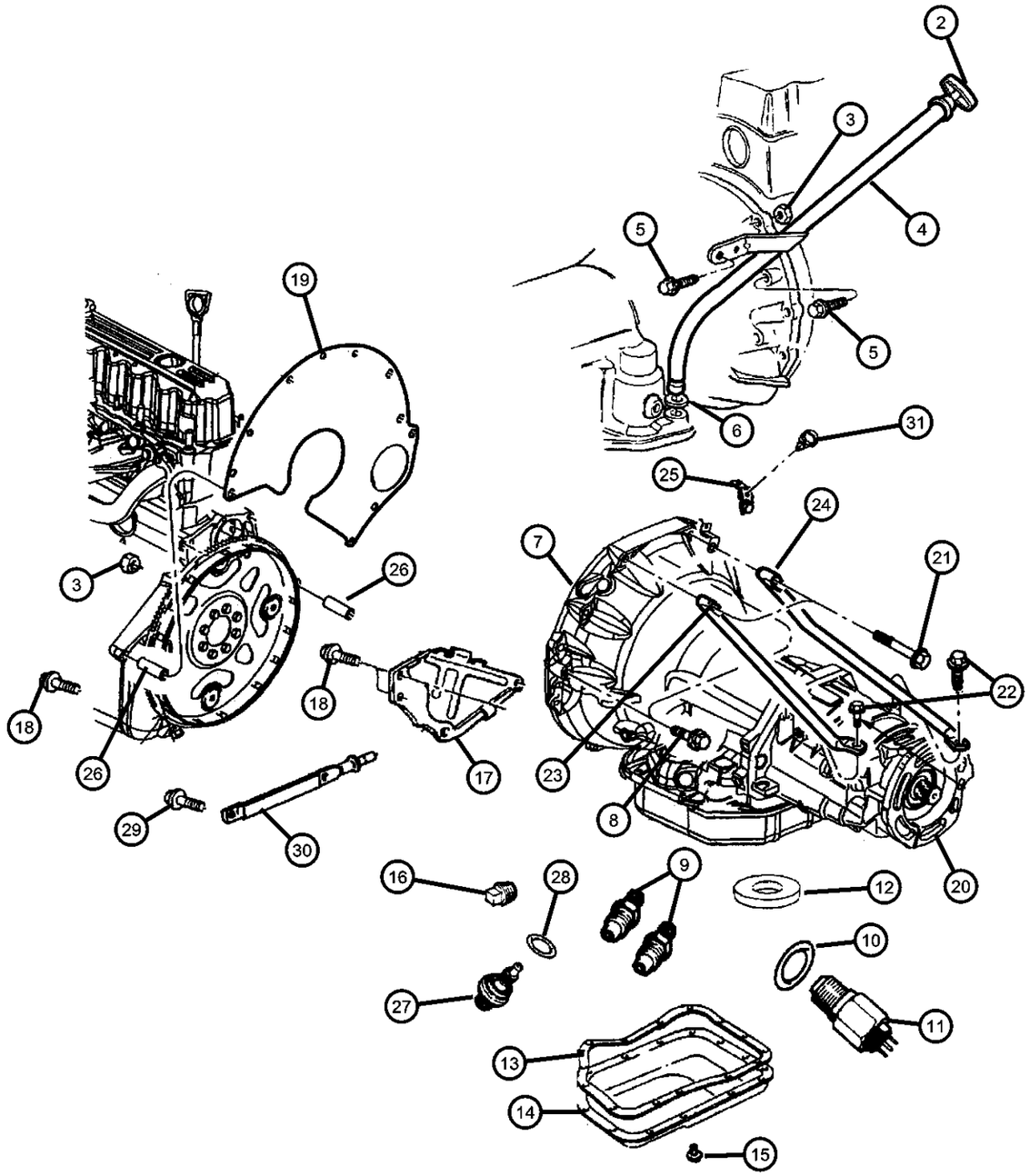

ITEM	PART NUMBER	QTY	LINE	SERIES	BODY	ENGINE	TRANS	TRIM	DESCRIPTION
NOTES: Sales Codes [DGK] = 4 Speed Automatic Transmissions [42RE] [DG0] = All Automatic Transmissions [ER0] = All 4.0L Gas Engines									
-1									SEAL AND GASKET PACKAGE, Transmission
	04863907AE	1	T				DGK		
		1	J				DGK		
2	52118641AC	1				ER0	DG0		INDICATOR, Transmission Fluid Level
3	J0219422	1					DGK		NUT, Hex
4	52104247	1					DGK		TUBE, Transmission Oil Filler
5	00153371	1					DGK		BOLT, Hex Head, .375-16x2.25
6	52118629AB	1				ER0	DG0		SEAL, Oil Filler Tube
7									CASE, Transmission
	52118291	1	T				DGK		
		1	J				DGK		
8	J4004370	2				ER0	DG0		BOLT AND WASHER, Hex Head, .437-14x2.75
9									NUT, Inverted Flare, .62-18
	06033879	2	T				DGK		
		2	J				DGK		
10									WASHER, Switch
	02408143	1	T				DGK		
		1	J				DGK		
11									SWITCH, Neutral, Safety, Back Up
	03747361	1	T				DGK		
		1	J				DGK		
12									MAGNET, Transmission
	03681601	1	J				DGK		
		1	T				DGK		
13									GASKET, Oil Pan
	04295875	1	T				DGK		
	04295875AB	1	J				DGK		
14									PAN, Transmission Oil
	52118779AB	1	T				DGK		

GRAND CHEROKEE (WJ)

SERIES	LINE	BODY	ENGINE	TRANSMISSION
H = Laredo M = Sport P = Limited S = Overland	T = JEEP - 2WD J = JEEP - 4WD U = JEEP - 4WD (RHD)	74 = SPORT UTILITY 4-DR	ERH = Engine - 4.0L Power Tech I-6 EVA = Engine- 4.7L V8 MPI EVC = Engine - 4.7L HO V8 MPI ER0 = All 4.0L 6 Cyl. Gas EV0 = All 4.7L Gas	DGK = 4 Speed Auto, 42RE DGQ = 5 Speed Auto, 45RFE DG0 = All Automatic Transmissions

AR = use ase required - = Non illustrrated part

Case and Related Parts [42RE] [DGK]
Figure 42RE-210

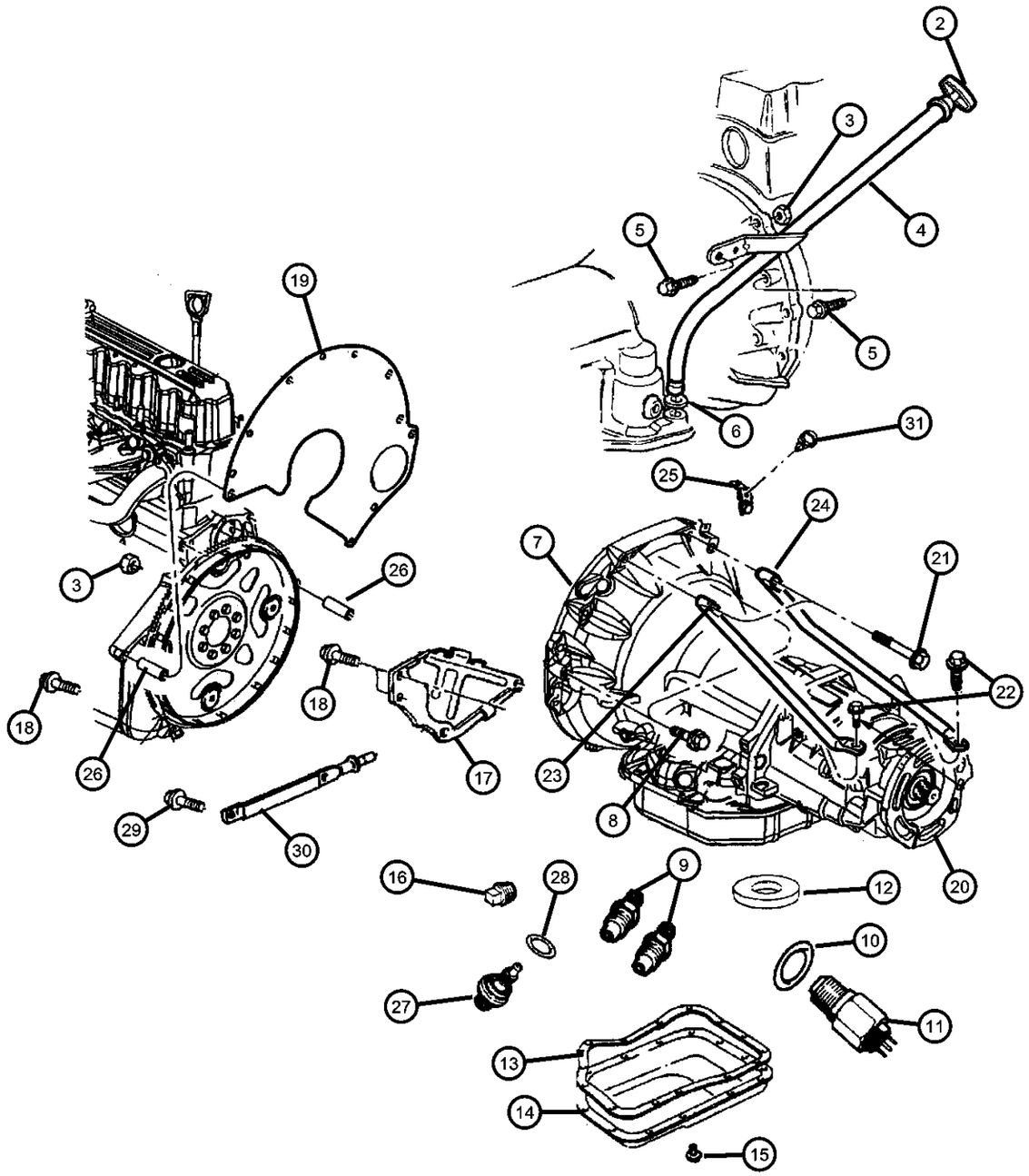

ITEM	PART NUMBER	QTY	LINE	SERIES	BODY	ENGINE	TRANS	TRIM	DESCRIPTION
		1	J				DGK		
15									SCREW
	06036330AA	14	T				DGK		
		14	J				DGK		
16									PLUG, Pressure Check
	06028095	1	T				DGK		
		1	J				DGK		
17	52118136AB	1				ER0	DG0		COVER, Converter
18									SCREW AND WASHER, Hex Head, .312-18x.625
	04723548	1	T				DGK		
		1	J				DGK		
19	J3237847	1				ER0	DG0		SPACER, Clutch Housing
20	05012428AA	1	J				DGK		ADAPTER, Transfer Case
21	06034242	2	J			ER0	DG0		SCREW AND WASHER
22	06027865	2	J			ER0	DG0		SCREW, .375-16x1.375
23	52104201	1	J			ER0	DG0		BRACE, Bending Transmission, Top Left
24	52104200	1	J			ER0	DG0		BRACE, Bending Transmission, Top Right
25	52104200	1							BRACKET, Tube, (NOT REQUIRED)
26	J4005148	2				ER0			DOWEL, Transmission
27									SENSOR, Transmission Output Speed
	04412879	1	T				DGK		
		1	J				DGK		
28									O RING, Trans Speed Sensor
	06501701	1	T				DGK		
		1	J				DGK		
29	06034498	2	J			ER0	DG0		SCREW AND WASHER, Hex Head, .312-18x1.25
30	52104250AA	1	J			ER0	DG0		BRACE, Bell Housing
31									CLIP
	52118181	1	T				DGK		
		1	J				DGK		

GRAND CHEROKEE (WJ)

SERIES	LINE	BODY	ENGINE	TRANSMISSION
H = Laredo M = Sport P = Limited S = Overland	T = JEEP - 2WD J = JEEP - 4WD U = JEEP - 4WD (RHD)	74 = SPORT UTILITY 4-DR	ERH = Engine - 4.0L Power Tech I-6 EVA = Engine- 4.7L V8 MPI EVC = Engine - 4.7L HO V8 MPI ER0 = All 4.0L 6 Cyl. Gas EV0 = All 4.7L Gas	DGK = 4 Speed Auto, 42RE DGQ = 5 Speed Auto, 45RFE DG0 = All Automatic Transmissions

AR = use ase required - = Non illustrrated part

Rear Case
Figure 42RE-220

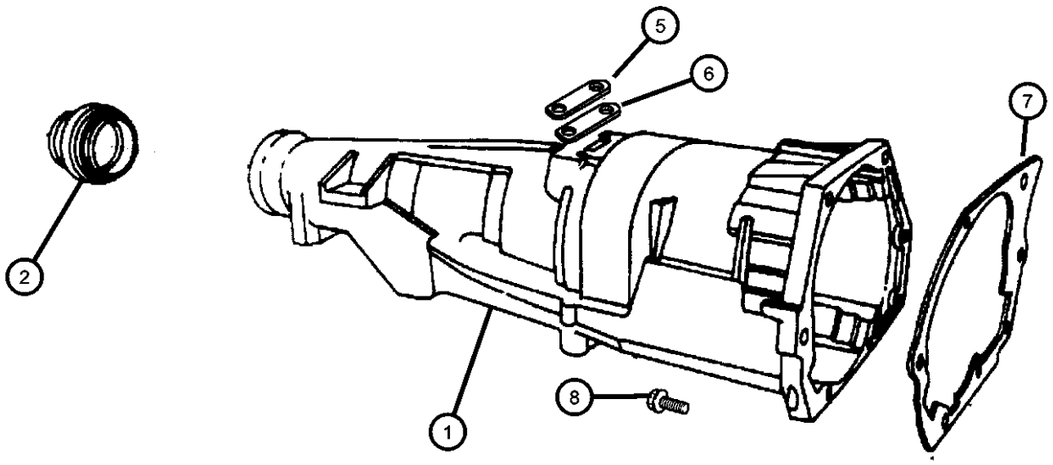

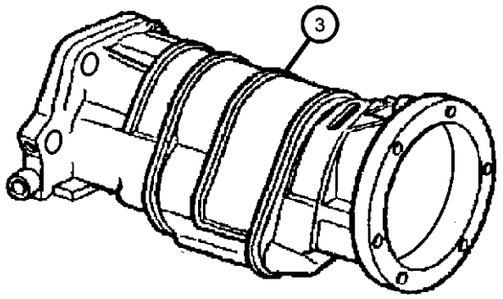

ITEM	PART NUMBER	QTY	LINE	SERIES	BODY	ENGINE	TRANS	TRIM	DESCRIPTION
NOTE:Sales Code: [DGK]=4 Speed Automatic Transmission - [42RE]									
1	05003231AA	1	T				DGK		CASE, Transmission Rear
2	04531216AB	1	T				DGK		SEAL, Output Shaft
3	05012428AA	1	J				DGK		ADAPTER, Transfer Case
-4	04269956AB	1	J				DGK		SEAL, Adapter
5									COVER, Transmission Converter
	02466957	1	T				DGK		
		1	J				DGK		
6									GASKET, Transmission
	02801398	1	T				DGK		
		1	J				DGK		
7									GASKET, Overdrive Piston Retainer
	04471564	1	T				DGK		
		1	J				DGK		
8									SCREW, Hex Flange Head, .375-16x1.38
	06036046AA	7	T				DGK		
		7	J				DGK		

GRAND CHEROKEE (WJ)

SERIES	LINE	BODY	ENGINE	TRANSMISSION
H = Laredo	T = JEEP - 2WD	74 = SPORT UTILITY 4-DR	ERH = Engine - 4.0L Power Tech I-6	DGK = 4 Speed Auto, 42RE
M = Sport	J = JEEP - 4WD		EVA = Engine- 4.7L V8 MPI	DGQ = 5 Speed Auto, 45RFE
P = Limited	U = JEEP - 4WD (RHD)		EVC = Engine - 4.7L HO V8 MPI	DG0 = All Automatic Transmissions
S = Overland			ER0 = All 4.0L 6 Cyl. Gas	
			EV0 = All 4.7L Gas	

Oil Pump [42RE] [DGK]
Figure 42RE-310

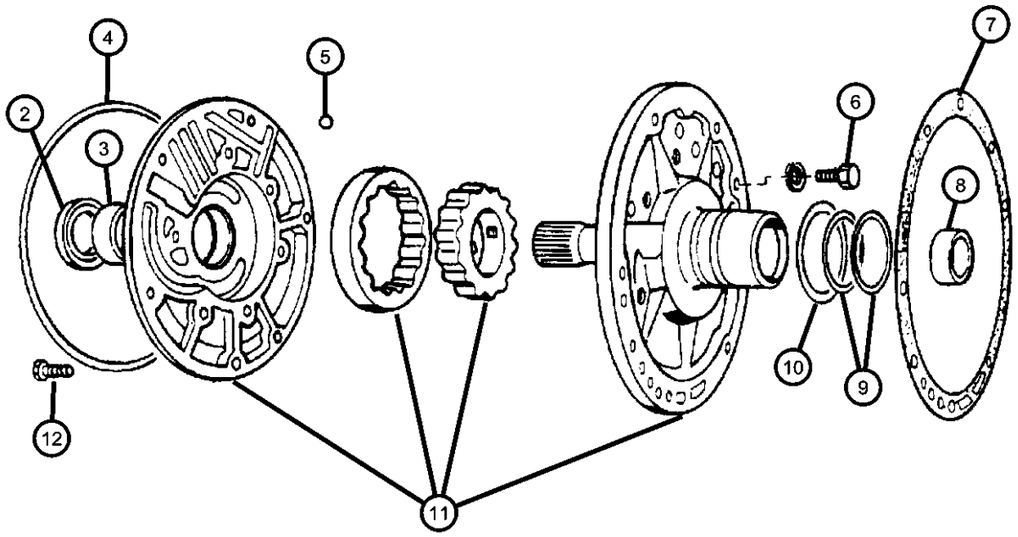

ITEM	PART NUMBER	QTY	LINE	SERIES	BODY	ENGINE	TRANS	TRIM	DESCRIPTION
-1									GASKET AND SEAL PACKAGE, Transmission Oil Pump
	04713108AB	1	T				DGK		
		1	J				DGK		
2									SEAL, Impeller Hub, 57.25mm OD
	04412475	1	T				DGK		
		1	J				DGK		
3									BUSHING, Front Pump
	02466796	1	T				DGK		
		1	J				DGK		
4									SEAL, Front Pump Housing
	02204709	1	T				DGK		
		1	J				DGK		
5									BALL, Valve Body Check
	00104918	1	T				DGK		
		1	J				DGK		
6									SCREW, Hex Head, .312-18x.687
	00179815	6	T				DGK		
		6	J				DGK		
7									GASKET, Transmission Oil Pump
	52118266	1	T				DGK		
		1	J				DGK		
8									BUSHING, Reaction Shaft
	04058635	1	T				DGK		
		1	J				DGK		
9									SEAL, Ring Reaction Support, 2 1/16 O.D.
	04471874	2	T				DGK		
		2	J				DGK		
10									THRUST WASHER, Front Clutch
	04617786	1	T				DGK		
		1	J				DGK		
11									PUMP, Transmission Oil
	04778552AB	1	T				DGK		

GRAND CHEROKEE (WJ)

SERIES	LINE	BODY	ENGINE	TRANSMISSION
H = Laredo	T = JEEP - 2WD	74 = SPORT UTILITY 4-DR	ERH = Engine - 4.0L Power Tech I-6	DGK = 4 Speed Auto, 42RE
M = Sport	J = JEEP - 4WD		EVA = Engine- 4.7L V8 MPI	DGQ = 5 Speed Auto, 45RFE
P = Limited	U = JEEP - 4WD (RHD)		EVC = Engine - 4.7L HO V8 MPI	DG0 = All Automatic Transmissions
S = Overland			ER0 = All 4.0L 6 Cyl. Gas	
			EV0 = All 4.7L Gas	

AR = use ase required - = Non illustrrated part

<< RETURN TO GROUP INDEX

Oil Pump [42RE] [DGK]
Figure 42RE-310

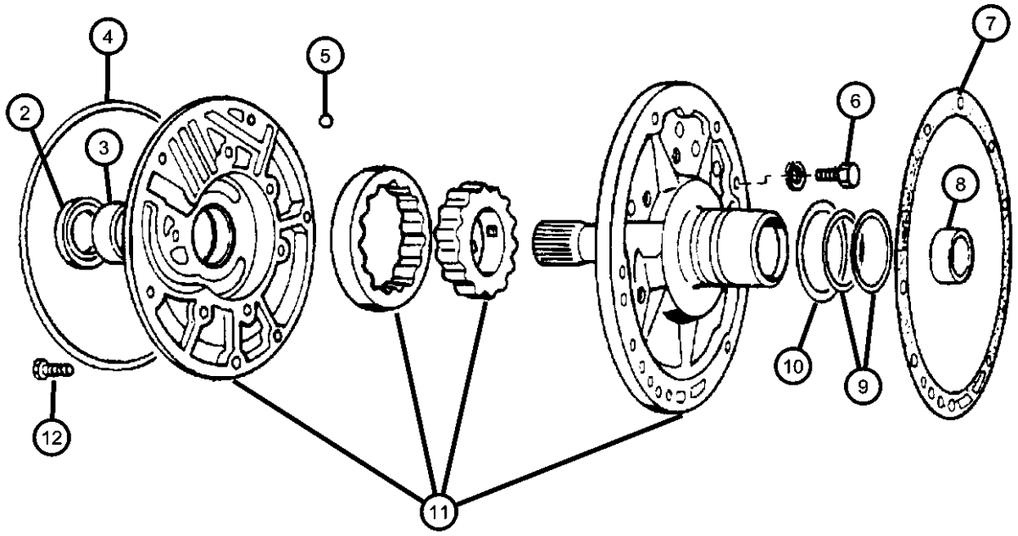

ITEM	PART NUMBER	QTY	LINE	SERIES	BODY	ENGINE	TRANS	TRIM	DESCRIPTION
		1	J				DGK		
12									SCREW AND WASHER, Hex Flange Head, .312-18x1.375
	06023943	6	T				DGK		
		6	J				DGK		

GRAND CHEROKEE (WJ)

SERIES	LINE	BODY	ENGINE	TRANSMISSION
H = Laredo	T = JEEP - 2WD	74 = SPORT UTILITY 4-DR	ERH = Engine - 4.0L Power Tech I-6	DGK = 4 Speed Auto, 42RE
M = Sport	J = JEEP - 4WD		EVA = Engine- 4.7L V8 MPI	DGQ = 5 Speed Auto, 45RFE
P = Limited	U = JEEP - 4WD (RHD)		EVC = Engine - 4.7L HO V8 MPI	DG0 = All Automatic Transmissions
S = Overland			ER0 = All 4.0L 6 Cyl. Gas	
			EV0 = All 4.7L Gas	

Gear Train [42RE] [DGK]
Figure 42RE-410

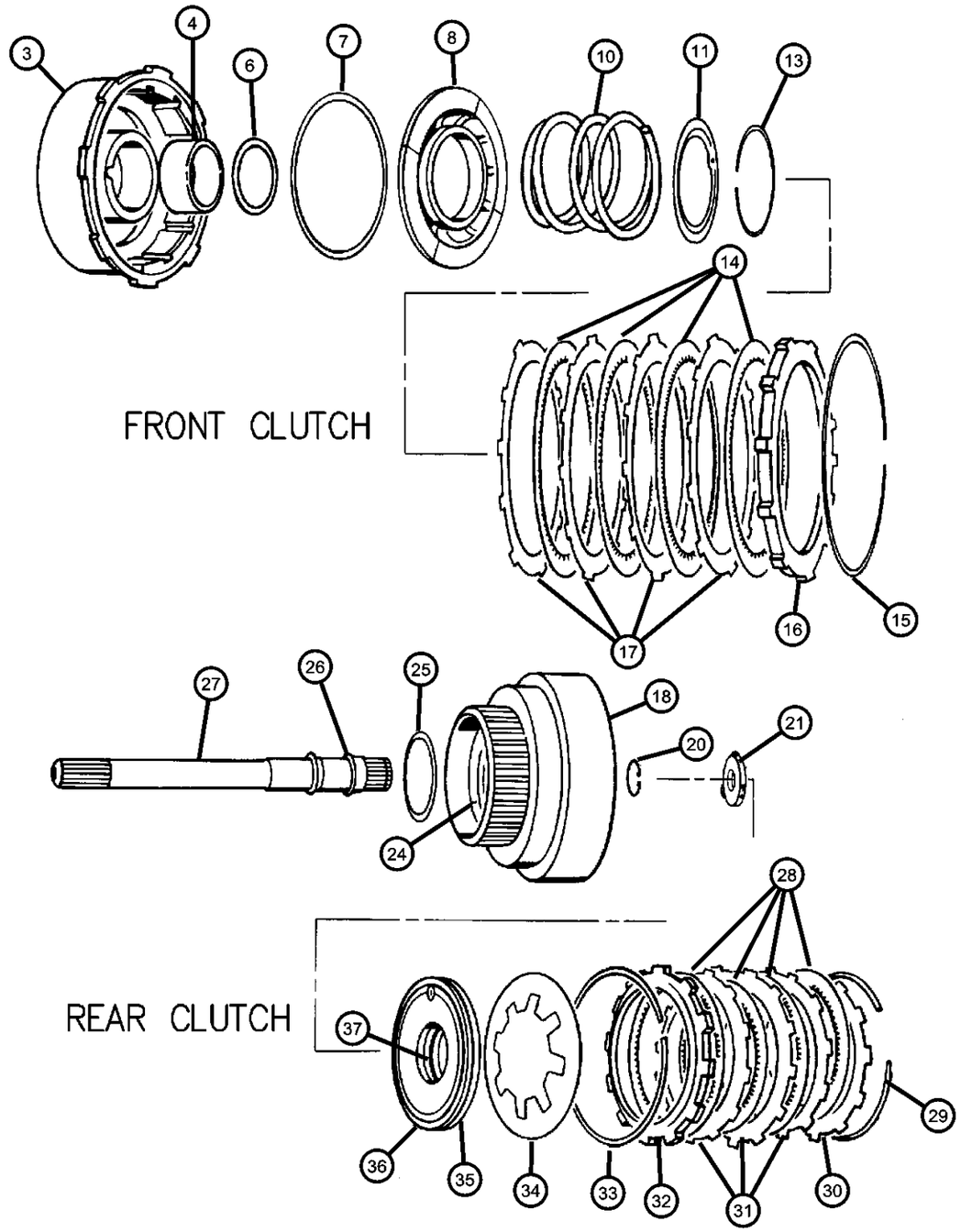

ITEM	PART NUMBER	QTY	LINE	SERIES	BODY	ENGINE	TRANS	TRIM	DESCRIPTION
-1									SEAL PACKAGE, Transmission Clutch
	05252926AB	1	T				DGK		
		1	J				DGK		
-2									SNAP RING PACKAGE, Transmission
	05014226AA	1	T				DGK		
		1	J				DGK		
3									RETAINER AND BUSHING, Transmission Front Clutch
	04531285AB	1	T				DGK		
		1	J				DGK		
4									BUSHING, Front Clutch
	04617157	1	T				DGK		
		1	J				DGK		
-5									BUSHING, Rear Clutch
	04617159	1	T				DGK		
		1	J				DGK		
6									SEAL, Front Clutch Piston
	03515176	1	T				DGK		
		1	J				DGK		
7									SEAL, Front Piston Clutch
	04058487AB	1	T				DGK		
		1	J				DGK		
8									PISTON, Clutch
	04617154AB	1	J				DGK		
		1	T				DGK		
-9									CHECK BALL, Dia-.187
	00147483	1	T				DGK		
		1	J				DGK		
10									SPRING, Front Clutch
	03515054	1	T				DGK		
		1	J				DGK		
11									RETAINER, Transmission Front Clutch Piston Spring
	04617516AC	1	T				DGK		

GRAND CHEROKEE (WJ)

SERIES	LINE	BODY	ENGINE	TRANSMISSION
H = Laredo M = Sport P = Limited S = Overland	T = JEEP - 2WD J = JEEP - 4WD U = JEEP - 4WD (RHD)	74 = SPORT UTILITY 4-DR	ERH = Engine - 4.0L Power Tech I-6 EVA = Engine- 4.7L V8 MPI EVC = Engine - 4.7L HO V8 MPI ER0 = All 4.0L 6 Cyl. Gas EV0 = All 4.7L Gas	DGK = 4 Speed Auto, 42RE DGQ = 5 Speed Auto, 45RFE DG0 = All Automatic Transmissions

AR = use ase required - = Non illustrrated part

Gear Train [42RE] [DGK]
Figure 42RE-410

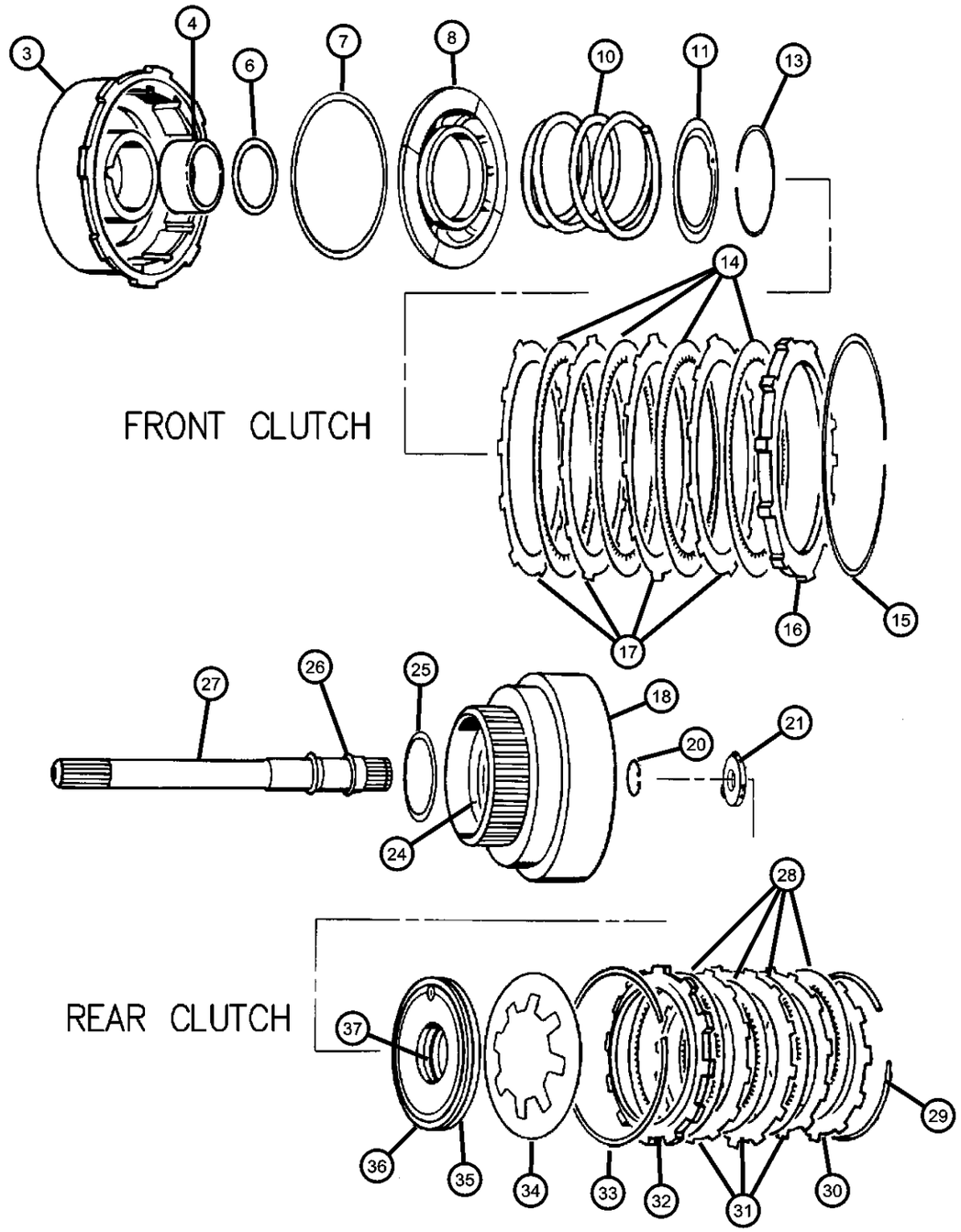

ITEM	PART NUMBER	QTY	LINE	SERIES	BODY	ENGINE	TRANS	TRIM	DESCRIPTION
		1	J				DGK		
-12									CHECK BALL, Dia-.187
	00147483	1	T				DGK		
		1	J				DGK		
13									SNAP RING
	03410571	1	T				DGK		
		1	J				DGK		
14									DISC, Direct Clutch
	04617362	4	T				DGK		
		4	J				DGK		
15									SNAP RING
	03410571	1	T				DGK		
		1	J				DGK		
16									PLATE, Transmission Clutch Reaction
	04617176AB	1	T				DGK		
		1	J				DGK		
17									PLATE, Clutch Separator
	01942403AC	4	T				DGK		With [V] Notch
		4	J				DGK		With [V] Notch
18									RETAINER, Transmission Rear Clutch
	02464463	1	J				DGK		
	04505199	1	T				DGK		
-19									CHECK BALL, Dia-.187
	00147483	1	T				DGK		
		1	J				DGK		
20									SNAP RING, .890625
	06022859	1	T				DGK		
		1	J				DGK		
21									THRUST WASHER, Output Shaft, Gray .052
	04505185	1	T				DGK		
		1	J				DGK		

GRAND CHEROKEE (WJ)

SERIES	LINE	BODY	ENGINE	TRANSMISSION
H = Laredo M = Sport P = Limited S = Overland	T = JEEP - 2WD J = JEEP - 4WD U = JEEP - 4WD (RHD)	74 = SPORT UTILITY 4-DR	ERH = Engine - 4.0L Power Tech I-6 EVA = Engine- 4.7L V8 MPI EVC = Engine - 4.7L HO V8 MPI ER0 = All 4.0L 6 Cyl. Gas EV0 = All 4.7L Gas	DGK = 4 Speed Auto, 42RE DGQ = 5 Speed Auto, 45RFE DG0 = All Automatic Transmissions

AR = use ase required - = Non illustrrated part

Gear Train [42RE] [DGK]
Figure 42RE-410

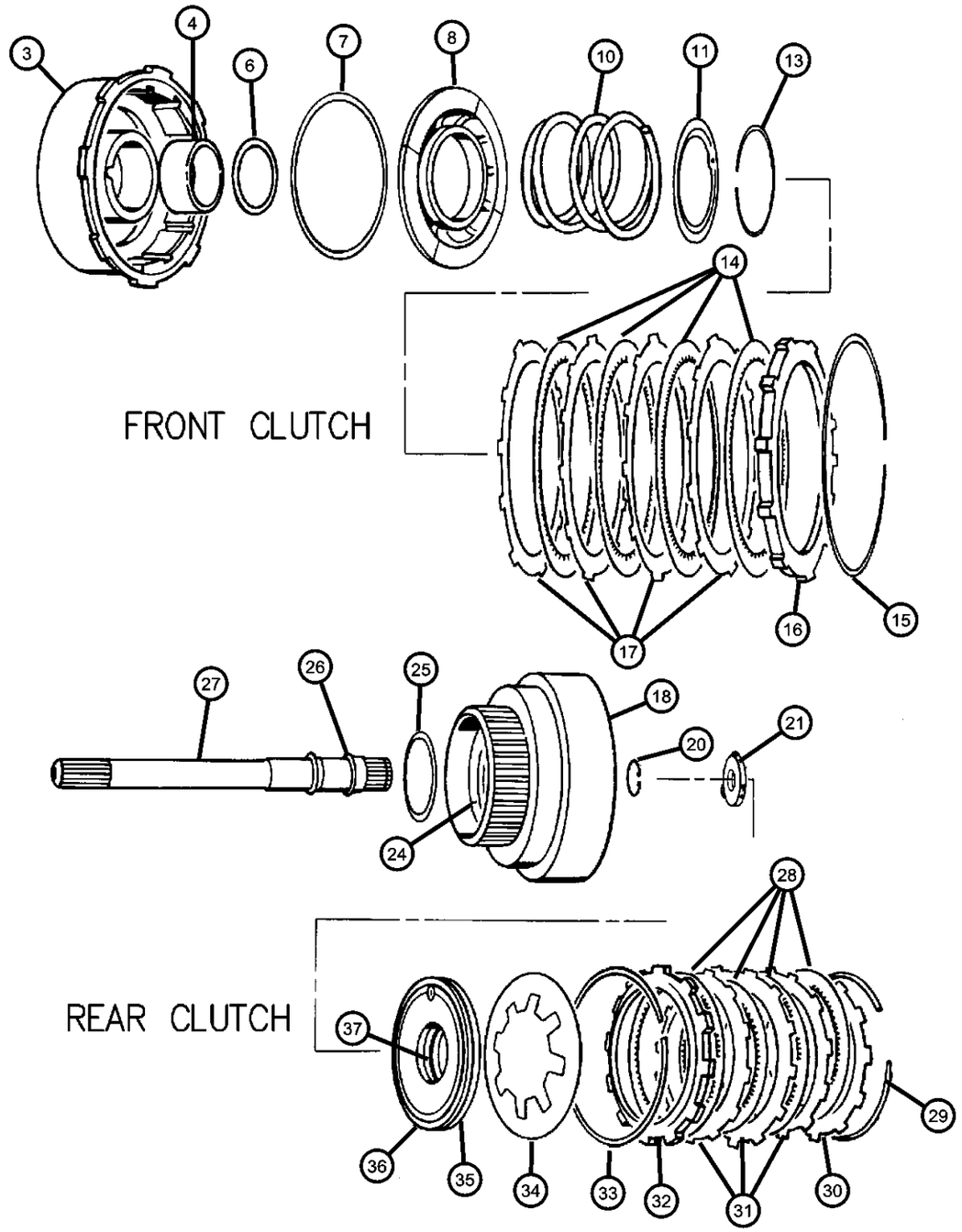

ITEM	PART NUMBER	QTY	LINE	SERIES	BODY	ENGINE	TRANS	TRIM	DESCRIPTION
-22									THRUST WASHER, Output Shaft, Red .068
	04505186	1	T				DGK		
		1	J				DGK		
-23									THRUST WASHER, Output Shaft, Green .083
	04505187	1	T				DGK		
		1	J				DGK		
24									SEAL, Rear Clutch Retainer
	04617063	1	T				DGK		
		1	J				DGK		
25									THRUST WASHER, Front Clutch
	04617786	1	T				DGK		
		1	J				DGK		
26									SEAL, Input Shaft
	01401221AB	1	T				DGK		
		1	J				DGK		
27									INPUT SHAFT, Transmission
	04505189	1	T				DGK		
		1	J				DGK		
28									DISC, Clutch
	04713880	4	T				DGK		
		4	J				DGK		
29									SNAP RING
	04130761	1	T				DGK		
		1	J				DGK		
30									PLATE, Transmission Clutch Reaction
	04617176AB	1	T				DGK		
		1	J				DGK		
31									PLATE, Clutch Separator
	01942403AB	3	T				DGK		
		3	J				DGK		
32									PLATE, Clutch Pressure

GRAND CHEROKEE (WJ)

SERIES	LINE	BODY	ENGINE	TRANSMISSION
H = Laredo M = Sport P = Limited S = Overland	T = JEEP - 2WD J = JEEP - 4WD U = JEEP - 4WD (RHD)	74 = SPORT UTILITY 4-DR	ERH = Engine - 4.0L Power Tech I-6 EVA = Engine- 4.7L V8 MPI EVC = Engine - 4.7L HO V8 MPI ER0 = All 4.0L 6 Cyl. Gas EV0 = All 4.7L Gas	DGK = 4 Speed Auto, 42RE DGQ = 5 Speed Auto, 45RFE DG0 = All Automatic Transmissions

AR = use ase required - = Non illustrrated part

Gear Train [42RE] [DGK]
Figure 42RE-410

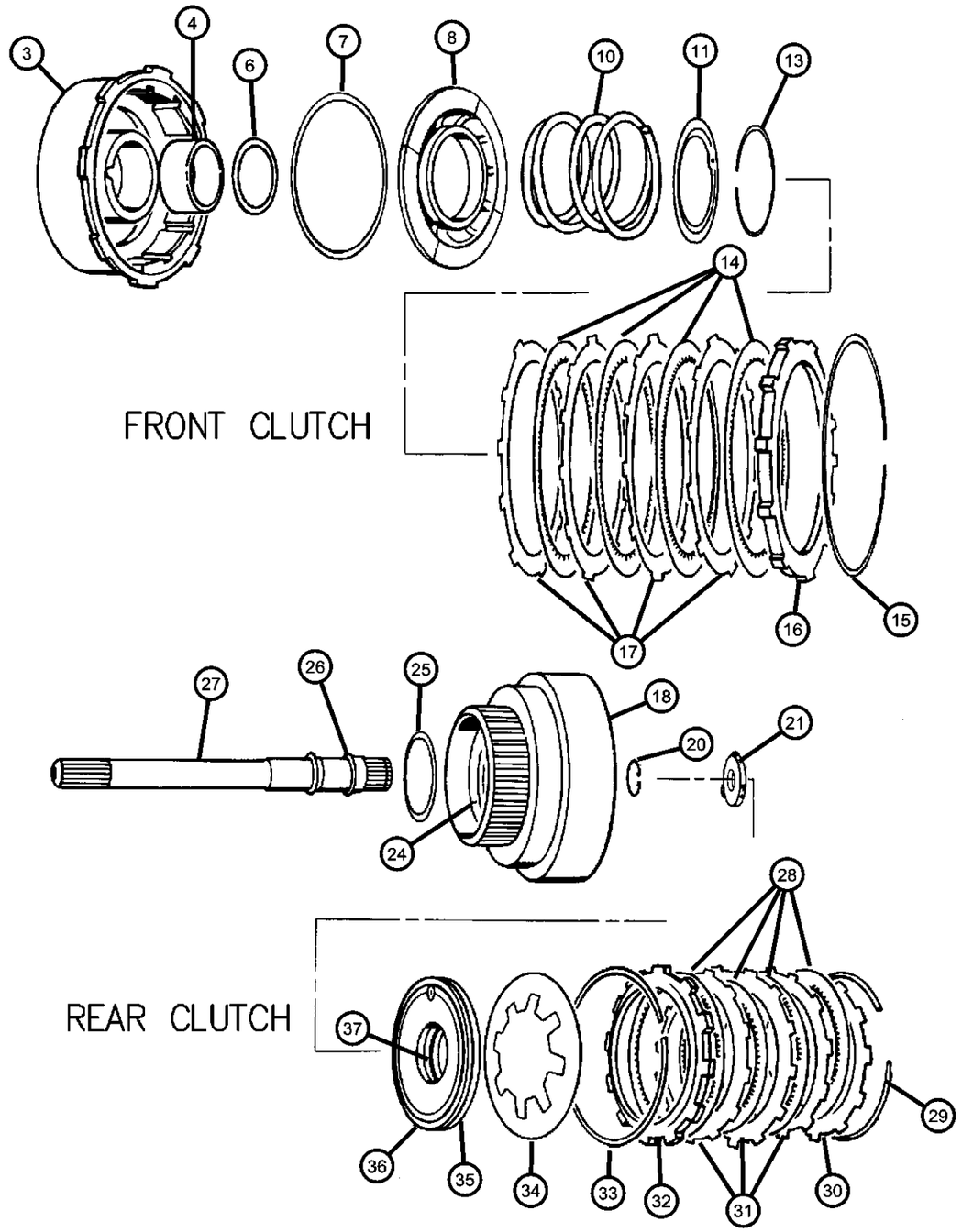

ITEM	PART NUMBER	QTY	LINE	SERIES	BODY	ENGINE	TRANS	TRIM	DESCRIPTION
	02466281	1	T				DGK		
		1	J				DGK		
33									SPRING, Rear Clutch
	02466283	1	T				DGK		
		1	J				DGK		
34									SPRING, Rear Clutch Piston
	04728487	1	T				DGK		
		1	J				DGK		
35									PISTON, Clutch
	03515716	1	T				DGK		
		1	J				DGK		
36									SEAL, Rear Clutch Piston
	02538695	1	T				DGK		Outer
		1	J				DGK		Outer
37									SEAL, Rear Clutch Piston
	02538510	1	T				DGK		Inner
		1	J				DGK		Inner

GRAND CHEROKEE (WJ)

SERIES	LINE	BODY	ENGINE	TRANSMISSION
H = Laredo	T = JEEP - 2WD	74 = SPORT UTILITY 4-DR	ERH = Engine - 4.0L Power Tech I-6	DGK = 4 Speed Auto, 42RE
M = Sport	J = JEEP - 4WD		EVA = Engine- 4.7L V8 MPI	DGQ = 5 Speed Auto, 45RFE
P = Limited	U = JEEP - 4WD (RHD)		EVC = Engine - 4.7L HO V8 MPI	DG0 = All Automatic Transmissions
S = Overland			ER0 = All 4.0L 6 Cyl. Gas	
			EV0 = All 4.7L Gas	

AR = use ase required - = Non illustrrated part

Gear Train and Intermediate Shaft [42RE] [DGK]
Figure 42RE-420

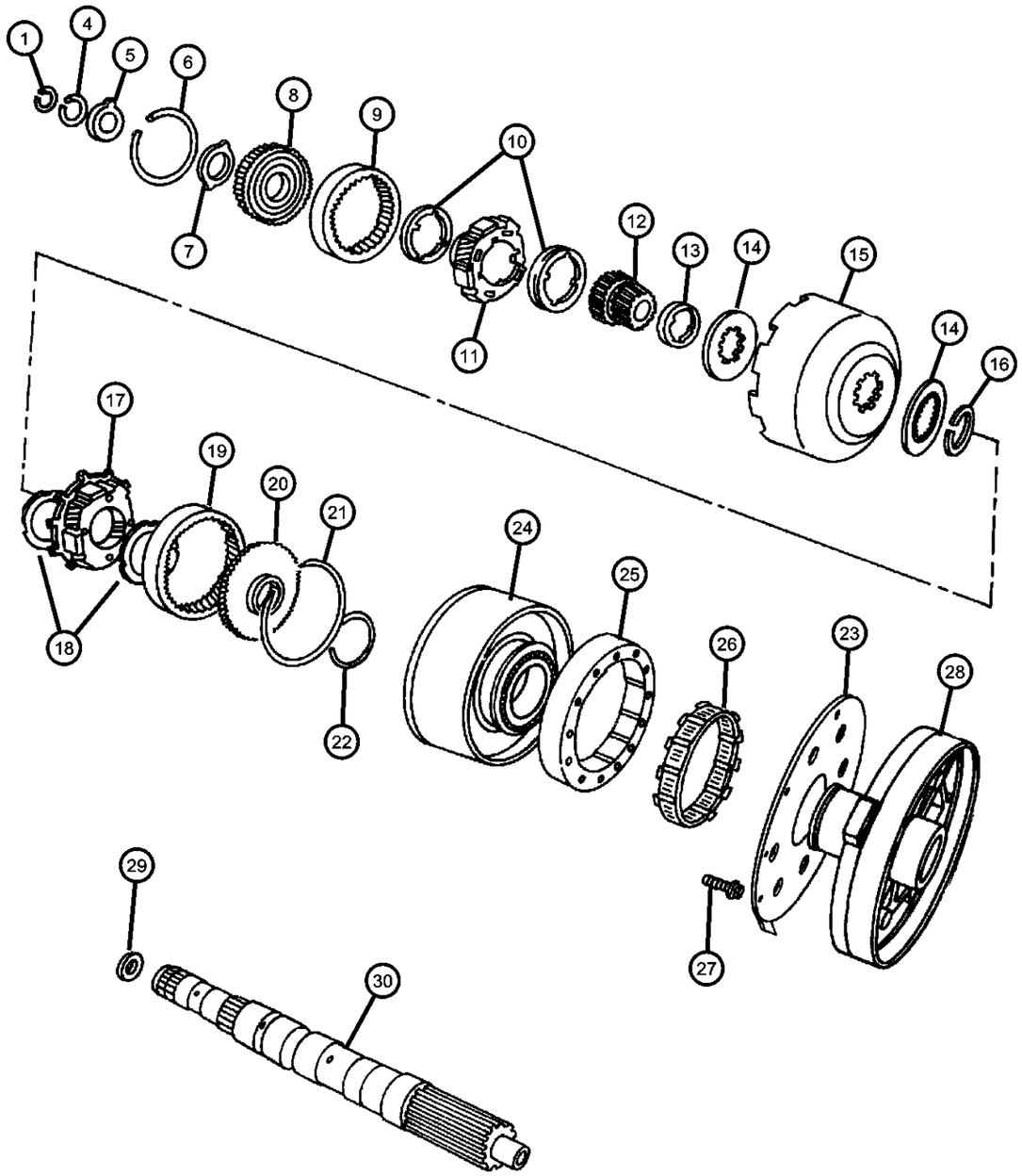

ITEM	PART NUMBER	QTY	LINE	SERIES	BODY	ENGINE	TRANS	TRIM	DESCRIPTION
1									SNAP RING, .946 ID
	06026289	1	T				DGK		
		1	J				DGK		
-2									SNAP RING
	06030938	1	T				DGK		
		1	J				DGK		
-3									SNAP RING, Output Shaft, 1.029 OD
	06030404	1	T				DGK		
		1	J				DGK		
4									SNAP RING, Annulus Gear, 1.375 ID
	06030576	1	T				DGK		
		1	J				DGK		
5									THRUST WASHER, Annulus Gear
	03681969	1	T				DGK		
		1	J				DGK		
6									SNAP RING
	06030938	1	T				DGK		
		1	J				DGK		
7									PLATE, Annulus Gear Thrust
	04617775	1	T				DGK		
		1	J				DGK		
8									SUPPORT, Annulus Gear
	04617774	1	T				DGK		
		1	J				DGK		
9									GEAR, Front Annulus
	04130512	1	T				DGK		
		1	J				DGK		
10									THRUST WASHER, Planetary Carrier
	04130518	2	T				DGK		
		2	J				DGK		
11									CARRIER, Planetary Pinion
	04130514	1	T				DGK		

GRAND CHEROKEE (WJ)

SERIES	LINE	BODY	ENGINE	TRANSMISSION
H = Laredo M = Sport P = Limited S = Overland	T = JEEP - 2WD J = JEEP - 4WD U = JEEP - 4WD (RHD)	74 = SPORT UTILITY 4-DR	ERH = Engine - 4.0L Power Tech I-6 EVA = Engine- 4.7L V8 MPI EVC = Engine - 4.7L HO V8 MPI ER0 = All 4.0L 6 Cyl. Gas EV0 = All 4.7L Gas	DGK = 4 Speed Auto, 42RE DGQ = 5 Speed Auto, 45RFE DG0 = All Automatic Transmissions

AR = use ase required - = Non illustrrated part

Gear Train and Intermediate Shaft [42RE] [DGK]
Figure 42RE-420

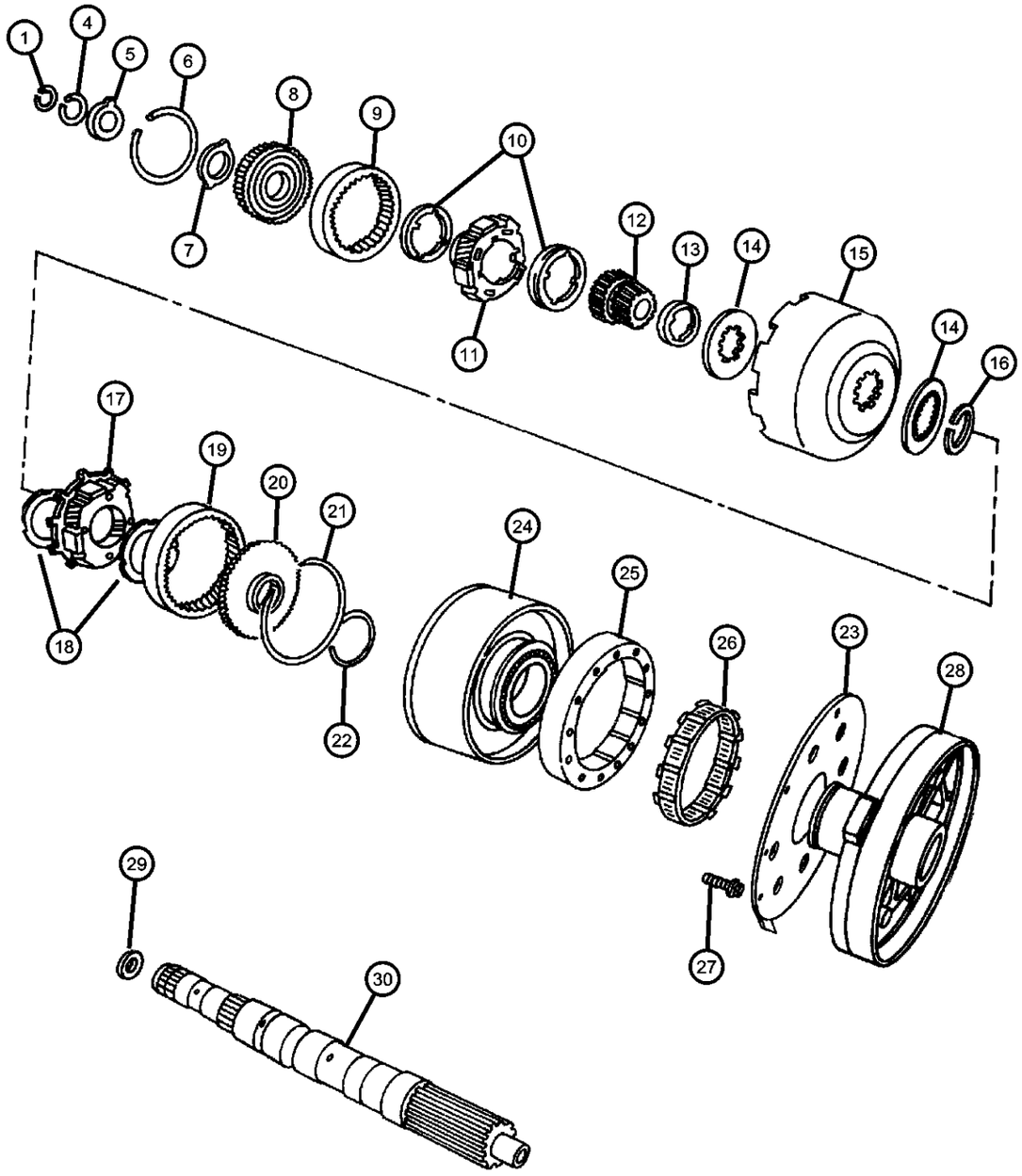

ITEM	PART NUMBER	QTY	LINE	SERIES	BODY	ENGINE	TRANS	TRIM	DESCRIPTION
		1	J				DGK		
12									GEAR, Sun
	04130685	1	T				DGK		
		1	J				DGK		
13									SPACER, Sun Gear
	04130736	1	T				DGK		
		1	J				DGK		
14									PLATE, Transmission Module
	04471566	2	T				DGK		
		2	J				DGK		
15									SHELL, Sun Gear
	04531288	1	T				DGK		
		1	J				DGK		
16									SNAP RING, Sun Gear Shell
	01942439	1	T				DGK		
		1	J				DGK		
17									CARRIER, Planetary Pinion
	04431438	1	T				DGK		
		1	J				DGK		
18									THRUST WASHER, Planetary Carrier
	03681935	1	T				DGK		
		1	J				DGK		
19									GEAR, Rear Annulus
	03743184	1	T				DGK		
		1	J				DGK		
20									SUPPORT, Annulus Gear
	03515501	1	T				DGK		
		1	J				DGK		
21									SNAP RING
	01942444	1	T				DGK		
		1	J				DGK		
22									SNAP RING, Reverse Drum

GRAND CHEROKEE (WJ)

SERIES	LINE	BODY	ENGINE	TRANSMISSION
H = Laredo M = Sport P = Limited S = Overland	T = JEEP - 2WD J = JEEP - 4WD U = JEEP - 4WD (RHD)	74 = SPORT UTILITY 4-DR	ERH = Engine - 4.0L Power Tech I-6 EVA = Engine- 4.7L V8 MPI EVC = Engine - 4.7L HO V8 MPI ER0 = All 4.0L 6 Cyl. Gas EV0 = All 4.7L Gas	DGK = 4 Speed Auto, 42RE DGQ = 5 Speed Auto, 45RFE DG0 = All Automatic Transmissions

AR = use ase required - = Non illustrrated part

Gear Train and Intermediate Shaft [42RE] [DGK]
Figure 42RE-420

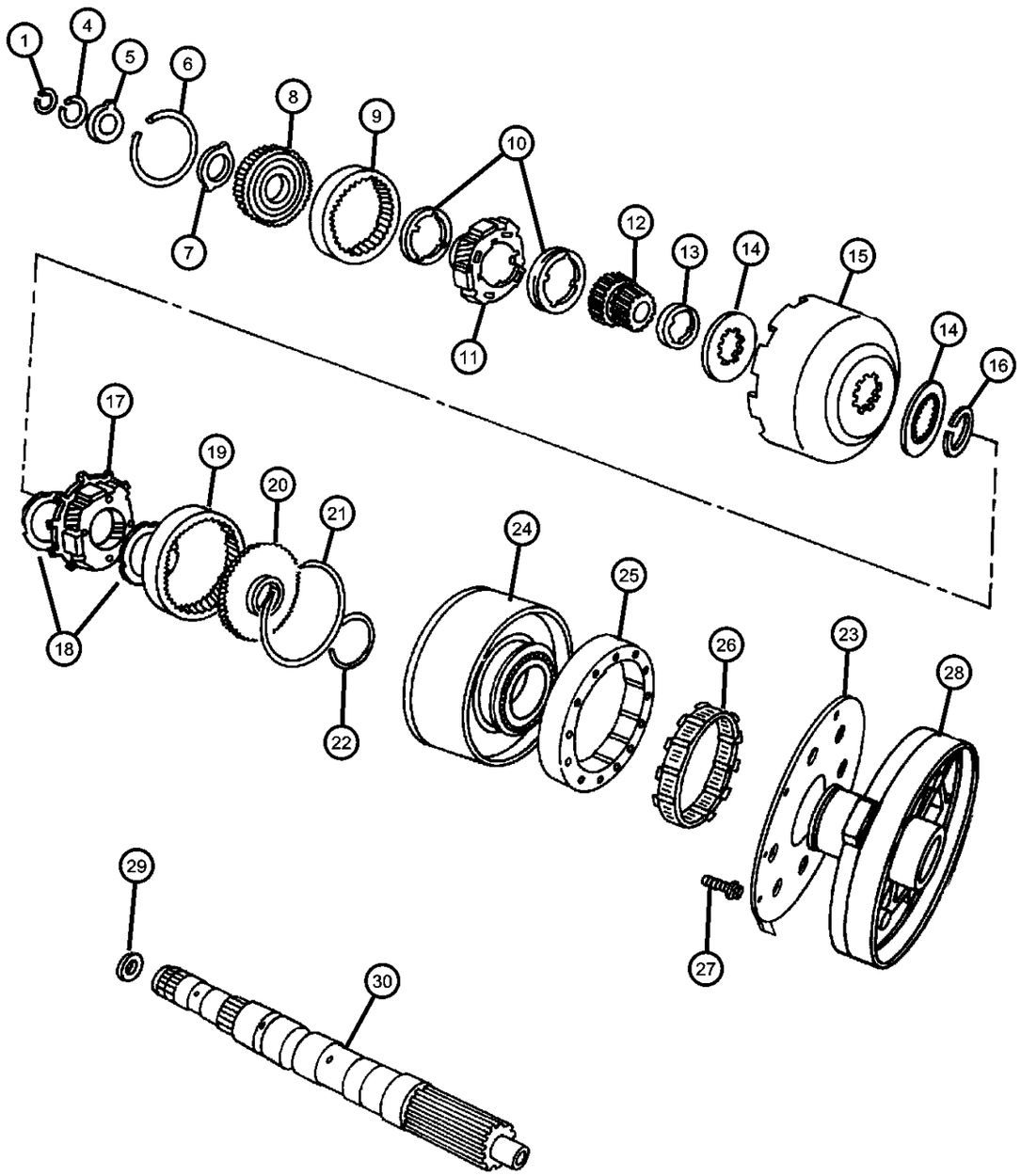

ITEM	PART NUMBER	QTY	LINE	SERIES	BODY	ENGINE	TRANS	TRIM	DESCRIPTION
	06033480	1	T				DGK		
		1	J				DGK		
23									GASKET, Overdrive Piston Retainer
	04471564	1	T				DGK		
		1	J				DGK		
24									DRUM PACKAGE, Transmission
	04637956	1	T				DGK		
		1	J				DGK		
25									CAM, Overrunning Clutch
	04431690	1	T				DGK		
		1	J				DGK		
26									CLUTCH, Overrunning
	04431432	1	T				DGK		
		1	J				DGK		
27									SCREW, Hex Flange Head, .25-28x.875
	06033616	5	T				DGK		
		5	J				DGK		
28									RETAINER, Transmission Overdrive Clutch Piston
	04617246	1	T				DGK		
		1	J				DGK		
29									PLATE, Transmission Module
	04471566	2	T				DGK		
		2	J				DGK		
30									INTERMEDIATE SHAFT, Transmission
	04617604	1	T				DGK		
		1	J				DGK		

GRAND CHEROKEE (WJ)

SERIES	LINE	BODY	ENGINE	TRANSMISSION
H = Laredo M = Sport P = Limited S = Overland	T = JEEP - 2WD J = JEEP - 4WD U = JEEP - 4WD (RHD)	74 = SPORT UTILITY 4-DR	ERH = Engine - 4.0L Power Tech I-6 EVA = Engine- 4.7L V8 MPI EVC = Engine - 4.7L HO V8 MPI ER0 = All 4.0L 6 Cyl. Gas EV0 = All 4.7L Gas	DGK = 4 Speed Auto, 42RE DGQ = 5 Speed Auto, 45RFE DG0 = All Automatic Transmissions

AR = use ase required - = Non illustrrated part

Output Shaft [42RE] [DGK]
Figure 42RE-430

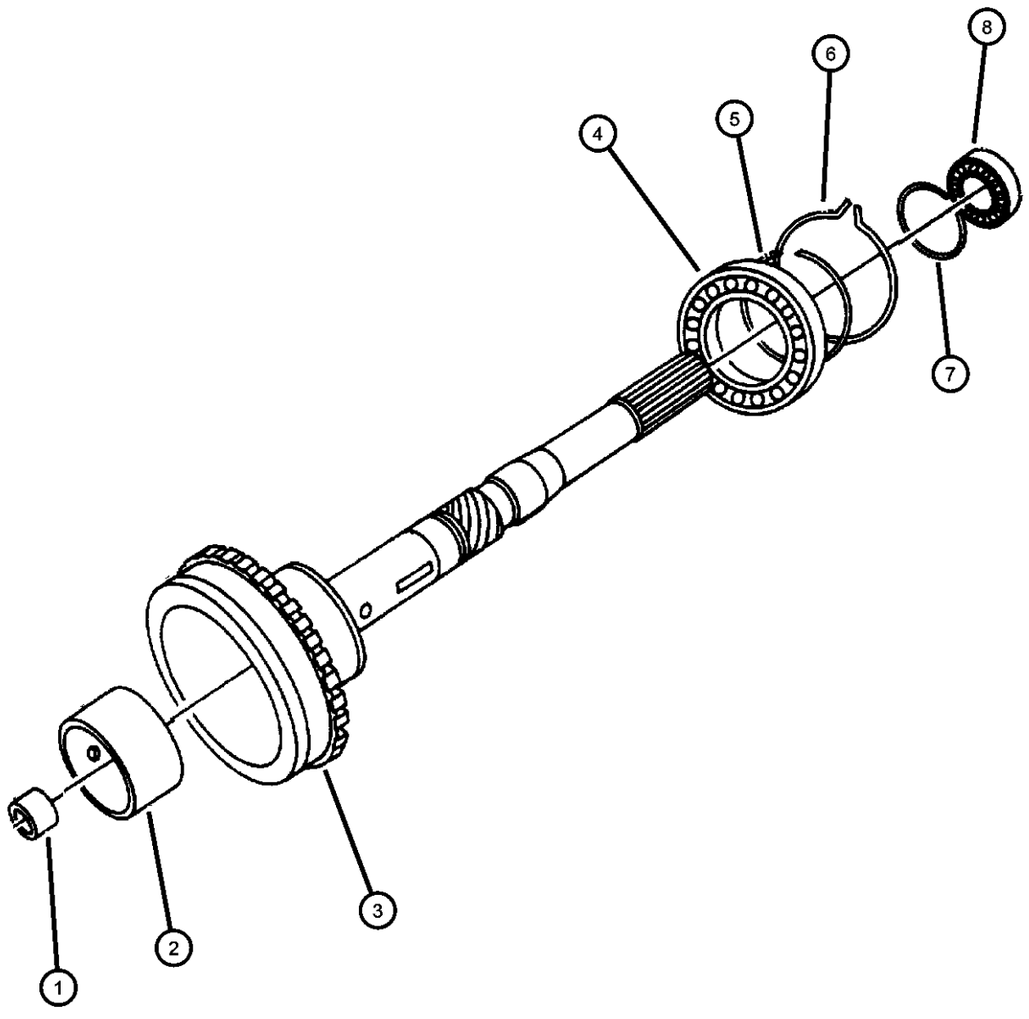

ITEM	PART NUMBER	QTY	LINE	SERIES	BODY	ENGINE	TRANS	TRIM	DESCRIPTION
1		1							BUSHING, (NOT SERVICED)
2		1							BUSHING, (NOT SERVICED)
3									SHAFT, Output
	04798536	1	J				DGK		
	05003232AA	1	T				DGK		
4									BEARING, Output Shaft
	04461008	1	T				DGK		
		1	J				DGK		
5									SNAP RING, .946 ID
	06026289	1	T				DGK		
		1	J				DGK		
6									SNAP RING, Output Shaft, 1.029 OD
	06030404	1	T				DGK		
		1	J				DGK		
7									SNAP RING
	06030938	1	T				DGK		
		1	J				DGK		
8									BEARING, Output Shaft
	02466224	1	T				DGK		
	04461008	1	J				DGK		

GRAND CHEROKEE (WJ)

SERIES	LINE	BODY	ENGINE	TRANSMISSION
H = Laredo M = Sport P = Limited S = Overland	T = JEEP - 2WD J = JEEP - 4WD U = JEEP - 4WD (RHD)	74 = SPORT UTILITY 4-DR	ERH = Engine - 4.0L Power Tech I-6 EVA = Engine- 4.7L V8 MPI EVC = Engine - 4.7L HO V8 MPI ER0 = All 4.0L 6 Cyl. Gas EV0 = All 4.7L Gas	DGK = 4 Speed Auto, 42RE DGQ = 5 Speed Auto, 45RFE DG0 = All Automatic Transmissions

Bands [42RE] [DGK]
Figure 42RE-510

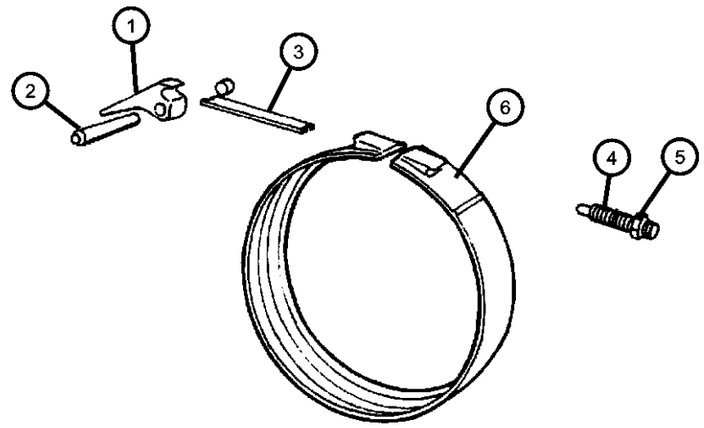

KICKDOWN BAND

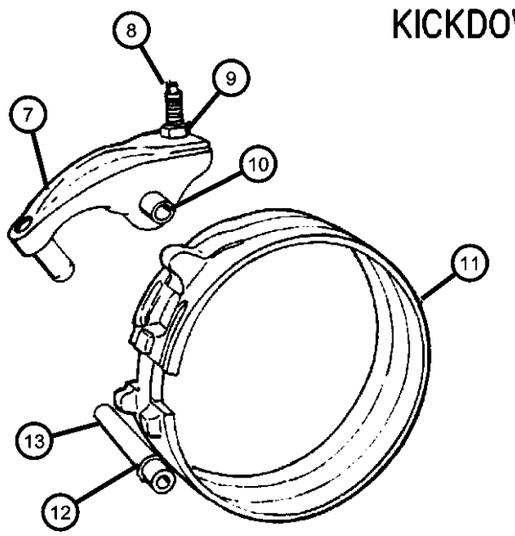

DOUBLE WRAP REVERSE BAND

ITEM	PART NUMBER	QTY	LINE	SERIES	BODY	ENGINE	TRANS	TRIM	DESCRIPTION
1									LEVER, Kickdown
	52118264	1	T				DGK		
		1	J				DGK		
2									SHAFT, Band Lever
	04531181	1	T				DGK		
		1	J				DGK		
3									STRUT, Kickdown Band
	03515084	1	T				DGK		
		1	J				DGK		
4									SCREW
	06036141AA	1	T				DGK		
		1	J				DGK		
5									NUT, Hex Jam, .50-20
	00124934	1	T				DGK		
		1	J				DGK		
6									BAND, Kickdown
	04617849	1	T				DGK		
		1	J				DGK		
7									LEVER, Reverse Band
	04202764AB	1	T				DGK		
		1	J				DGK		
8									SCREW, Trans Reverse Band Adjusting, .375-24-1.88
	02538472	1	T				DGK		
		1	J				DGK		
9	00114942	1	T				DGK		NUT, Hex, .375-24
10									SHAFT, Reverse Band
	03410102	1	T				DGK		
		1	J				DGK		
11									BAND, Reverse
	04431406	1	T				DGK		
		1	J				DGK		
12									O RING, Steering Gear
	06030657	1	T				DGK		

GRAND CHEROKEE (WJ)

SERIES	LINE	BODY	ENGINE	TRANSMISSION
H = Laredo M = Sport P = Limited S = Overland	T = JEEP - 2WD J = JEEP - 4WD U = JEEP - 4WD (RHD)	74 = SPORT UTILITY 4-DR	ERH = Engine - 4.0L Power Tech I-6 EVA = Engine- 4.7L V8 MPI EVC = Engine - 4.7L HO V8 MPI ER0 = All 4.0L 6 Cyl. Gas EV0 = All 4.7L Gas	DGK = 4 Speed Auto, 42RE DGQ = 5 Speed Auto, 45RFE DG0 = All Automatic Transmissions

Bands [42RE] [DGK]
Figure 42RE-510

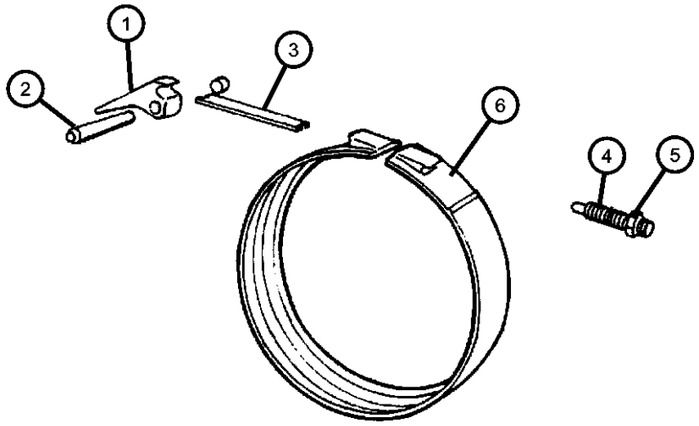

KICKDOWN BAND

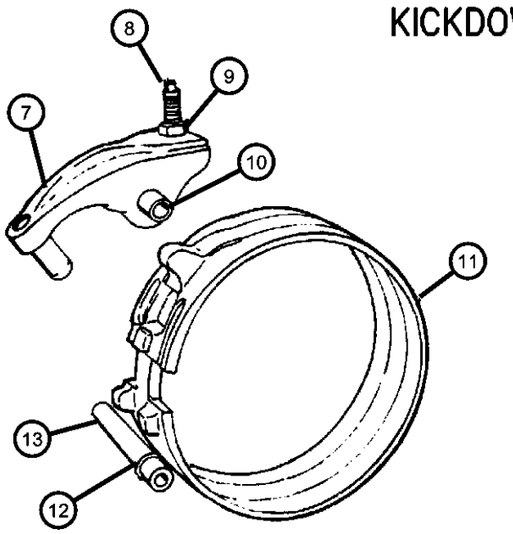

DOUBLE WRAP REVERSE BAND

ITEM	PART NUMBER	QTY	LINE	SERIES	BODY	ENGINE	TRANS	TRIM	DESCRIPTION
		1	J				DGK		
13									SHAFT, Reverse Band
	03410102	1	T				DGK		
		1	J				DGK		

GRAND CHEROKEE (WJ)

SERIES	LINE	BODY	ENGINE	TRANSMISSION
H = Laredo M = Sport P = Limited S = Overland	T = JEEP - 2WD J = JEEP - 4WD U = JEEP - 4WD (RHD)	74 = SPORT UTILITY 4-DR	ERH = Engine - 4.0L Power Tech I-6 EVA = Engine- 4.7L V8 MPI EVC = Engine - 4.7L HO V8 MPI ER0 = All 4.0L 6 Cyl. Gas EV0 = All 4.7L Gas	DGK = 4 Speed Auto, 42RE DGQ = 5 Speed Auto, 45RFE DG0 = All Automatic Transmissions

Valve Body [42RE] [DGK]
Figure 42RE-710

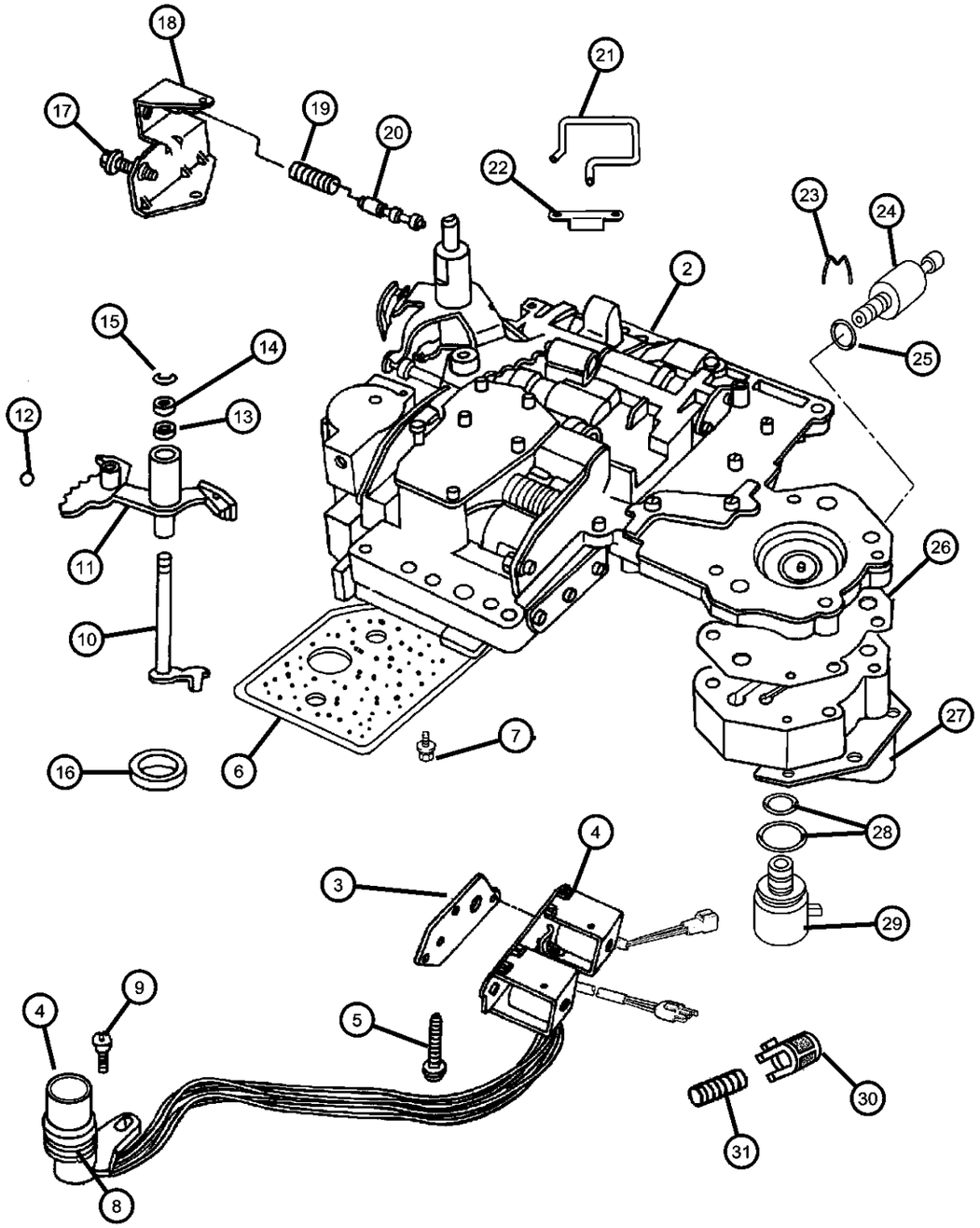

ITEM	PART NUMBER	QTY	LINE	SERIES	BODY	ENGINE	TRANS	TRIM	DESCRIPTION
-1									SEAL AND GASKET PACKAGE, Valve Body and Servo
	05072413AA	1	T				DGK		
		1	J				DGK		
2									BODY, Transfer Plate
	52119633AB	1	T				DGK		
		1	J				DGK		
3									GASKET, Transmission Solenoid
	04617216	1	T				DGK		
		1	J				DGK		
4									SOLENOID, Transmission Overdrive
	52118500AB	1	T				DGK		
		1	J				DGK		
5									BOLT, Valve Body, .25-20x1.75
	00181071	3	T				DGK		
		3	J				DGK		
6									FILTER, Valve Body
	52118789	1	T				DGK		
		1	J				DGK		
7									SCREW AND WASHER, Oil Filter Mounting, Fillester Head .190-24x2.500
	06033826	3	T				DGK		
		3	J				DGK		
8									O RING, Solenoid Wiring, Transmission
	06034748	1	T				DGK		
		1	J				DGK		
9									SCREW, Tapping, .19-24x.75
	06033985	1	T				DGK		
		1	J				DGK		
10									LEVER, Throttle Valve
	03681227	1	T				DGK		
		1	J				DGK		
11									LEVER, Manual Valve

GRAND CHEROKEE (WJ)

SERIES	LINE	BODY	ENGINE	TRANSMISSION
H = Laredo M = Sport P = Limited S = Overland	T = JEEP - 2WD J = JEEP - 4WD U = JEEP - 4WD (RHD)	74 = SPORT UTILITY 4-DR	ERH = Engine - 4.0L Power Tech I-6 EVA = Engine- 4.7L V8 MPI EVC = Engine - 4.7L HO V8 MPI ER0 = All 4.0L 6 Cyl. Gas EV0 = All 4.7L Gas	DGK = 4 Speed Auto, 42RE DGQ = 5 Speed Auto, 45RFE DG0 = All Automatic Transmissions

AR = use ase required - = Non illustrrated part

Valve Body [42RE] [DGK]
Figure 42RE-710

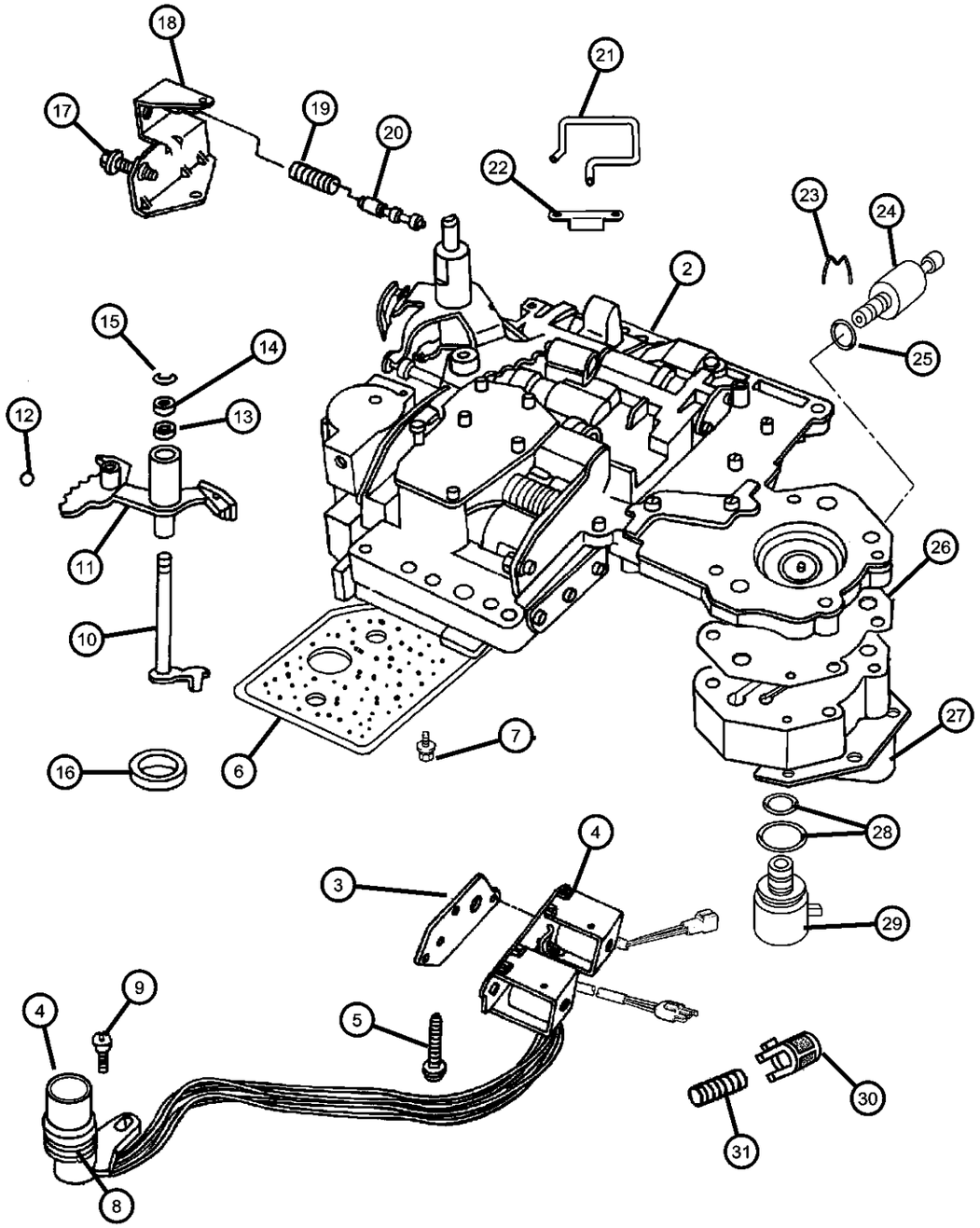

ITEM	PART NUMBER	QTY	LINE	SERIES	BODY	ENGINE	TRANS	TRIM	DESCRIPTION
	04617437	1	T				DGK		
		1	J				DGK		
12									BALL, Manual Lever Detent, .343 Diameter
	00147488	1	T				DGK		
		1	J				DGK		
13									SEAL, Valve Lever Shift
	02466548	1	T				DGK		
		1	J				DGK		
14									WASHER, Manual Valve Lever
	02538062	1	T				DGK		
		1	J				DGK		
15									SNAP RING
	06035208	2	T				DGK		
		2	J				DGK		
16									SEAL, Manual Shift Valve, 1.25 OD
	04505098	1	T				DGK		
		1	J				DGK		
17									SCREW, Cap Head Lock, .312-24x1.25
	06030609	1	T				DGK		
		1	J				DGK		
18									BRACKET, Valve Body Switch
	04617010	1	T				DGK		
		1	J				DGK		
19									SPRING, Switch Valve
	04130492	1	T				DGK		
		1	J				DGK		
20									VALVE, Trans Lockup Switch
	04505036	1	T				DGK		
		1	J				DGK		
21									TUBE, Boost Valve
	04617008	1	T				DGK		
		1	J				DGK		

GRAND CHEROKEE (WJ)

SERIES	LINE	BODY	ENGINE	TRANSMISSION
H = Laredo M = Sport P = Limited S = Overland	T = JEEP - 2WD J = JEEP - 4WD U = JEEP - 4WD (RHD)	74 = SPORT UTILITY 4-DR	ERH = Engine - 4.0L Power Tech I-6 EVA = Engine- 4.7L V8 MPI EVC = Engine - 4.7L HO V8 MPI ER0 = All 4.0L 6 Cyl. Gas EV0 = All 4.7L Gas	DGK = 4 Speed Auto, 42RE DGQ = 5 Speed Auto, 45RFE DG0 = All Automatic Transmissions

AR = use ase required - = Non illustrrated part

Valve Body [42RE] [DGK]
Figure 42RE-710

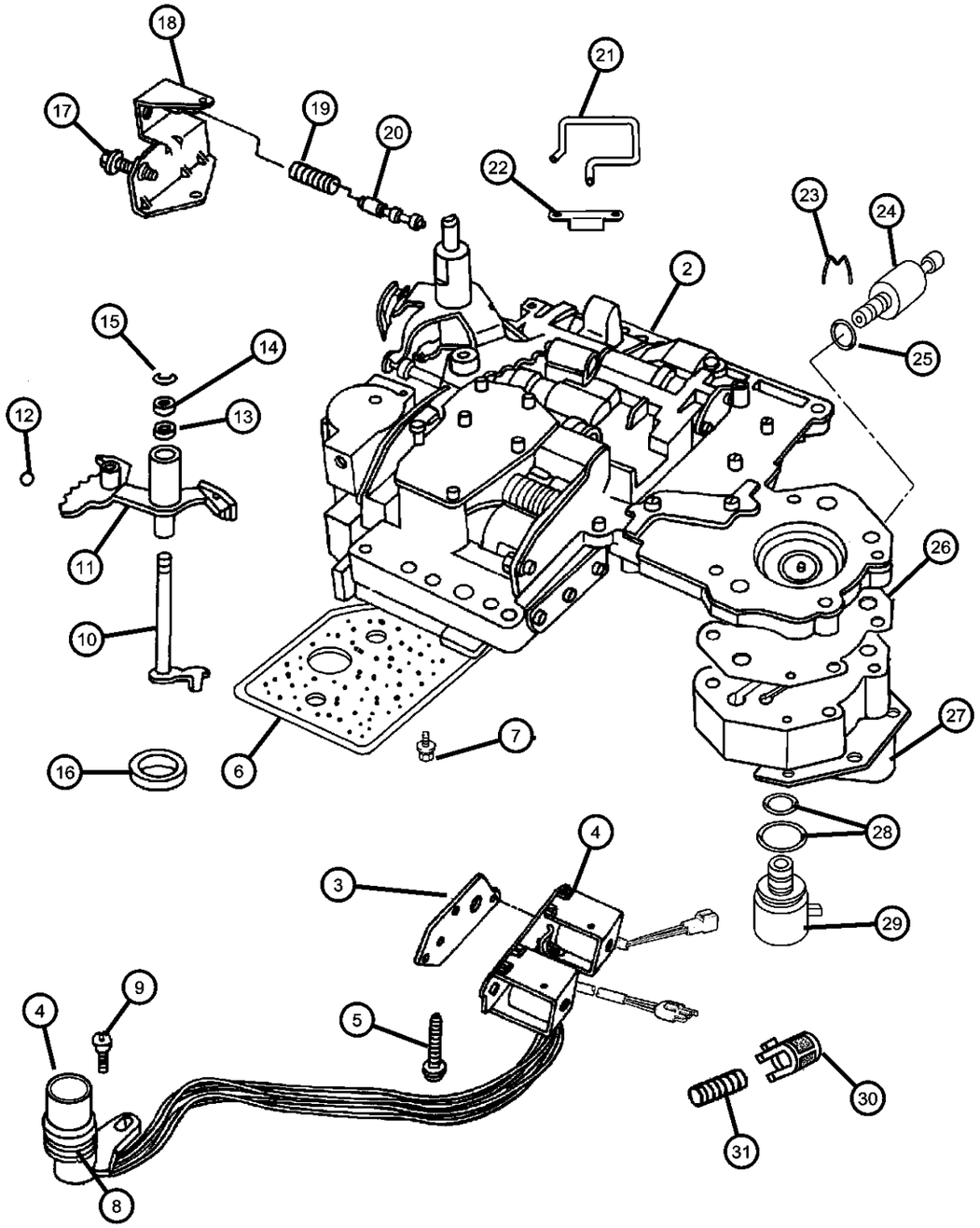

ITEM	PART NUMBER	QTY	LINE	SERIES	BODY	ENGINE	TRANS	TRIM	DESCRIPTION
22									RETAINER, Boost Valve Oil Supply Tube
	52117958	1	T				DGK		
		1	J				DGK		
23									CLIP, Transmission Governor Transducer
	04617219	1	T				DGK		
		1	J				DGK		
24									TRANSDUCER, Pressure Sensor
	56028196AA	1	T				DGK		
		1	J				DGK		
25		1							O RING, Pressure Switch, (NOT SERVICED)
26									GASKET, Transmission Solenoid
	04617216	1	T				DGK		
		1	J				DGK		
27									RETAINER, Transmission Governor Solenoid
	52117937AB	1	T				DGK		
		1	J				DGK		
28									O RING PACKAGE, Valve Body, Transmission
	04723549	1	T				DGK		
		1	J				DGK		
29									SOLENOID, Transmission Governor
	04617210	1	T				DGK		
		1	J				DGK		
30									SCREEN, Transmission Regulator Valve
	03878313	1	T				DGK		
		1	J				DGK		
31									SPRING, Limit Valve
	04348907	1	T				DGK		
		1	J				DGK		

GRAND CHEROKEE (WJ)

SERIES	LINE	BODY	ENGINE	TRANSMISSION
H = Laredo M = Sport P = Limited S = Overland	T = JEEP - 2WD J = JEEP - 4WD U = JEEP - 4WD (RHD)	74 = SPORT UTILITY 4-DR	ERH = Engine - 4.0L Power Tech I-6 EVA = Engine- 4.7L V8 MPI EVC = Engine - 4.7L HO V8 MPI ER0 = All 4.0L 6 Cyl. Gas EV0 = All 4.7L Gas	DGK = 4 Speed Auto, 42RE DGQ = 5 Speed Auto, 45RFE DG0 = All Automatic Transmissions

Servos [42RE] [DGK]
Figure 42RE-720

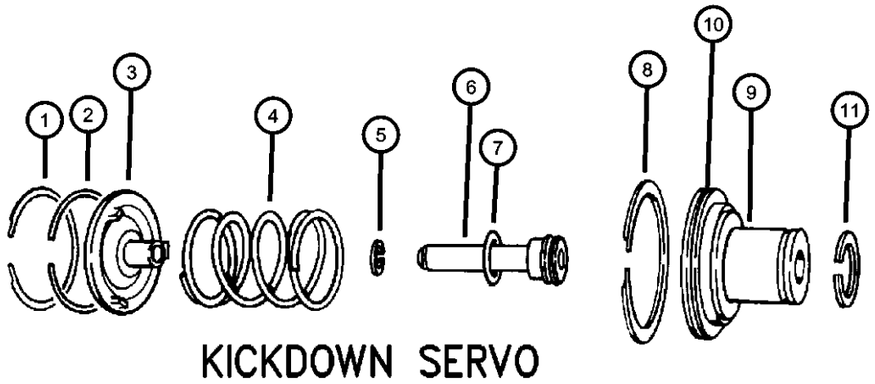

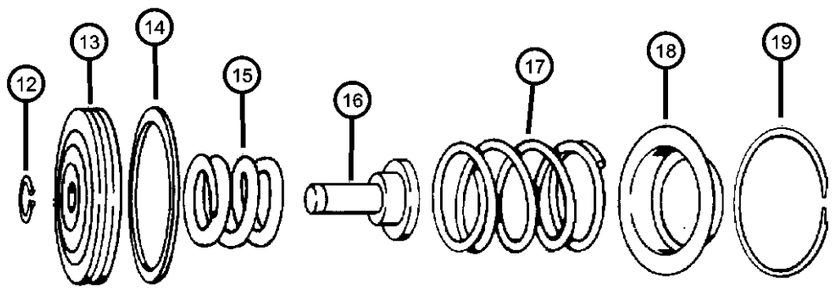

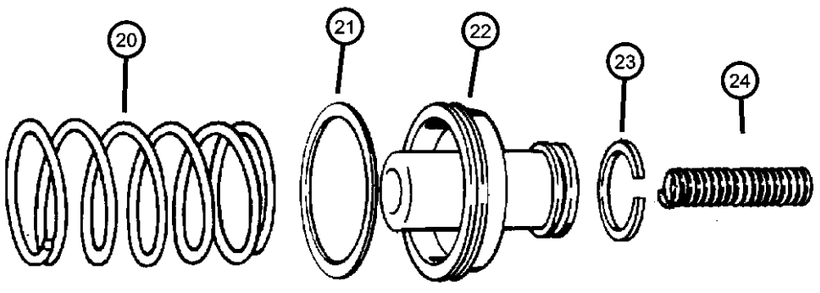

ITEM	PART NUMBER	QTY	LINE	SERIES	BODY	ENGINE	TRANS	TRIM	DESCRIPTION
1									SNAP RING, Kickdown, 2.377
	06028863	1	T				DGK		
		1	J				DGK		
2									SEAL, Servo Guide
	04295966	1	T				DGK		
		1	J				DGK		
3									GUIDE, Kickdown Servo
	03410332	1	T				DGK		
		1	J				DGK		
4									SPRING, Kickdown Servo Piston
	04058885	1	T				DGK		
		1	J				DGK		
5									SNAP RING, Brake Master Cylinder
	06031392	1	T				DGK		
		1	J				DGK		
6									ROD, Kickdown Servo Piston
	04058780	1	T				DGK		
		1	J				DGK		
7									O RING, Kick Down Servo
	06028864	1	T				DGK		
		1	J				DGK		
8									SEAL, Servo Guide
	04295966	1	T				DGK		
		1	J				DGK		
9									PISTON, Kickdown Servo
	04058777	1	T				DGK		
		1	J				DGK		
10									O RING, Kick Down Servo
	06028864	1	T				DGK		
		1	J				DGK		
11	03743033	1	T				DGK		SEAL, Kickdown Servo
12									SNAP RING, .435 ID
	06027153	1	T				DGK		

GRAND CHEROKEE (WJ)

SERIES	LINE	BODY	ENGINE	TRANSMISSION
H = Laredo M = Sport P = Limited S = Overland	T = JEEP - 2WD J = JEEP - 4WD U = JEEP - 4WD (RHD)	74 = SPORT UTILITY 4-DR	ERH = Engine - 4.0L Power Tech I-6 EVA = Engine- 4.7L V8 MPI EVC = Engine - 4.7L HO V8 MPI ER0 = All 4.0L 6 Cyl. Gas EV0 = All 4.7L Gas	DGK = 4 Speed Auto, 42RE DGQ = 5 Speed Auto, 45RFE DG0 = All Automatic Transmissions

AR = use ase required - = Non illustrrated part

Servos [42RE] [DGK]
Figure 42RE-720

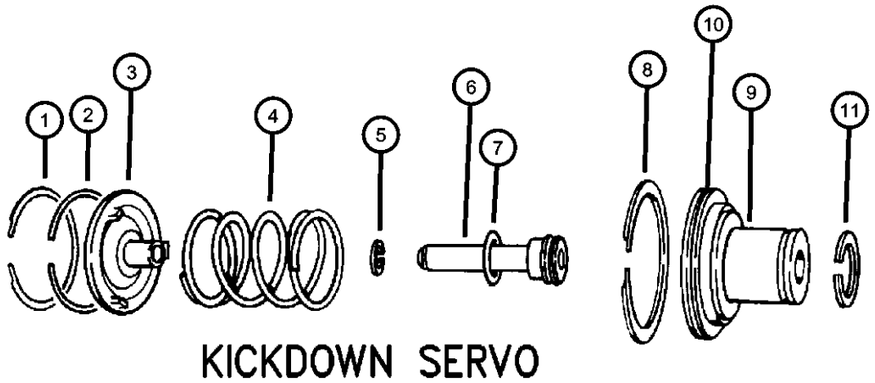

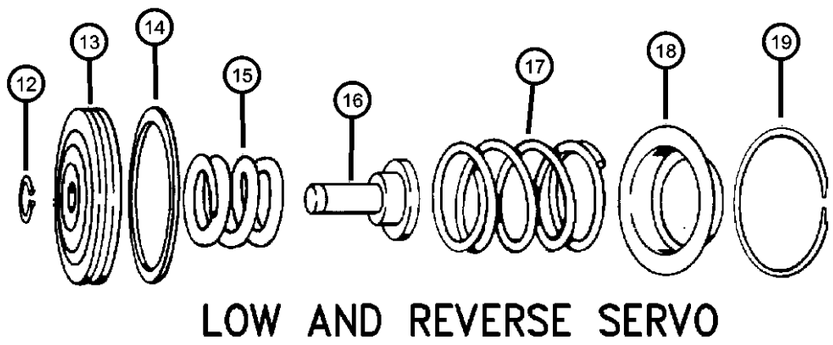

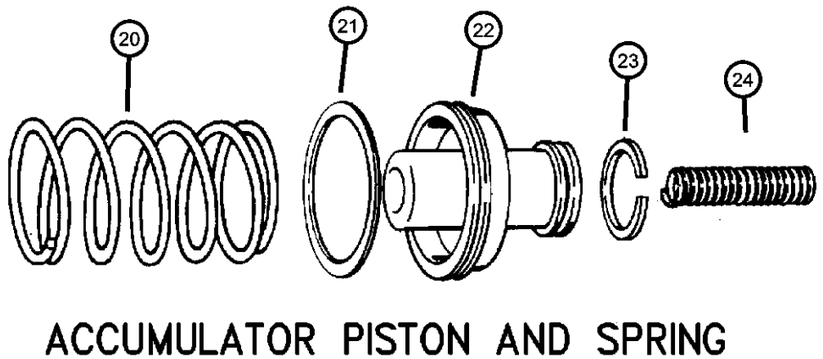

ITEM	PART NUMBER	QTY	LINE	SERIES	BODY	ENGINE	TRANS	TRIM	DESCRIPTION
		1	J				DGK		
13									PISTON, Reverse Servo
	52118744	1	T				DGK		
		1	J				DGK		
14	04202864	1	T				DGK		SEAL, Reverse Servo Piston
15									SPRING, Reverse Servo Piston
	04130824	1	T				DGK		
		1	J				DGK		
16									PLUG, Reverse Servo Piston
	52118740AB	1	T				DGK		
		1	J				DGK		
17									SPRING, Reverse Servo Piston
	02801274	1	T				DGK		
		1	J				DGK		
18									RETAINER, Transmission Rear Clutch
	02464463	1	T				DGK		
		1	J				DGK		
19									SNAP RING
	02464464	1	T				DGK		
		1	J				DGK		
20									SPRING, Transmission Accumulator
	04531259	1	T				DGK		
		1	J				DGK		
21									SEAL, Piston Accumulator
	03743013	1	J				DGK		
		1	T				DGK		
22									PISTON, Accumulator
	03743650	1	T				DGK		
		1	J				DGK		
23									SEAL, Piston Accumulator
	03743010	1	T				DGK		
		1	J				DGK		

GRAND CHEROKEE (WJ)

SERIES	LINE	BODY	ENGINE	TRANSMISSION
H = Laredo M = Sport P = Limited S = Overland	T = JEEP - 2WD J = JEEP - 4WD U = JEEP - 4WD (RHD)	74 = SPORT UTILITY 4-DR	ERH = Engine - 4.0L Power Tech I-6 EVA = Engine- 4.7L V8 MPI EVC = Engine - 4.7L HO V8 MPI ER0 = All 4.0L 6 Cyl. Gas EV0 = All 4.7L Gas	DGK = 4 Speed Auto, 42RE DGQ = 5 Speed Auto, 45RFE DG0 = All Automatic Transmissions

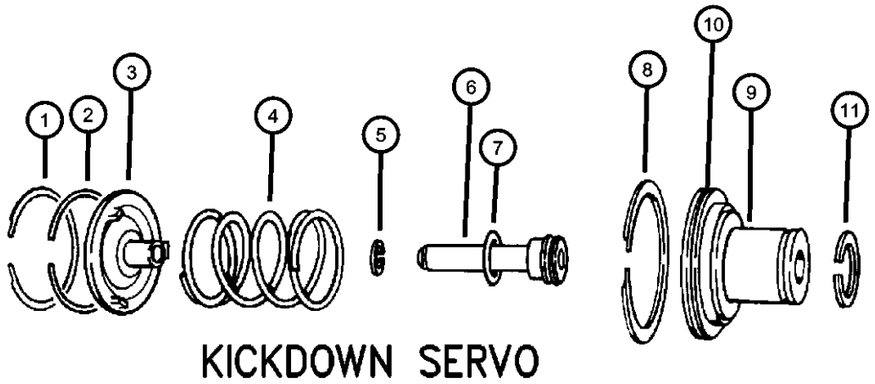

KICKDOWN SERVO

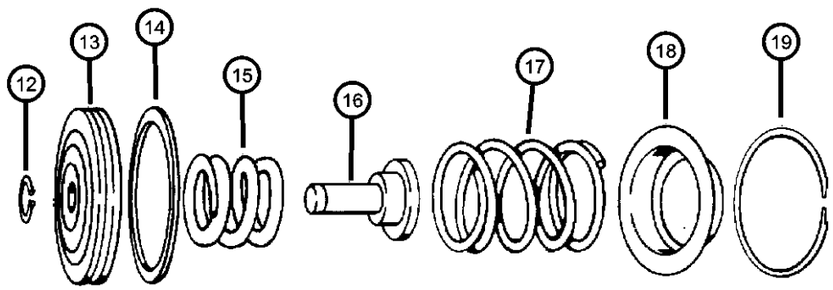

LOW AND REVERSE SERVO

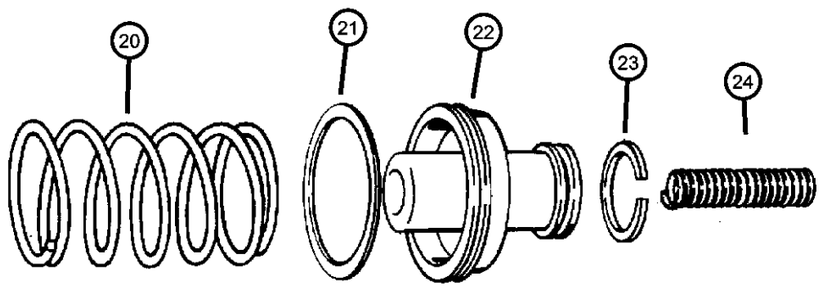

ACCUMULATOR PISTON AND SPRING

ITEM	PART NUMBER	QTY	LINE	SERIES	BODY	ENGINE	TRANS	TRIM	DESCRIPTION
24									SPRING, Accumulator Piston
	04617529	1	T				DGK		
		1	J				DGK		

GRAND CHEROKEE (WJ)

SERIES	LINE	BODY	ENGINE	TRANSMISSION
H = Laredo M = Sport P = Limited S = Overland	T = JEEP - 2WD J = JEEP - 4WD U = JEEP - 4WD (RHD)	74 = SPORT UTILITY 4-DR	ERH = Engine - 4.0L Power Tech I-6 EVA = Engine- 4.7L V8 MPI EVC = Engine - 4.7L HO V8 MPI ER0 = All 4.0L 6 Cyl. Gas EV0 = All 4.7L Gas	DGK = 4 Speed Auto, 42RE DGQ = 5 Speed Auto, 45RFE DG0 = All Automatic Transmissions

Parking Sprag [42RE] [DGK]
Figure 42RE-730

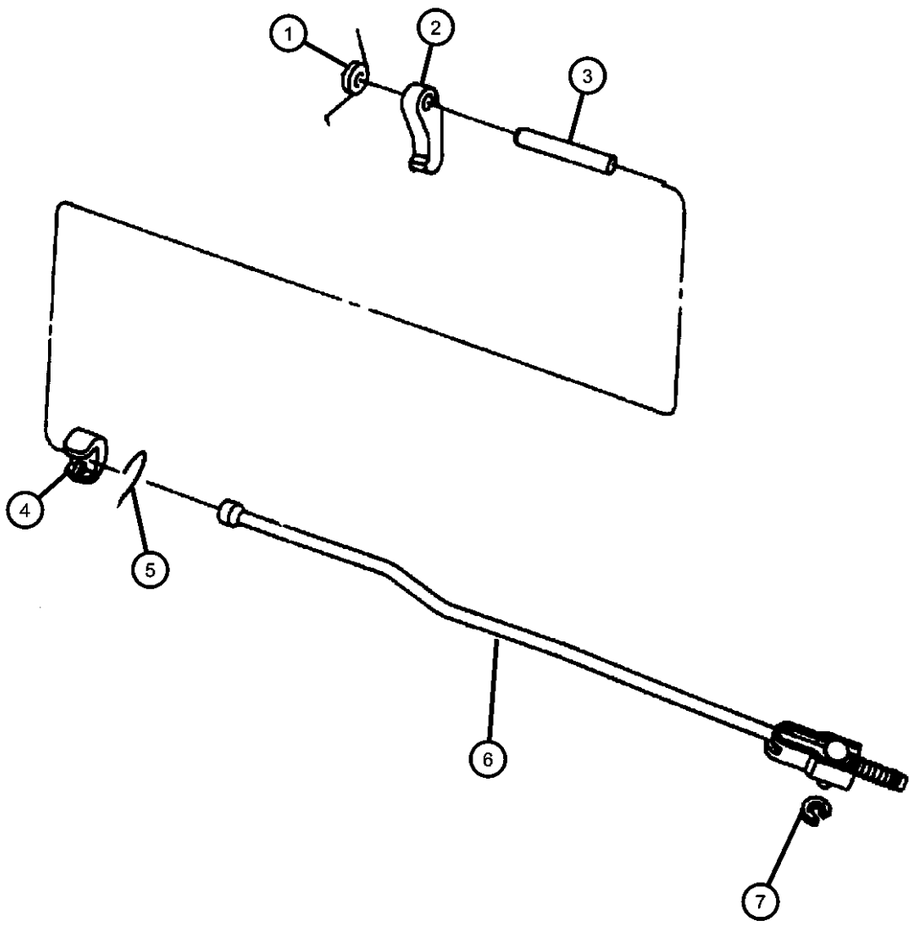

ITEM	PART NUMBER	QTY	LINE	SERIES	BODY	ENGINE	TRANS	TRIM	DESCRIPTION
1									SPRING, Parking Sprag
	02466909	1	T				DGK		
		1	J				DGK		
2									SPRAG, Transmission Parking
	04471415	1	T				DGK		
		1	J				DGK		
3									SHAFT, Parking Sprag
	02466892	1	T				DGK		
		1	J				DGK		
4									PLUG, Parking Sprag
	02538042	1	T				DGK		
		1	J				DGK		
5									SNAP RING, Transmission
	02538034	1	T				DGK		
		1	J				DGK		
6									ROD, Parking Sprag
	04431748	1	T				DGK		
		1	J				DGK		
7									SNAP RING, Rod
	06035256	1	T				DGK		
		1	J				DGK		

GRAND CHEROKEE (WJ)

SERIES	LINE	BODY	ENGINE	TRANSMISSION
H = Laredo M = Sport P = Limited S = Overland	T = JEEP - 2WD J = JEEP - 4WD U = JEEP - 4WD (RHD)	74 = SPORT UTILITY 4-DR	ERH = Engine - 4.0L Power Tech I-6 EVA = Engine- 4.7L V8 MPI EVC = Engine - 4.7L HO V8 MPI ER0 = All 4.0L 6 Cyl. Gas EV0 = All 4.7L Gas	DGK = 4 Speed Auto, 42RE DGQ = 5 Speed Auto, 45RFE DG0 = All Automatic Transmissions

AR = use ase required - = Non illustrrated part

Overdrive Gear Train [42RE] [DGK]
Figure 42RE-1010

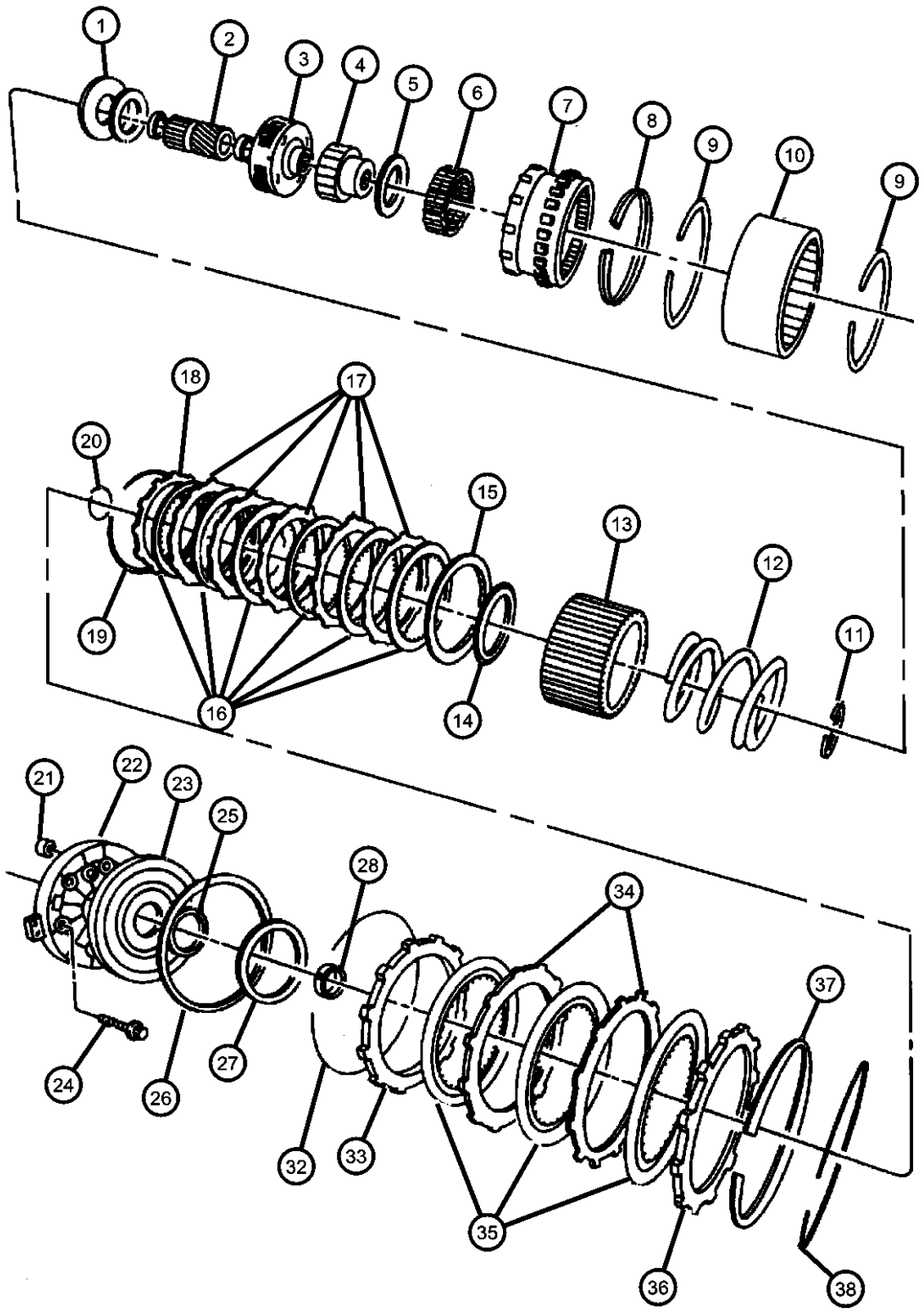

ITEM	PART NUMBER	QTY	LINE	SERIES	BODY	ENGINE	TRANS	TRIM	DESCRIPTION
1	04740774	1	T				DGK		PLATE PACKAGE, Transmission Module
2									GEAR, Overdrive Sun
	05015107AA	1	T				DGK		
		1	J				DGK		
3									CARRIER, O/Drive Planet Pinion
	04798520	1	T				DGK		
		1	J				DGK		
4									RACE, Overrunning Clutch
	04461124	1	T				DGK		
		1	J				DGK		
5	04461014	1	T				DGK		THRUST BEARING, Ovedrive Third Position
6									CLUTCH, Overdrive Overrunning
	04461015	1	T				DGK		
		1	J				DGK		
7									GEAR, Overdrive Annulus
	04761010	1	T				DGK		
		1	J				DGK		
8									SNAP RING, 5.25 OD
	04461059	1	T				DGK		
		1	J				DGK		
9									SNAP RING, 6.00 OD
	04461060	2	T				DGK		
		2	J				DGK		
10									DRUM, Automatic Transmission
	04461040	1	T				DGK		
		1	J				DGK		
11									SNAP RING, 2.1875 OD
	04461063	1	T				DGK		
		1	J				DGK		
12									SPRING, Direct Clutch
	04461027	1	T				DGK		
		1	J				DGK		

GRAND CHEROKEE (WJ)

SERIES	LINE	BODY	ENGINE	TRANSMISSION
H = Laredo	T = JEEP - 2WD	74 = SPORT UTILITY 4-DR	ERH = Engine - 4.0L Power Tech I-6	DGK = 4 Speed Auto, 42RE
M = Sport	J = JEEP - 4WD		EVA = Engine- 4.7L V8 MPI	DGQ = 5 Speed Auto, 45RFE
P = Limited	U = JEEP - 4WD (RHD)		EVC = Engine - 4.7L HO V8 MPI	DG0 = All Automatic Transmissions
S = Overland			ER0 = All 4.0L 6 Cyl. Gas	
			EV0 = All 4.7L Gas	

AR = use ase required - = Non illustrrated part

Overdrive Gear Train [42RE] [DGK]
Figure 42RE-1010

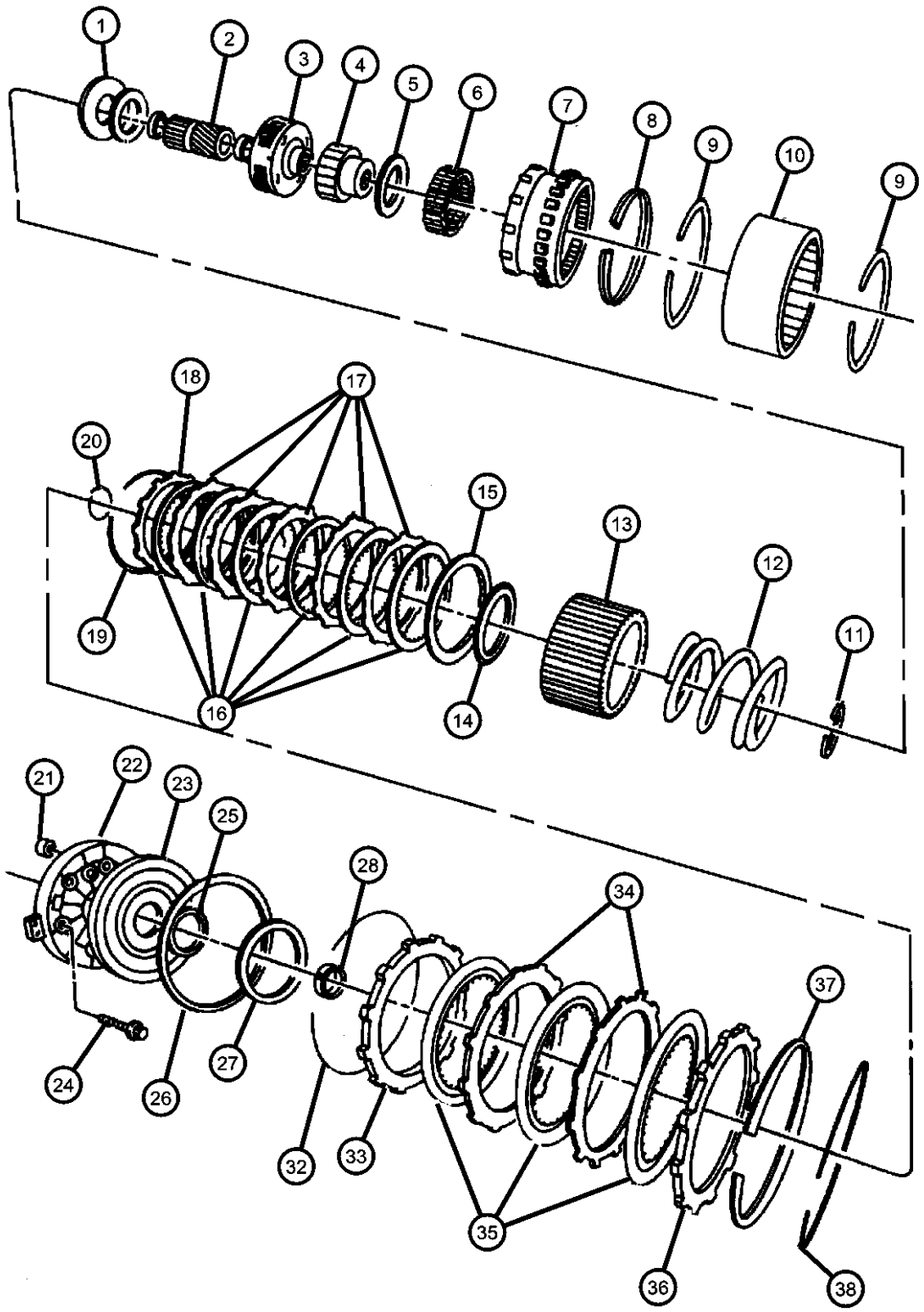

ITEM	PART NUMBER	QTY	LINE	SERIES	BODY	ENGINE	TRANS	TRIM	DESCRIPTION
13									HUB, Direct Clutch
	04461072	1	T				DGK		
		1	J				DGK		
14									THRUST BEARING, Overdrive
	04446724	1	T				DGK		
		1	J				DGK		
15									PLATE, Transmission Clutch Reaction
	04461030	1	T				DGK		
		1	J				DGK		
16									DISC, Direct Clutch
	04461042	6	T				DGK		
		6	J				DGK		
17									PLATE, Transmission Clutch Reaction
	04461054	5	T				DGK		
		5	J				DGK		
18									PLATE, Transmission Clutch Reaction
	04461031	1	T				DGK		
		1	J				DGK		
19									SPRING, Direct Clutch
	04461032	1	J				DGK		
		1	T				DGK		
20									SNAP RING, 1.875" OD
	04461064	1	T				DGK		
		1	J				DGK		
21									FILTER, Overdrive Clutch
	04412583	1	T				DGK		
		1	J				DGK		
22									RETAINER, Transmission Overdrive Clutch Piston
	04617246	1	T				DGK		
		1	J				DGK		
23									PISTON, Overdrive Clutch

GRAND CHEROKEE (WJ)

SERIES	LINE	BODY	ENGINE	TRANSMISSION
H = Laredo M = Sport P = Limited S = Overland	T = JEEP - 2WD J = JEEP - 4WD U = JEEP - 4WD (RHD)	74 = SPORT UTILITY 4-DR	ERH = Engine - 4.0L Power Tech I-6 EVA = Engine- 4.7L V8 MPI EVC = Engine - 4.7L HO V8 MPI ER0 = All 4.0L 6 Cyl. Gas EV0 = All 4.7L Gas	DGK = 4 Speed Auto, 42RE DGQ = 5 Speed Auto, 45RFE DG0 = All Automatic Transmissions

AR = use ase required - = Non illustrrated part

Overdrive Gear Train [42RE] [DGK]
Figure 42RE-1010

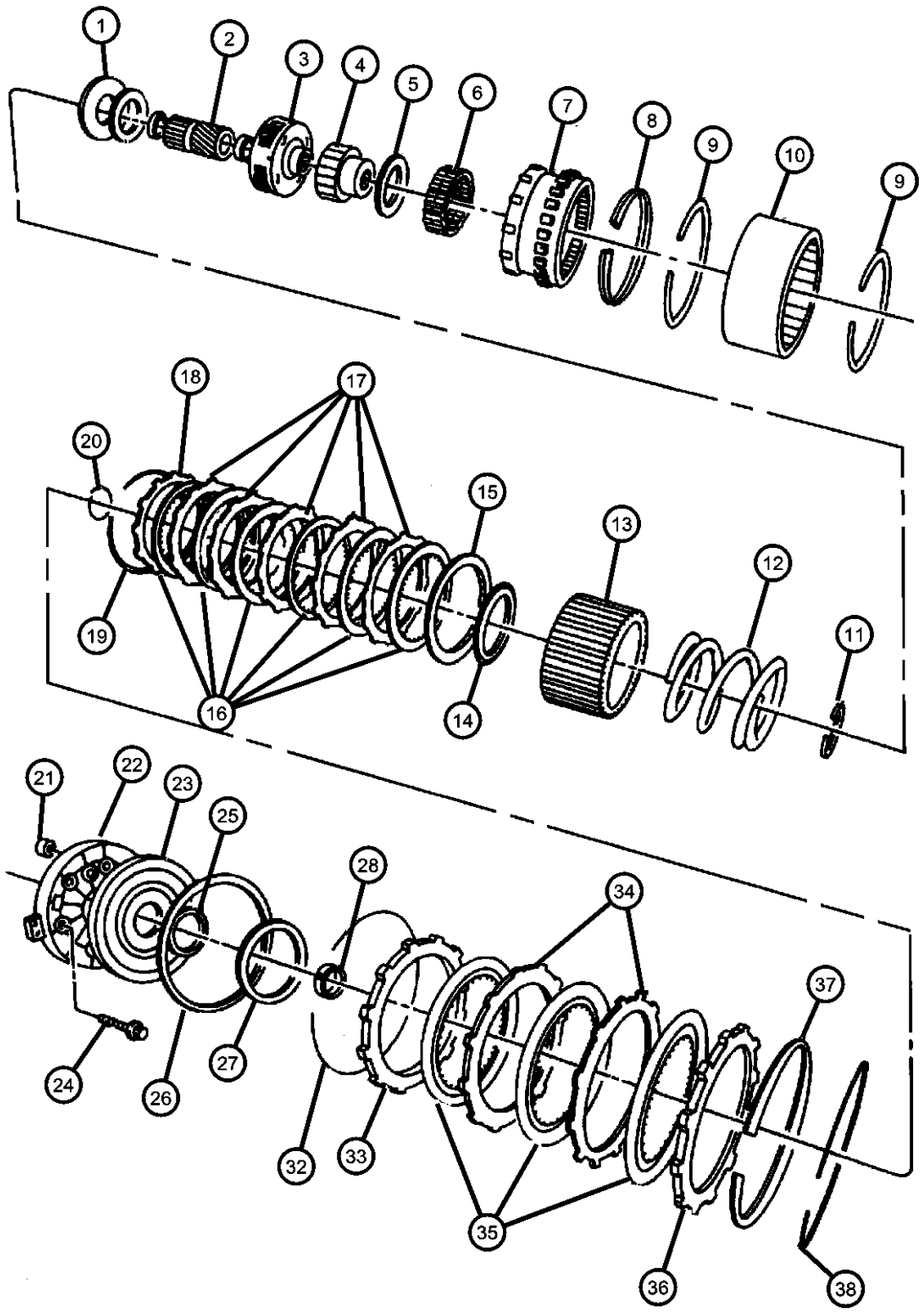

ITEM	PART NUMBER	QTY	LINE	SERIES	BODY	ENGINE	TRANS	TRIM	DESCRIPTION
	52118599	1	T				DGK		
		1	J				DGK		
24									BOLT, Hex Head, .25-28x1-5/8
	06033479	6	T				DGK		
		6	J				DGK		
25									SEAL, Overdrive Clutch Piston
	04431696	1	T				DGK		
		1	J				DGK		
26									SEAL, Overdrive Clutch Piston
	04431696	1	T				DGK		
		1	J				DGK		
27									PLATE, Transmission O/Drive Clutch
	04431585	1	T				DGK		.123“-.125“ Thick
		1	J				DGK		.123“-.125“ Thick
	04431586	1	T				DGK		.153“-.155“ Thick
		1	J				DGK		.153“-.155“ Thick
	04431587	1	T				DGK		.183“-.185“ Thick
		1	J				DGK		.183“-.185“ Thick
	04431588	1	T				DGK		.213“-.215“ Thick
		1	J				DGK		.213“-.215“ Thick
	04431590	1	T				DGK		.243“-.245“ Thick
		1	J				DGK		.243“-.245“ Thick
	04431731	1	T				DGK		.138“-.140“ Thick
		1	J				DGK		.138“-.140“ Thick
	04431732	1	T				DGK		.168“-.170“ Thick
		1	J				DGK		.168“-.170“ Thick
	04431733	1	T				DGK		.198“-.200“ Thick
		1	J				DGK		.198“-.200“ Thick
	04431734	1	T				DGK		.228“-.245“ Thick
		1	J				DGK		.228“-.245“ Thick
	04431735	1	T				DGK		.108“-.110“ Thick
		1	J				DGK		.108“-.110“ Thick

GRAND CHEROKEE (WJ)

SERIES	LINE	BODY	ENGINE	TRANSMISSION
H = Laredo M = Sport P = Limited S = Overland	T = JEEP - 2WD J = JEEP - 4WD U = JEEP - 4WD (RHD)	74 = SPORT UTILITY 4-DR	ERH = Engine - 4.0L Power Tech I-6 EVA = Engine- 4.7L V8 MPI EVC = Engine - 4.7L HO V8 MPI ER0 = All 4.0L 6 Cyl. Gas EV0 = All 4.7L Gas	DGK = 4 Speed Auto, 42RE DGQ = 5 Speed Auto, 45RFE DG0 = All Automatic Transmissions

AR = use ase required - = Non illustrrated part

Overdrive Gear Train [42RE] [DGK]
Figure 42RE-1010

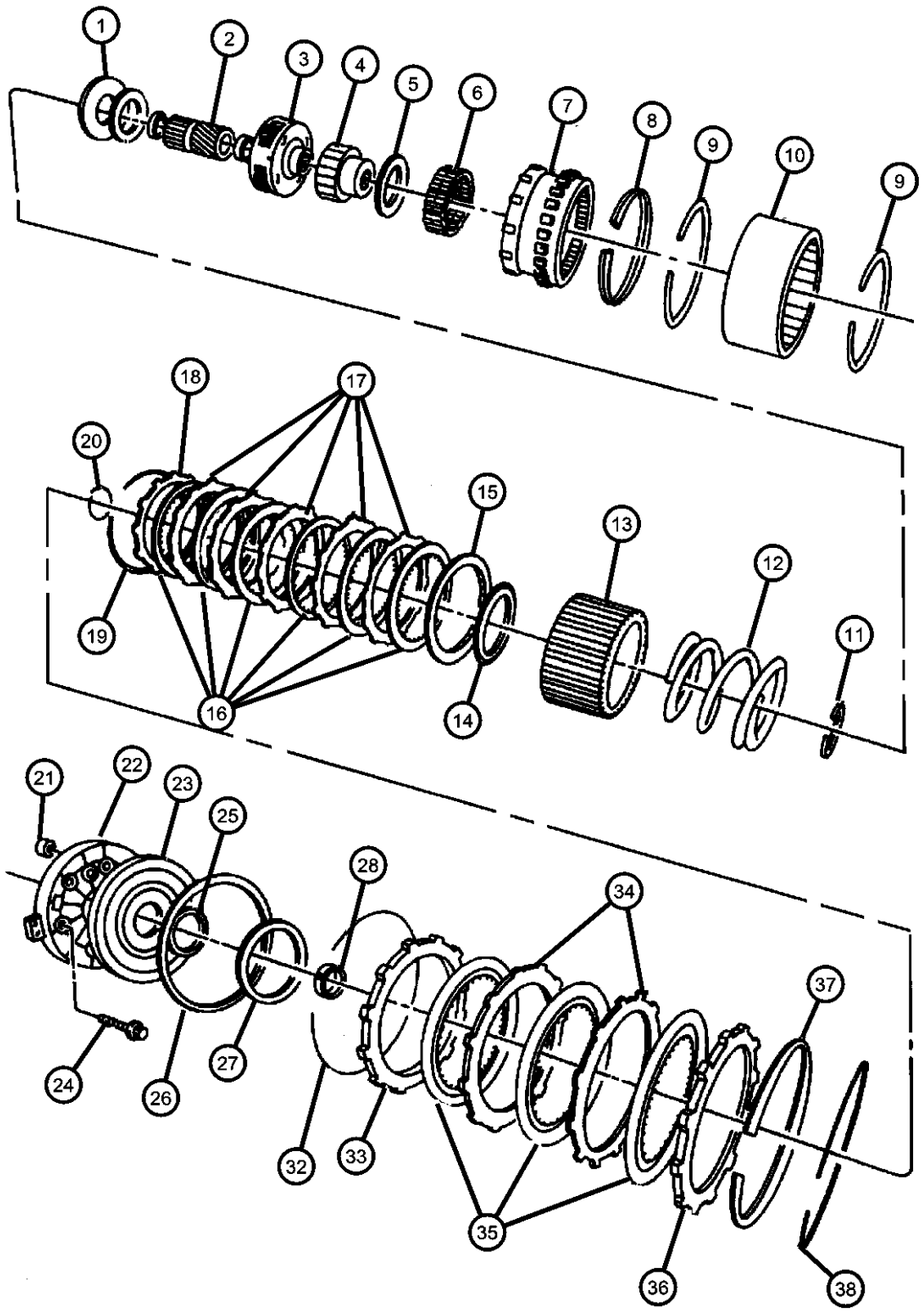

ITEM	PART NUMBER	QTY	LINE	SERIES	BODY	ENGINE	TRANS	TRIM	DESCRIPTION
28									SPACER, Intermediate Shaft, 1.58mm
	04431916	1	T				DGK		
		1	J				DGK		
-29									SPACER, Intermediate Shaft, .175
	04431917	1	T				DGK		
		1	J				DGK		
-30									SPACER, Intermediate Shaft, .193
	04431918	1	T				DGK		
		1	J				DGK		
-31									SPACER, Intermediate Shaft, .211
	04431919	1	T				DGK		
		1	J				DGK		
32									SNAP RING, Overdrive Clutch
	04461082	1	T				DGK		
		1	J				DGK		
33									PLATE, Transmission Clutch Reaction
	04461048	1	T				DGK		
		1	J				DGK		
34									PLATE, Transmission Clutch Reaction
	04461047	2	T				DGK		
		2	J				DGK		
35									DISC, Direct Clutch
	04461181	3	T				DGK		
		3	J				DGK		
36									PLATE, Transmission Clutch Reaction
	04461033	1	T				DGK		
		1	J				DGK		
37									SPRING, Overdrive Clutch
	04461066	1	T				DGK		
		1	J				DGK		
38									SNAP RING, 6.50 OD

GRAND CHEROKEE (WJ)

SERIES	LINE	BODY	ENGINE	TRANSMISSION
H = Laredo	T = JEEP - 2WD	74 = SPORT UTILITY 4-DR	ERH = Engine - 4.0L Power Tech I-6	DGK = 4 Speed Auto, 42RE
M = Sport	J = JEEP - 4WD		EVA = Engine- 4.7L V8 MPI	DGQ = 5 Speed Auto, 45RFE
P = Limited	U = JEEP - 4WD (RHD)		EVC = Engine - 4.7L HO V8 MPI	DG0 = All Automatic Transmissions
S = Overland			ER0 = All 4.0L 6 Cyl. Gas	
			EV0 = All 4.7L Gas	

Overdrive Gear Train [42RE] [DGK]
Figure 42RE-1010

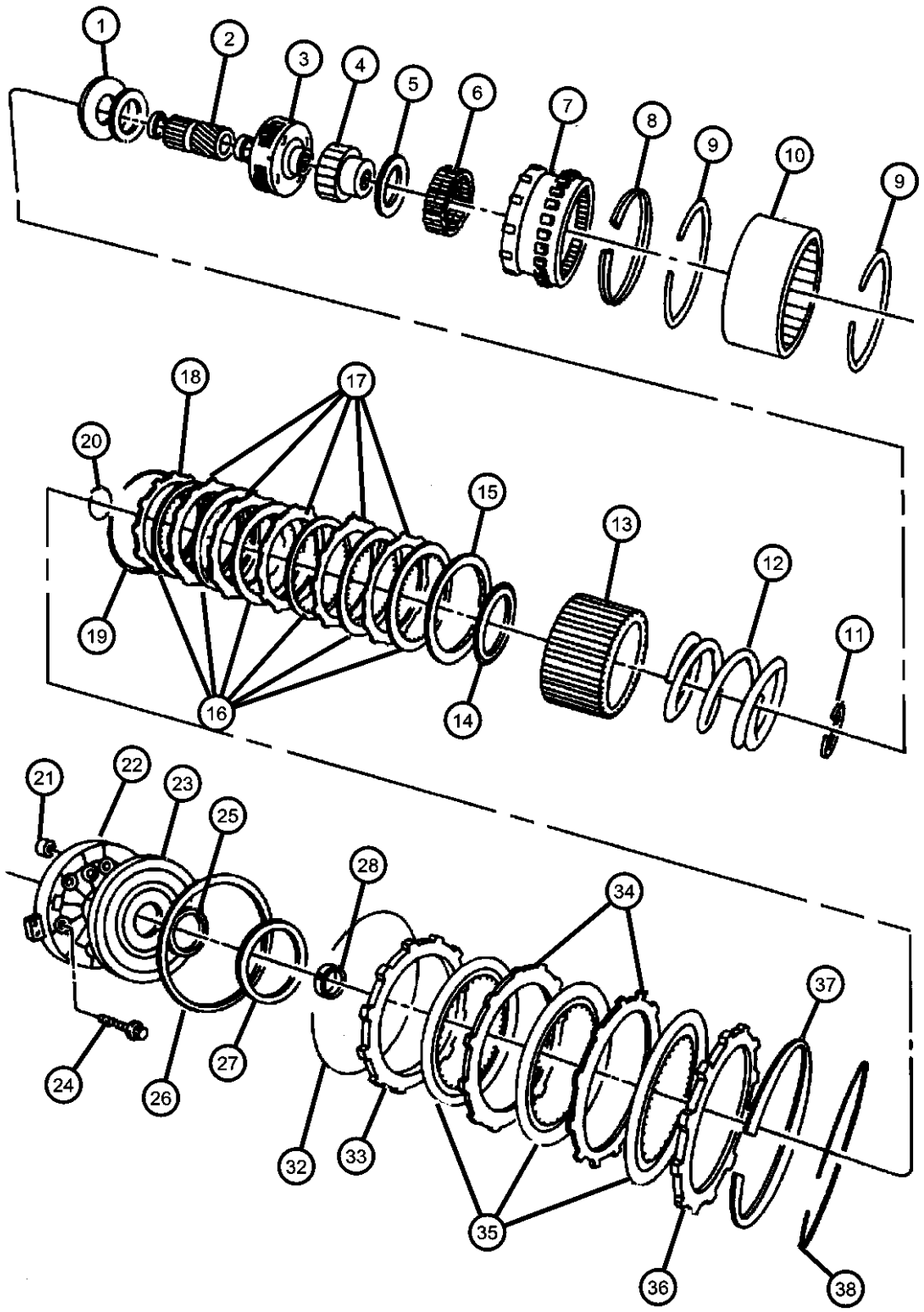

ITEM	PART NUMBER	QTY	LINE	SERIES	BODY	ENGINE	TRANS	TRIM	DESCRIPTION
	04461065	1	T				DGK		
		1	J				DGK		

GRAND CHEROKEE (WJ)

SERIES	LINE	BODY	ENGINE	TRANSMISSION
H = Laredo	T = JEEP - 2WD	74 = SPORT UTILITY 4-DR	ERH = Engine - 4.0L Power Tech I-6	DGK = 4 Speed Auto, 42RE
M = Sport	J = JEEP - 4WD		EVA = Engine- 4.7L V8 MPI	DGQ = 5 Speed Auto, 45RFE
P = Limited	U = JEEP - 4WD (RHD)		EVC = Engine - 4.7L HO V8 MPI	DG0 = All Automatic Transmissions
S = Overland			ER0 = All 4.0L 6 Cyl. Gas	
			EV0 = All 4.7L Gas	

AR = use ase required - = Non illustrrated part

Gearshift Controls [42RE] [DGK]
Figure 42RE-1210

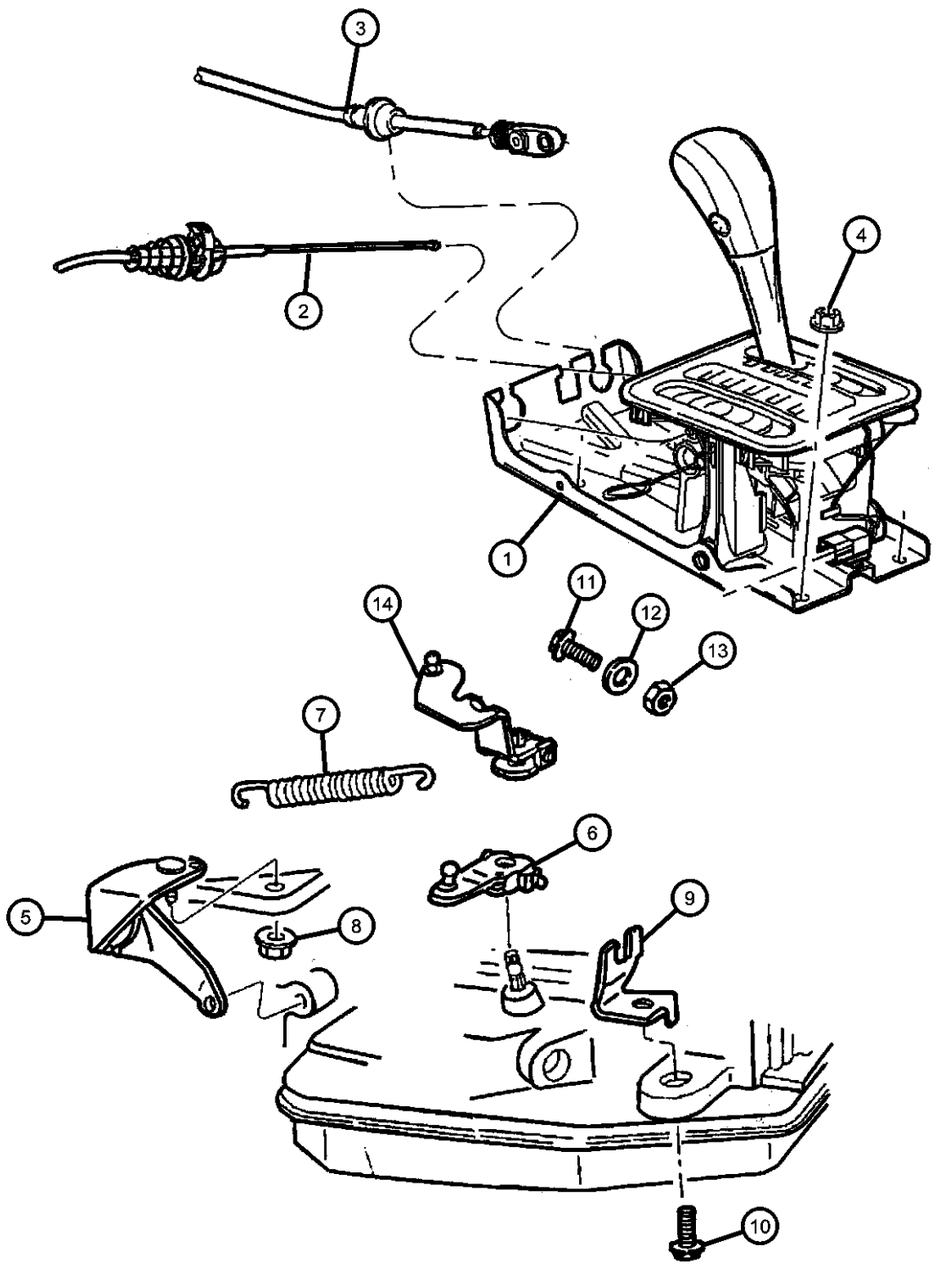

ITEM	PART NUMBER	QTY	LINE	SERIES	BODY	ENGINE	TRANS	TRIM	DESCRIPTION
NOTES: Sales Codes [DGK] = 42RE 4 Speed Automatic Transmissions [DGQ] = 45RFE 5 Speed Automatic Transmissions [DG0] = All Automatic Transmissions [ER0] = All 4.0L Gas Engines [EVA] = Next Generation 4.7L Power Tech. [EVC] = 4..7L Power Tech Ho [EV0] = All 4.7L Gas Engines									
1									HOUSING AND LEVER, Shifter
	52109670AB	1	T			ER0, EVA, EVC	DGK, DGQ		
	52109671AB	1	J	H		ER0, EV0	DGK, DGQ		With [DHP]
	52109672AB	1	J			ER0, EV0	DGK, DGQ		With [DHF] Without [DSB]
		1	J			ER0, EV0	DGK, DGQ		With [DHQ] Without [DSB]
	52109673AB	1	J			ER0, EV0, EVC	DGK, DGQ		With [DHF] And DSB]
		1	J			ER0, EV0, EVC	DGK, DGQ		With [DHQ] And [DSB]
2	52109606AA	1					DG0		CABLE, Park Interlock
3	52104060AC	1					DG0		CABLE, Gearshift Control
4	06101695	4							NUT, Hex Flange Lock, M8x1.25
5	52104057	1					DGK		BRACKET, Shift Cable
6	52104058	1					DGK		LEVER, Manual Control
7	53009055	1					DGK		SPRING, Throttle Valve Return
8	06028114	1					DGK		NUT, Hex, .437-14
9	52078867	1				ER0			BRACKET, Cable
10	06029799	1					DGK		BOLT, Hex Head, .375-16x1.00
11	00181065	1				ER0			BOLT, Hex Head, .25-20x1.00
12	00138165	1				ER0			WASHER, Lock
13	J0120375	1				ER0			NUT, Hex, .250-20
14									LEVER, Throttle Valve
	03681227	1	T				DGK		
		1	J				DGK		

GRAND CHEROKEE (WJ)

SERIES	LINE	BODY	ENGINE	TRANSMISSION
H = Laredo M = Sport P = Limited S = Overland	T = JEEP - 2WD J = JEEP - 4WD U = JEEP - 4WD (RHD)	74 = SPORT UTILITY 4-DR	ERH = Engine - 4.0L Power Tech I-6 EVA = Engine- 4.7L V8 MPI EVC = Engine - 4.7L HO V8 MPI ER0 = All 4.0L 6 Cyl. Gas EV0 = All 4.7L Gas	DGK = 4 Speed Auto, 42RE DGQ = 5 Speed Auto, 45RFE DG0 = All Automatic Transmissions

Group - 45RFE

Automatic Transmission Multi-Speed

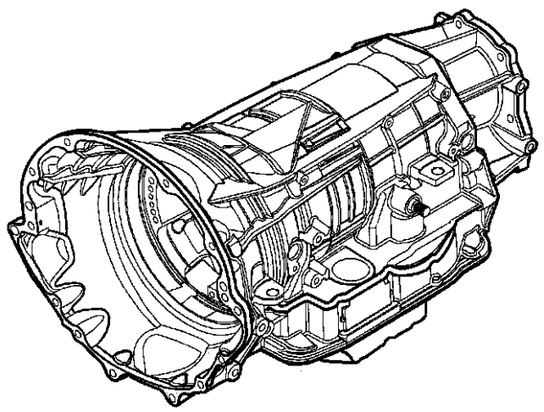

45RFE-100 Transmission Assembly 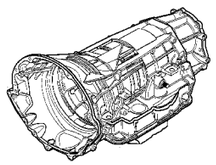	**45RFE-1200** Gearshift Controls 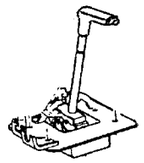	**45RFE-1300** Seal and Shim Packages 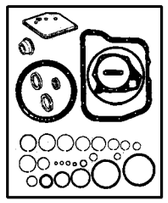	**45RFE-200** Case and Extension 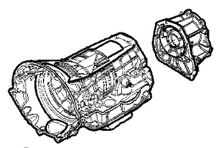
45RFE-300 Oil Pump 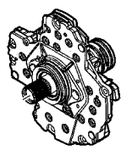	**45RFE-400** Gear Train 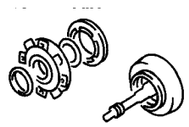	**45RFE-700** Valve Body 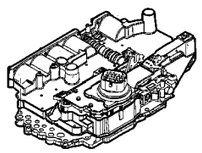	

Group - 45RFE Automatic Transmission Multi-Speed

Illustration Title — Group-Fig. No.

Transmission Assembly
Transmission [45RFE] [DGQ] ..... Fig. 45RFE - 110

Case and Extension
Case and Related Parts [45RFE] [DGQ] ..... Fig. 45RFE - 210
Adapter and Housing [45RFE] [DGQ] ..... Fig. 45RFE - 220

Oil Pump
Oil Pump [45RFE] [DGQ] ..... Fig. 45RFE - 310

Gear Train
Input Shaft [45RFE] [DGQ] ..... Fig. 45RFE - 410
Underdrive [45RFE] [DGQ] ..... Fig. 45RFE - 420
Overdrive [45RFE] [DGQ] ..... Fig. 45RFE - 430
2/4 Clutch Retainer [45RFE] [DGQ] ..... Fig. 45RFE - 440
Input/Reverse Planetary [45RFE] DGQ] ..... Fig. 45RFE - 450
Reaction Annulus/Sun Gear [45RFE] [DGQ] ..... Fig. 45RFE - 460
Low / Reverse Clutch ..... Fig. 45RFE - 470

Valve Body
Valve Body [45RFE] [DGQ] ..... Fig. 45RFE - 710
Parking Sprag [45RFE] [DGQ] ..... Fig. 45RFE - 730

Gearshift Controls
Gearshift Controls [45RFE] [DGQ] ..... Fig. 45RFE - 1210

Seal and Shim Packages
LR Clutch [45RFE] [DGQ] ..... Fig. 45RFE - 1302
Input Clutch Plate [45RFE] [DGQ] ..... Fig. 45RFE - 1303
OVERHAUL [45RFE] [DGQ] ..... Fig. 45RFE - 1304
Input Clutch [45RFE] [DGQ] ..... Fig. 45RFE - 1305
Planetary Plate [45RFE] [DGQ] ..... Fig. 45RFE - 1306
2&4 Clutch [45RFE] [DGQ] ..... Fig. 45RFE - 1310

Transmission [45RFE] [DGQ]
Figure 45RFE-110

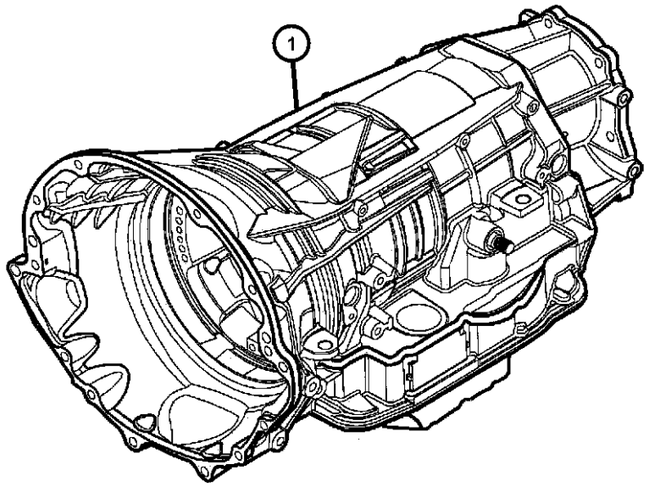

ITEM	PART NUMBER	QTY	LINE	SERIES	BODY	ENGINE	TRANS	TRIM	DESCRIPTION
NOTE; Sales Codes [DGQ] = 5 Speed Automatic Transmission [45RFE]									
1									TRANSMISSION KIT, Automatic
	05018205AB	1	T				DGQ		
	05013457AA								Mopar Automatic Transmission Fluid Quart
	05013458AA								Mopar Automatic Transmission Fluid Gallon
	05019249AB	1	J				DGQ		

GRAND CHEROKEE (WJ)

SERIES	LINE	BODY	ENGINE	TRANSMISSION
H = Laredo M = Sport P = Limited S = Overland	T = JEEP - 2WD J = JEEP - 4WD U = JEEP - 4WD (RHD)	74 = SPORT UTILITY 4-DR	ERH = Engine - 4.0L Power Tech I-6 EVA = Engine- 4.7L V8 MPI EVC = Engine - 4.7L HO V8 MPI ER0 = All 4.0L 6 Cyl. Gas EV0 = All 4.7L Gas	DGK = 4 Speed Auto, 42RE DGQ = 5 Speed Auto, 45RFE DG0 = All Automatic Transmissions

Case and Related Parts [45RFE] [DGQ]
Figure 45RFE-210

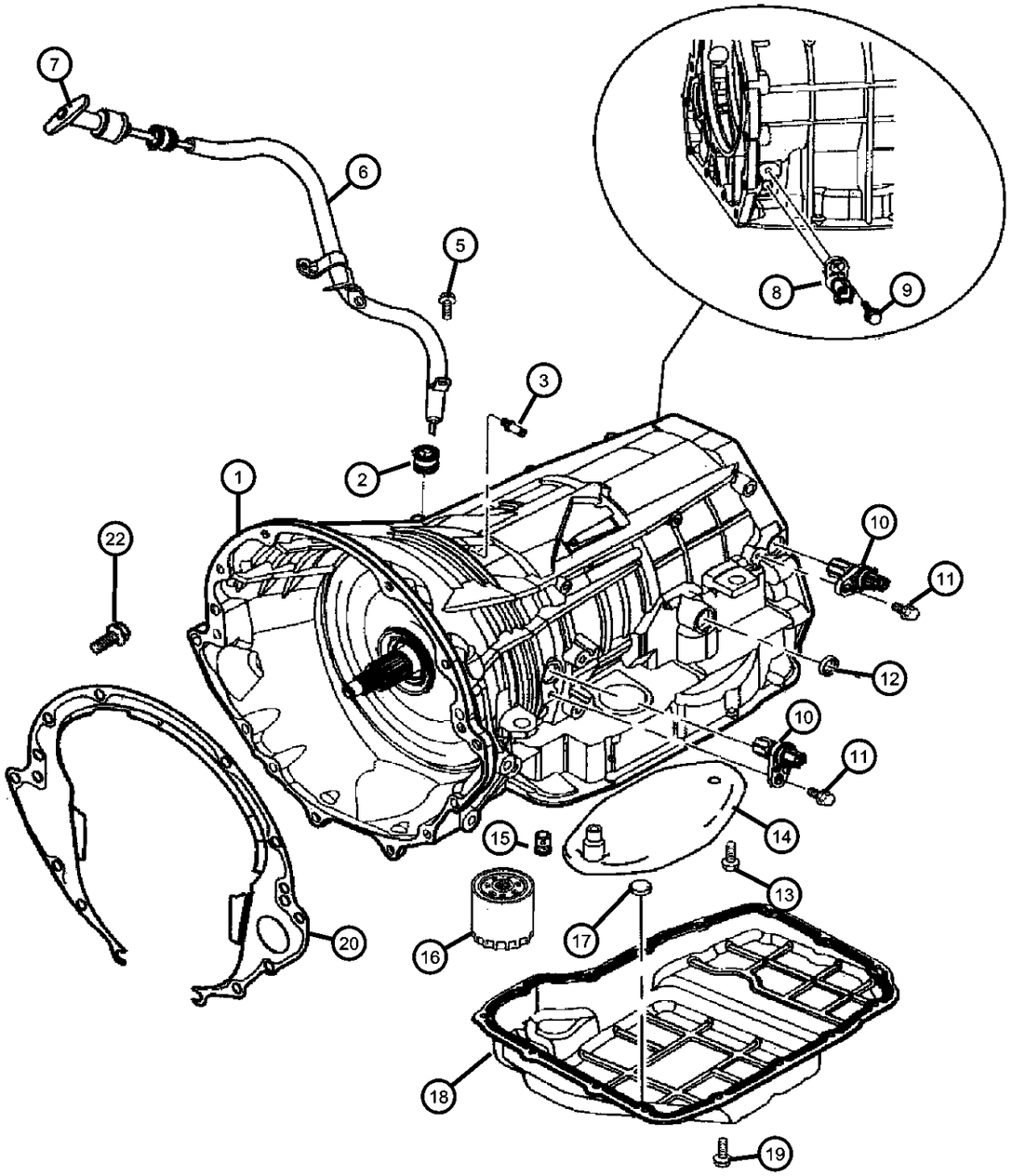

ITEM	PART NUMBER	QTY	LINE	SERIES	BODY	ENGINE	TRANS	TRIM	DESCRIPTION
NOTE; Sales Codes [DGQ] = 5 Speed Automatic Transmission [45RFE] [ER0] = All 4.0L 6 Cylinder Gas Engines [EV0] = All 4.7L Gas Engines									
1									CASE, Transmission
	04799613	1	T				DGQ		
		1	J				DGQ		
2									GROMMET
	04810021	1	T				DGQ		
		1	J				DGQ		
3									VENT, Transmission
	04799861AB	1	T				DGQ		
		1	J				DGQ		
-4	53032457AA	1					DG0		TUBE, Vent
5	00153371	1					DG0		BOLT, Hex Head, .375-16x2.25
6	53013507AA	1					DGQ		TUBE, Transmission Oil Filler
7									INDICATOR, Transmission Fluid Level
	52104137AB	1				EV0	DG0		
	52118641AC	1				ER0	DG0		
8									TRANSDUCER, Pressure Sensor
	04799758	1	T				DGQ		
		1	J				DGQ		
9									BOLT, M6x1.00x20
	06101331	1	T				DGQ		
		1	J				DGQ		
10									SENSOR, Transmission Output Speed
	04799061	2	T				DGQ		
		2	J				DGQ		
11									BOLT, M6x1.00x20
	06101331	2	T				DGQ		
		2	J				DGQ		
12									SEAL
	04799346	1	T				DGQ		

GRAND CHEROKEE (WJ)

SERIES	LINE	BODY	ENGINE	TRANSMISSION
H = Laredo M = Sport P = Limited S = Overland	T = JEEP - 2WD J = JEEP - 4WD U = JEEP - 4WD (RHD)	74 = SPORT UTILITY 4-DR	ERH = Engine - 4.0L Power Tech I-6 EVA = Engine- 4.7L V8 MPI EVC = Engine - 4.7L HO V8 MPI ER0 = All 4.0L 6 Cyl. Gas EV0 = All 4.7L Gas	DGK = 4 Speed Auto, 42RE DGQ = 5 Speed Auto, 45RFE DG0 = All Automatic Transmissions

Case and Related Parts [45RFE] [DGQ]
Figure 45RFE-210

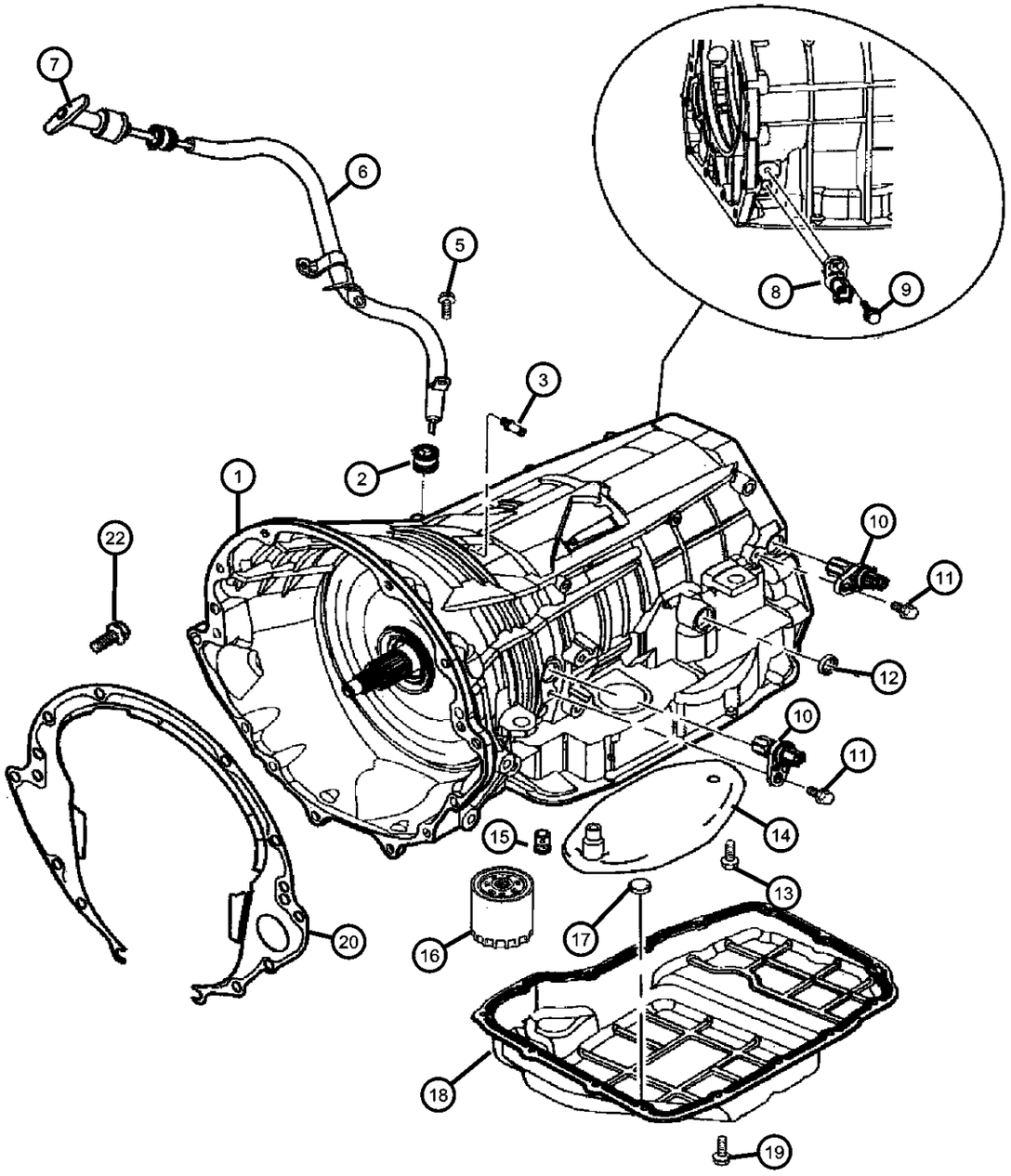

ITEM	PART NUMBER	QTY	LINE	SERIES	BODY	ENGINE	TRANS	TRIM	DESCRIPTION
		1	J				DGQ		
13									SCREW, Pan Head, M5 x 0.8 x 12.60
	06503232	7	T				DGQ		
		7	J				DGQ		
14									FILTER PACKAGE, Transmission Oil
	05013470AC	1	J				DGQ		
	05015267AC	1	T				DGQ		
15									VALVE, Flow Control
	04799681	1	T				DGQ		
		1	J				DGQ		
16									FILTER, Transmission Oil
	04799662	1	T				DGQ		
		1	J				DGQ		
17									MAGNET, Transmission
	04446728	1	T				DGQ		
		1	J				DGQ		
18									PAN, Transmission Oil
	04800078AA	1	T				DGQ		
	05013681AA	1	J				DGQ		
19									SCREW
	06101221	15	T				DGQ		
		15	J				DGQ		
20	52104133	1					DGQ		COVER, Transmission Dust
-21									NUT, Transmission Case
	04799433AB	2	T				DGQ		
		2	J				DGQ		
22	06022266	4				EV0	DG0		SCREW, Hex Head, .375-16x1.5, Transmission to Engine

GRAND CHEROKEE (WJ)

SERIES	LINE	BODY	ENGINE	TRANSMISSION
H = Laredo M = Sport P = Limited S = Overland	T = JEEP - 2WD J = JEEP - 4WD U = JEEP - 4WD (RHD)	74 = SPORT UTILITY 4-DR	ERH = Engine - 4.0L Power Tech I-6 EVA = Engine- 4.7L V8 MPI EVC = Engine - 4.7L HO V8 MPI ER0 = All 4.0L 6 Cyl. Gas EV0 = All 4.7L Gas	DGK = 4 Speed Auto, 42RE DGQ = 5 Speed Auto, 45RFE DG0 = All Automatic Transmissions

AR = use ase required - = Non illustrrated part

Adapter and Housing [45RFE] [DGQ]
Figure 45RFE-220

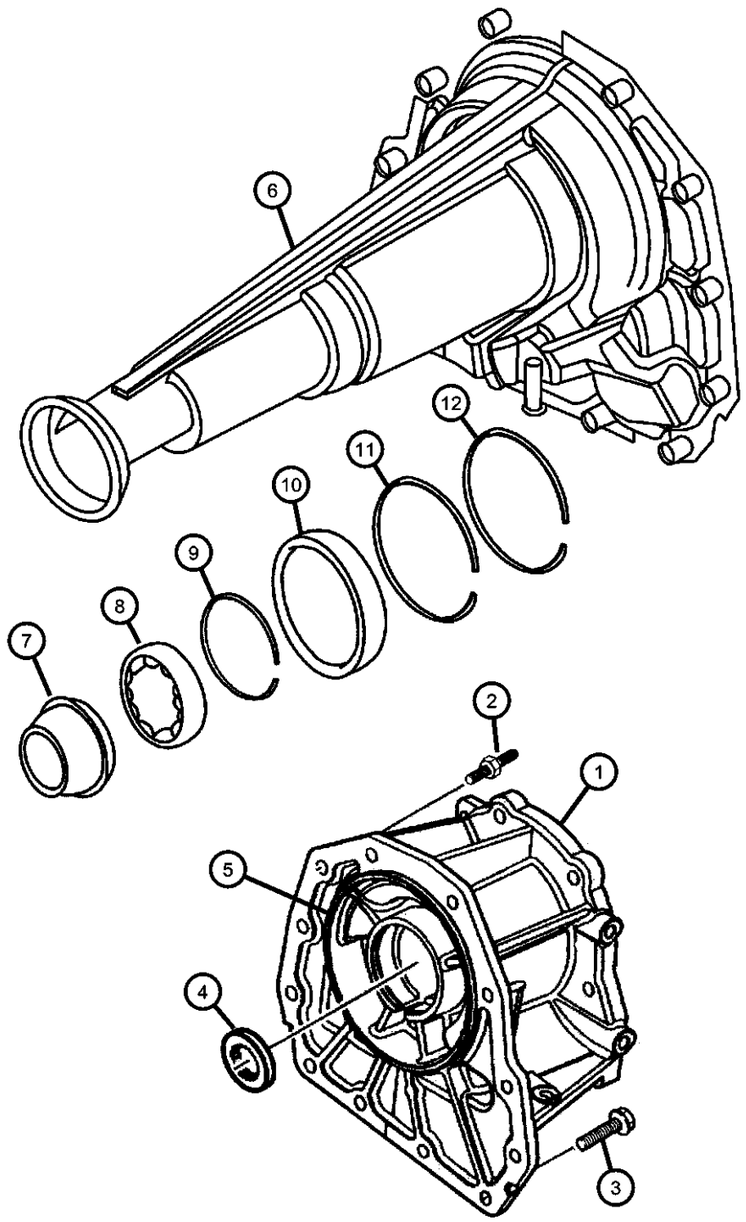

ITEM	PART NUMBER	QTY	LINE	SERIES	BODY	ENGINE	TRANS	TRIM	DESCRIPTION
NOTE:									
Sales Codes									
[DGQ] = 5 Speed Automatic Transmission [45RFE]									
1	52098690	1	J				DGQ		ADAPTER, Transfer Case
2									STUD, M10x1.5x62
	06505064AA	2	T				DGQ		
		2	J				DGQ		
3									SCREW AND WASHER, Hex Head, M10x1.5x37
	06504774	10	T				DGQ		
		10	J				DGQ		
4	05019020AA	1	J				DGQ		SEAL, Input Gear
5	04799090	1	J				DGQ		SEAL, Input
6	04799495	1	T				DGQ		HOUSING, Transmission Rear Extension
7	04531216AB	1	T				DGQ		SEAL, Output Shaft
8	02466224	1	T				DGQ		BEARING, Output Shaft
9	04461069	1	T				DGQ		SNAP RING
10	05086303AA	1	T				DGQ		BEARING, Input Gear
11	05086304AA	1	T				DGQ		SNAP RING
12	05086314AA	1	T				DGQ		SNAP RING

GRAND CHEROKEE (WJ)

SERIES	LINE	BODY	ENGINE	TRANSMISSION
H = Laredo	T = JEEP - 2WD	74 = SPORT UTILITY 4-DR	ERH = Engine - 4.0L Power Tech I-6	DGK = 4 Speed Auto, 42RE
M = Sport	J = JEEP - 4WD		EVA = Engine- 4.7L V8 MPI	DGQ = 5 Speed Auto, 45RFE
P = Limited	U = JEEP - 4WD (RHD)		EVC = Engine - 4.7L HO V8 MPI	DG0 = All Automatic Transmissions
S = Overland			ER0 = All 4.0L 6 Cyl. Gas	
			EV0 = All 4.7L Gas	

Oil Pump [45RFE] [DGQ]
Figure 45RFE-310

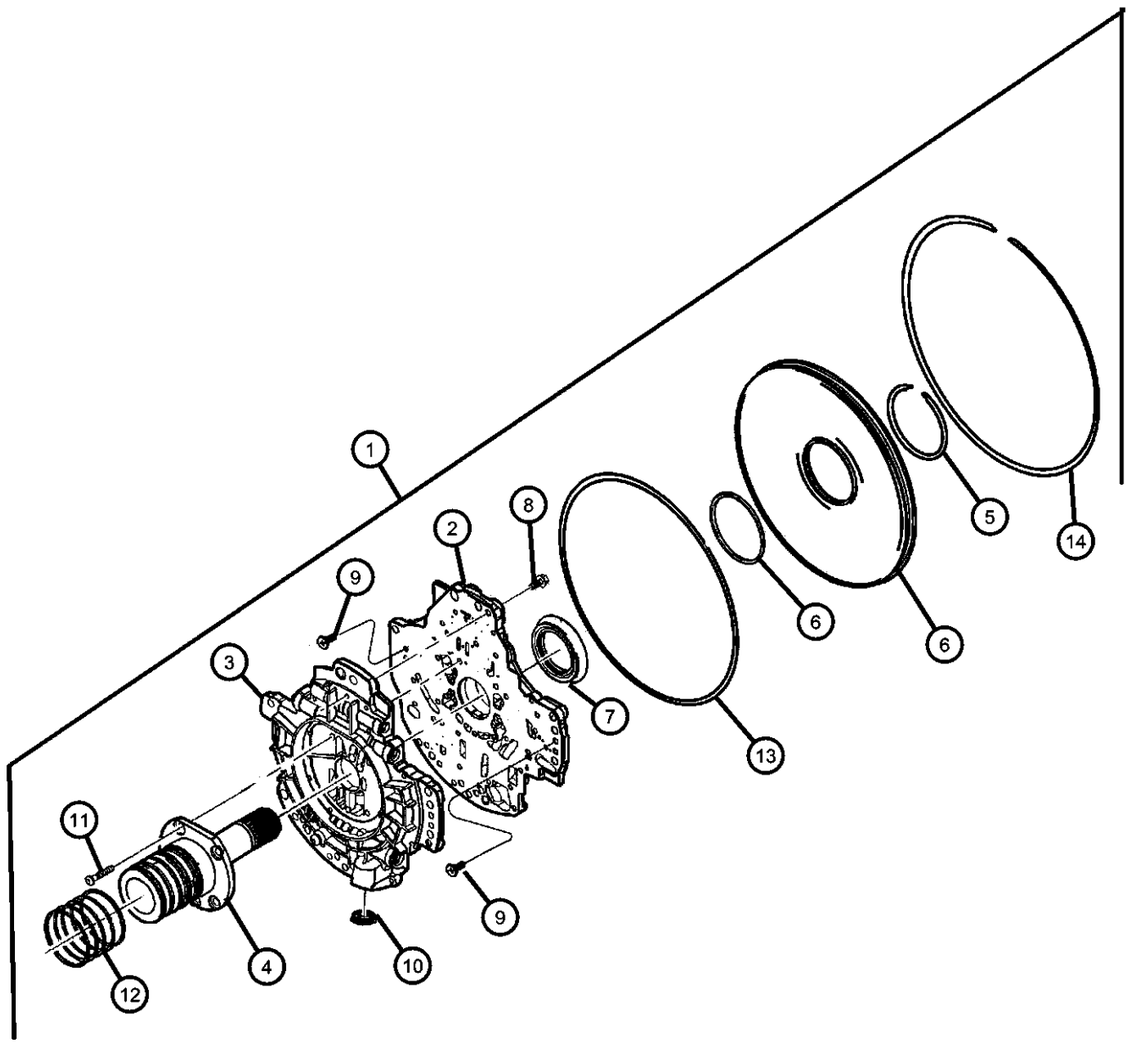

ITEM	PART NUMBER	QTY	LINE	SERIES	BODY	ENGINE	TRANS	TRIM	DESCRIPTION
1									PUMP PACKAGE, Transmission
	05072589AA	1	T				DGQ		
		1	J				DGQ		
2		1							HOUSING, Pump, (NOT SERVICED)
3		1							BODY, Oil Pump Valve, (NOT SERVICED)
4		1							SUPPORT, Reaction Shaft, (NOT SERVICED)
5									SNAP RING, Transmission
	04799082	1	T				DGQ		
		1	J				DGQ		
6									COVER, Oil Pump
	04799609	1	T				DGQ		
		1	J				DGQ		
7									SEAL, Transmission Oil Pump
	04617919	1	T				DGQ		
		1	J				DGQ		
8									SCREW AND WASHER, Pan Head, M5x.8x25
	06500215	24	T				DGQ		
		24	J				DGQ		
9									SCREW, Pan Head, M5 x 0.8 x 12.60
	06503232	1	T				DGQ		
		1	J				DGQ		
10									SEAL, Oil Pump
	04799964AB	1	T				DGQ		
		1	J				DGQ		
11									SCREW, Button Head
	06504661	5	J				DGQ		
		5	T				DGQ		
12									RING, Transmission
	04799056AB	5	T				DGQ		
		5	J				DGQ		
13									O RING, Oil Pump, .

GRAND CHEROKEE (WJ)

SERIES	LINE	BODY	ENGINE	TRANSMISSION
H = Laredo M = Sport P = Limited S = Overland	T = JEEP - 2WD J = JEEP - 4WD U = JEEP - 4WD (RHD)	74 = SPORT UTILITY 4-DR	ERH = Engine - 4.0L Power Tech I-6 EVA = Engine- 4.7L V8 MPI EVC = Engine - 4.7L HO V8 MPI ER0 = All 4.0L 6 Cyl. Gas EV0 = All 4.7L Gas	DGK = 4 Speed Auto, 42RE DGQ = 5 Speed Auto, 45RFE DG0 = All Automatic Transmissions

Oil Pump [45RFE] [DGQ]
Figure 45RFE-310

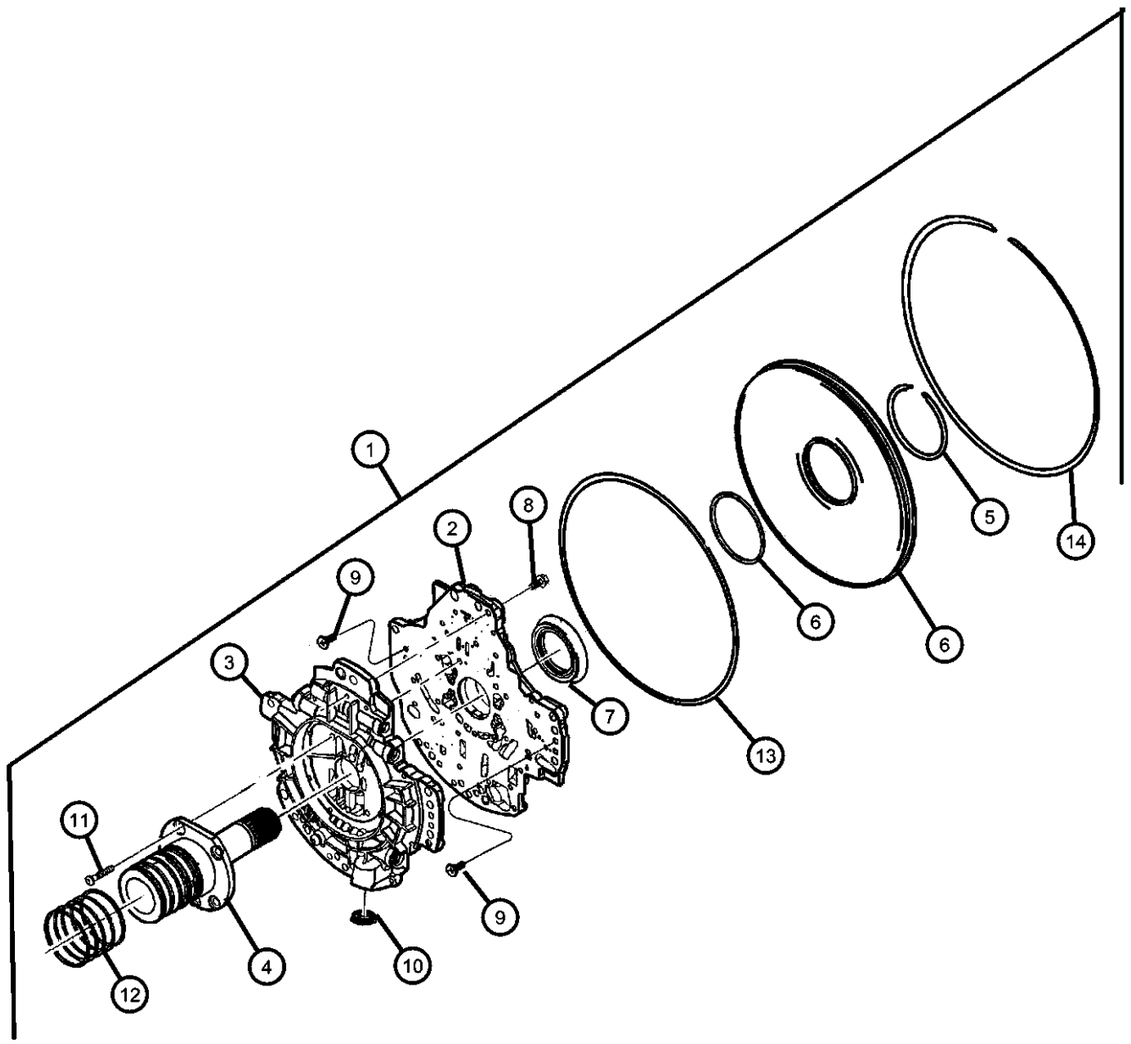

ITEM	PART NUMBER	QTY	LINE	SERIES	BODY	ENGINE	TRANS	TRIM	DESCRIPTION
	04799003	1	T				DGQ		
		1	J				DGQ		
14									SNAP RING, Transmission
	04799005	1	T				DGQ		
		1	J				DGQ		

GRAND CHEROKEE (WJ)

SERIES	LINE	BODY	ENGINE	TRANSMISSION
H = Laredo M = Sport P = Limited S = Overland	T = JEEP - 2WD J = JEEP - 4WD U = JEEP - 4WD (RHD)	74 = SPORT UTILITY 4-DR	ERH = Engine - 4.0L Power Tech I-6 EVA = Engine- 4.7L V8 MPI EVC = Engine - 4.7L HO V8 MPI ER0 = All 4.0L 6 Cyl. Gas EV0 = All 4.7L Gas	DGK = 4 Speed Auto, 42RE DGQ = 5 Speed Auto, 45RFE DG0 = All Automatic Transmissions

AR = use ase required - = Non illustrrated part

Input Shaft [45RFE] [DGQ]
Figure 45RFE-410

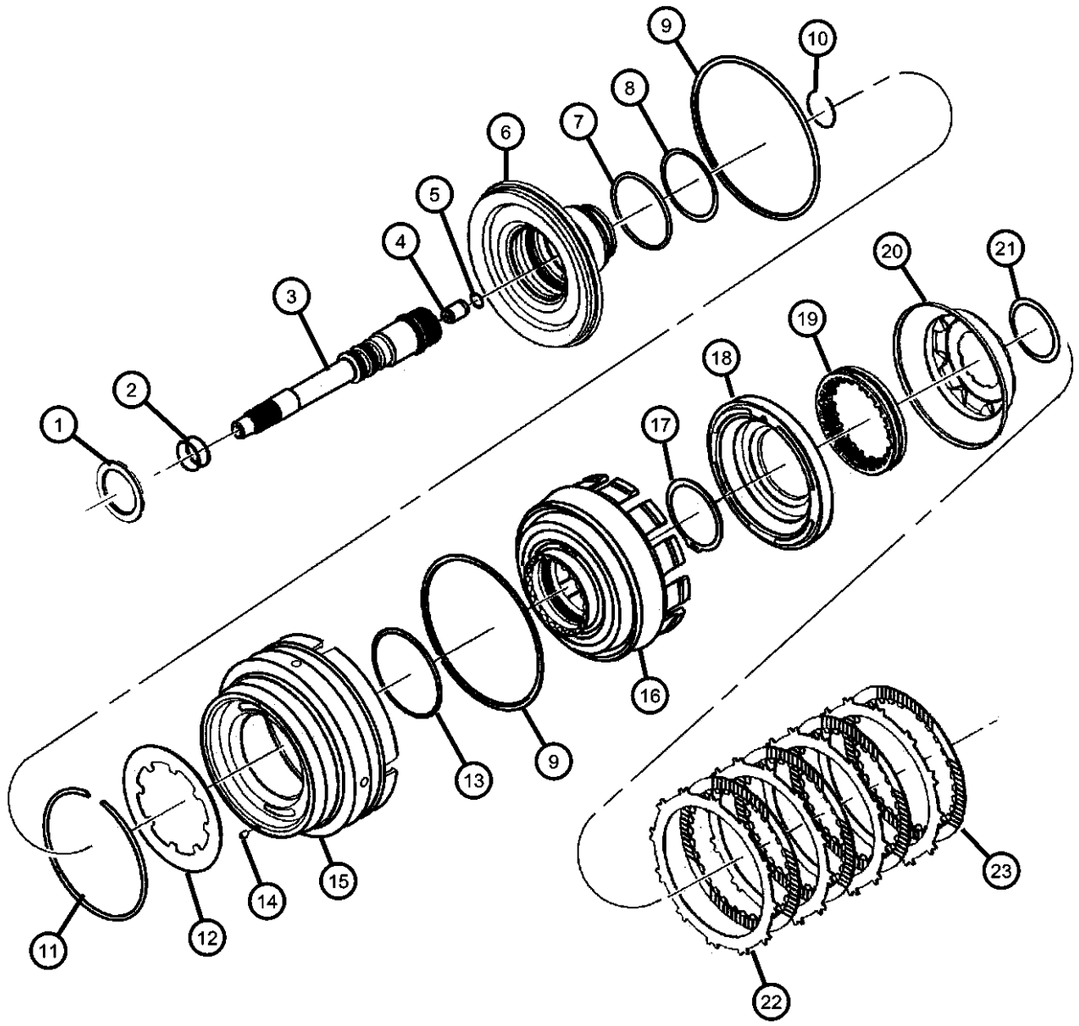

ITEM	PART NUMBER	QTY	LINE	SERIES	BODY	ENGINE	TRANS	TRIM	DESCRIPTION
NOTE; Sales Codes									
[DGQ] = 5 Speed Automatic Transmission [45RFE]									
1									THRUST BEARING, Needle Roller
	04799469	1	T				DGQ		
		1	J				DGQ		
2									SEAL, Input Shaft, PKG 05013090AA
	04799539	2	T				DGQ		
		2	J				DGQ		
3									SHAFT, Input
	04799537	1	T				DGQ		
		1	J				DGQ		
4									CHECK VALVE, Transmission
	04799974AA	1	T				DGQ		
		1	J				DGQ		
5									SNAP RING
	04799978AA	1	T				DGQ		
		1	J				DGQ		
6									HUB, Input Clutch
	04799536AC	1	T				DGQ		
		1	J				DGQ		
7									O RING, Transmission Clutch, PKG 05013090AA
	04799073	1	T				DGQ		
		1	J				DGQ		
8									O RING, Transmission Clutch, PKG 05013090AA
	04799755	1	T				DGQ		
		1	J				DGQ		
9									SEAL, Input, PKG 05013090aa
	04799090	1	T				DGQ		
		1	J				DGQ		
10									SNAP RING, Input Shaft
	04799538	1	T				DGQ		
		1	J				DGQ		

GRAND CHEROKEE (WJ)

SERIES	LINE	BODY	ENGINE	TRANSMISSION
H = Laredo M = Sport P = Limited S = Overland	T = JEEP - 2WD J = JEEP - 4WD U = JEEP - 4WD (RHD)	74 = SPORT UTILITY 4-DR	ERH = Engine - 4.0L Power Tech I-6 EVA = Engine- 4.7L V8 MPI EVC = Engine - 4.7L HO V8 MPI ER0 = All 4.0L 6 Cyl. Gas EV0 = All 4.7L Gas	DGK = 4 Speed Auto, 42RE DGQ = 5 Speed Auto, 45RFE DG0 = All Automatic Transmissions

AR = use ase required - = Non illustrrated part

Input Shaft [45RFE] [DGQ]
Figure 45RFE-410

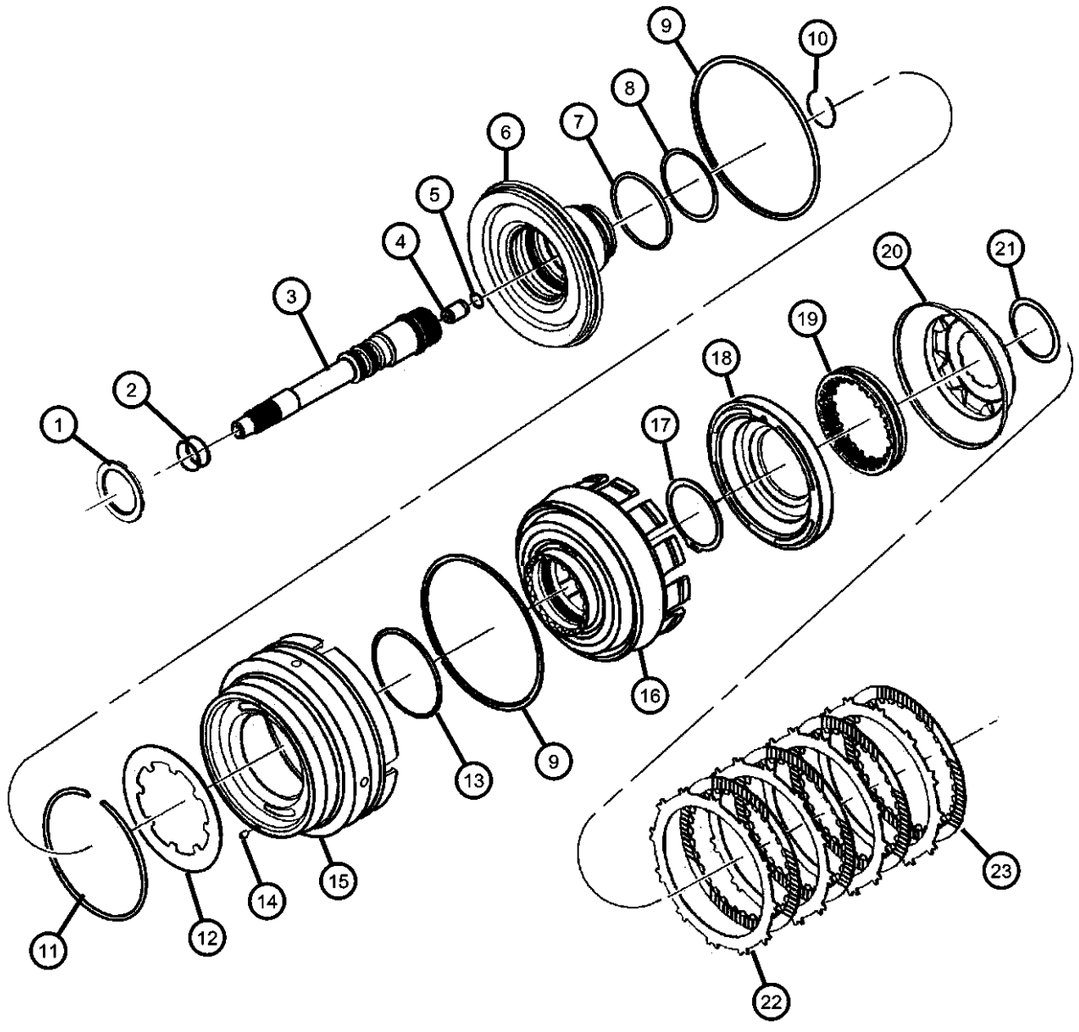

ITEM	PART NUMBER	QTY	LINE	SERIES	BODY	ENGINE	TRANS	TRIM	DESCRIPTION
11									SNAP RING, Transmission
	04799088	1	T				DGQ		
		1	J				DGQ		
12									SPRING, Piston Return
	04799087	1	T				DGQ		
		1	J				DGQ		
13									O RING, Reverse & O/Drive Clutch Piston, Transmission, PKG 05013090AA
	04799089	1	T				DGQ		
		1	J				DGQ		
14									FILTER, Reverse And O/D Clutch
	04531903	1	T				DGQ		
		1	J				DGQ		
15									PISTON, Reverse and Overdrive
	04799645	1	T				DGQ		
		1	J				DGQ		
16									RETAINER, Transmission Input Clutch
	04799648	1	T				DGQ		
		1	J				DGQ		
17									SNAP RING
	04799097	1	J				DGQ		
		1	T				DGQ		
18									PISTON, Underdrive
	04799650	1	T				DGQ		
		1	J				DGQ		
19									SPRING, Undredrive Piston, PKG 05013090AA
	04799101	1	T				DGQ		
		1	J				DGQ		
20									PISTON, Underdrive
	04799652	1	T				DGQ		
		1	J				DGQ		

GRAND CHEROKEE (WJ)

SERIES	LINE	BODY	ENGINE	TRANSMISSION
H = Laredo M = Sport P = Limited S = Overland	T = JEEP - 2WD J = JEEP - 4WD U = JEEP - 4WD (RHD)	74 = SPORT UTILITY 4-DR	ERH = Engine - 4.0L Power Tech I-6 EVA = Engine- 4.7L V8 MPI EVC = Engine - 4.7L HO V8 MPI ER0 = All 4.0L 6 Cyl. Gas EV0 = All 4.7L Gas	DGK = 4 Speed Auto, 42RE DGQ = 5 Speed Auto, 45RFE DG0 = All Automatic Transmissions

Input Shaft [45RFE] [DGQ]
Figure 45RFE-410

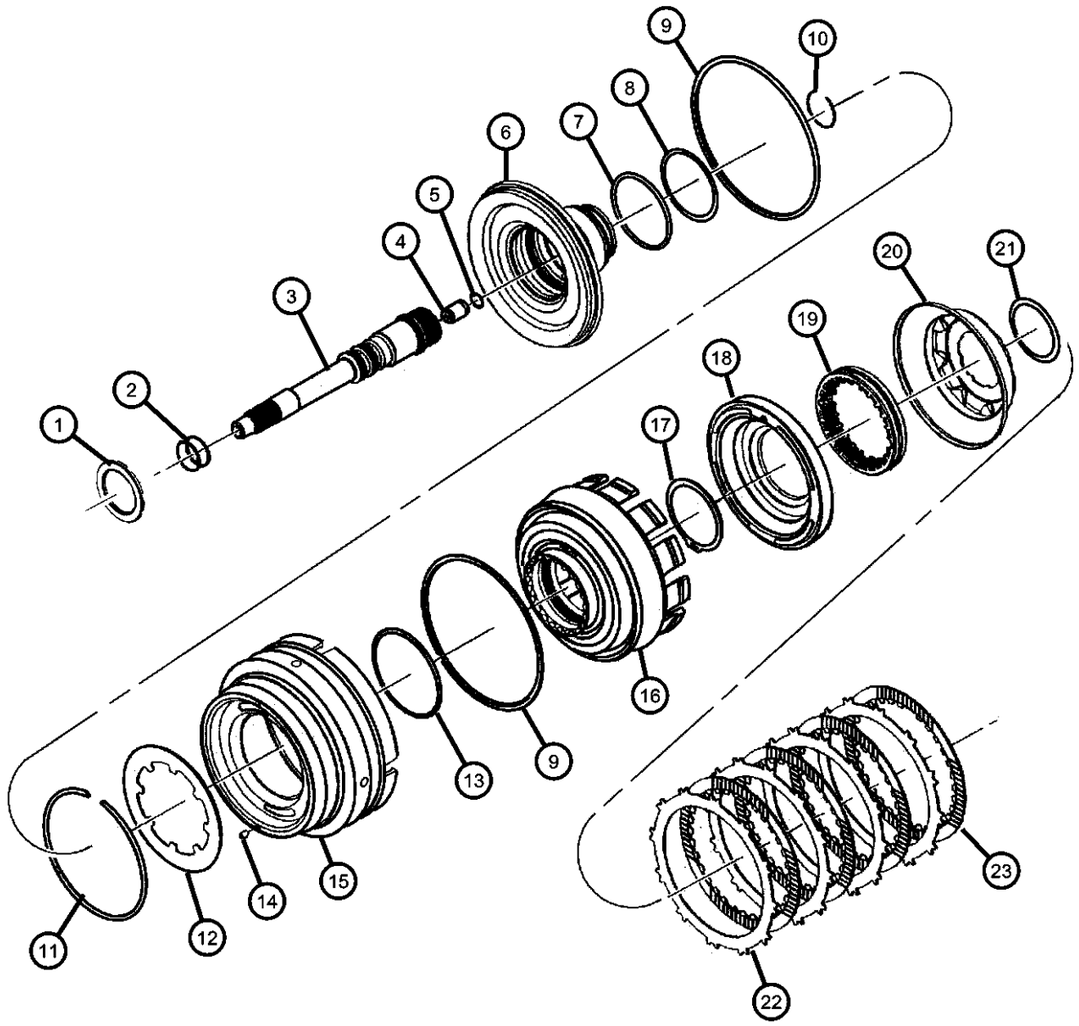

ITEM	PART NUMBER	QTY	LINE	SERIES	BODY	ENGINE	TRANS	TRIM	DESCRIPTION
21									SNAP RING, Transmission, PKG 05013090AA
	04799103	1	T				DGQ		
		1	J				DGQ		
22		1							PLATE, PKG 05013090AA, (NOT SERVICED)
23		1							DISC, Clutch, PKG 05013090AA, (NOT SERVICED)

GRAND CHEROKEE (WJ)

SERIES	LINE	BODY	ENGINE	TRANSMISSION
H = Laredo M = Sport P = Limited S = Overland	T = JEEP - 2WD J = JEEP - 4WD U = JEEP - 4WD (RHD)	74 = SPORT UTILITY 4-DR	ERH = Engine - 4.0L Power Tech I-6 EVA = Engine- 4.7L V8 MPI EVC = Engine - 4.7L HO V8 MPI ER0 = All 4.0L 6 Cyl. Gas EV0 = All 4.7L Gas	DGK = 4 Speed Auto, 42RE DGQ = 5 Speed Auto, 45RFE DG0 = All Automatic Transmissions

AR = use ase required - = Non illustrrated part

Underdrive [45RFE] [DGQ]
Figure 45RFE-420

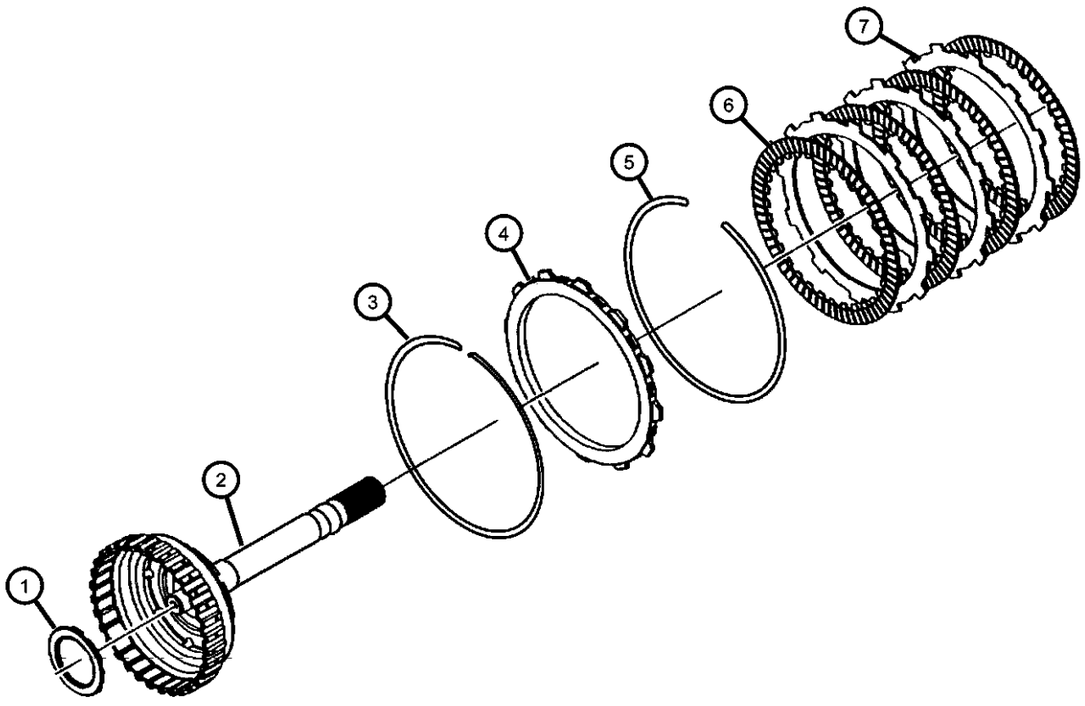

ITEM	PART NUMBER	QTY	LINE	SERIES	BODY	ENGINE	TRANS	TRIM	DESCRIPTION
NOTE; Sales Codes [DGQ] = 5 Speed Automatic Transmission [45RFE]									
1									THRUST BEARING, Needle Roller
	04799469	1	T				DGQ		
		1	J				DGQ		
2									HUB AND SHAFT, Underdrive Clutch
	04799546	1	T				DGQ		
		1	J				DGQ		
3									SNAP RING, Transmission
	04799760	1	T				DGQ		
		1	J				DGQ		
4									PLATE, Transmission Clutch Reaction
	04799107AB	AR	T				DGQ		7.00/7.16 mm Thick
		AR	J				DGQ		7.00/7.16mm Thick
	04799108AB	AR	T				DGQ		3.05/3.21mm Thick
		AR	J				DGQ		3.05/3.21mm Thick
	04799109AB	AR	T				DGQ		3.60/3.76mm Thick
		AR	J				DGQ		3.60/3.76mm Thick
5		AR							SNAP RING, PKG 05013090AA, (NOT SERVICED),
6		AR							DISC, Clutch, PKG 05013090AA, (NOT SERVICED)
7		AR							PLATE, PKG 05013090AA, (NOT SERVICED)

GRAND CHEROKEE (WJ)

SERIES	LINE	BODY	ENGINE	TRANSMISSION
H = Laredo M = Sport P = Limited S = Overland	T = JEEP - 2WD J = JEEP - 4WD U = JEEP - 4WD (RHD)	74 = SPORT UTILITY 4-DR	ERH = Engine - 4.0L Power Tech I-6 EVA = Engine- 4.7L V8 MPI EVC = Engine - 4.7L HO V8 MPI ER0 = All 4.0L 6 Cyl. Gas EV0 = All 4.7L Gas	DGK = 4 Speed Auto, 42RE DGQ = 5 Speed Auto, 45RFE DG0 = All Automatic Transmissions

Overdrive [45RFE] [DGQ]
Figure 45RFE-430

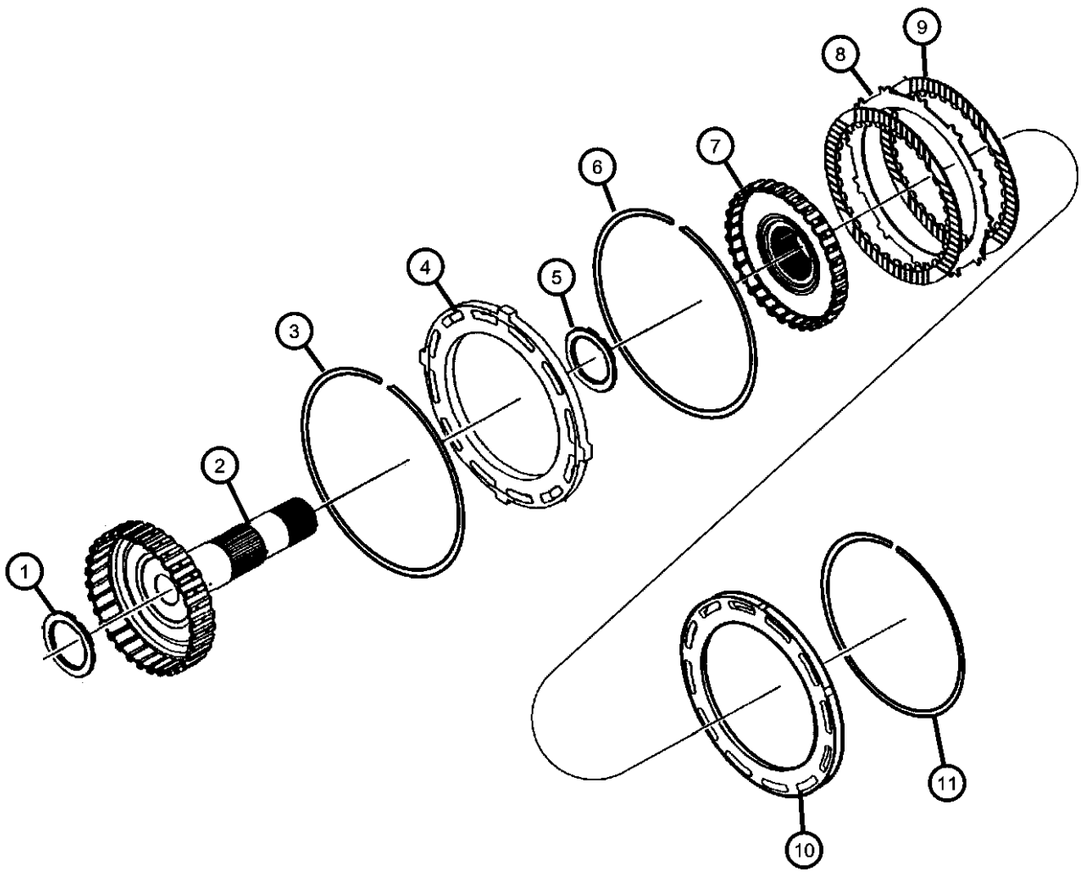

ITEM	PART NUMBER	QTY	LINE	SERIES	BODY	ENGINE	TRANS	TRIM	DESCRIPTION
NOTE; Sales Codes [DGQ] = 5 Speed Automatic Transmission [45RFE]									
1									THRUST BEARING, Needle Roller
	04799469	1	T				DGQ		
		1	J				DGQ		
2									HUB AND SHAFT, Overdrive Clutch
	04799550	1	T				DGQ		
		1	J				DGQ		
3									SNAP RING, Overdrive Clutch
	04799118	1	T				DGQ		
		1	J				DGQ		
4									PLATE, Clutch Pressure
	04799116	1	T				DGQ		
		1	J				DGQ		
5									THRUST BEARING, Needle Roller
	04799469	1	T				DGQ		
		1	J				DGQ		
6									SNAP RING, Transmission
	04799117	1	T				DGQ		
		1	J				DGQ		
7									HUB AND SHAFT, Reverse Clutch
	04799556	1	T				DGQ		
		1	J				DGQ		
8		1							PLATE, PKG 05013090AA, (NOT SERVICED)
9		1							DISC, Clutch, PKG 05013090AA, (NOT SERVICED)
10									PLATE, Transmission Clutch Reaction
	04799121	1	T				DGQ		
		1	J				DGQ		
11		1							SNAP RING, PKG 05013090AA, (NOT SERVICED)

GRAND CHEROKEE (WJ)

SERIES	LINE	BODY	ENGINE	TRANSMISSION
H = Laredo M = Sport P = Limited S = Overland	T = JEEP - 2WD J = JEEP - 4WD U = JEEP - 4WD (RHD)	74 = SPORT UTILITY 4-DR	ERH = Engine - 4.0L Power Tech I-6 EVA = Engine- 4.7L V8 MPI EVC = Engine - 4.7L HO V8 MPI ER0 = All 4.0L 6 Cyl. Gas EV0 = All 4.7L Gas	DGK = 4 Speed Auto, 42RE DGQ = 5 Speed Auto, 45RFE DG0 = All Automatic Transmissions

2/4 Clutch Retainer [45RFE] [DGQ]
Figure 45RFE-440

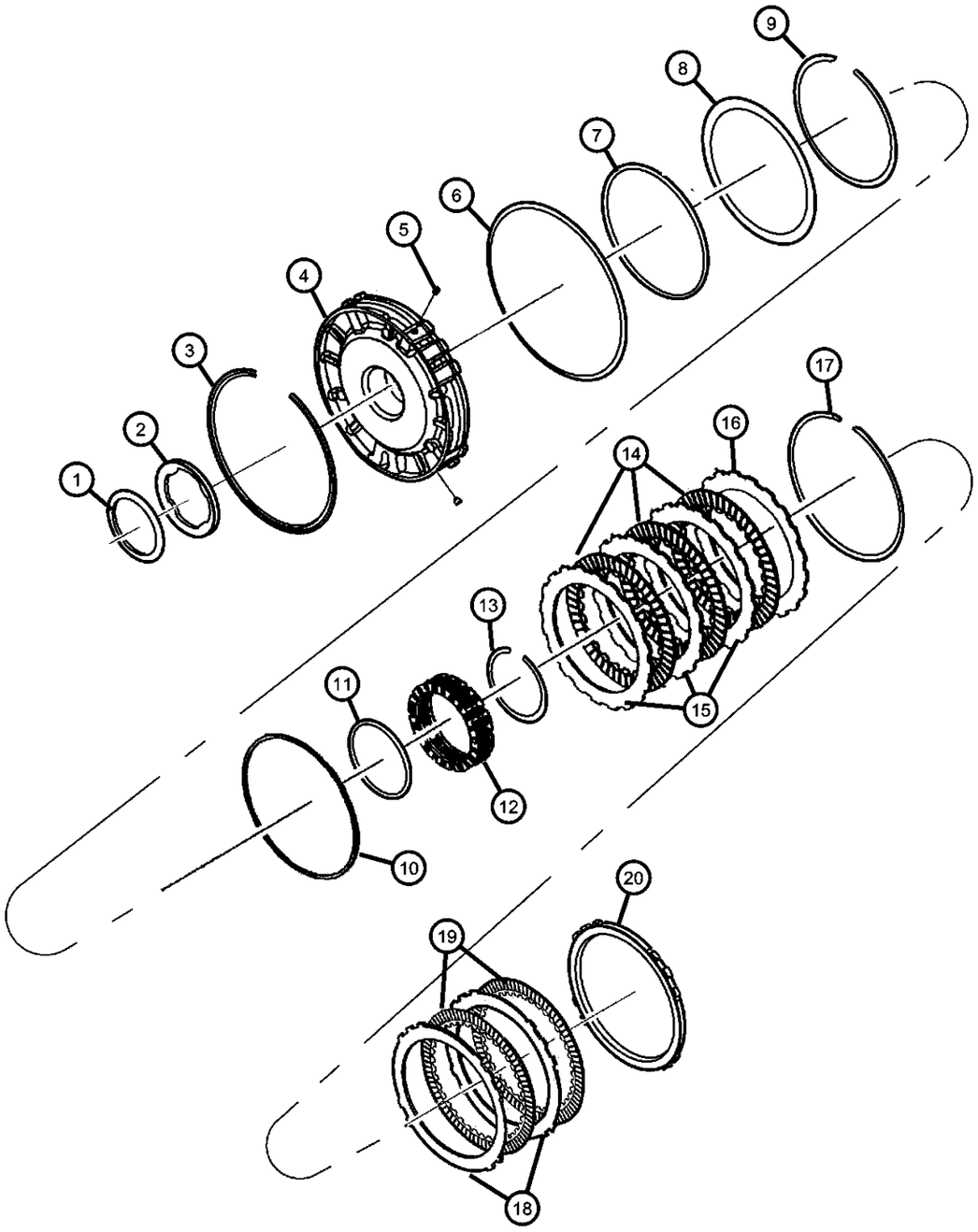

ITEM	PART NUMBER	QTY	LINE	SERIES	BODY	ENGINE	TRANS	TRIM	DESCRIPTION
NOTE; Sales Codes									
[DGQ] = 5 Speed Automatic Transmission [45RFE]									
1									THRUST BEARING, Needle Roller
	04799936AB	1	T				DGQ		
		1	J				DGQ		
2		1							PLATE, Clutch Hub Thrust, PKG 05013093AB, (NOT SERVICED)
3									SNAP RING, Transmission
	04799680AB	1	T				DGQ		
		1	J				DGQ		
4									RETAINER, Transmission 2nd and 4th Clutch Piston
	04799498	1	T				DGQ		
		1	J				DGQ		
5									BLEED ORIFICE, Transmission
	04799086	1	T				DGQ		
		1	J				DGQ		
6									SNAP RING, Transmission
	04799174	1	T				DGQ		
		1	J				DGQ		
7		1							RING, PKG 05013093AB, (NOT SERVICED)
8									SPRING, 2nd And 4th Clutch Piston
	04799521	1	T				DGQ		
		1	J				DGQ		
9									SNAP RING, Transmission
	04799522AB	1	T				DGQ		
		1	J				DGQ		
10		1							RING, PKG 05013093AB, (NOT SERVICED)
11		1							RING, PKG 05013093AB, (NOT SERVICED)
12									SPRING, 2nd And 4th Clutch Piston
	04799527AB	1	T				DGQ		
		1	J				DGQ		
13									SNAP RING, Transmission

GRAND CHEROKEE (WJ)

SERIES	LINE	BODY	ENGINE	TRANSMISSION
H = Laredo M = Sport P = Limited S = Overland	T = JEEP - 2WD J = JEEP - 4WD U = JEEP - 4WD (RHD)	74 = SPORT UTILITY 4-DR	ERH = Engine - 4.0L Power Tech I-6 EVA = Engine- 4.7L V8 MPI EVC = Engine - 4.7L HO V8 MPI ER0 = All 4.0L 6 Cyl. Gas EV0 = All 4.7L Gas	DGK = 4 Speed Auto, 42RE DGQ = 5 Speed Auto, 45RFE DG0 = All Automatic Transmissions

2/4 Clutch Retainer [45RFE] [DGQ]
Figure 45RFE-440

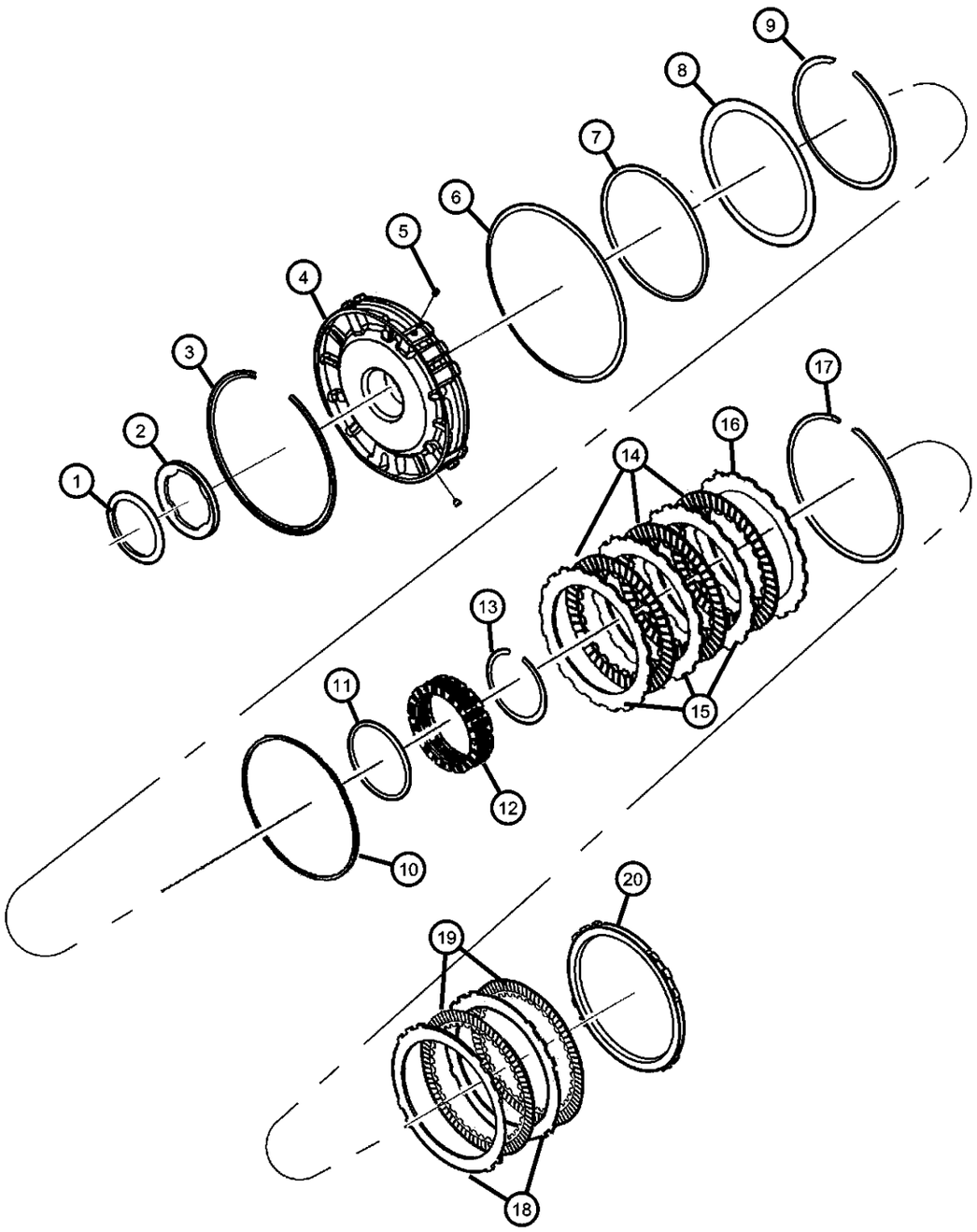

ITEM	PART NUMBER	QTY	LINE	SERIES	BODY	ENGINE	TRANS	TRIM	DESCRIPTION
	04799528AB	1	T				DGQ		
		1	J				DGQ		
14		1							DISC, Clutch, PKG 05013087AA, (NOT SERVICED)
15		1							PLATE, Clutch Separator, PKG 05013087AA, (NOT SERVICED)
16									PLATE, Transmission Clutch Reaction
	04799533	1	T				DGQ		
		1	J				DGQ		
17		1							SNAP RING, Transmission, PKG 05013087AA, (NOT SERVICED)
18		1							PLATE, PKG 05013087AA, (NOT SERVICED)
19		1							DISC, Clutch, PKG 05013087AA, (NOT SERVICED)
20									PLATE, Transmission Clutch Reaction
	04799687AB	1	T				DGQ		
		1	J				DGQ		

GRAND CHEROKEE (WJ)

SERIES	LINE	BODY	ENGINE	TRANSMISSION
H = Laredo M = Sport P = Limited S = Overland	T = JEEP - 2WD J = JEEP - 4WD U = JEEP - 4WD (RHD)	74 = SPORT UTILITY 4-DR	ERH = Engine - 4.0L Power Tech I-6 EVA = Engine- 4.7L V8 MPI EVC = Engine - 4.7L HO V8 MPI ER0 = All 4.0L 6 Cyl. Gas EV0 = All 4.7L Gas	DGK = 4 Speed Auto, 42RE DGQ = 5 Speed Auto, 45RFE DG0 = All Automatic Transmissions

Input/Reverse Planetary [45RFE] DGQ]
Figure 45RFE-450

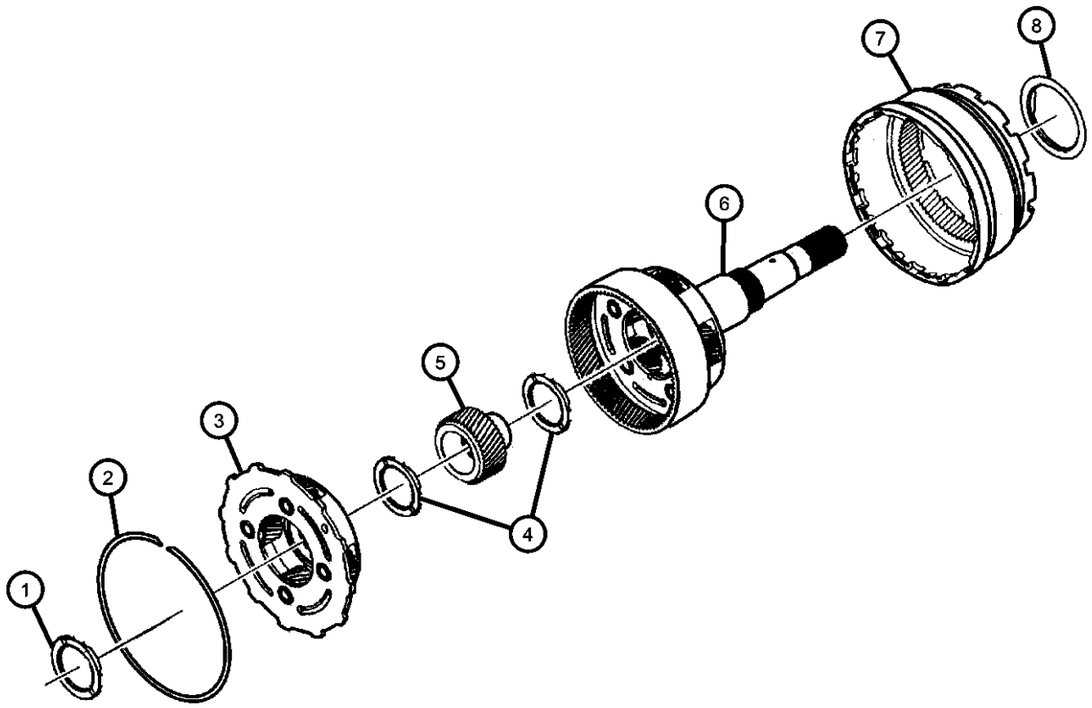

ITEM	PART NUMBER	QTY	LINE	SERIES	BODY	ENGINE	TRANS	TRIM	DESCRIPTION
NOTES:									
DG4= 45RFE Multi Speed Automatic Transmission									
1									THRUST BEARING, Needle Roller
	04799469	1	T				DGQ		
		1	J				DGQ		
2									SNAP RING
	04799247	1	T				DGQ		
		1	J				DGQ		
3									REVERSE CARRIER KIT
	05134382AA	1	T				DGQ		
		1	J				DGQ		
4									THRUST BEARING, Needle Roller
	04799469	1	T				DGQ		
		1	J				DGQ		
5									GEAR, Input Sun
	04799586	1	T				DGQ		
		1	J				DGQ		
6									INPUT CARRIER KIT
	05135165AA	1	T				DGQ		
		1	J				DGQ		
7									GEAR, Annulus
	04799501	1	T				DGQ		
		1	J				DGQ		
8									THRUST BEARING, Needle Roller
	04799459	1	T				DGQ		
		1	J				DGQ		
-9									CARRIER, Reverse Complete
	04799503	1	T				DGQ		
		1	J				DGQ		

GRAND CHEROKEE (WJ)

SERIES	LINE	BODY	ENGINE	TRANSMISSION
H = Laredo M = Sport P = Limited S = Overland	T = JEEP - 2WD J = JEEP - 4WD U = JEEP - 4WD (RHD)	74 = SPORT UTILITY 4-DR	ERH = Engine - 4.0L Power Tech I-6 EVA = Engine- 4.7L V8 MPI EVC = Engine - 4.7L HO V8 MPI ER0 = All 4.0L 6 Cyl. Gas EV0 = All 4.7L Gas	DGK = 4 Speed Auto, 42RE DGQ = 5 Speed Auto, 45RFE DG0 = All Automatic Transmissions

Reaction Annulus/Sun Gear [45RFE] [DGQ]
Figure 45RFE-460

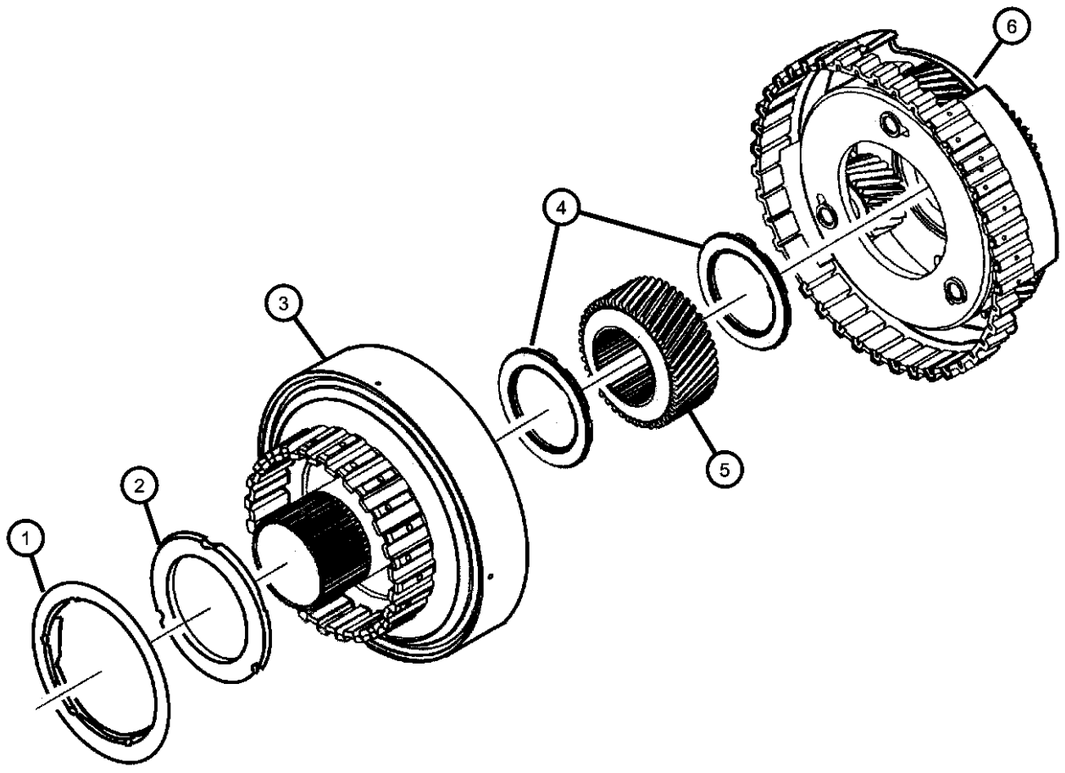

ITEM	PART NUMBER	QTY	LINE	SERIES	BODY	ENGINE	TRANS	TRIM	DESCRIPTION
NOTE; Sales Codes									
[DGQ] = 5 Speed Automatic Transmission [45RFE]									
1									THRUST BEARING, Needle Roller
	04799459	1	J				DGQ		
		1	T				DGQ		
2		1							THRUST WASHER, Planetary Carrier, PKG 05013092AA, (NOT SERVICED)
3									GEAR, Annulus
	04799604	1	T				DGQ		
		1	J				DGQ		
4									THRUST BEARING, Needle Roller
	04799469	1	T				DGQ		
		1	J				DGQ		
5									GEAR, Reaction Sun
	04799602	1	T				DGQ		
		1	J				DGQ		
6									CARRIER, Reaction Complete
	04799619	1	T				DGQ		
		1	J				DGQ		

GRAND CHEROKEE (WJ)

SERIES	LINE	BODY	ENGINE	TRANSMISSION
H = Laredo	T = JEEP - 2WD	74 = SPORT UTILITY 4-DR	ERH = Engine - 4.0L Power Tech I-6	DGK = 4 Speed Auto, 42RE
M = Sport	J = JEEP - 4WD		EVA = Engine- 4.7L V8 MPI	DGQ = 5 Speed Auto, 45RFE
P = Limited	U = JEEP - 4WD (RHD)		EVC = Engine - 4.7L HO V8 MPI	DG0 = All Automatic Transmissions
S = Overland			ER0 = All 4.0L 6 Cyl. Gas	
			EV0 = All 4.7L Gas	

Low / Reverse Clutch
Figure 45RFE-470

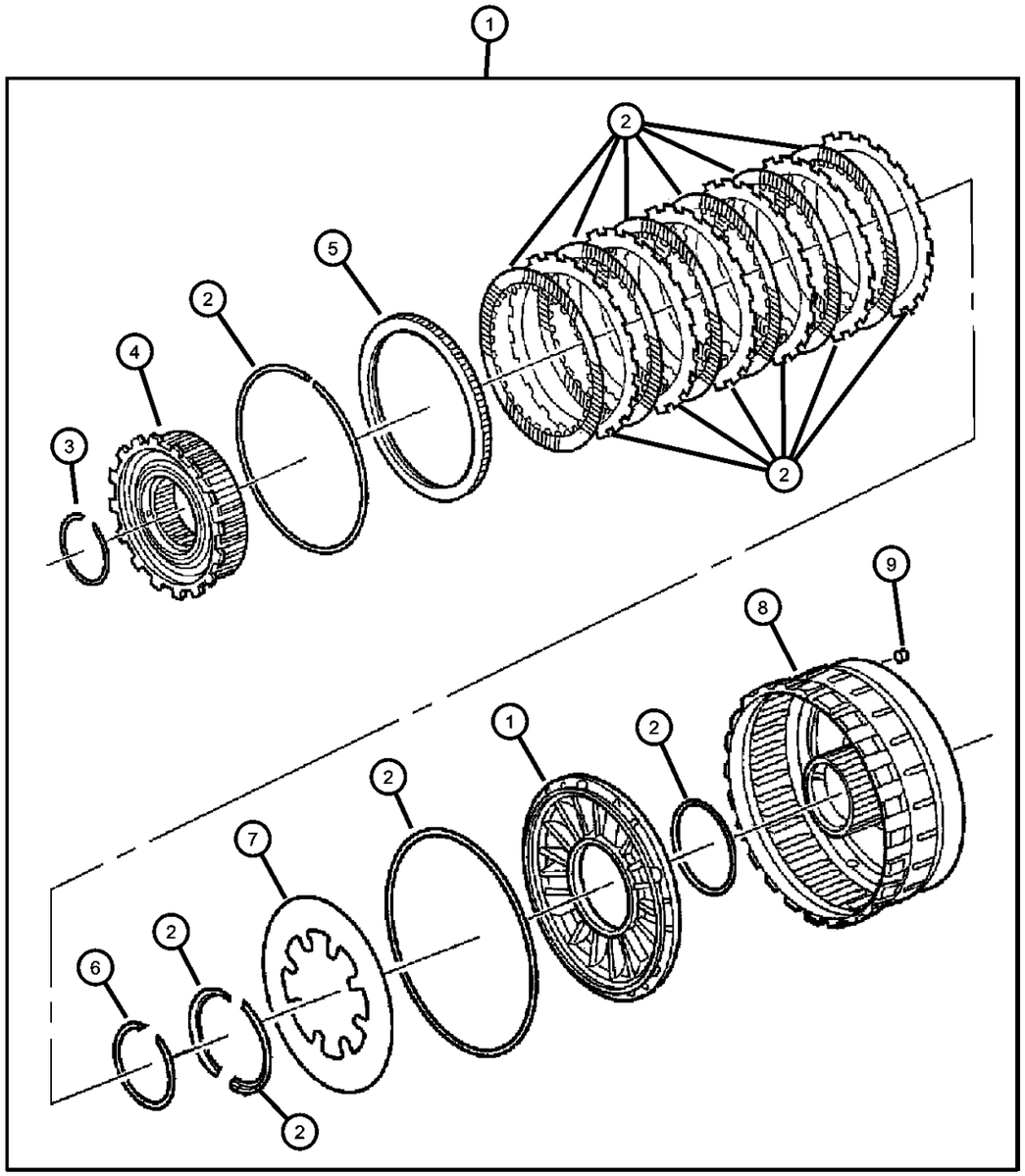

ITEM	PART NUMBER	QTY	LINE	SERIES	BODY	ENGINE	TRANS	TRIM	DESCRIPTION
1									CLUTCH, L/R Clutch
	04799457AB	1	T				DGQ		
		1	J				DGQ		
2									CLUTCH PACKAGE, Automatic Transmission, Low/Reverse
	05013091AA	1	T				DGQ		
		1	J				DGQ		
3									SNAP RING
	04799863AA	1	T				DGQ		
		1	J				DGQ		
4									CLUTCH, Overrunning
	04799465	1	T				DGQ		
		1	J				DGQ		
5									PLATE, Transmission Clutch Reaction
	04799667	1	T				DGQ		
		1	J				DGQ		
6									SNAP RING
	04799863AA	1	T				DGQ		
		1	J				DGQ		
7									SPRING, Low/Reverse Clutch Piston
	04799640	1	T				DGQ		
		1	J				DGQ		
8									RETAINER, Clutch
	04799635	1	T				DGQ		
		1	J				DGQ		
9									BLEED ORIFICE, Transmission
	04799086	1	T				DGQ		
		1	J				DGQ		

GRAND CHEROKEE (WJ)

SERIES	LINE	BODY	ENGINE	TRANSMISSION
H = Laredo M = Sport P = Limited S = Overland	T = JEEP - 2WD J = JEEP - 4WD U = JEEP - 4WD (RHD)	74 = SPORT UTILITY 4-DR	ERH = Engine - 4.0L Power Tech I-6 EVA = Engine- 4.7L V8 MPI EVC = Engine - 4.7L HO V8 MPI ER0 = All 4.0L 6 Cyl. Gas EV0 = All 4.7L Gas	DGK = 4 Speed Auto, 42RE DGQ = 5 Speed Auto, 45RFE DG0 = All Automatic Transmissions

Valve Body [45RFE] [DGQ]
Figure 45RFE-710

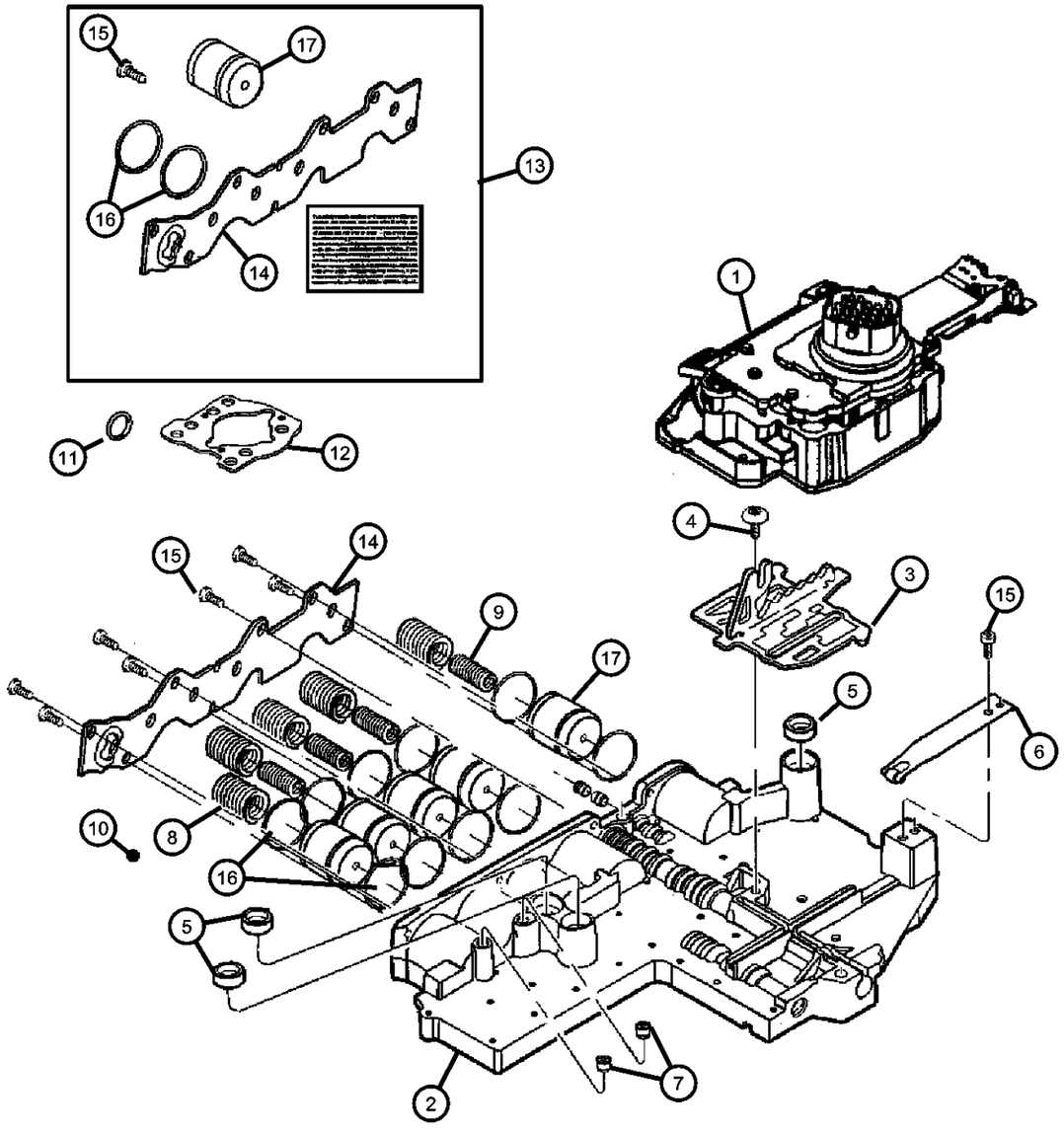

ITEM	PART NUMBER	QTY	LINE	SERIES	BODY	ENGINE	TRANS	TRIM	DESCRIPTION
NOTE; Sales Codes [DGQ] = 5 Speed Automatic Transmission [45RFE]									
1									SOLENOID, Transmission
	04799934AD	1	T				DGQ		
		1	J				DGQ		
2									VALVE BODY, Transfer Plate and Valve
	04799588	1	T				DGQ		
		1	J				DGQ		
3									PLATE, Manual Valve Cam
	04799654	1	T				DGQ		
		1	J				DGQ		
4									SCREW, Shoulder/Truss, M5x.8x12.5
	06501710	1	T				DGQ		
		1	J				DGQ		
5									SEAL, Clutch Feed
	04799778	3	T				DGQ		
		3	J				DGQ		
6									DETENT, Valve Body
	04799593	1	T				DGQ		
		1	J				DGQ		
7									BLEED ORIFICE, Transmission
	04799086	2	T				DGQ		
		2	J				DGQ		
8									SPRING, Accumulator
	04471880	5	T				DGQ		
		5	J				DGQ		
9									SPRING, Accumulator
	04567575	4	T				DGQ		
		4	J				DGQ		
10									BALL, Check
	04446602	7	J				DGQ		
		7	T				DGQ		
11									O RING, Control Valve

GRAND CHEROKEE (WJ)

SERIES	LINE	BODY	ENGINE	TRANSMISSION
H = Laredo M = Sport P = Limited S = Overland	T = JEEP - 2WD J = JEEP - 4WD U = JEEP - 4WD (RHD)	74 = SPORT UTILITY 4-DR	ERH = Engine - 4.0L Power Tech I-6 EVA = Engine- 4.7L V8 MPI EVC = Engine - 4.7L HO V8 MPI ER0 = All 4.0L 6 Cyl. Gas EV0 = All 4.7L Gas	DGK = 4 Speed Auto, 42RE DGQ = 5 Speed Auto, 45RFE DG0 = All Automatic Transmissions

Valve Body [45RFE] [DGQ]
Figure 45RFE-710

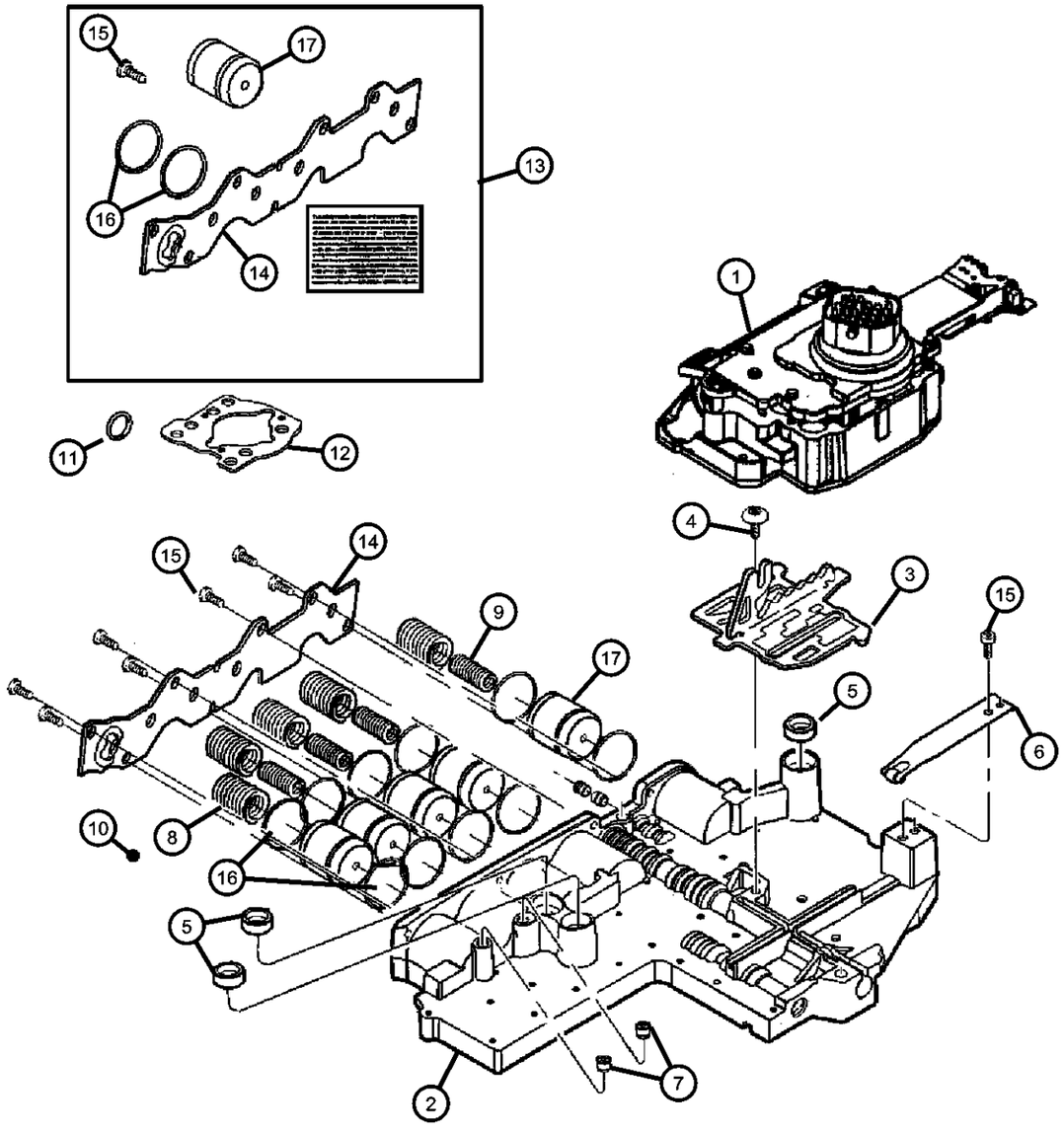

ITEM	PART NUMBER	QTY	LINE	SERIES	BODY	ENGINE	TRANS	TRIM	DESCRIPTION
	06505335AA	1	T				DGQ		
		1	J				DGQ		
12									SEAL, Insulator
	04799986AA	1	T				DGQ		
		1	J				DGQ		
13									ACCUMULATOR KIT, Accumulator Cover
	05174633AA	1	T				DGQ		
		1	J				DGQ		
14									COVER, Accumulator
	04799598AB	1	T				DGQ		
		1	J				DGQ		
15									SCREW, Pan Head, M5 x 0.8 x 12.60
	06503232	7	T				DGQ		
		7	J				DGQ		
16									SEAL, Accumulator
	04446544	10	T				DGQ		
		10	J				DGQ		
17									PISTON, 2nd and 4th Accumulator
	04446620	5	T				DGQ		
		5	J				DGQ		

GRAND CHEROKEE (WJ)

SERIES	LINE	BODY	ENGINE	TRANSMISSION
H = Laredo	T = JEEP - 2WD	74 = SPORT UTILITY 4-DR	ERH = Engine - 4.0L Power Tech I-6	DGK = 4 Speed Auto, 42RE
M = Sport	J = JEEP - 4WD		EVA = Engine- 4.7L V8 MPI	DGQ = 5 Speed Auto, 45RFE
P = Limited	U = JEEP - 4WD (RHD)		EVC = Engine - 4.7L HO V8 MPI	DG0 = All Automatic Transmissions
S = Overland			ER0 = All 4.0L 6 Cyl. Gas	
			EV0 = All 4.7L Gas	

Parking Sprag [45RFE] [DGQ]
Figure 45RFE-730

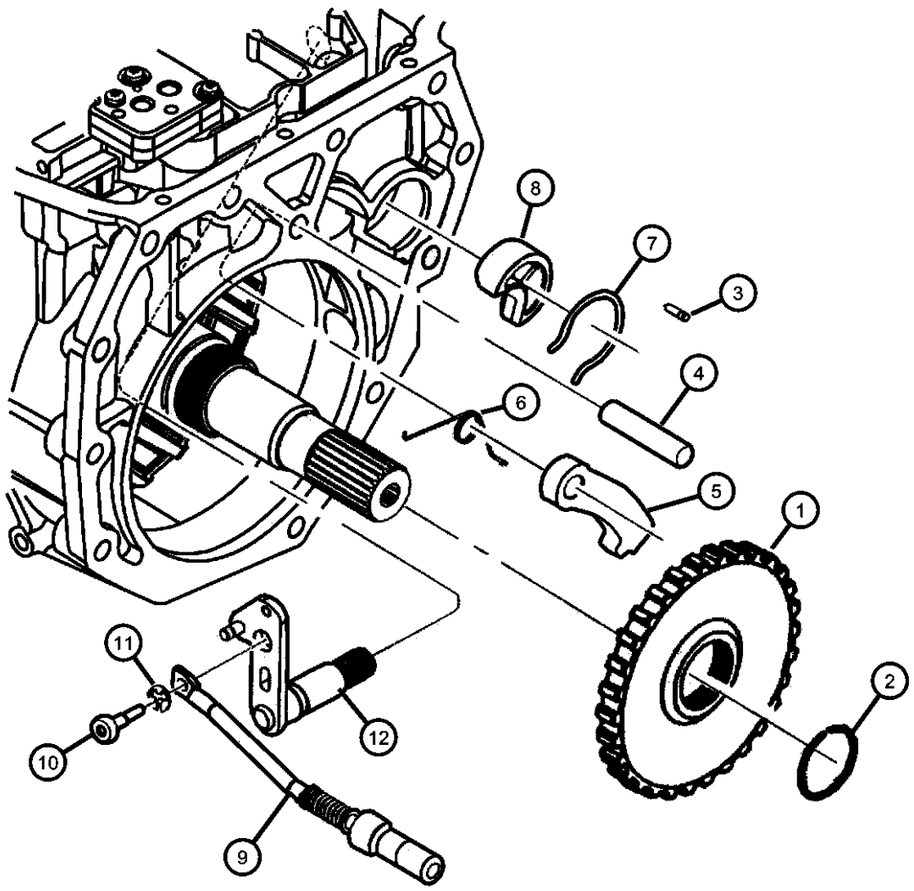

ITEM	PART NUMBER	QTY	LINE	SERIES	BODY	ENGINE	TRANS	TRIM	DESCRIPTION
NOTE; Sales Codes									
[DGQ] = 5 Speed Automatic Transmission [45RFE]									
1									SPRAG, Transmission Parking
	04799493	1	T				DGQ		
		1	J				DGQ		
2									SNAP RING, Transmission
	04799704	1	T				DGQ		
		1	J				DGQ		
3									PIN
	00456636	1	T				DGQ		
		1	J				DGQ		
4									SHAFT, Parking Pawl
	04799450	1	T				DGQ		
		1	J				DGQ		
5									PAWL, Parking Sprag
	04799744AC	1	T				DGQ		
		1	J				DGQ		
6									SPRING, Torsion
	04799451	1	T				DGQ		
		1	J				DGQ		
7									SNAP RING
	04799313	1	T				DGQ		
		1	J				DGQ		
8									GUIDE, Parking Sprag Pawl
	04799774	1	T				DGQ		
		1	J				DGQ		
9									ROD, Parking Sprag
	04799611	1	T				DGQ		
		1	J				DGQ		
10									SCREW, M6x1x30
	06504548	1	T				DGQ		
		1	J				DGQ		
11									SNAP RING, Rod
	06035256	1	T				DGQ		

GRAND CHEROKEE (WJ)

SERIES	LINE	BODY	ENGINE	TRANSMISSION
H = Laredo M = Sport P = Limited S = Overland	T = JEEP - 2WD J = JEEP - 4WD U = JEEP - 4WD (RHD)	74 = SPORT UTILITY 4-DR	ERH = Engine - 4.0L Power Tech I-6 EVA = Engine- 4.7L V8 MPI EVC = Engine - 4.7L HO V8 MPI ER0 = All 4.0L 6 Cyl. Gas EV0 = All 4.7L Gas	DGK = 4 Speed Auto, 42RE DGQ = 5 Speed Auto, 45RFE DG0 = All Automatic Transmissions

Parking Sprag [45RFE] [DGQ]
Figure 45RFE-730

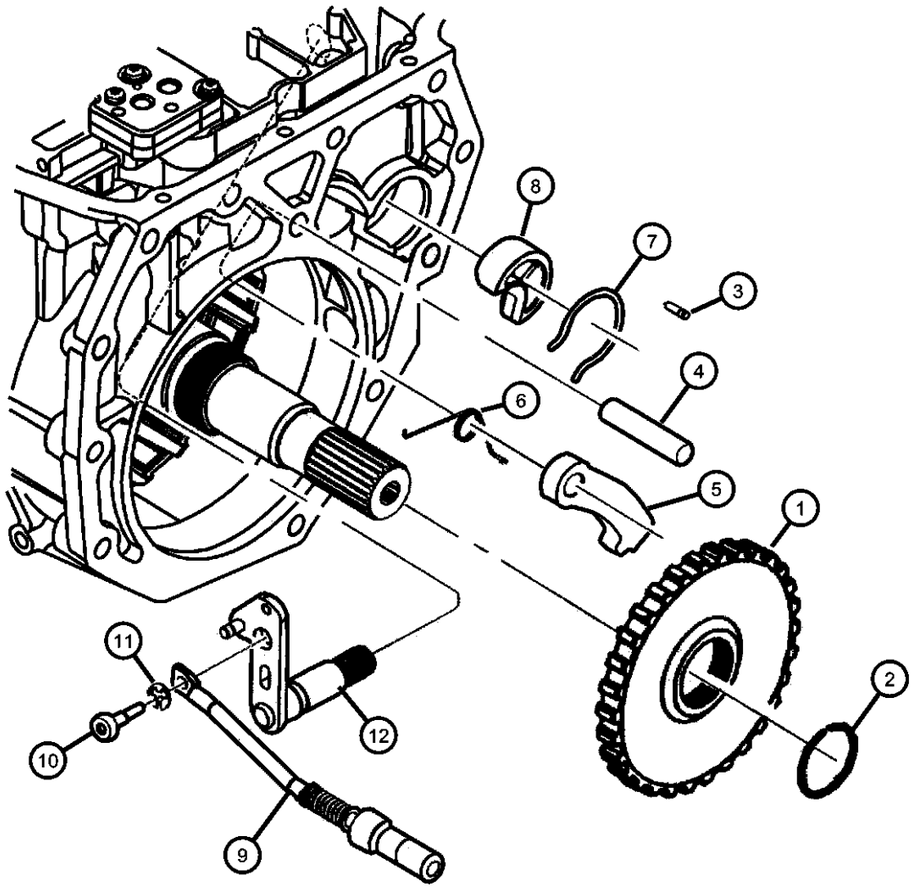

ITEM	PART NUMBER	QTY	LINE	SERIES	BODY	ENGINE	TRANS	TRIM	DESCRIPTION
		1	J				DGQ		
12									LEVER, Shift Shaft
	04799453	1	T				DGQ		
		1	J				DGQ		

GRAND CHEROKEE (WJ)

SERIES	LINE	BODY	ENGINE	TRANSMISSION
H = Laredo M = Sport P = Limited S = Overland	T = JEEP - 2WD J = JEEP - 4WD U = JEEP - 4WD (RHD)	74 = SPORT UTILITY 4-DR	ERH = Engine - 4.0L Power Tech I-6 EVA = Engine- 4.7L V8 MPI EVC = Engine - 4.7L HO V8 MPI ER0 = All 4.0L 6 Cyl. Gas EV0 = All 4.7L Gas	DGK = 4 Speed Auto, 42RE DGQ = 5 Speed Auto, 45RFE DG0 = All Automatic Transmissions

Gearshift Controls [45RFE] [DGQ]
Figure 45RFE-1210

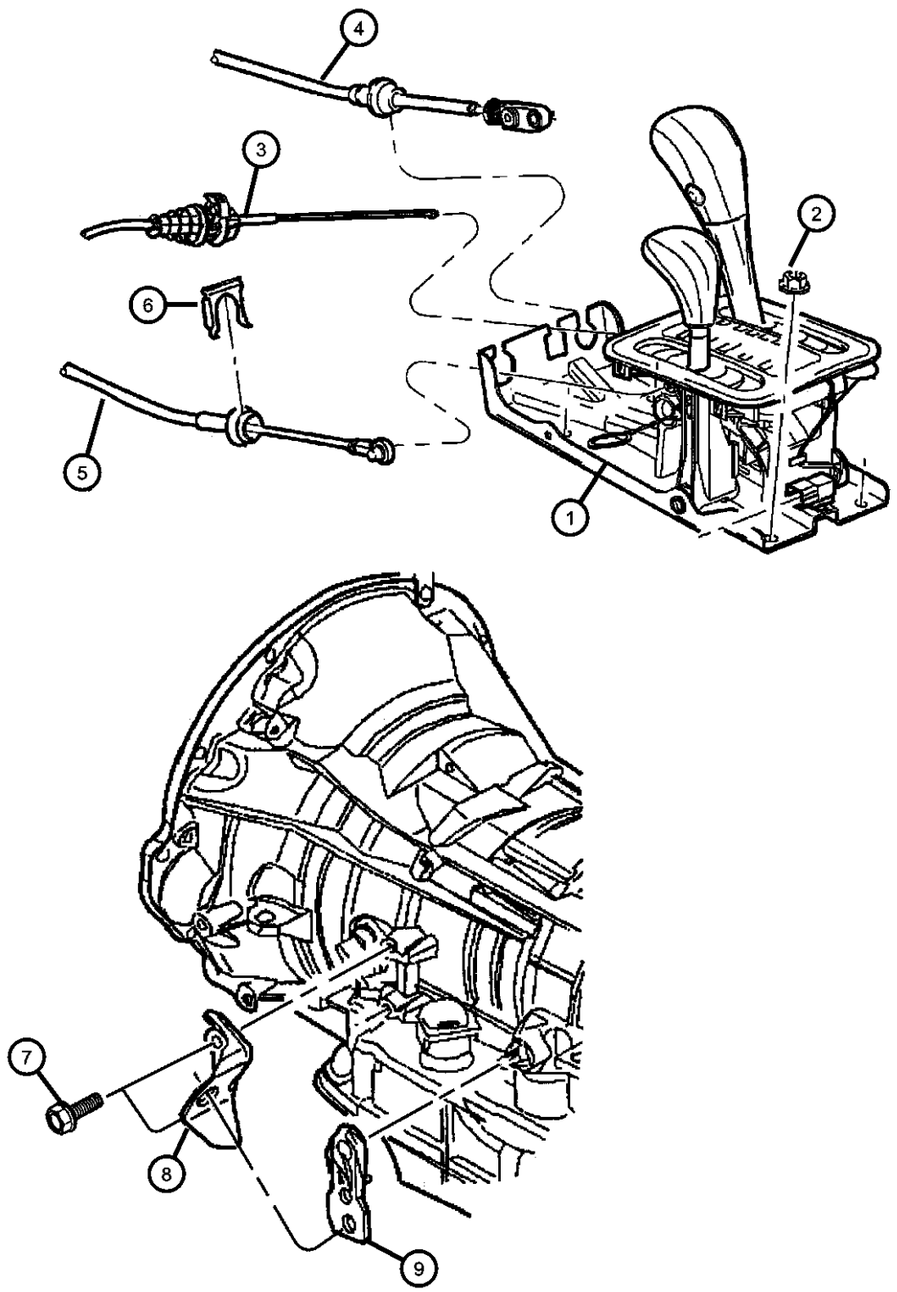

ITEM	PART NUMBER	QTY	LINE	SERIES	BODY	ENGINE	TRANS	TRIM	DESCRIPTION
NOTES: Sales Codes [DGK] = 42RE 4 Speed Automatic Transmissions [DGQ] = 45RFE 5 Speed Automatic Transmissions [ER0] = All 4.0L Gas Engines [EV0] = All 4.7L Gas Engines [EVA] = Next Generation 4.7L Power Tech. [EVC] = 4..7L Power Tech Ho									
1									HOUSING AND LEVER, Shifter
	52104464AB	1	J	P, S		ER0, EV0	DGK, DGQ		With [DHP]
	52109670AB	1	T			ER0, EVA, EVC	DGK, DGQ		
	52109671AA	1	J	H		ER0, EV0	DGK, DGQ		
	52109672AB	1	J			ER0, EV0	DGK, DGQ		With [DHF] Without [DSB]
		1	J			ER0, EV0	DGK, DGQ		With [DHQ] Without [DSB]
	52109673AB	1	J			ER0, EV0, EVC	DGK, DGQ		With [DHF] And [DSB]
		1	J			ER0, EV0, EVC	DGK, DGQ		With [DHQ] And [DSB]
2	06101695	4							NUT, Hex Flange Lock, M8x1.25
3	52109606AA	1					DG0		CABLE, Park Interlock
4	52104060AC	1					DG0		CABLE, Gearshift Control
5	52104218AB	1	J				DG0		CABLE, Gearshift Control
6	04269830	2	J						CLIP, Cable
7	06101758	2					DGQ		SCREW, Hex Head, M8x1.25x20
8	52104371AB	1					DGQ		BRACKET, Shift Cable
9	52104177	1					DGQ		LEVER, Manual Control

GRAND CHEROKEE (WJ)

SERIES	LINE	BODY	ENGINE	TRANSMISSION
H = Laredo M = Sport P = Limited S = Overland	T = JEEP - 2WD J = JEEP - 4WD U = JEEP - 4WD (RHD)	74 = SPORT UTILITY 4-DR	ERH = Engine - 4.0L Power Tech I-6 EVA = Engine- 4.7L V8 MPI EVC = Engine - 4.7L HO V8 MPI ER0 = All 4.0L 6 Cyl. Gas EV0 = All 4.7L Gas	DGK = 4 Speed Auto, 42RE DGQ = 5 Speed Auto, 45RFE DG0 = All Automatic Transmissions

LR CLUTCH PACKAGE 05013091aa

	D-ring, external (L/R piston outer)
	D-ring, internal (L/R piston inner)
(6)	Plate, clutch separator (1.74mm thk)
(6)	Disc assy, clutch (L/R)
	Snap ring, flat (1.5/1.6 thk)
	Snap ring, flat (2.03/2.13 thk)
	Snap ring, flat (2.54/2.68 thk)
(2)	Retainer, c-clip

ITEM	PART NUMBER	QTY	LINE	SERIES	BODY	ENGINE	TRANS	TRIM	DESCRIPTION
1									CLUTCH PACKAGE, Automatic Transmission, Low/Reverse
	05013091AA	1	T				DGQ		
		1	J				DGQ		

GRAND CHEROKEE (WJ)

SERIES	LINE	BODY	ENGINE	TRANSMISSION
H = Laredo M = Sport P = Limited S = Overland	T = JEEP - 2WD J = JEEP - 4WD U = JEEP - 4WD (RHD)	74 = SPORT UTILITY 4-DR	ERH = Engine - 4.0L Power Tech I-6 EVA = Engine- 4.7L V8 MPI EVC = Engine - 4.7L HO V8 MPI ER0 = All 4.0L 6 Cyl. Gas EV0 = All 4.7L Gas	DGK = 4 Speed Auto, 42RE DGQ = 5 Speed Auto, 45RFE DG0 = All Automatic Transmissions

SELECTIVE THRUST PLATES **05013093aa**

INPUT CLUTCH THRUST PLATE PKG (1)

	Thrust plate, input clutc 1.52 / 1.61
	Thrust plate, input clutc 1.66 / 1.75
	Thrust plate, input clutc 1.80 / 1.89
	Thrust plate, input clutc 1.94 / 2.03
	Thrust plate, input clutc 2.08 / 2.17
	Thrust plate, input clutc 2.22 / 2.31
	Thrust plate, input clutc 2.36 / 2.45
	Thrust plate, input clutc 2.50 / 2.59
	Thrust plate, input clutc 2.64 / 2.73
	Thrust plate, input clutc 2.78 / 2.87
	Thrust plate, input clutc 2.92 / 3.01
	Thrust plate, input clutc 3.06 / 3.15
	Thrust plate, input clutc 3.20 / 3.29
	Thrust plate, input clutc 3.34 / 3.43
	Thrust plate, input clutc 3.62 / 3.71

ITEM	PART NUMBER	QTY	LINE	SERIES	BODY	ENGINE	TRANS	TRIM	DESCRIPTION
NOTE; Sales Codes [DGQ] = 5 Speed Automatic Transmission [45RFE]									
1									PLATE PACKAGE, Input Clutch Thrust
	05013093AA	1	T				DGQ		
		1	J				DGQ		

GRAND CHEROKEE (WJ)

SERIES	LINE	BODY	ENGINE	TRANSMISSION
H = Laredo M = Sport P = Limited S = Overland	T = JEEP - 2WD J = JEEP - 4WD U = JEEP - 4WD (RHD)	74 = SPORT UTILITY 4-DR	ERH = Engine - 4.0L Power Tech I-6 EVA = Engine- 4.7L V8 MPI EVC = Engine - 4.7L HO V8 MPI ER0 = All 4.0L 6 Cyl. Gas EV0 = All 4.7L Gas	DGK = 4 Speed Auto, 42RE DGQ = 5 Speed Auto, 45RFE DG0 = All Automatic Transmissions

ITEM	PART NUMBER	QTY	LINE	SERIES	BODY	ENGINE	TRANS	TRIM	DESCRIPTION
NOTE; Sales Codes									
[DGQ] = 5 Speed Automatic Transmission [45RFE]									
1									OVERHAUL PACKAGE, Transmission
	05014221AG	1	T				DGQ		
		1	J				DGQ		

O/H seal/gasket package 05014221ac (1)

	2&4 clutch package
	Input clutch package
	L/R clutch package
	Sump filter & seal package
	Cooler filter
	fill tube seal
	Frt pmp cover o-ring/seal assy
	Rotating shaft seal,pmp hsg
	Adapter seal, 4x4
	Extension seal,4x2
	Manual lever seal
(2)	Speed sensor seal
	Reaction supt ring seal
	Rev O/D clutch filter
(10)	Accumulator ring seal
(3)	Valve body seal
	Check valve o-ring
	Solenoid insulator seal
	T/C seal

GRAND CHEROKEE (WJ)

SERIES	LINE	BODY	ENGINE	TRANSMISSION
H = Laredo M = Sport P = Limited S = Overland	T = JEEP - 2WD J = JEEP - 4WD U = JEEP - 4WD (RHD)	74 = SPORT UTILITY 4-DR	ERH = Engine - 4.0L Power Tech I-6 EVA = Engine- 4.7L V8 MPI EVC = Engine - 4.7L HO V8 MPI ER0 = All 4.0L 6 Cyl. Gas EV0 = All 4.7L Gas	DGK = 4 Speed Auto, 42RE DGQ = 5 Speed Auto, 45RFE DG0 = All Automatic Transmissions

INPUT CLUTCH PACKAGE 05013090aa

	O-ring, large (2.62mm x 79.84 ID,gm)
	O-ring, small (2.62mm x 70.56 ID,red)
(2)	Seal, internal lip
(2)	Ring seal, I-shaft
	O-ring, piston inner (2.62mm x 93.54 ID)
(5)	Plate, clutch separator (1.74mm thk)
(4)	Disc assy, clutch (u/d clutch)
(4)	Disc assy, clutch (o/d clutch)
(3)	PLate, clutch separator (2.21mm thk, O/D)
(2)	Disc assy, clutch (rev clutch)
	Snap ring,tapered, internal butterfly end
	Snap ring, flat (1.5/1.6 thk)
	Snap ring, flat (1.80/1.90 thk)
	Snap ring, flat (2.15/2.25 thk)
	Piston & seal, underdrive
	Piston & seal, underdrive balance

ITEM	PART NUMBER	QTY	LINE	SERIES	BODY	ENGINE	TRANS	TRIM	DESCRIPTION
NOTE; Sales Codes [DGQ] = 5 Speed Automatic Transmission [45RFE]									
1									CLUTCH PACKAGE, Automatic Transmission, Input
	05013090AB	1	T				DGQ		
		1	J				DGQ		

GRAND CHEROKEE (WJ)

SERIES	LINE	BODY	ENGINE	TRANSMISSION
H = Laredo M = Sport P = Limited S = Overland	T = JEEP - 2WD J = JEEP - 4WD U = JEEP - 4WD (RHD)	74 = SPORT UTILITY 4-DR	ERH = Engine - 4.0L Power Tech I-6 EVA = Engine- 4.7L V8 MPI EVC = Engine - 4.7L HO V8 MPI ER0 = All 4.0L 6 Cyl. Gas EV0 = All 4.7L Gas	DGK = 4 Speed Auto, 42RE DGQ = 5 Speed Auto, 45RFE DG0 = All Automatic Transmissions

SELECTIVE THRUST PLATES

PLANETARY THRUST PLATE PKG 05013092aa

	Thrust plate, planetary	1.62 / 1.75
	Thrust plate, planetary	1.81 / 1.94
	Thrust plate, planetary	1.96 / 2.09
	Thrust plate, planetary	2.11 / 2.24
	Thrust plate, planetary	2.26 / 2.39
	Thrust plate, planetary	2.41 / 2.54
	Thrust plate, planetary	2.56 / 2.69
	Thrust plate, planetary	2.71 / 2.84
	Thrust plate, planetary	2.86 / 2.99
	Thrust plate, planetary	3.01 / 3.14
	Thrust plate, planetary	3.16 / 3.29
	Thrust plate, planetary	3.31 / 3.44
	Thrust plate, planetary	3.46 / 3.59
	Thrust plate, planetary	3.61 / 3.74
	Thrust plate, planetary	3.76 / 3.89
	Thrust plate, planetary	3.91 / 4.04
	Thrust plate, planetary	4.06 / 4.19
	Thrust plate, planetary	4.21 / 4.34
	Thrust plate, planetary	4.36 / 4.49

ITEM	PART NUMBER	QTY	LINE	SERIES	BODY	ENGINE	TRANS	TRIM	DESCRIPTION
NOTE; Sales Codes [DGQ] = 5 Speed Automatic Transmission [45RFE]									
1									PLATE PACKAGE, Planetary Thrust
	05013092AA	1	T				DGQ		
		1	J				DGQ		

GRAND CHEROKEE (WJ)

SERIES	LINE	BODY	ENGINE	TRANSMISSION
H = Laredo M = Sport P = Limited S = Overland	T = JEEP - 2WD J = JEEP - 4WD U = JEEP - 4WD (RHD)	74 = SPORT UTILITY 4-DR	ERH = Engine - 4.0L Power Tech I-6 EVA = Engine- 4.7L V8 MPI EVC = Engine - 4.7L HO V8 MPI ER0 = All 4.0L 6 Cyl. Gas EV0 = All 4.7L Gas	DGK = 4 Speed Auto, 42RE DGQ = 5 Speed Auto, 45RFE DG0 = All Automatic Transmissions

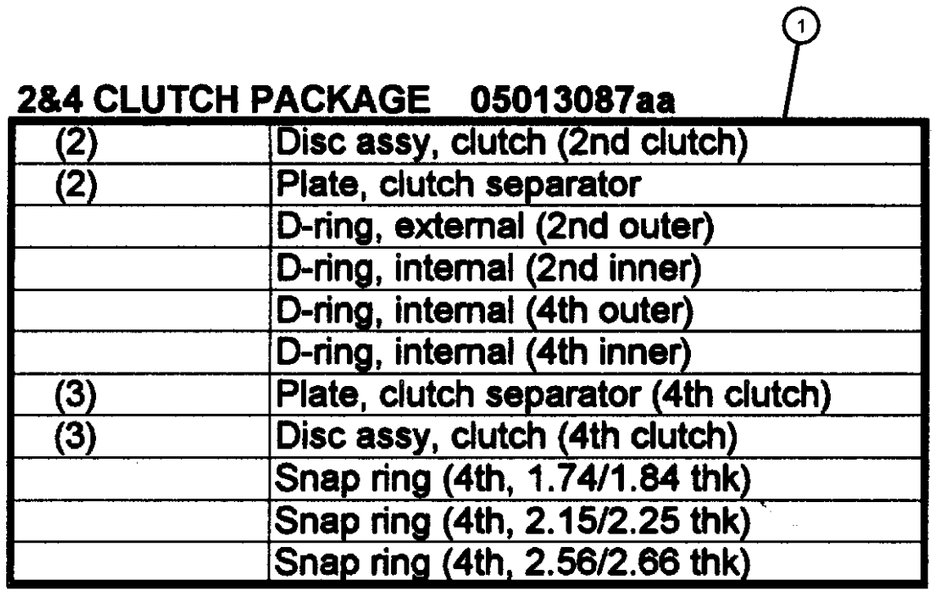

ITEM	PART NUMBER	QTY	LINE	SERIES	BODY	ENGINE	TRANS	TRIM	DESCRIPTION
NOTE; Sales Codes [DGQ] = 5 Speed Automatic Transmission [45RFE]									
1									CLUTCH PACKAGE, Automatic Transmission, 2/4
	05013087AB	1	T				DGQ		
		1	J				DGQ		

GRAND CHEROKEE (WJ)

SERIES	LINE	BODY	ENGINE	TRANSMISSION
H = Laredo M = Sport P = Limited S = Overland	T = JEEP - 2WD J = JEEP - 4WD U = JEEP - 4WD (RHD)	74 = SPORT UTILITY 4-DR	ERH = Engine - 4.0L Power Tech I-6 EVA = Engine- 4.7L V8 MPI EVC = Engine - 4.7L HO V8 MPI ER0 = All 4.0L 6 Cyl. Gas EV0 = All 4.7L Gas	DGK = 4 Speed Auto, 42RE DGQ = 5 Speed Auto, 45RFE DG0 = All Automatic Transmissions

Group - 242

Transfer Case Model 242 [DHC, DHP]

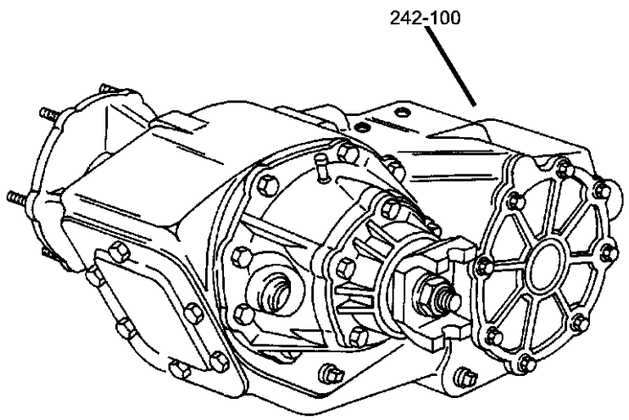

242-100 Transfer Case Assembly 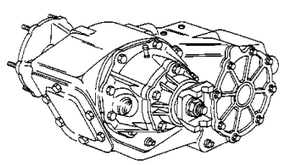	**242-1200** Gearshift Controls 	**242-200** Case and Related Parts 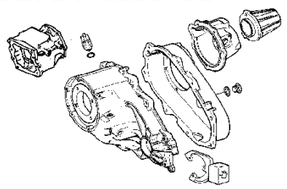	**242-400** Gear Train 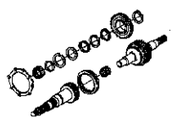
242-900 Fork and Rails 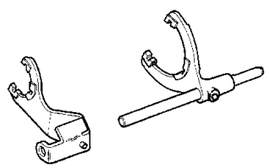			

Group - 242 Transfer Case Model 242 [DHC, DHP]

Illustration Title — Group-Fig. No.

Transfer Case Assembly
Transfer Case Select Trac [DHP] ..... Fig. 242 - 110

Case and Related Parts
Case and Related Parts Select Trac [DHP] ..... Fig. 242 - 210

Gear Train
Gear Train Select Trac [DHP] ..... Fig. 242 - 410

Fork and Rails
Fork and Rails Select Trac [DHP] ..... Fig. 242 - 910

Gearshift Controls
Gearshift Controls Select Trac [DHP] ..... Fig. 242 - 1210

Transfer Case Select Trac [DHP]
Figure 242-110

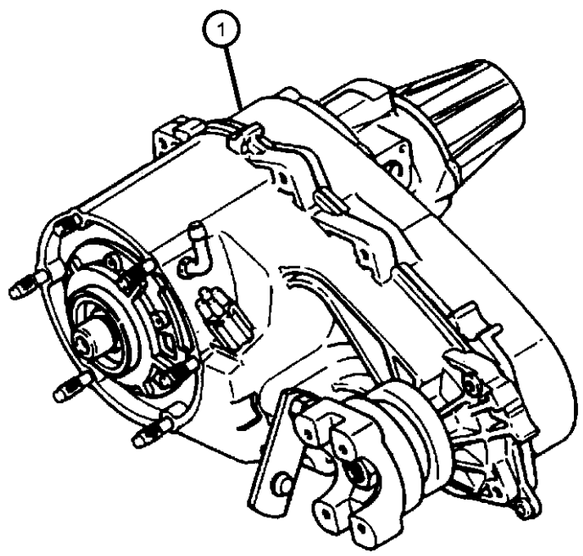

ITEM	PART NUMBER	QTY	LINE	SERIES	BODY	ENGINE	TRANS	TRIM	DESCRIPTION
NOTES: Sales Codes [ER0] = All 4.0L 6 Cylinder Gas Engines [EV0] = All 4.7L Gas Engines									
1									TRANSFER CASE, NP242
	52099361AD	1	J			ER0			
	52099362AD	1	J			EV0			

GRAND CHEROKEE (WJ)

SERIES	LINE	BODY	ENGINE	TRANSMISSION
H = Laredo M = Sport P = Limited S = Overland	T = JEEP - 2WD J = JEEP - 4WD U = JEEP - 4WD (RHD)	74 = SPORT UTILITY 4-DR	ERH = Engine - 4.0L Power Tech I-6 EVA = Engine- 4.7L V8 MPI EVC = Engine - 4.7L HO V8 MPI ER0 = All 4.0L 6 Cyl. Gas EV0 = All 4.7L Gas	DGK = 4 Speed Auto, 42RE DGQ = 5 Speed Auto, 45RFE DG0 = All Automatic Transmissions

Case and Related Parts Select Trac [DHP]
Figure 242-210

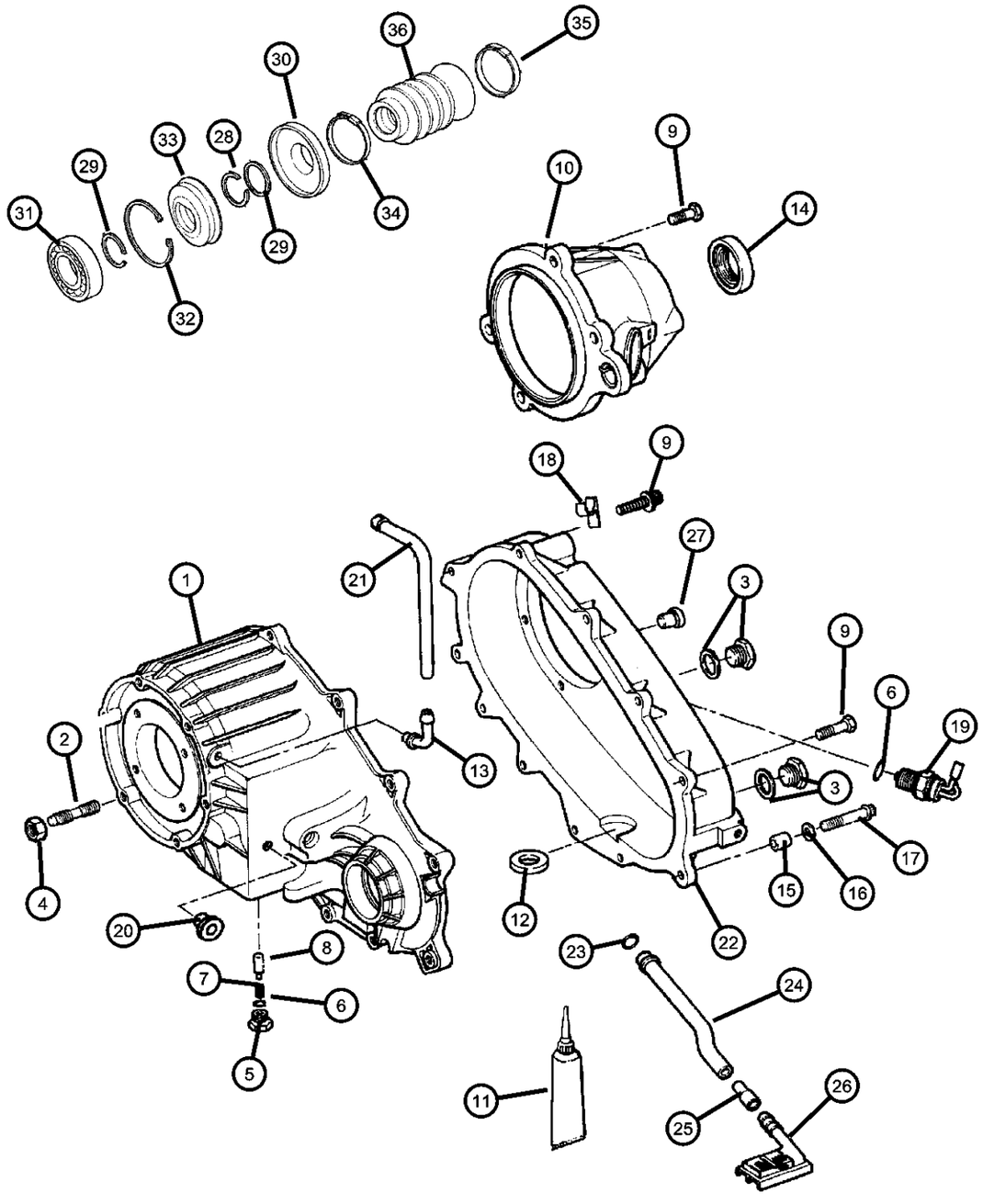

ITEM	PART NUMBER	QTY	LINE	SERIES	BODY	ENGINE	TRANS	TRIM	DESCRIPTION
NOTES: Sales Codes [ER0] = All 4.0L 6 Cylinder Gas Engines [EV0] = All 4.7L Gas Engines									
1									CASE, Transfer Front
	05014045AA	1	J			ER0			
		1	J			EV0			
2									STUD
	04505365	6	J			ER0			
	05012310AA	6	J			EV0			
3									PLUG, Oil Fill
	04856641	1	J			ER0			
		2	J			EV0			
4	06033172	6	J						NUT AND WASHER, Hex, .375-24
5									SCREW
	04886473AA	1	J			ER0			
		1	J			EV0			
6									SEAL, Vacuum Switch
	04338956	1	J			ER0			
		1	J			EV0			
7									SPRING, Poppet Plunger
	05003445AA	1	J			ER0			
		1	J			EV0			
8									PLUNGER
	05003444AA	1	J			ER0			
		1	J			EV0			
9									BOLT, Transfer Case
	04210617	6	J			ER0			
		4	J			ER0			
		8	J			EV0			
		4	J			EV0			
10									RETAINER, Transfer Case Rear
	05003456AA	1	J			EV0			
	05012347AA	1	J			ER0			
11									SEALANT, RTV

GRAND CHEROKEE (WJ)

SERIES	LINE	BODY	ENGINE	TRANSMISSION
H = Laredo M = Sport P = Limited S = Overland	T = JEEP - 2WD J = JEEP - 4WD U = JEEP - 4WD (RHD)	74 = SPORT UTILITY 4-DR	ERH = Engine - 4.0L Power Tech I-6 EVA = Engine- 4.7L V8 MPI EVC = Engine - 4.7L HO V8 MPI ER0 = All 4.0L 6 Cyl. Gas EV0 = All 4.7L Gas	DGK = 4 Speed Auto, 42RE DGQ = 5 Speed Auto, 45RFE DG0 = All Automatic Transmissions

Case and Related Parts Select Trac [DHP]
Figure 242-210

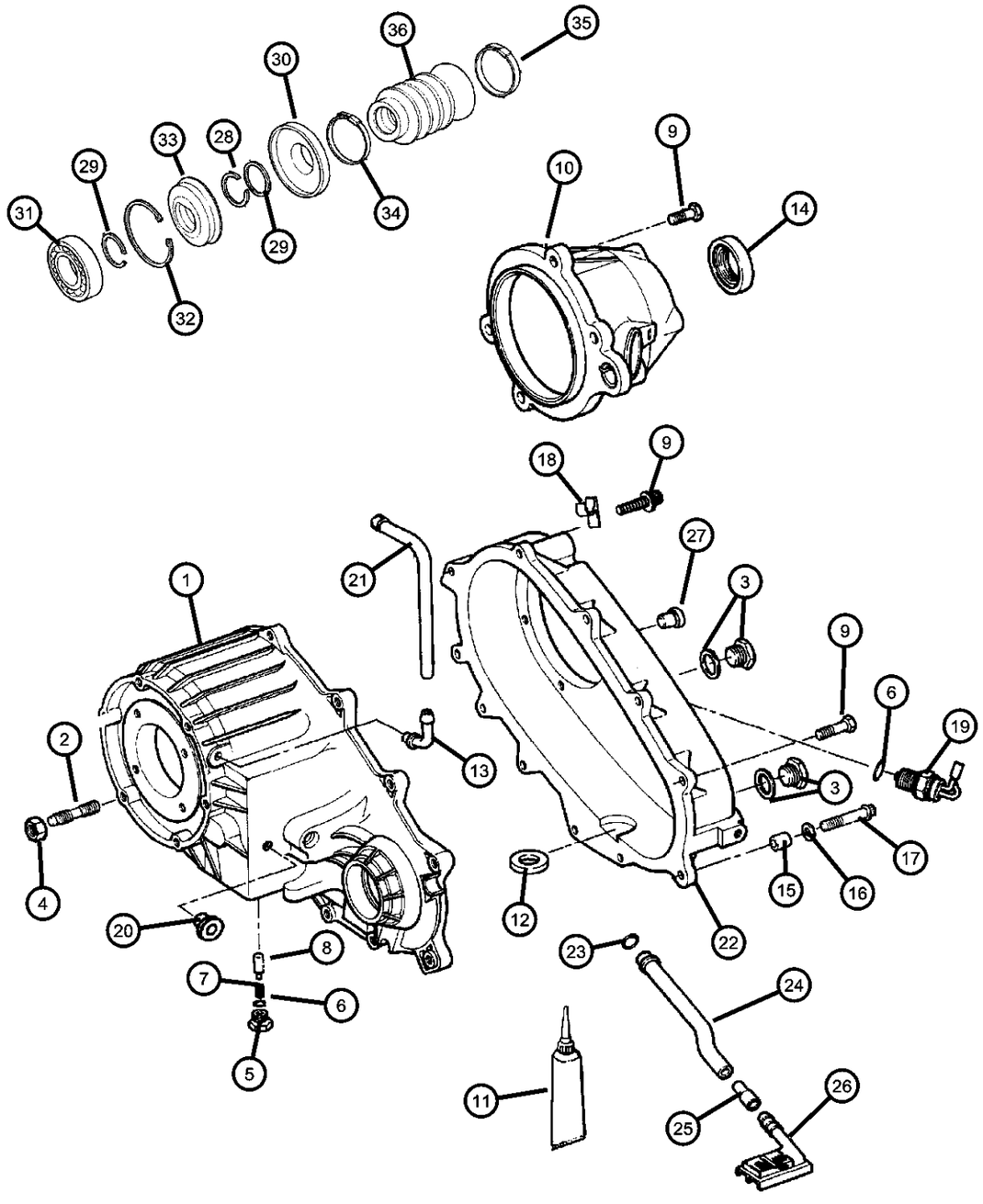

ITEM	PART NUMBER	QTY	LINE	SERIES	BODY	ENGINE	TRANS	TRIM	DESCRIPTION
	05010884AA	1	J			ER0			
		1	J			EV0			
12									MAGNET, Transmission
	03681601	1	J			ER0			
		1	J			EV0			
13									VENT, Transfer Case
	04796910	1	J			ER0			
		1	J			EV0			
14									SEAL, Output Shaft
	04798117	1	J			ER0			
	05019026AA	1	J			EV0			
15									DOWEL, Transfer Case
	04116310	2	J			ER0			
		2	J			EV0			
16									WASHER, Flat
	04210983	2	J			ER0			
		2	J			EV0			
17									BOLT, Hex Flange Head
	04210614	2	J			ER0			
		2	J			EV0			
18		2							CLIP, (NOT REQUIRED)
19									SWITCH, Transfer Case, 5 Position
	05083138AA	1	J			ER0			
		1	J			EV0			
20									PLUG
	00015105	1	J			ER0			
		1	J			EV0			
21									VENT, Transfer Case
	04796910	1	J			ER0			
		1	J			EV0			
22									CASE, Transfer Rear
	04886373AA	1	J			ER0			
	05013858AA	1	J			EV0			

GRAND CHEROKEE (WJ)

SERIES	LINE	BODY	ENGINE	TRANSMISSION
H = Laredo M = Sport P = Limited S = Overland	T = JEEP - 2WD J = JEEP - 4WD U = JEEP - 4WD (RHD)	74 = SPORT UTILITY 4-DR	ERH = Engine - 4.0L Power Tech I-6 EVA = Engine- 4.7L V8 MPI EVC = Engine - 4.7L HO V8 MPI ER0 = All 4.0L 6 Cyl. Gas EV0 = All 4.7L Gas	DGK = 4 Speed Auto, 42RE DGQ = 5 Speed Auto, 45RFE DG0 = All Automatic Transmissions

AR = use ase required - = Non illustrrated part

Case and Related Parts Select Trac [DHP]
Figure 242-210

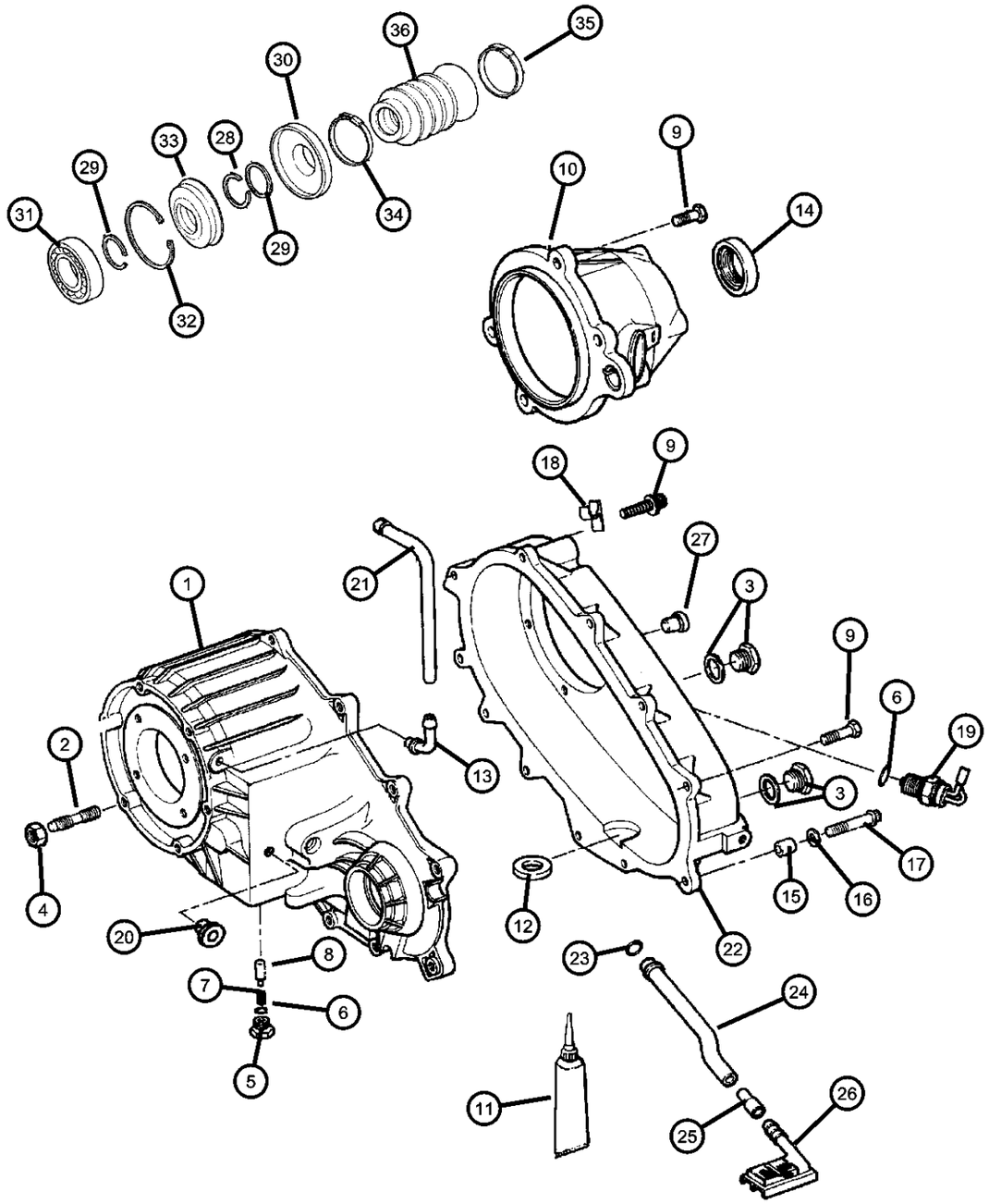

ITEM	PART NUMBER	QTY	LINE	SERIES	BODY	ENGINE	TRANS	TRIM	DESCRIPTION
23									SEAL, Oil
	04338942	1	J			ER0			
		1	J			EV0			
24									TUBE, Oil Pickup
	05003455AA	1	J			EV0			
	83503523	1	J			ER0			
25									CONNECTOR, Oil Tube Pickup
	04338944	1	J			ER0			
		1	J			EV0			
26									FILTER, Transfer Case Oil
	04338943	1	J			ER0			
		1	J			EV0			
27									BOLT, Twelve Point Head, M10x1.5x48
	J8130979	3	J			ER0			
		1	J			EV0			
28		1							SNAP RING, (NOT REQUIRED)
29		1							WASHER, (NOT REQUIRED)
30	05016615AA	1	J			ER0			SLINGER, Oil
31	04338892	1	J			ER0			BEARING
32	04798116	1	J			ER0			SNAP RING
33	05019026AA	1	J			EV0			SEAL, Output Shaft
34	04798122	1	J			ER0			CLAMP, Boot
35	04798122	1	J			ER0			CLAMP, Boot
36	04798123	1	J			ER0			BOOT, Driveshaft

GRAND CHEROKEE (WJ)

SERIES	LINE	BODY	ENGINE	TRANSMISSION
H = Laredo M = Sport P = Limited S = Overland	T = JEEP - 2WD J = JEEP - 4WD U = JEEP - 4WD (RHD)	74 = SPORT UTILITY 4-DR	ERH = Engine - 4.0L Power Tech I-6 EVA = Engine- 4.7L V8 MPI EVC = Engine - 4.7L HO V8 MPI ER0 = All 4.0L 6 Cyl. Gas EV0 = All 4.7L Gas	DGK = 4 Speed Auto, 42RE DGQ = 5 Speed Auto, 45RFE DG0 = All Automatic Transmissions

AR = use ase required - = Non illustrrated part

Gear Train Select Trac [DHP]
Figure 242-410

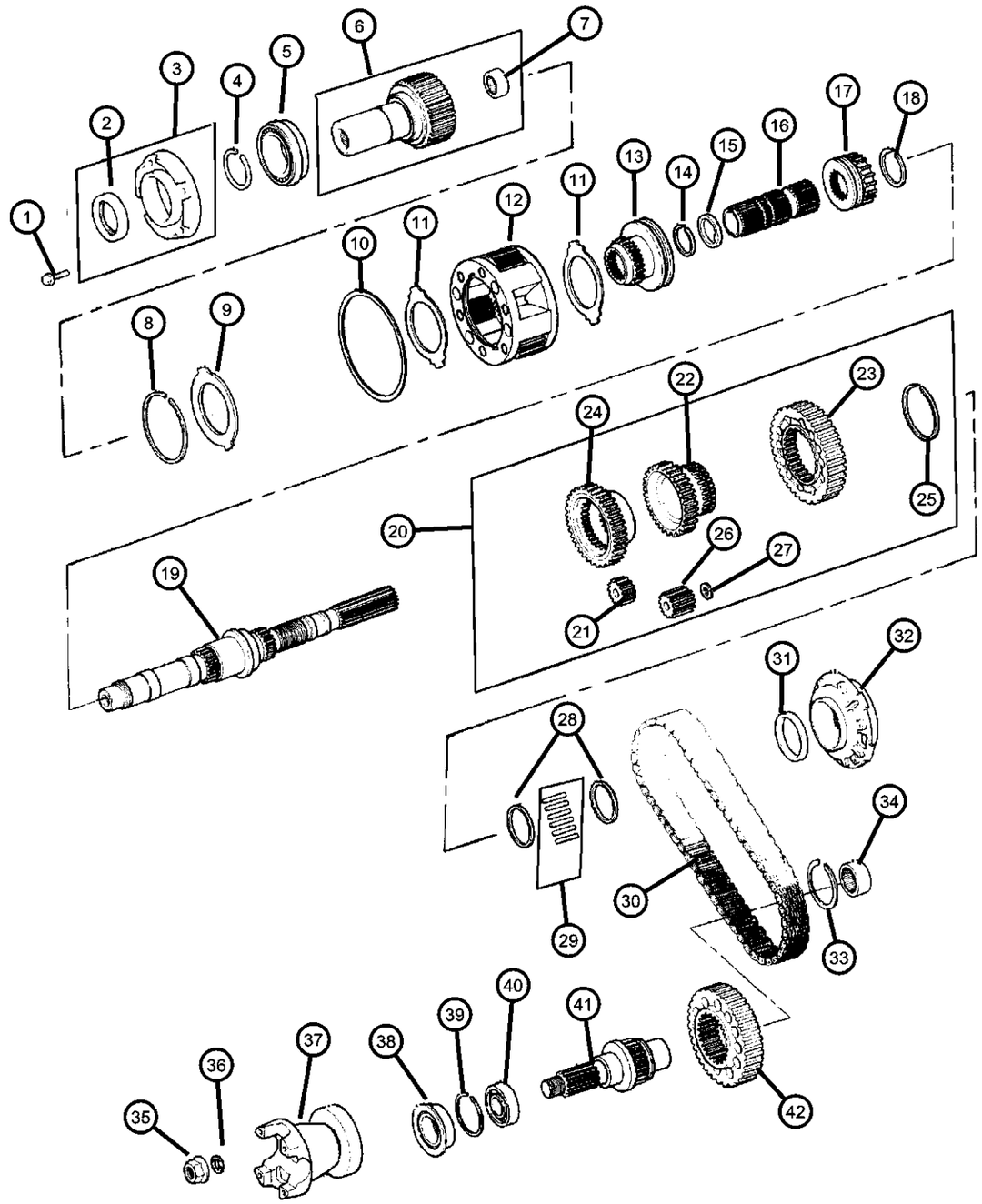

ITEM	PART NUMBER	QTY	LINE	SERIES	BODY	ENGINE	TRANS	TRIM	DESCRIPTION
1									BOLT
	06500318	4	J			EV0			
		4	J			ER0			
2									SEAL, Input Gear
	05019020AA	1	J			ER0			
		1	J			EV0			
3									EXTENSION, Transfer Case
	04338973	1	J			ER0			
		1	J			EV0			
4									SNAP RING
	0089331A	1	J			ER0			
		1	J			EV0			
5									BEARING, Input Gear
	04746155	1	J			ER0			
		1	J			EV0			
6									GEAR, Input
	05003446AA	1	J			ER0			
	05012311AA	1	J			EV0			
7									BEARING, Input Shaft
	83503507	1	J			ER0			
		1	J			EV0			
8									SNAP RING
	04338910	1	J			ER0			
		1	J			EV0			
9									RING
	04338909	1	J			EV0			
		1	J			ER0			
10									SNAP RING, Annulus Gear
	04219065	1	J			ER0			
		1	J			EV0			
11									THRUST WASHER, Planetary Carrier
	04338908	1	J			ER0			
		1	J			EV0			

GRAND CHEROKEE (WJ)

SERIES	LINE	BODY	ENGINE	TRANSMISSION
H = Laredo M = Sport P = Limited S = Overland	T = JEEP - 2WD J = JEEP - 4WD U = JEEP - 4WD (RHD)	74 = SPORT UTILITY 4-DR	ERH = Engine - 4.0L Power Tech I-6 EVA = Engine- 4.7L V8 MPI EVC = Engine - 4.7L HO V8 MPI ER0 = All 4.0L 6 Cyl. Gas EV0 = All 4.7L Gas	DGK = 4 Speed Auto, 42RE DGQ = 5 Speed Auto, 45RFE DG0 = All Automatic Transmissions

AR = use ase required - = Non illustrrated part

Gear Train Select Trac [DHP]
Figure 242-410

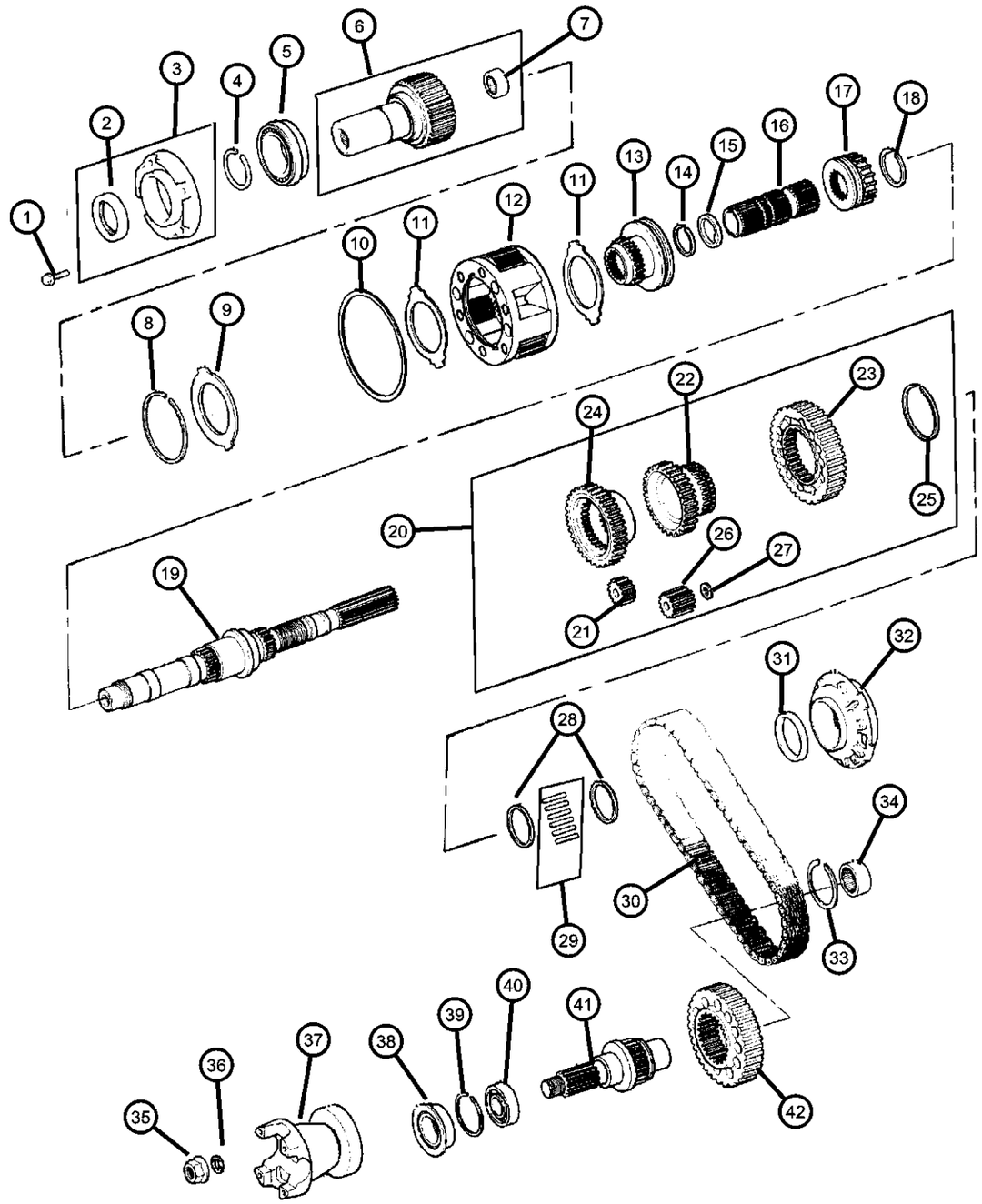

ITEM	PART NUMBER	QTY	LINE	SERIES	BODY	ENGINE	TRANS	TRIM	DESCRIPTION
12									PLANETARY, Transfer Case
	04796903AB	1	J			ER0			
		1	J			EV0			
13									SLEEVE, Shift Range
	04798279	1	J			EV0			
	05003746AA	1	J			ER0			
14									SNAP RING
	83503540	1	J			ER0			
		1	J			EV0			
15									WASHER, Intermediate Sleeve
	83503539	1	J			ER0			
		1	J			EV0			
16									SHAFT, Intermediate
	04798277	1	J			ER0			
		1	J			EV0			
17									SLEEVE, Mode Synchronizer
	83503542	1	J			ER0			
		1	J			EV0			
18									SNAP RING
	83503537	1	J			ER0			
		1	J			EV0			
19									MAINSHAFT, Transfer Case
	05003448AA	1	J			EV0			
	05016614AA	1	J			ER0			
	05080995AA	1	J			EV0			52099362AE
20									DIFFERENTIAL, Transfer Case
	05003449AB	1	J			EV0			
	83503529	1	J			ER0			
21									GEAR, Planetary
	83504170	1	J			EV0			
		3	J			ER0			
22	05003452AA	1	J			EV0			SPROCKET, Transfer Case
23									SPROCKET, Differential

GRAND CHEROKEE (WJ)

SERIES	LINE	BODY	ENGINE	TRANSMISSION
H = Laredo M = Sport P = Limited S = Overland	T = JEEP - 2WD J = JEEP - 4WD U = JEEP - 4WD (RHD)	74 = SPORT UTILITY 4-DR	ERH = Engine - 4.0L Power Tech I-6 EVA = Engine- 4.7L V8 MPI EVC = Engine - 4.7L HO V8 MPI ER0 = All 4.0L 6 Cyl. Gas EV0 = All 4.7L Gas	DGK = 4 Speed Auto, 42RE DGQ = 5 Speed Auto, 45RFE DG0 = All Automatic Transmissions

AR = use ase required - = Non illustrrated part

Gear Train Select Trac [DHP]
Figure 242-410

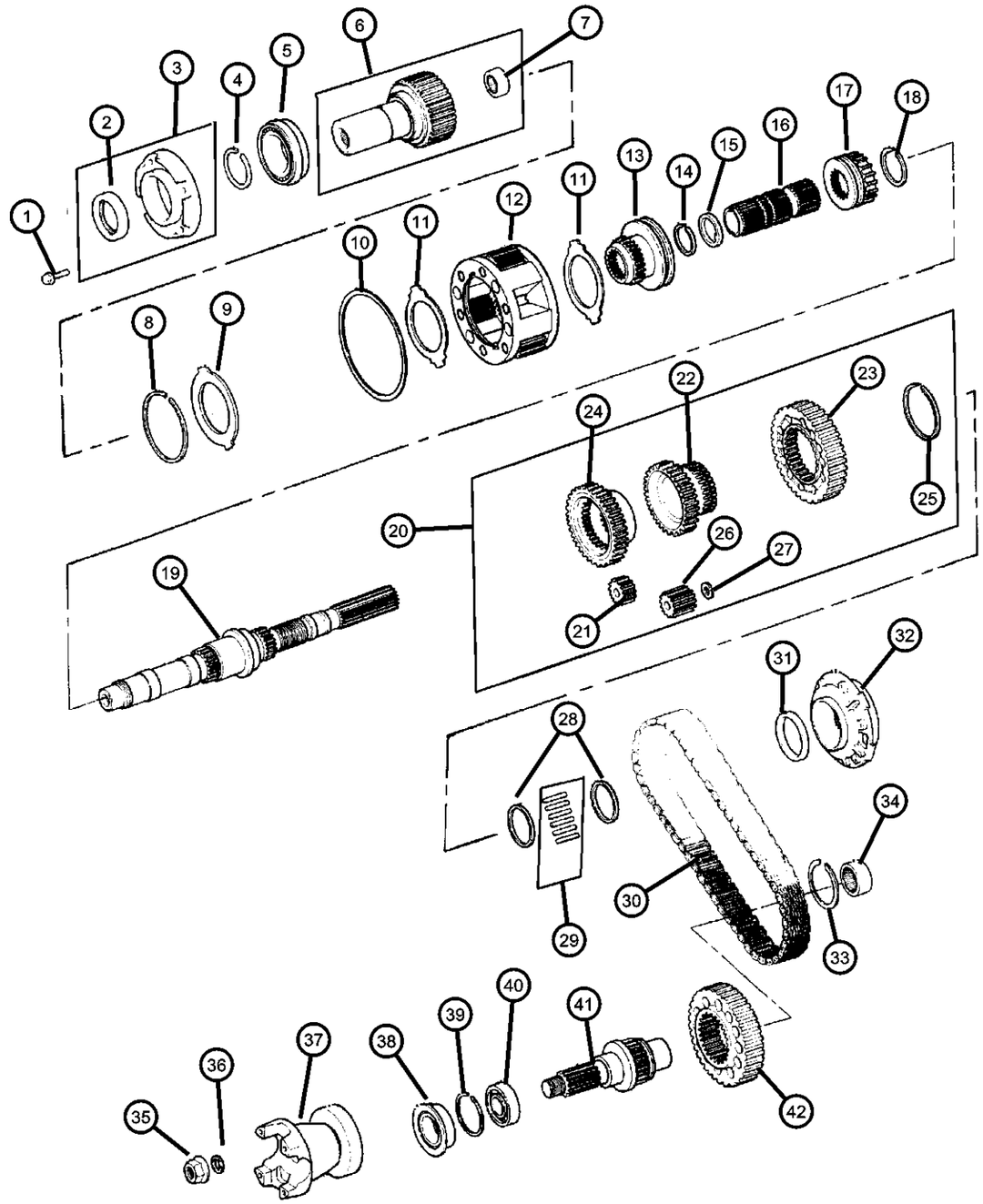

ITEM	PART NUMBER	QTY	LINE	SERIES	BODY	ENGINE	TRANS	TRIM	DESCRIPTION
	83503536	1	J			ER0			
		1	J			EV0			
24									GEAR, Differential Drive
	05003450AA	1	J			EV0			
	83503530	1	J			ER0			
25									SNAP RING
	83503532	1	J			ER0			
		1	J			EV0			
26									GEAR, Planetary
	83504169	3	J			ER0			
		3	J			EV0			
27									WASHER, Differential Gear
	83504168	12	J			ER0			
		12	J			EV0			
28		12							SPACER, Sprocket, (NOT REQUIRED)
29									NEEDLE BEARING, Roller Cage, None
	05066996AA	1	J			EV0			
	05072910AA	1	J			ER0			
30									CHAIN, Transfer Case
	05003453AA	1	J			EV0			
	83504575	1	J			ER0			
31	04210603	1	J			ER0			SEAL, Main Shaft
32	04338936	1	J			ER0			PUMP, Transfer Case Oil
33									SNAP RING, Bearing
	04167991	1	J			ER0			
		1	J			EV0			
34									BEARING, Output Shaft
	04269189	1	J			ER0			
		1	J			EV0			
35									NUT, Transfer Case Yoke
	04167924	1	J			ER0			
		1	J			EV0			

GRAND CHEROKEE (WJ)

SERIES	LINE	BODY	ENGINE	TRANSMISSION
H = Laredo M = Sport P = Limited S = Overland	T = JEEP - 2WD J = JEEP - 4WD U = JEEP - 4WD (RHD)	74 = SPORT UTILITY 4-DR	ERH = Engine - 4.0L Power Tech I-6 EVA = Engine- 4.7L V8 MPI EVC = Engine - 4.7L HO V8 MPI ER0 = All 4.0L 6 Cyl. Gas EV0 = All 4.7L Gas	DGK = 4 Speed Auto, 42RE DGQ = 5 Speed Auto, 45RFE DG0 = All Automatic Transmissions

AR = use ase required - = Non illustrrated part

Gear Train Select Trac [DHP]
Figure 242-410

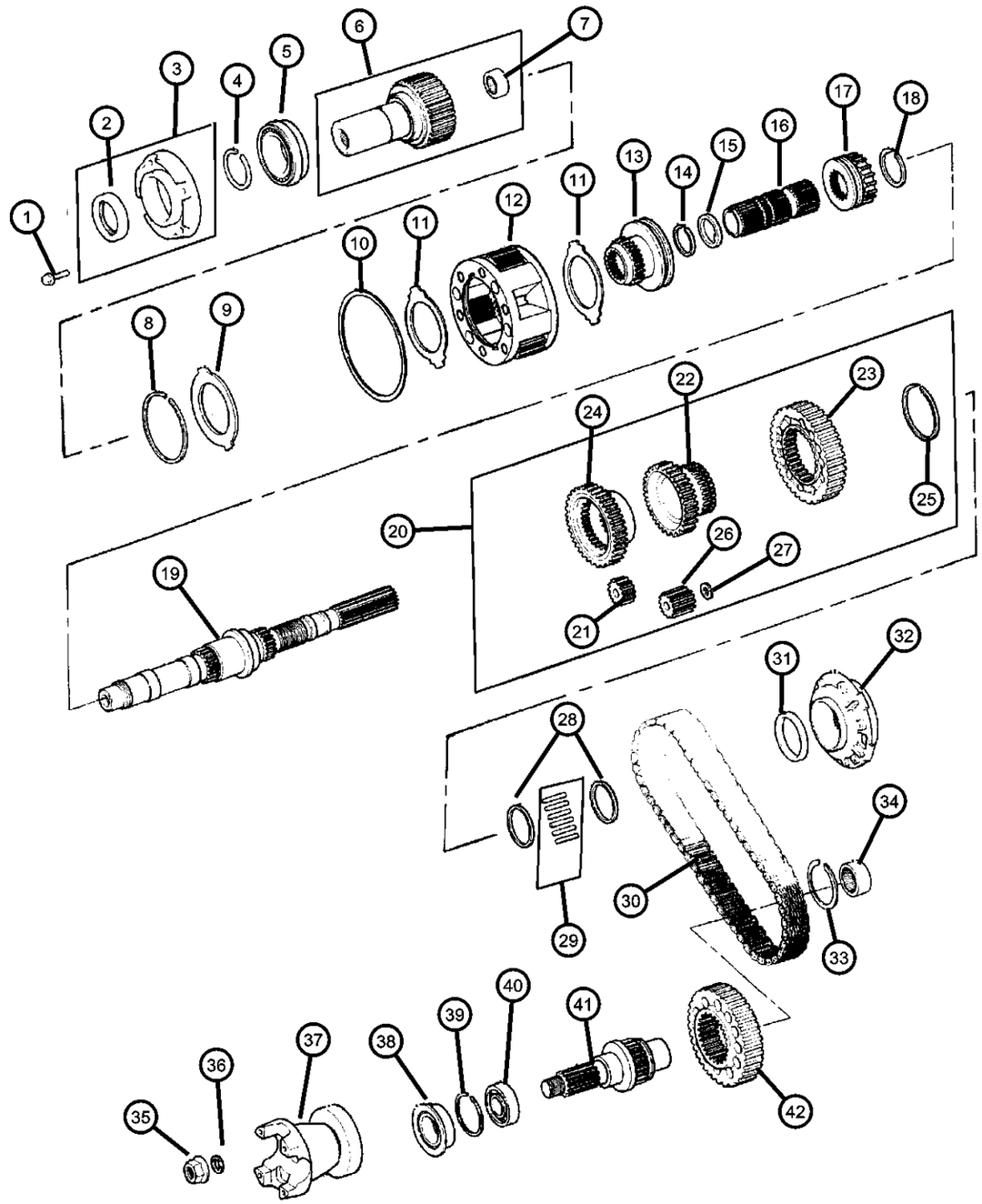

ITEM	PART NUMBER	QTY	LINE	SERIES	BODY	ENGINE	TRANS	TRIM	DESCRIPTION
36									WASHER, Transfer Case Yoke
	04210973	1	J			ER0			
		1	J			EV0			
37									YOKE, Transfer Case
	05012308AA	1	J			ER0			
	05019514AA	1	J			EV0			W/Slinger
38									SEAL, Output Shaft
	04798125	1	J			ER0			
		1	J			EV0			
39									SNAP RING
	0089331A	1	J			ER0			
		1	J			EV0			
40									BEARING, Output Shaft
	02466224	1	J			ER0			
		1	J			EV0			
41									OUTPUT SHAFT, Transfer Case
	05012336AA	1	J			ER0			
		1	J			EV0			
42									SPROCKET, Transfer Case
	05003452AA	1	J			EV0			
	83503518	1	J			ER0			

GRAND CHEROKEE (WJ)

SERIES	LINE	BODY	ENGINE	TRANSMISSION
H = Laredo M = Sport P = Limited S = Overland	T = JEEP - 2WD J = JEEP - 4WD U = JEEP - 4WD (RHD)	74 = SPORT UTILITY 4-DR	ERH = Engine - 4.0L Power Tech I-6 EVA = Engine- 4.7L V8 MPI EVC = Engine - 4.7L HO V8 MPI ER0 = All 4.0L 6 Cyl. Gas EV0 = All 4.7L Gas	DGK = 4 Speed Auto, 42RE DGQ = 5 Speed Auto, 45RFE DG0 = All Automatic Transmissions

AR = use ase required - = Non illustrrated part

Fork and Rails Select Trac [DHP]
Figure 242-910

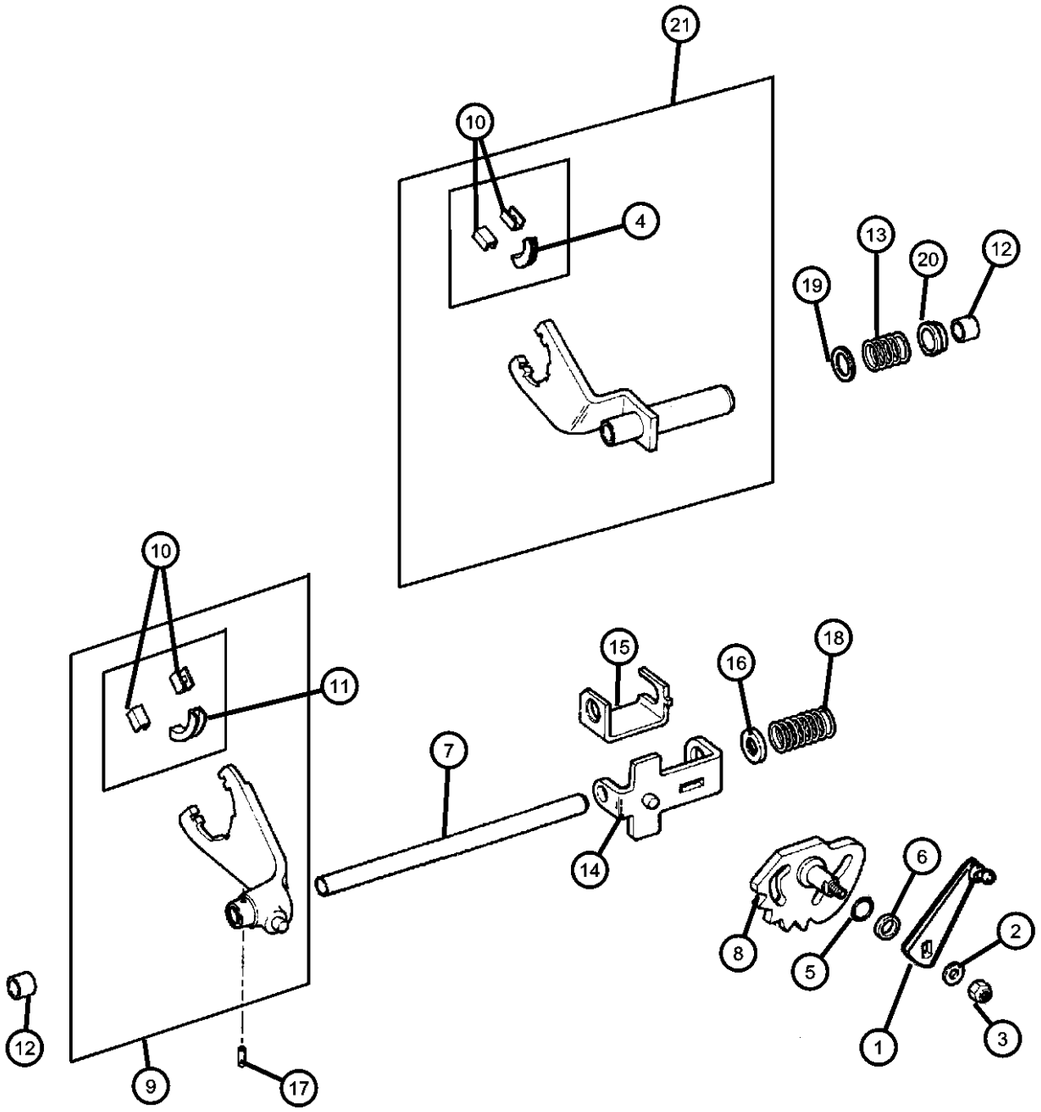

ITEM	PART NUMBER	QTY	LINE	SERIES	BODY	ENGINE	TRANS	TRIM	DESCRIPTION
1									LEVER, Transfer Case
	05012307AA	1	J			ER0			
		1	J			EV0			
2									WASHER, Flat
	04210983	2	J			ER0			
		2	J			EV0			
3									BOLT, Hex Head
	05014048AA	1	J			ER0			
		1	J			EV0			
4									PAD, Shift Fork
	04167969	1	J			EV0			
	04338376	1	J			ER0			
5	05014046AA	1	J			EV0			SEAL, Sector Shaft
6									BEARING, Shift Lever Linkage
	05003442AA	1	J			ER0			
		1	J			EV0			
7									RAIL, Transfer Case
	83504469	1	J			ER0			
		1	J			EV0			
8									SECTOR, Transfer Case
	05072569AA	1	J			ER0			
		1	J			EV0			
9									FORK, Range
	05003459AA	1	J			ER0			
		1	J			EV0			
10									PAD, Shift Fork
	04167969	2	J			ER0			
		2	J			EV0			
11									PAD, Shift Fork
	04167970	1	J			ER0			
		1	J			EV0			
12									BUSHING, Shift Fork
	J8134291	2	J			ER0			

GRAND CHEROKEE (WJ)

SERIES	LINE	BODY	ENGINE	TRANSMISSION
H = Laredo M = Sport P = Limited S = Overland	T = JEEP - 2WD J = JEEP - 4WD U = JEEP - 4WD (RHD)	74 = SPORT UTILITY 4-DR	ERH = Engine - 4.0L Power Tech I-6 EVA = Engine- 4.7L V8 MPI EVC = Engine - 4.7L HO V8 MPI ER0 = All 4.0L 6 Cyl. Gas EV0 = All 4.7L Gas	DGK = 4 Speed Auto, 42RE DGQ = 5 Speed Auto, 45RFE DG0 = All Automatic Transmissions

Fork and Rails Select Trac [DHP]
Figure 242-910

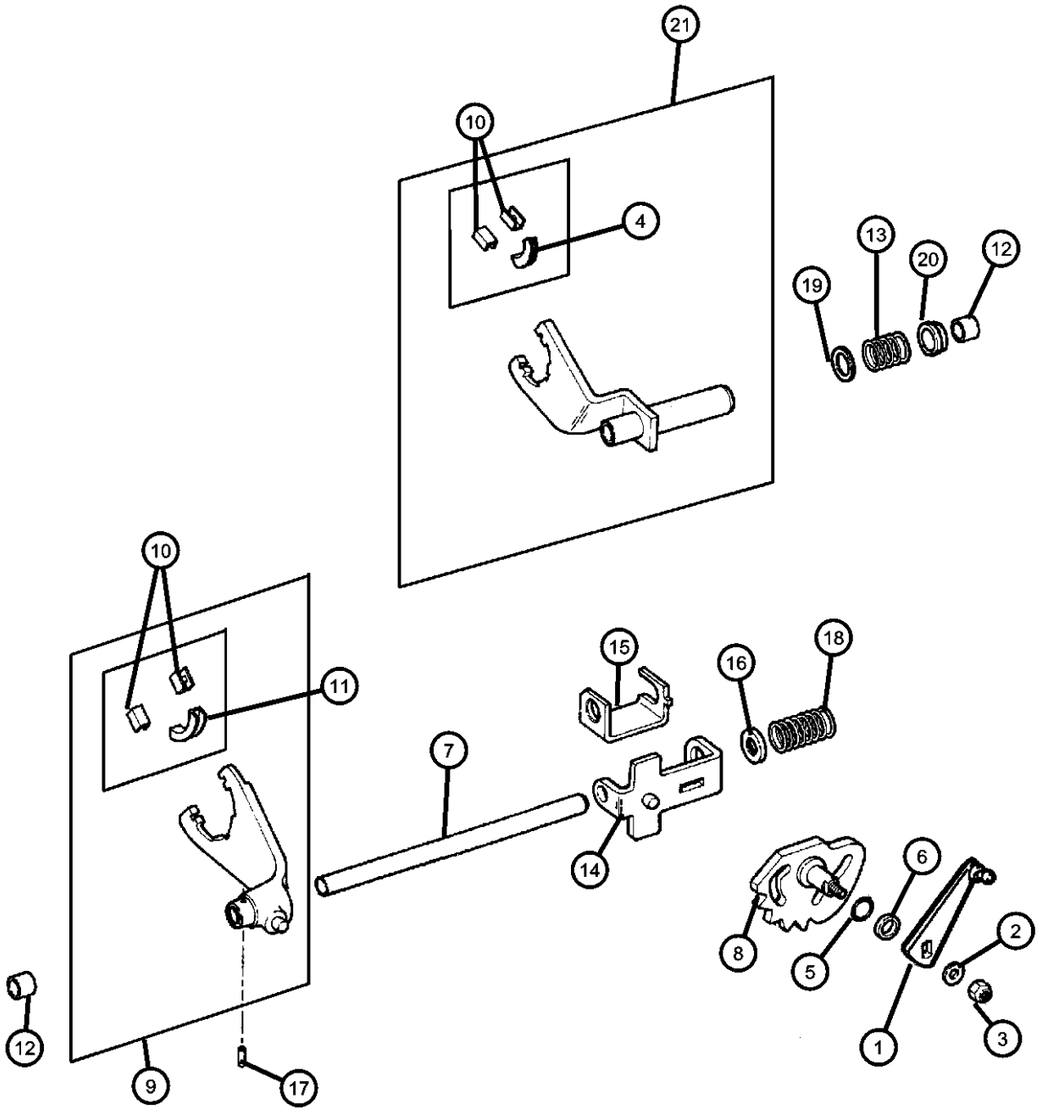

ITEM	PART NUMBER	QTY	LINE	SERIES	BODY	ENGINE	TRANS	TRIM	DESCRIPTION
		2	J			EV0			
13									SPRING, Mode Shift Fork
	83503513	1	J			EV0			
	83503516	1	J			ER0			
14									BRACKET, Shift Mode
	83503510	1	J			EV0			
	83503511	1	J			ER0			
15									BRACKET, Shift Mode
	83503510	1	J			EV0			
	83503511	1	J			ER0			
16									CUP, Shift Fork Spring
	83503515	1	J			ER0			
		1	J			EV0			
17									PIN, Shift Fork
	01664355	1	J			ER0			
		1	J			EV0			
18									SPRING, Mode Shift Fork
	83503513	1	J			EV0			
	83503516	1	J			ER0			
19									WASHER, Flat
	83503512	1	J			ER0			
		1	J			EV0			
20									BUSHING, Shift Rail
	83503514	1	J			ER0			
		1	J			EV0			
21									FORK, Transfer Case Mode Shift
	04638950	1	J			ER0			
		1	J			EV0			

GRAND CHEROKEE (WJ)

SERIES	LINE	BODY	ENGINE	TRANSMISSION
H = Laredo M = Sport P = Limited S = Overland	T = JEEP - 2WD J = JEEP - 4WD U = JEEP - 4WD (RHD)	74 = SPORT UTILITY 4-DR	ERH = Engine - 4.0L Power Tech I-6 EVA = Engine- 4.7L V8 MPI EVC = Engine - 4.7L HO V8 MPI ER0 = All 4.0L 6 Cyl. Gas EV0 = All 4.7L Gas	DGK = 4 Speed Auto, 42RE DGQ = 5 Speed Auto, 45RFE DG0 = All Automatic Transmissions

Gearshift Controls Select Trac [DHP]
Figure 242-1210

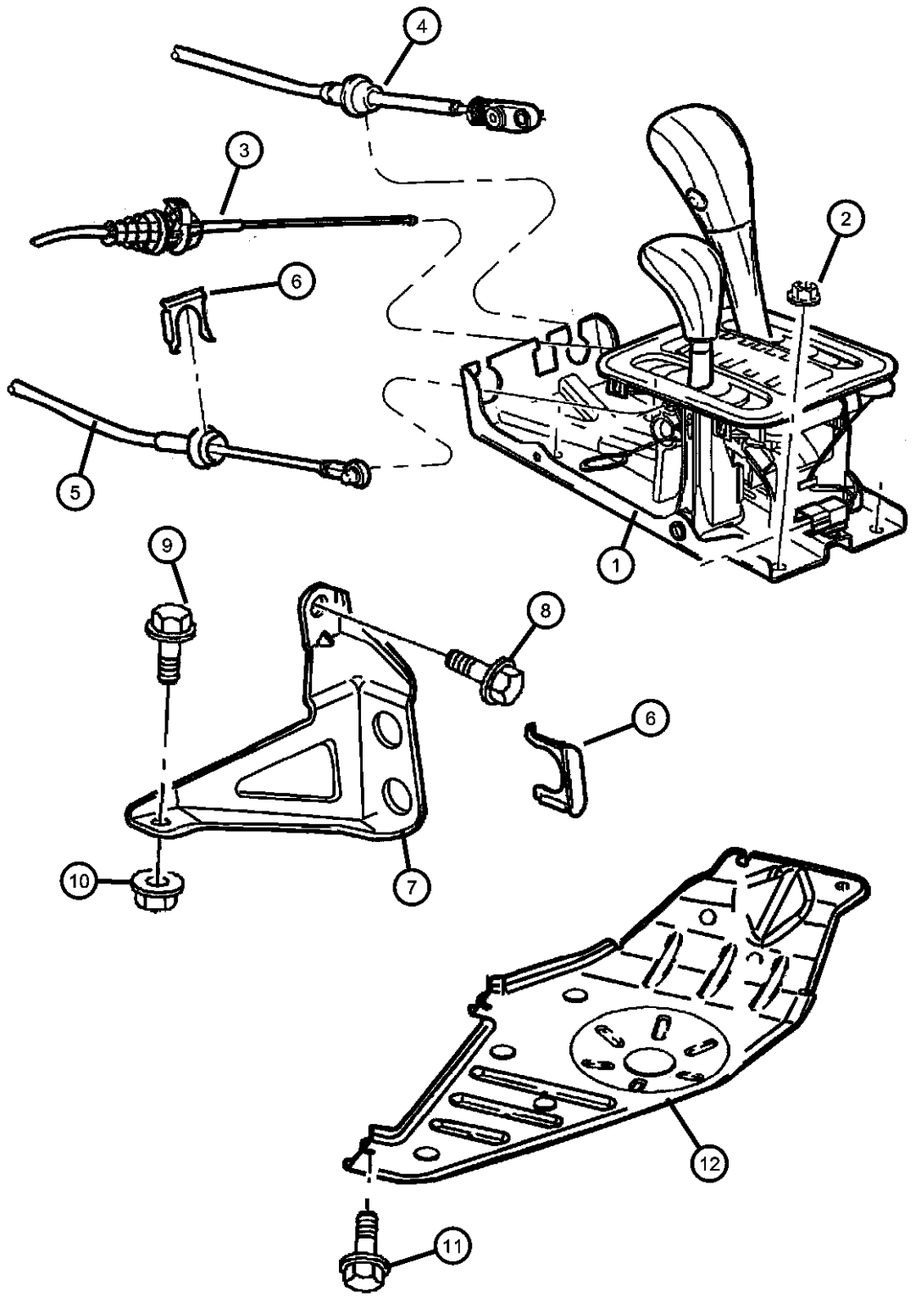

ITEM	PART NUMBER	QTY	LINE	SERIES	BODY	ENGINE	TRANS	TRIM	DESCRIPTION
NOTES: Sales Codes [DGK] = 42RE 4 Speed Automatic Transmissions [DGQ] = 45RFE 5 Speed Automatic Transmissions [DG0] = All Automatic Transmissions [ER0] = All 4.0L Gas Engines [EV0] = All 4.7L Gas Engines									
1	52109671AB	1	J			ER0, EV0	DGK, DGQ		HOUSING AND LEVER, Shifter
2	06101695	4							NUT, Hex Flange Lock, M8x1.25
3	52109606AA	1					DG0		CABLE, Park Interlock
4	52104060AC	1					DG0		CABLE, Gearshift Control
5	52104218AB	1	J				DG0		CABLE, Gearshift Control
6	04269830	2	J						CLIP, Cable
7									BRACKET, Torque Shaft
	52104219	1	J				DGK		
	52104220AB	1	J				DGQ		
8	06503119	4							SCREW AND WASHER, Hex Head, M10x1.5x40
9	06101054	1	J				DGK		BOLT AND WASHER, Hex Head, M10x1.5x40
10	06503231	1	J				DGK		NUT, Brake Line
11	06503571	4							SCREW AND WASHER, M10x1.50x35
12	52058922	1	J						SKID PLATE, Transfer Case

GRAND CHEROKEE (WJ)

SERIES	LINE	BODY	ENGINE	TRANSMISSION
H = Laredo M = Sport P = Limited S = Overland	T = JEEP - 2WD J = JEEP - 4WD U = JEEP - 4WD (RHD)	74 = SPORT UTILITY 4-DR	ERH = Engine - 4.0L Power Tech I-6 EVA = Engine- 4.7L V8 MPI EVC = Engine - 4.7L HO V8 MPI ER0 = All 4.0L 6 Cyl. Gas EV0 = All 4.7L Gas	DGK = 4 Speed Auto, 42RE DGQ = 5 Speed Auto, 45RFE DG0 = All Automatic Transmissions

Group - 247

Transfer Case Model 247 [DHF, DHQ]

247-100 Transfer Case Assembly 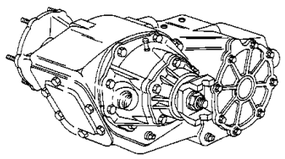	**247-1200** Gearshift Controls 	**247-200** Case and Related Parts 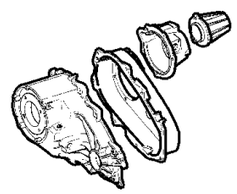	**247-400** Gear Train 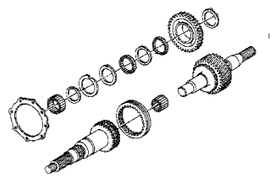
247-900 Fork and Rails 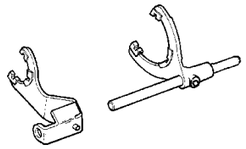			

Group - 247 Transfer Case Model 247 [DHF, DHQ]

Illustration Title — Group-Fig. No.

Transfer Case Assembly
Transfer Case Quadra Trac II on Demand [DHF] ..... Fig. 247 - 110

Case and Related Parts
Case and Related Parts Quadra Trac II on Demand [DHF] ..... Fig. 247 - 210

Gear Train
Gear Train Quadra Trac II on Demand [DHF] ..... Fig. 247 - 410

Fork and Rails
Fork and Rails Quadra Trac II on Demand [DHF] ..... Fig. 247 - 910

Gearshift Controls
Gearshift Controls Quadra Trac II on Demand [DHF] ..... Fig. 247 - 1210

Transfer Case Quadra Trac II on Demand [DHF]
Figure 247-110

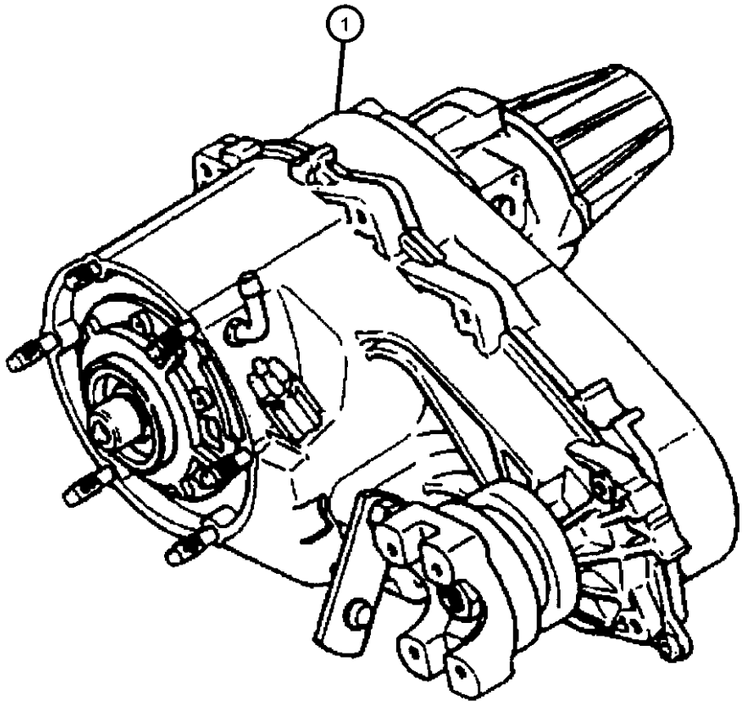

ITEM	PART NUMBER	QTY	LINE	SERIES	BODY	ENGINE	TRANS	TRIM	DESCRIPTION
1									TRANSFER CASE, NP247
	52098871AC	1	J			ER0			
	R2098871AD								Mopar Remanufactured Part
	52105905AA	1	J			EV0			
	R2105905AB								Mopar Remanufactured Part

GRAND CHEROKEE (WJ)

SERIES	LINE	BODY	ENGINE	TRANSMISSION
H = Laredo M = Sport P = Limited S = Overland	T = JEEP - 2WD J = JEEP - 4WD U = JEEP - 4WD (RHD)	74 = SPORT UTILITY 4-DR	ERH = Engine - 4.0L Power Tech I-6 EVA = Engine- 4.7L V8 MPI EVC = Engine - 4.7L HO V8 MPI ER0 = All 4.0L 6 Cyl. Gas EV0 = All 4.7L Gas	DGK = 4 Speed Auto, 42RE DGQ = 5 Speed Auto, 45RFE DG0 = All Automatic Transmissions

Case and Related Parts Quadra Trac II on Demand [DHF]
Figure 247-210

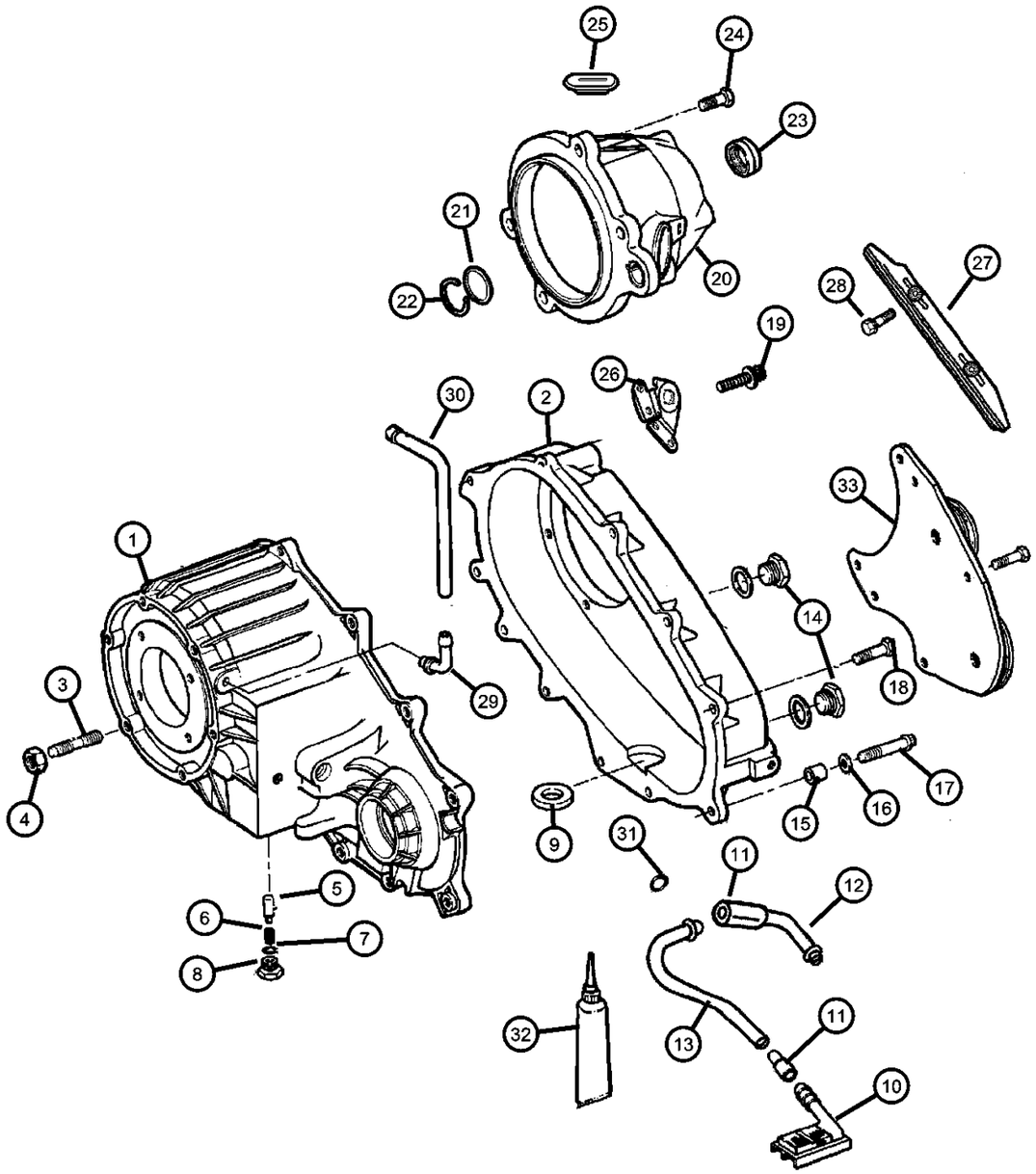

ITEM	PART NUMBER	QTY	LINE	SERIES	BODY	ENGINE	TRANS	TRIM	DESCRIPTION
NOTES: Sales Codes [ER0] = All 4.0L 6 Cylinder Gas Engines [EV0] = All 4.7L Gas Engines									
1									CASE, Transfer Front
	05012309AA	1	J			ER0			
		1	J			EV0			
2									CASE, Transfer Case Rear
	05012323AA	1	J			ER0			
		1	J			EV0			
3									STUD
	04505365	6	J			ER0			
	05012310AA	6	J			EV0			
4	06033172	6	J						NUT AND WASHER, Hex, .375-24
5									PLUNGER
	53008217	1	J			ER0			
		1	J			EV0			
6									SPRING, Shift Detent
	04638497	1	J			ER0			
		1	J			EV0			
7									SEAL, Vacuum Switch
	04338956	1	J			ER0			
		1	J			EV0			
8									SCREW
	04886473AA	1	J			ER0			
		1	J			EV0			
9									MAGNET, Transmission
	03681601	1	J			ER0			
		1	J			EV0			
10									FILTER, Transfer Case Oil
	05012326AA	1	J			ER0			
		1	J			EV0			
11									CONNECTOR, Oil Tube Pickup
	05012327AA	2	J			ER0			
		2	J			EV0			

GRAND CHEROKEE (WJ)

SERIES	LINE	BODY	ENGINE	TRANSMISSION
H = Laredo M = Sport P = Limited S = Overland	T = JEEP - 2WD J = JEEP - 4WD U = JEEP - 4WD (RHD)	74 = SPORT UTILITY 4-DR	ERH = Engine - 4.0L Power Tech I-6 EVA = Engine- 4.7L V8 MPI EVC = Engine - 4.7L HO V8 MPI ER0 = All 4.0L 6 Cyl. Gas EV0 = All 4.7L Gas	DGK = 4 Speed Auto, 42RE DGQ = 5 Speed Auto, 45RFE DG0 = All Automatic Transmissions

Case and Related Parts Quadra Trac II on Demand [DHF]
Figure 247-210

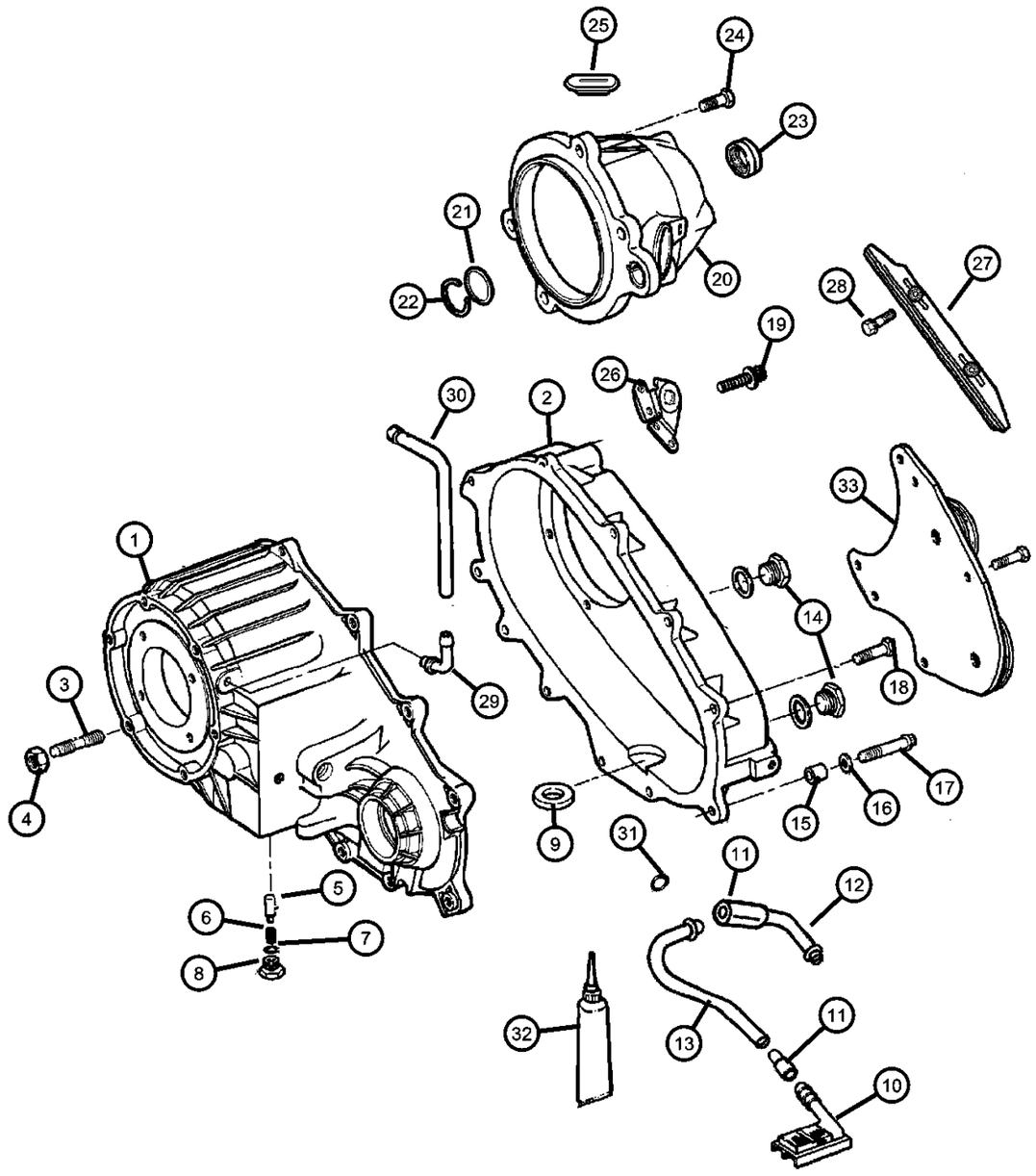

ITEM	PART NUMBER	QTY	LINE	SERIES	BODY	ENGINE	TRANS	TRIM	DESCRIPTION
12									TUBE, Oil Pickup
	05012328AA	1	J			ER0			
		1	J			EV0			
13									TUBE, Oil Pickup
	05013018AA	1	J			ER0			
		1	J			EV0			
14									PLUG, Oil Fill
	04856641	2	J			ER0			
		2	J			EV0			
15									DOWEL, Transfer Case
	04116310	2	J			ER0			
		2	J			EV0			
16									WASHER, Flat
	04210983	2	J			ER0			
		2	J			EV0			
17									BOLT, Hex Flange Head
	04210614	2	J			ER0			
		2	J			EV0			
18									BOLT, Transfer Case
	04210617	6	J			ER0			
		6	J			EV0			
19									BOLT, Twelve Point Head, M10x1.5x48
	J8130979	3	J			ER0			
		3	J			EV0			
20									RETAINER, Transfer Case Rear
	05066086AA	1	J			ER0			
		1	J			EV0			
21									BUSHING, Extension Housing
	04638902	1	J			ER0			
		1	J			EV0			
22									SNAP RING
	0089331A	1	J			EV0			

GRAND CHEROKEE (WJ)

SERIES	LINE	BODY	ENGINE	TRANSMISSION
H = Laredo M = Sport P = Limited S = Overland	T = JEEP - 2WD J = JEEP - 4WD U = JEEP - 4WD (RHD)	74 = SPORT UTILITY 4-DR	ERH = Engine - 4.0L Power Tech I-6 EVA = Engine- 4.7L V8 MPI EVC = Engine - 4.7L HO V8 MPI ER0 = All 4.0L 6 Cyl. Gas EV0 = All 4.7L Gas	DGK = 4 Speed Auto, 42RE DGQ = 5 Speed Auto, 45RFE DG0 = All Automatic Transmissions

AR = use ase required - = Non illustrrated part

Case and Related Parts Quadra Trac II on Demand [DHF]
Figure 247-210

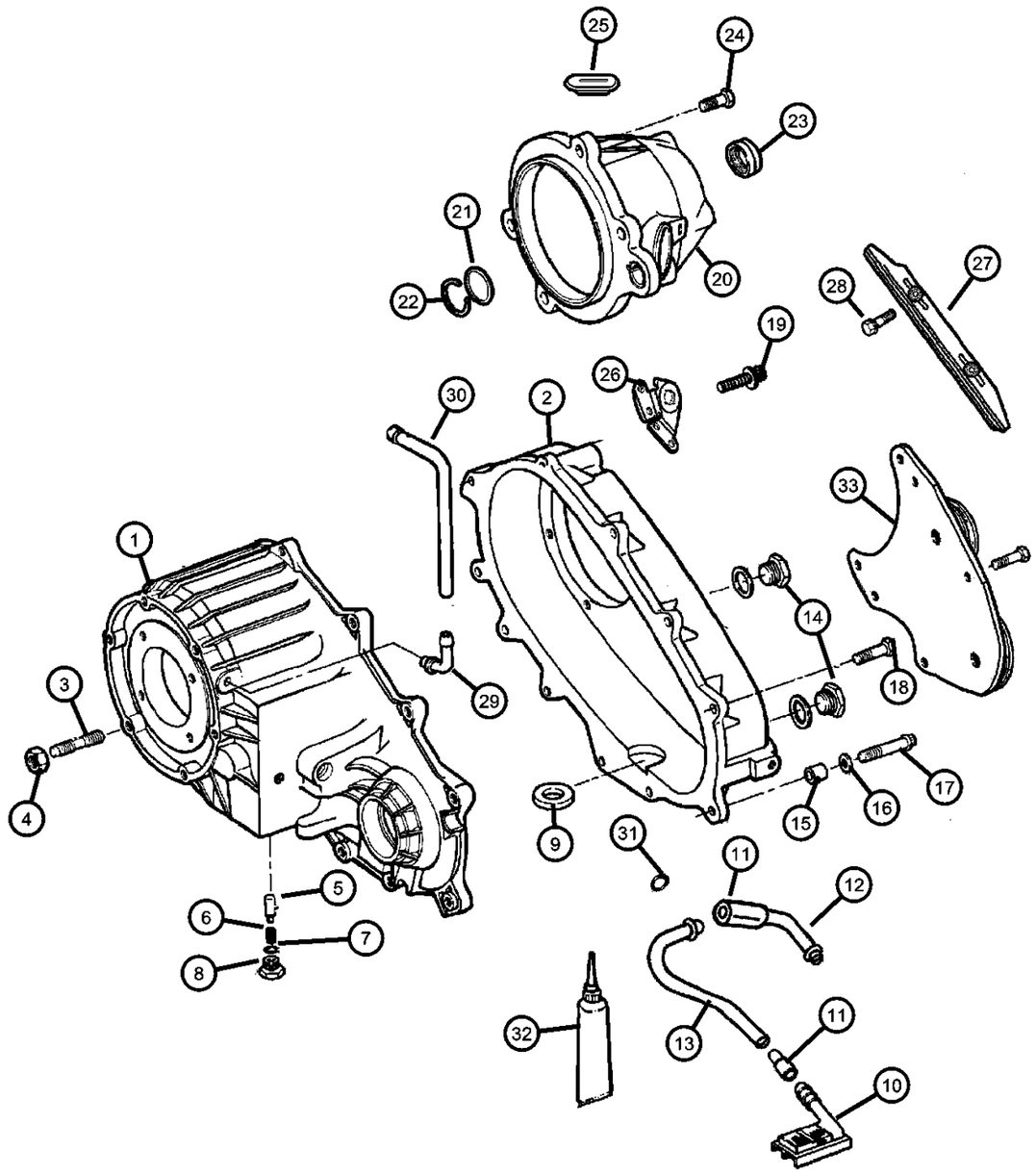

ITEM	PART NUMBER	QTY	LINE	SERIES	BODY	ENGINE	TRANS	TRIM	DESCRIPTION
		1	J			ER0			
23									SEAL, Output Shaft
	04897298AA	1	J			ER0			
		1	J			EV0			
24									BOLT, Retainer
	06501371	4	J			ER0			
		4	J			EV0			
25									PLUG
	05018919AA	1	J			ER0			
		1	J			EV0			
26		1							CLIP, (NOT REQUIRED)
27									SNUBBER, Chain
	05012324AA	1	J			ER0			
		1	J			EV0			
28									BOLT
	05012325AA	2	J			ER0			
		2	J			EV0			
29									VENT, Transfer Case
	04796910	1	J			ER0			
		1	J			EV0			
30	52099366AD	1	J						VENT, Transfer Case
31									SEAL, Transfer Case
	05013016AB	1	J			ER0			
		1	J			EV0			
32									SEALANT, RTV
	05010884AA	1	J			ER0			
		1	J			EV0			
33		1							DAMPER, Transfer Case, (NOT REQUIRED)

GRAND CHEROKEE (WJ)

SERIES	LINE	BODY	ENGINE	TRANSMISSION
H = Laredo M = Sport P = Limited S = Overland	T = JEEP - 2WD J = JEEP - 4WD U = JEEP - 4WD (RHD)	74 = SPORT UTILITY 4-DR	ERH = Engine - 4.0L Power Tech I-6 EVA = Engine- 4.7L V8 MPI EVC = Engine - 4.7L HO V8 MPI ER0 = All 4.0L 6 Cyl. Gas EV0 = All 4.7L Gas	DGK = 4 Speed Auto, 42RE DGQ = 5 Speed Auto, 45RFE DG0 = All Automatic Transmissions

AR = use ase required - = Non illustrrated part

Gear Train Quadra Trac II on Demand [DHF]
Figure 247-410

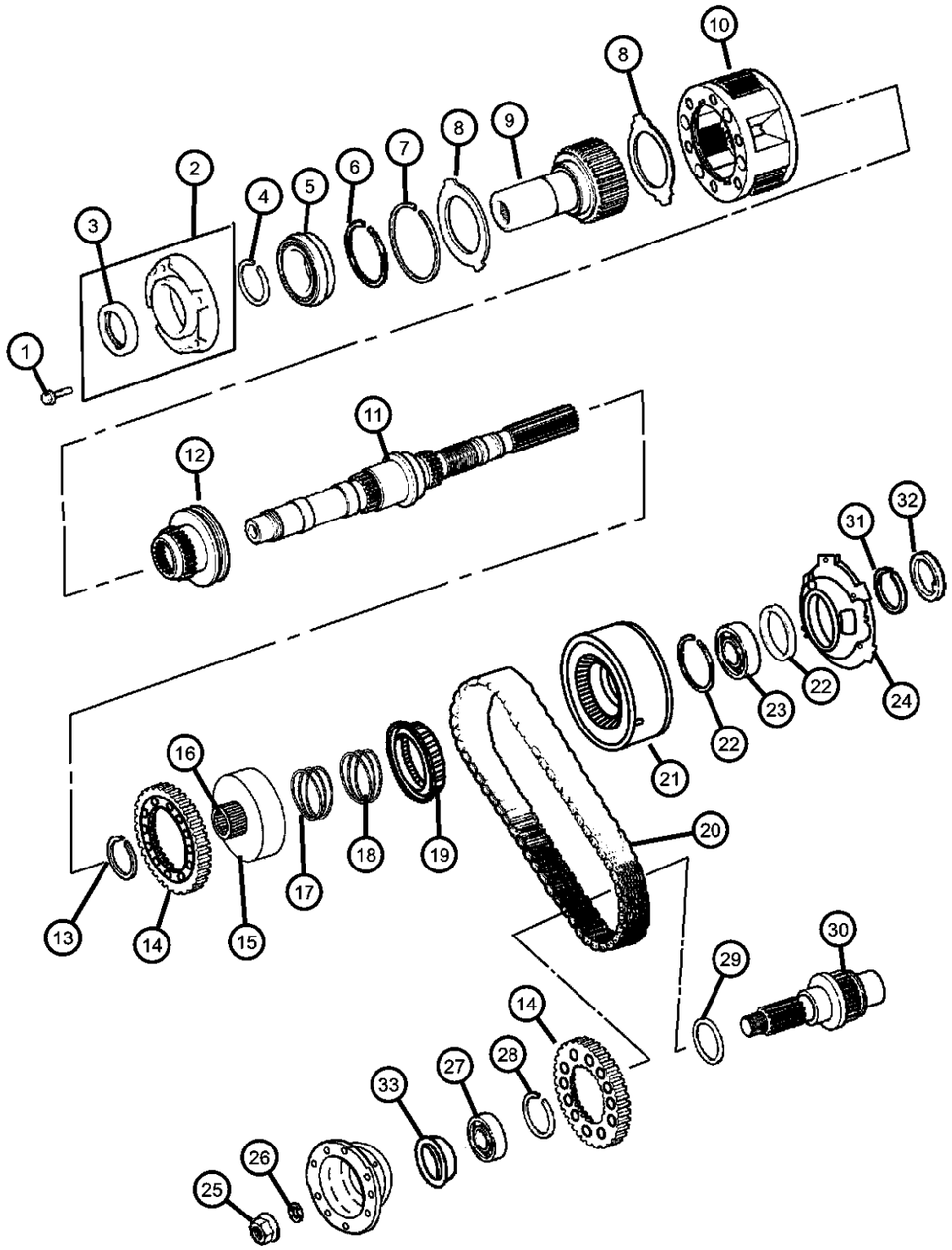

ITEM	PART NUMBER	QTY	LINE	SERIES	BODY	ENGINE	TRANS	TRIM	DESCRIPTION
1									BOLT
	06500318	4	J			ER0			
		4	J			EV0			
2									EXTENSION, Transfer Case
	04864782	1	J			ER0			
		1	J			EV0			
3									SEAL, Input Gear
	04798033	1	J			ER0			
		1	J			EV0			
4									SNAP RING
	03821558	1	J			ER0			
		1	J			EV0			
5									BEARING, Input Gear
	04746155	1	J			ER0			
		1	J			EV0			
6									SNAP RING
	04338910	1	J			ER0			
		1	J			EV0			
7									RING
	04338909	1	J			ER0			
		1	J			EV0			
8									THRUST WASHER, Planetary Carrier
	04338908	2	J			ER0			
		2	J			EV0			
9									GEAR, Input
	04798126	1	J			ER0			
	05012311AA	1	J			EV0			
10									PLANETARY, Transfer Case
	04796903AB	1	J			ER0			
		1	J			EV0			
11									MAINSHAFT, Transfer Case
	05012313AA	1	J			ER0			
		1	J			EV0			

GRAND CHEROKEE (WJ)

SERIES	LINE	BODY	ENGINE	TRANSMISSION
H = Laredo M = Sport P = Limited S = Overland	T = JEEP - 2WD J = JEEP - 4WD U = JEEP - 4WD (RHD)	74 = SPORT UTILITY 4-DR	ERH = Engine - 4.0L Power Tech I-6 EVA = Engine- 4.7L V8 MPI EVC = Engine - 4.7L HO V8 MPI ER0 = All 4.0L 6 Cyl. Gas EV0 = All 4.7L Gas	DGK = 4 Speed Auto, 42RE DGQ = 5 Speed Auto, 45RFE DG0 = All Automatic Transmissions

AR = use ase required - = Non illustrrated part

Gear Train Quadra Trac II on Demand [DHF]
Figure 247-410

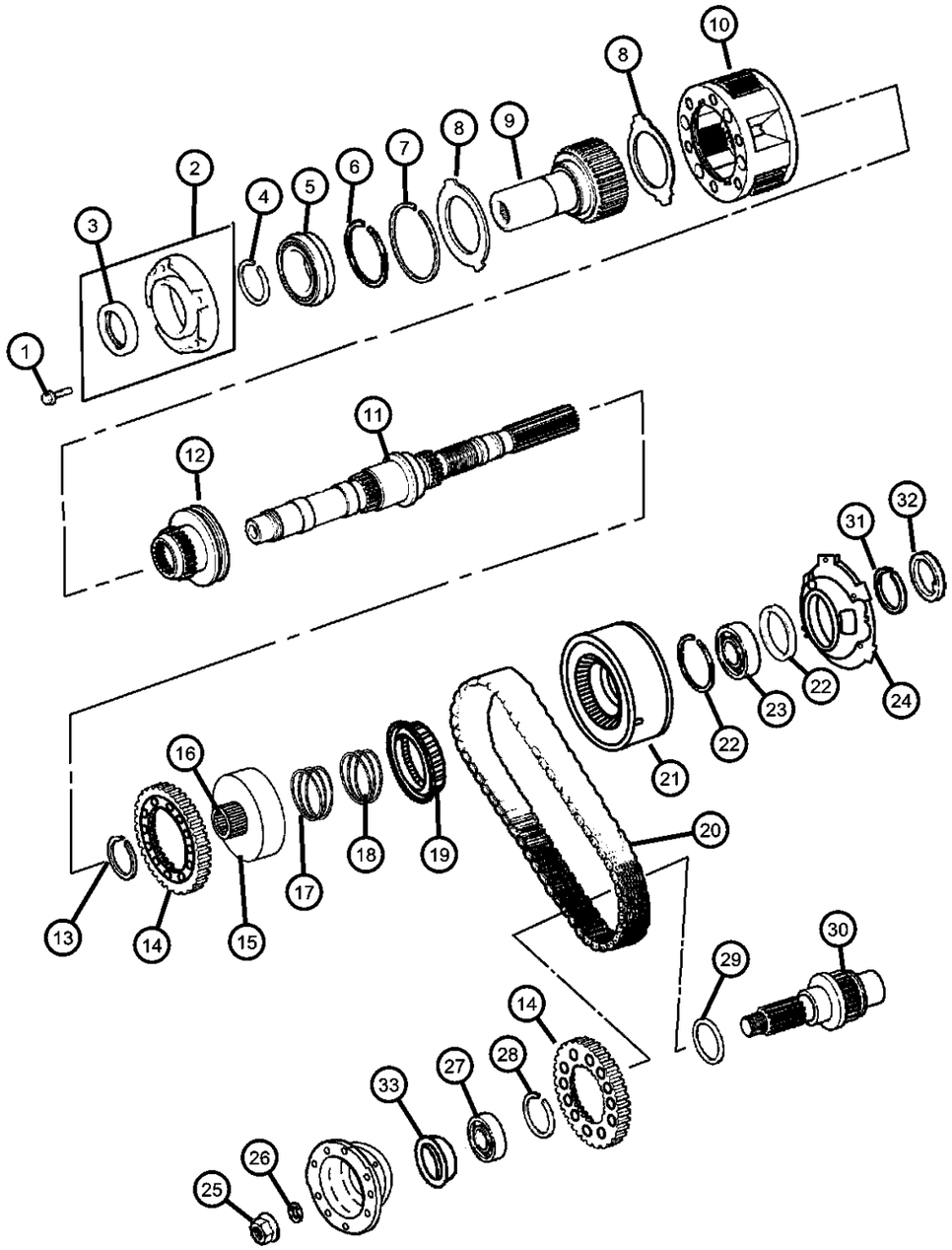

ITEM	PART NUMBER	QTY	LINE	SERIES	BODY	ENGINE	TRANS	TRIM	DESCRIPTION
12									SLEEVE, Shift Range
	05012314AA	1	J			ER0			
		1	J			EV0			
13									SNAP RING
	04798130	1	J			ER0			
		1	J			EV0			
14									SPROCKET, Drive
	05012319AA	2	J			ER0			
		2	J			EV0			
15									CARRIER, Sprocket
	05012315AA	1	J			ER0			
		1	J			EV0			
16									BEARING PACKAGE, Transfer Case
	83503543	1	J			ER0			
		1	J			EV0			
17									SPRING, Clutch
	04798131	1	J			ER0			
		1	J			EV0			
18									SPRING, Clutch
	04897521AA	1	J			ER0			
		1	J			EV0			
19									CLUTCH, Oneway
	04897520AA	1	J			ER0			
		1	J			EV0			
20									CHAIN, Transfer Case
	05012322AB	1	J			ER0			
		1	J			EV0			
21									PUMP, Transfer Case Gear Rotor
	05012329AA	1	J			ER0			
		1	J			EV0			
22									SNAP RING
	04446478	2	J			ER0			

GRAND CHEROKEE (WJ)

SERIES	LINE	BODY	ENGINE	TRANSMISSION
H = Laredo M = Sport P = Limited S = Overland	T = JEEP - 2WD J = JEEP - 4WD U = JEEP - 4WD (RHD)	74 = SPORT UTILITY 4-DR	ERH = Engine - 4.0L Power Tech I-6 EVA = Engine- 4.7L V8 MPI EVC = Engine - 4.7L HO V8 MPI ER0 = All 4.0L 6 Cyl. Gas EV0 = All 4.7L Gas	DGK = 4 Speed Auto, 42RE DGQ = 5 Speed Auto, 45RFE DG0 = All Automatic Transmissions

Gear Train Quadra Trac II on Demand [DHF]
Figure 247-410

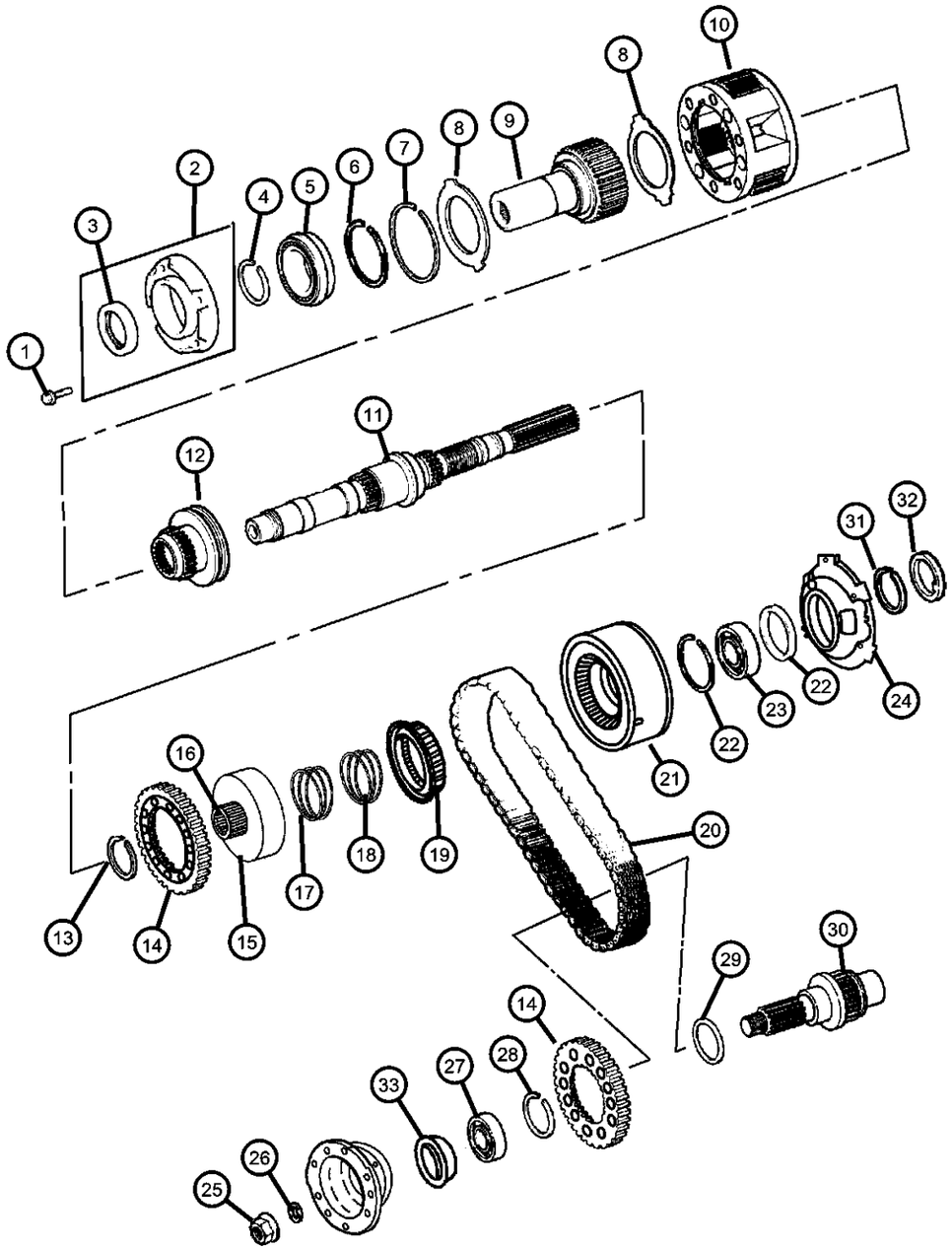

ITEM	PART NUMBER	QTY	LINE	SERIES	BODY	ENGINE	TRANS	TRIM	DESCRIPTION
		2	J			EV0			
23									BEARING, Output Shaft
	04638899	1	J			ER0			
		1	J			EV0			
24									PUMP, Transfer Case Oil
	05013017AB	1	J			ER0			
		1	J			EV0			
25									NUT, Transfer Case Yoke
	04167924	1	J			ER0			
		1	J			EV0			
26									WASHER, Transfer Case Yoke
	04210973	1	J			ER0			
		1	J			EV0			
27									BEARING, Output Shaft
	02466224	1	J			ER0			
		1	J			EV0			
28									SNAP RING
	05012320AA	1	J			EV0			
		2	J			EV0			
29									WASHER
	05013014AA	1	J			ER0			
		1	J			EV0			
30									OUTPUT SHAFT, Transfer Case
	05012321AA	1	J			ER0			
		1	J			EV0			
31									WASHER
	05013014AA	1	J			ER0			
		1	J			EV0			
32									SNAP RING
	04446478	2	J			ER0			
		2	J			EV0			
33									SEAL, Output Shaft

GRAND CHEROKEE (WJ)

SERIES	LINE	BODY	ENGINE	TRANSMISSION
H = Laredo M = Sport P = Limited S = Overland	T = JEEP - 2WD J = JEEP - 4WD U = JEEP - 4WD (RHD)	74 = SPORT UTILITY 4-DR	ERH = Engine - 4.0L Power Tech I-6 EVA = Engine- 4.7L V8 MPI EVC = Engine - 4.7L HO V8 MPI ER0 = All 4.0L 6 Cyl. Gas EV0 = All 4.7L Gas	DGK = 4 Speed Auto, 42RE DGQ = 5 Speed Auto, 45RFE DG0 = All Automatic Transmissions

Gear Train Quadra Trac II on Demand [DHF]
Figure 247-410

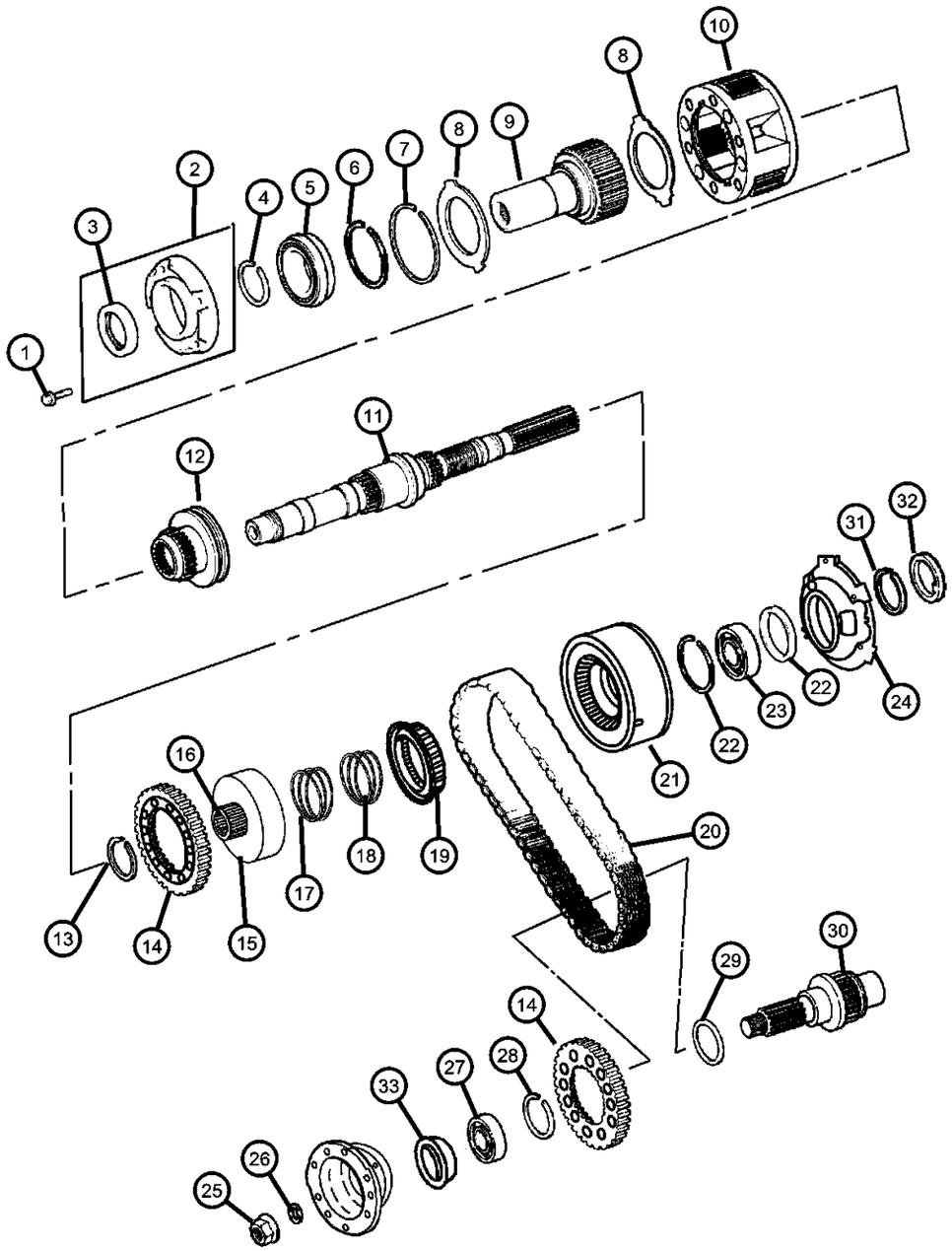

ITEM	PART NUMBER	QTY	LINE	SERIES	BODY	ENGINE	TRANS	TRIM	DESCRIPTION
	04798125	1	J			ER0			
		1	J			EV0			

GRAND CHEROKEE (WJ)

SERIES	LINE	BODY	ENGINE	TRANSMISSION
H = Laredo M = Sport P = Limited S = Overland	T = JEEP - 2WD J = JEEP - 4WD U = JEEP - 4WD (RHD)	74 = SPORT UTILITY 4-DR	ERH = Engine - 4.0L Power Tech I-6 EVA = Engine- 4.7L V8 MPI EVC = Engine - 4.7L HO V8 MPI ER0 = All 4.0L 6 Cyl. Gas EV0 = All 4.7L Gas	DGK = 4 Speed Auto, 42RE DGQ = 5 Speed Auto, 45RFE DG0 = All Automatic Transmissions

Fork and Rails Quadra Trac II on Demand [DHF]
Figure 247-910

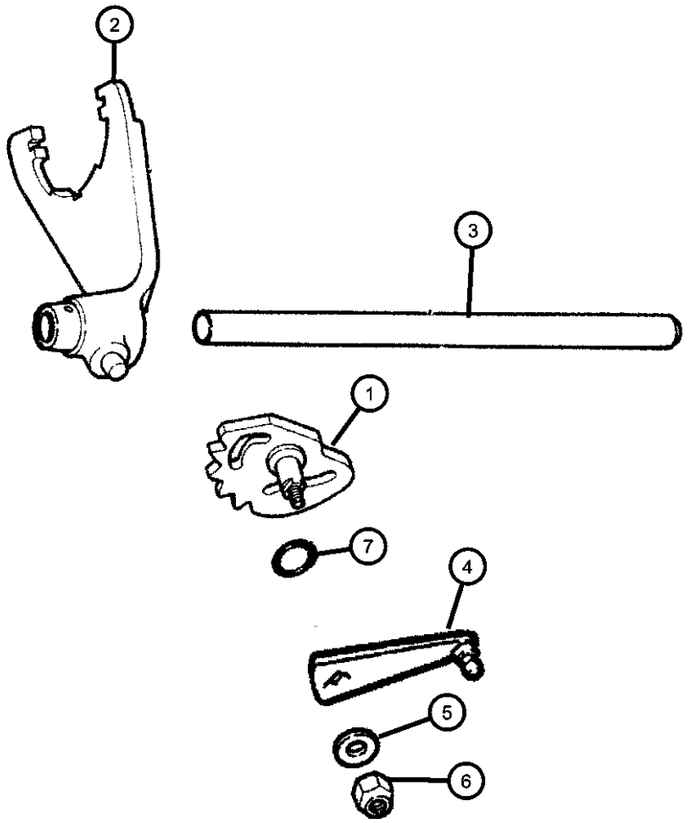

ITEM	PART NUMBER	QTY	LINE	SERIES	BODY	ENGINE	TRANS	TRIM	DESCRIPTION
1									SECTOR, Transfer Case
	05012312AA	1	J			ER0			
		1	J			EV0			
2									FORK, Range
	04798136	1	J			ER0			
		1	J			EV0			
3									RAIL, Transfer Case
	04798135	1	J			ER0			
		1	J			EV0			
4									LEVER, Transfer Case
	05012333AA	1	J			ER0			
		1	J			EV0			
5									WASHER, Flat
	S2436163	1	J			ER0			
		1	J			EV0			
6									NUT
	00152345	1	J			ER0			
		1	J			EV0			
7									SEAL, O-Ring
	04167964	1	J			ER0			
		1	J			EV0			

GRAND CHEROKEE (WJ)

SERIES	LINE	BODY	ENGINE	TRANSMISSION
H = Laredo M = Sport P = Limited S = Overland	T = JEEP - 2WD J = JEEP - 4WD U = JEEP - 4WD (RHD)	74 = SPORT UTILITY 4-DR	ERH = Engine - 4.0L Power Tech I-6 EVA = Engine- 4.7L V8 MPI EVC = Engine - 4.7L HO V8 MPI ER0 = All 4.0L 6 Cyl. Gas EV0 = All 4.7L Gas	DGK = 4 Speed Auto, 42RE DGQ = 5 Speed Auto, 45RFE DG0 = All Automatic Transmissions

Gearshift Controls Quadra Trac II on Demand [DHF]
Figure 247-1210

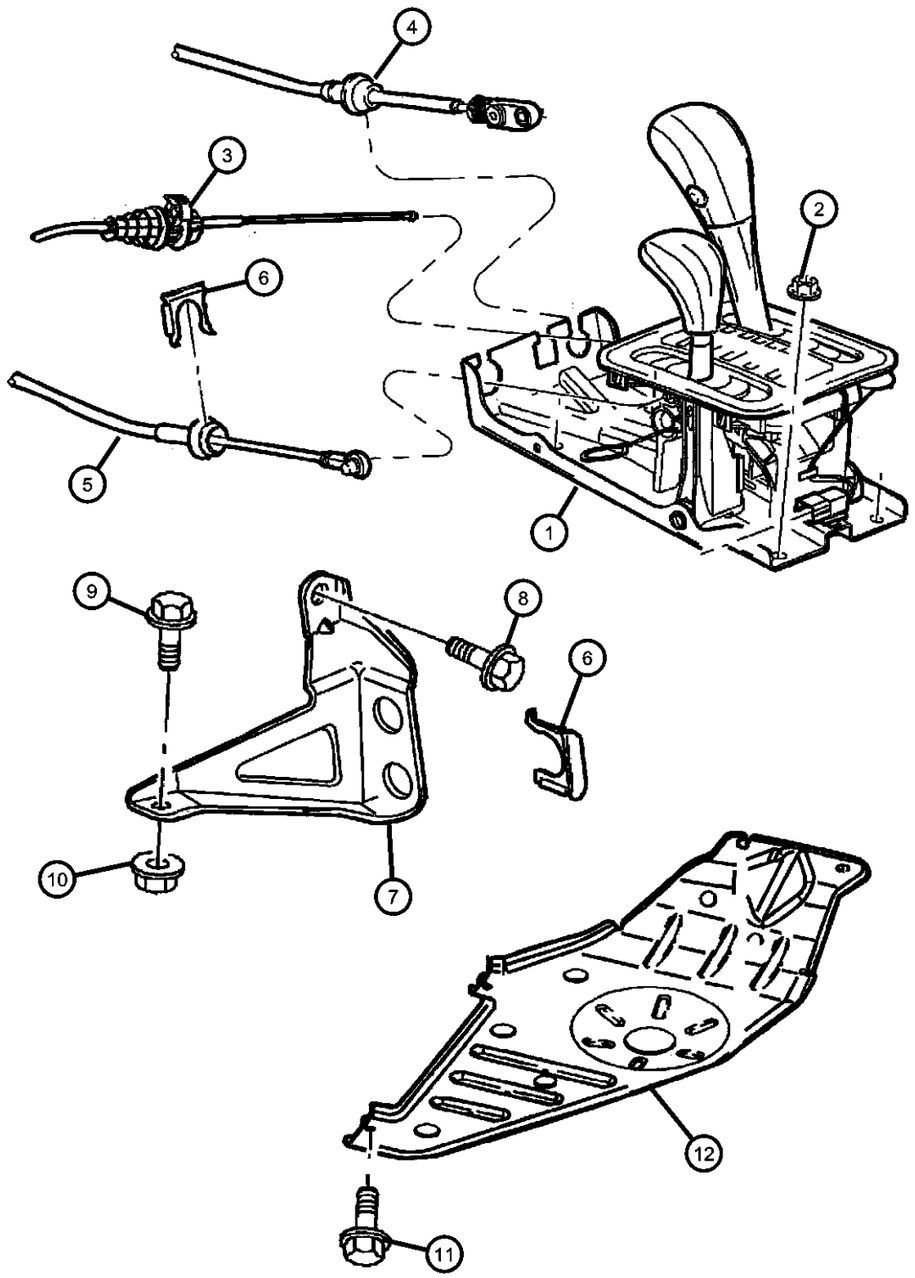

ITEM	PART NUMBER	QTY	LINE	SERIES	BODY	ENGINE	TRANS	TRIM	DESCRIPTION
NOTES: Sales Codes [DGK] = 42RE 4 Speed Automatic Transmissions [DGQ] = 45RFE 5 Speed Automatic Transmissions [DG0] = All Automatic Transmissions [ER0] = All 4.0L Gas Engines [EVC] = 4..7L Power Tech Ho [EV0] = All 4.7L Gas Engines									
1									HOUSING AND LEVER, Shifter
	52109672AB	1	J			ER0, EV0	DGK, DGQ		With [DHF] Without [DSB]
		1	J			ER0, EV0	DGK, DGQ		With [DHQ] Without [DSB]
	52109673AB	1	J			ER0, EV0, EVC	DGK, DGQ		With [DHF] And [DSB]
		1	J			ER0, EV0, EVC	DGK, DGQ		With [DHQ] And [DSB]
2	06101695	4							NUT, Hex Flange Lock, M8x1.25
3	52109606AA	1					DG0		CABLE, Park Interlock
4	52104060AC	1					DG0		CABLE, Gearshift Control
5	52104218AB	1	J				DG0		CABLE, Gearshift Control
6	04269830	2	J						CLIP, Cable
7									BRACKET, Torque Shaft
	52104219	1	J				DGK		
	52104220AB	1	J				DGQ		
8	06503119	4							SCREW AND WASHER, Hex Head, M10x1.5x40
9	06101054	1	J				DGK		BOLT AND WASHER, Hex Head, M10x1.5x40
10	06503231	1	J				DGK		NUT, Brake Line
11	06503571	4							SCREW AND WASHER, M10x1.50x35
12	52058922	1	J						SKID PLATE, Transfer Case

GRAND CHEROKEE (WJ)

SERIES	LINE	BODY	ENGINE	TRANSMISSION
H = Laredo M = Sport P = Limited S = Overland	T = JEEP - 2WD J = JEEP - 4WD U = JEEP - 4WD (RHD)	74 = SPORT UTILITY 4-DR	ERH = Engine - 4.0L Power Tech I-6 EVA = Engine- 4.7L V8 MPI EVC = Engine - 4.7L HO V8 MPI ER0 = All 4.0L 6 Cyl. Gas EV0 = All 4.7L Gas	DGK = 4 Speed Auto, 42RE DGQ = 5 Speed Auto, 45RFE DG0 = All Automatic Transmissions

Group - 22

Wheels, Covers and Jacks

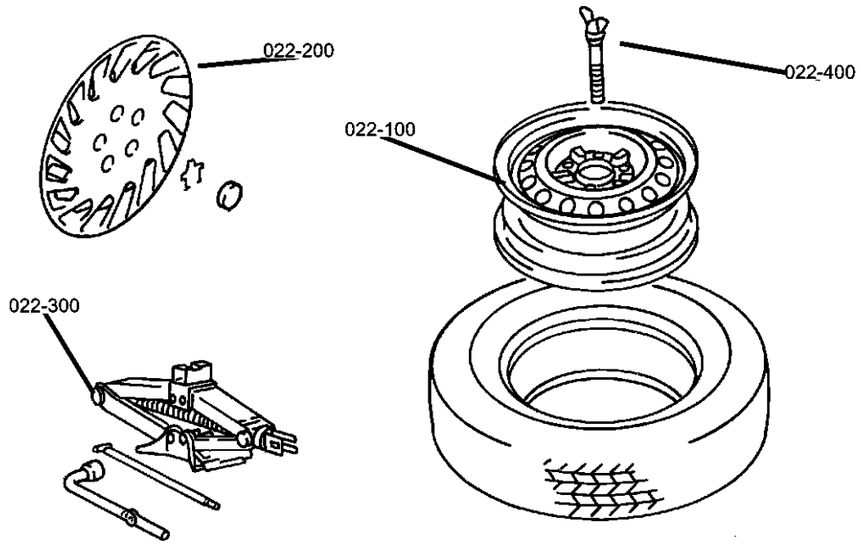

022-100 Wheels and Hardware	022-200 Wheel Covers and Center Caps	022-300 Jack Stowage	022-400 Spare Tire Stowage
	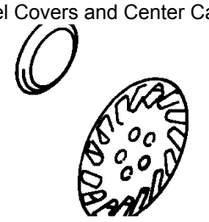	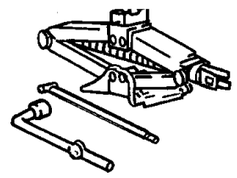	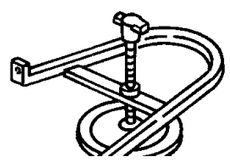

Group - 22 Wheels, Covers and Jacks

Illustration Title — Group-Fig. No.

Wheels and Hardware
Wheels and Hardware ..... Fig. 22 - 130

Wheel Covers and Center Caps
Caps, Wheel Cover and center ..... Fig. 22 - 230

Jack Stowage
Jack Stowage ..... Fig. 22 - 330

Spare Tire Stowage
Spare Wheel Stowage ..... Fig. 22 - 460

Wheels and Hardware
Figure 22-130

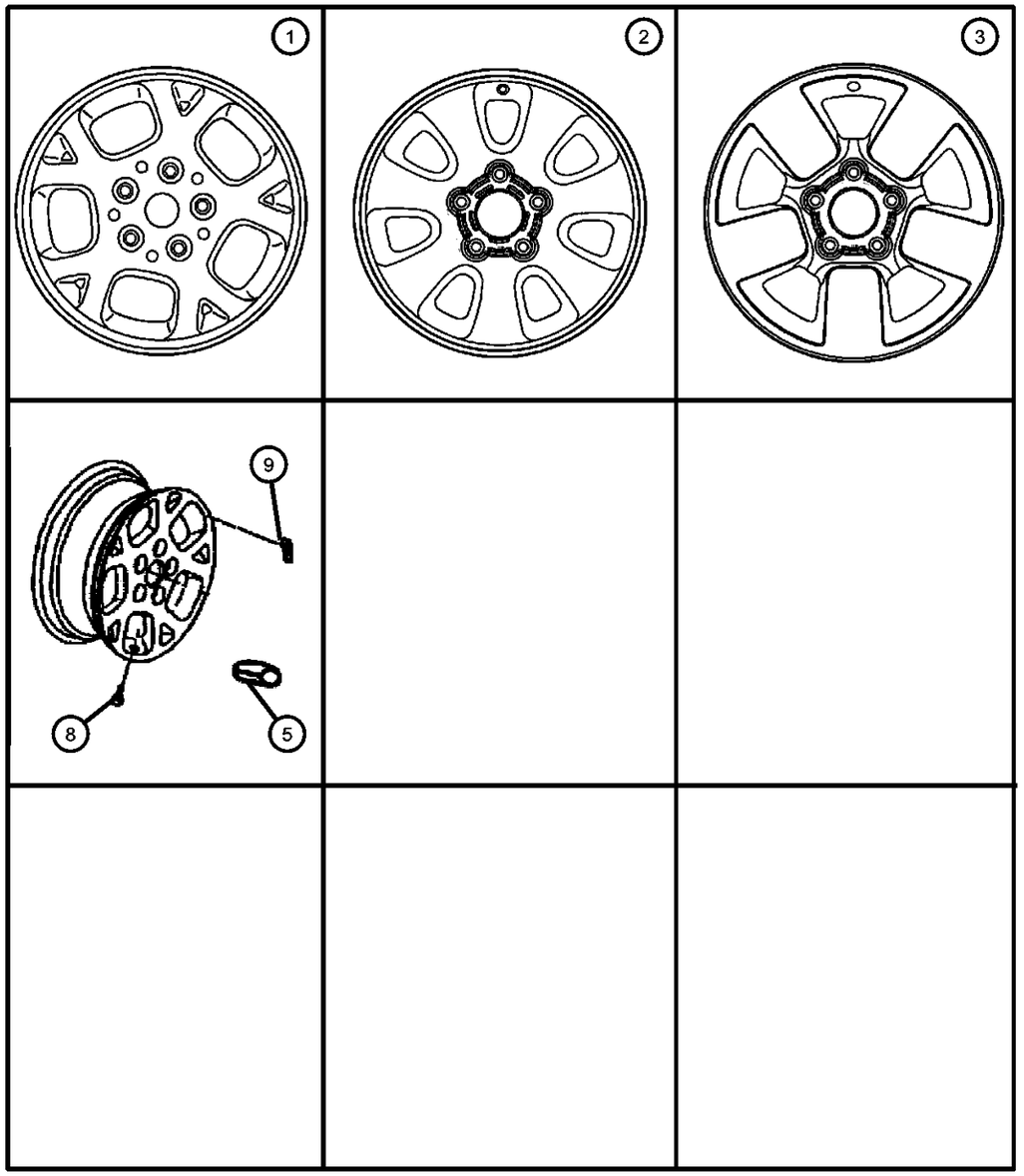

ITEM	PART NUMBER	QTY	LINE	SERIES	BODY	ENGINE	TRANS	TRIM	DESCRIPTION
									Note: Sales Code WDR,WDS = 16x7.0 Aluminum Wheel
									Note: Sales Code WGP = 17x7.5 Cast Aluminum
									Note: Sales Code WFZ = 17 x 7.5 Aluminum, 7 Spoke
1	5EZ98TAEAB	4							WHEEL, Aluminum, 16x7, [WDS]
2	5HE38PAKAA	4							WHEEL, Aluminum, 17x7.5, [WGP]
3	5HU03MA8AA	4							WHEEL, Aluminum, 17x7.5, [WFZ]
-4									WHEEL, Aluminum
	52080260AA	4							17x7.5, [WGM]
	5EZ99PAKAC	4							16x7, [WDR]
5	06036310AA	20							NUT, Wheel, .50x20
-6	52088203AB	1							WHEEL, Spare
-7	52088446	1							WHEEL, Steel, [WDQ]
8	02073355	5							STEM, Wheel Valve
9	02073355	5							WEIGHT, Wheel Balance Tape, (NOT SERVICED)
-10	52088990AC	5							SENSOR, Tire Pressure, Valve stem
-11	52109664AA	1							MAGNET
-12	52088961AA	5							NUT
-13	05083124AA	5							CAP, Valve Stem, Chrome
-14	05083123AA	5							O RING

GRAND CHEROKEE (WJ)

SERIES	LINE	BODY	ENGINE	TRANSMISSION
H = Laredo	T = JEEP - 2WD	74 = SPORT UTILITY 4-DR	ERH = Engine - 4.0L Power Tech I-6	DGK = 4 Speed Auto, 42RE
M = Sport	J = JEEP - 4WD		EVA = Engine- 4.7L V8 MPI	DGQ = 5 Speed Auto, 45RFE
P = Limited	U = JEEP - 4WD (RHD)		EVC = Engine - 4.7L HO V8 MPI	DG0 = All Automatic Transmissions
S = Overland			ER0 = All 4.0L 6 Cyl. Gas	
			EV0 = All 4.7L Gas	

Caps, Wheel Cover and center
Figure 22-230

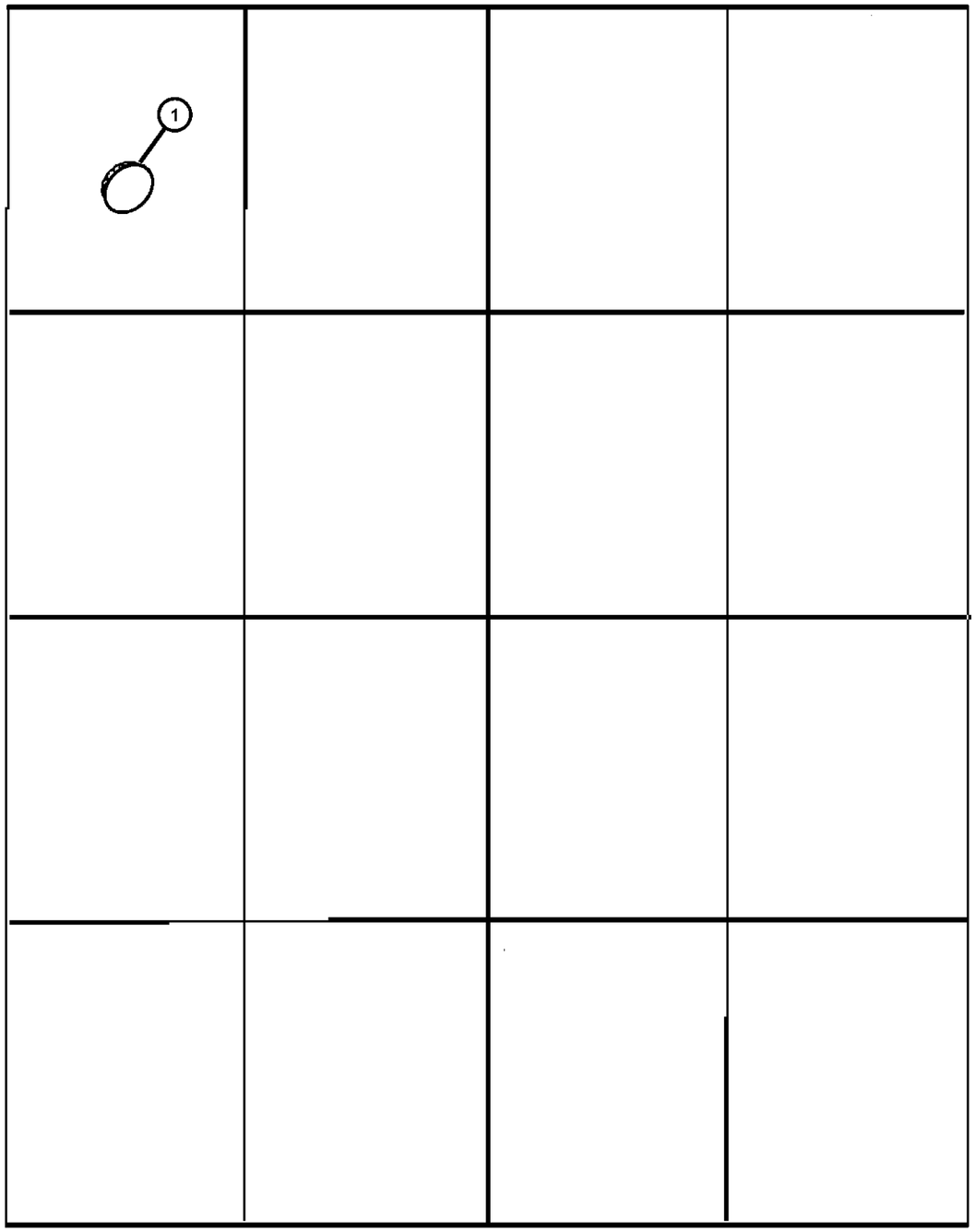

ITEM	PART NUMBER	QTY	LINE	SERIES	BODY	ENGINE	TRANS	TRIM	DESCRIPTION
Note:									
WFZ = 17 x 7.5 Aluminum									
WGP = 17 x 7.5 Aluminum									
WDR = 16 x 7.0 Aluminum									
WGM = 17 x 7.5 Aluminum									
WDS = 16 x 7.0 Aluminum									
1	5CF97L3X	4							CAP, Wheel Center, Brushed Aluminum "Jeep" Name, [WDR], Up To 8-16-01
-2									CAP, Wheel Center
	52059522AA	4							[WDR,WDS], After 8-16-01
	52080263AA	4							[WGM]
	5HF45PAKAA	4							[WGP]
	5HF52MA8AA	4							[WFZ]

GRAND CHEROKEE (WJ)

SERIES	LINE	BODY	ENGINE	TRANSMISSION
H = Laredo	T = JEEP - 2WD	74 = SPORT UTILITY 4-DR	ERH = Engine - 4.0L Power Tech I-6	DGK = 4 Speed Auto, 42RE
M = Sport	J = JEEP - 4WD		EVA = Engine- 4.7L V8 MPI	DGQ = 5 Speed Auto, 45RFE
P = Limited	U = JEEP - 4WD (RHD)		EVC = Engine - 4.7L HO V8 MPI	DG0 = All Automatic Transmissions
S = Overland			ER0 = All 4.0L 6 Cyl. Gas	
			EV0 = All 4.7L Gas	

Jack Stowage
Figure 22-330

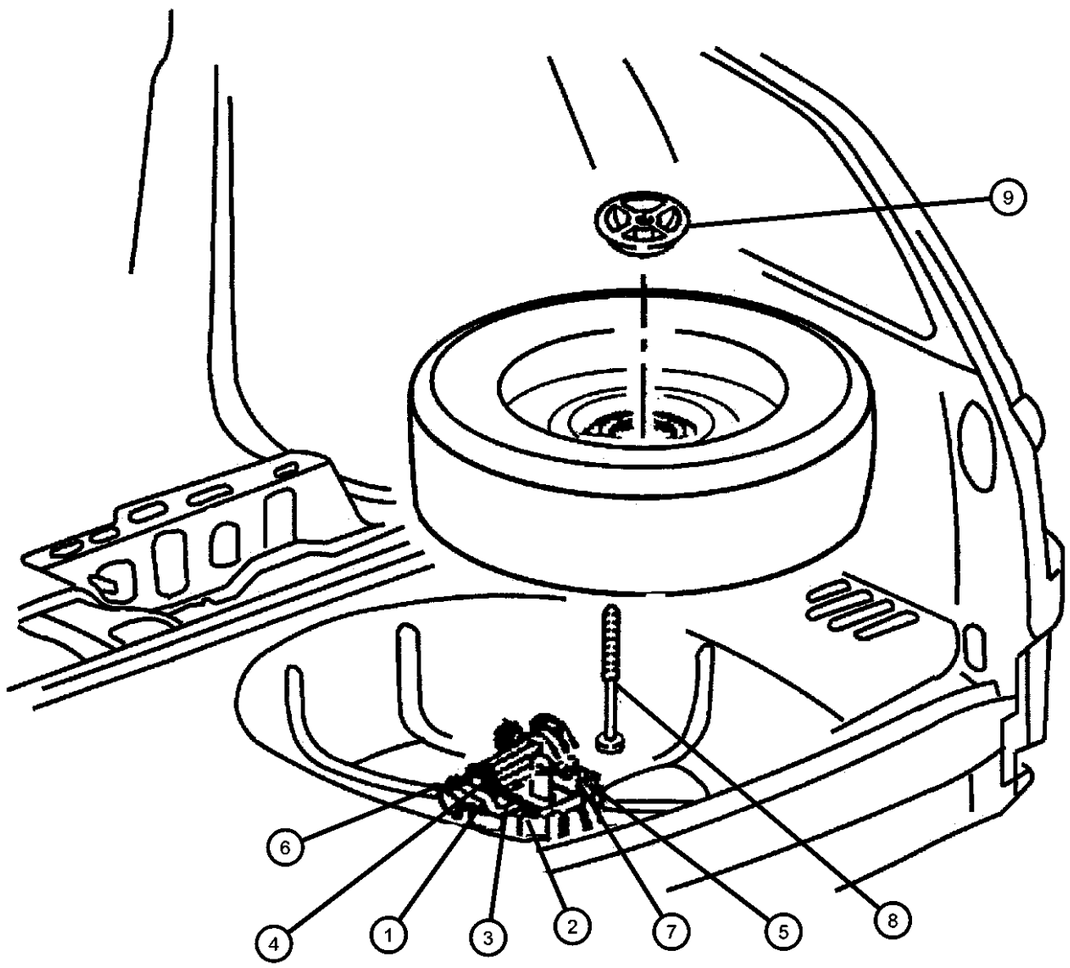

ITEM	PART NUMBER	QTY	LINE	SERIES	BODY	ENGINE	TRANS	TRIM	DESCRIPTION
1	52059104	1							JACK
2	52059122AB	1							EXTENSION, Jack Handle
3	52059121	1							EXTENSION, Jack Handle, [RCE]
4	52059134AA	2							BRACKET, Tool Hold Down
5	06100048	4							NUT, Hex, M6x1.00
6	52059105	1							WRENCH, Wheel Lug Nut
7	52059148AA	1							CLIP
8	52059148AA	1							J BOLT, Spare Tire Hold Down, (NOT SERVICED)
9	52059414AB	1							CUP, Spare Tire Retention

GRAND CHEROKEE (WJ)

SERIES	LINE	BODY	ENGINE	TRANSMISSION
H = Laredo M = Sport P = Limited S = Overland	T = JEEP - 2WD J = JEEP - 4WD U = JEEP - 4WD (RHD)	74 = SPORT UTILITY 4-DR	ERH = Engine - 4.0L Power Tech I-6 EVA = Engine- 4.7L V8 MPI EVC = Engine - 4.7L HO V8 MPI ER0 = All 4.0L 6 Cyl. Gas EV0 = All 4.7L Gas	DGK = 4 Speed Auto, 42RE DGQ = 5 Speed Auto, 45RFE DG0 = All Automatic Transmissions

Spare Wheel Stowage
Figure 22-460

ITEM	PART NUMBER	QTY	LINE	SERIES	BODY	ENGINE	TRANS	TRIM	DESCRIPTION
1	52059169AB	1							BOLT, J, M10x1.5x150
2	52059414AB	1							CUP, Spare Tire Retention
3	06503070	1							WINGNUT, Jack and Tire Hold Down

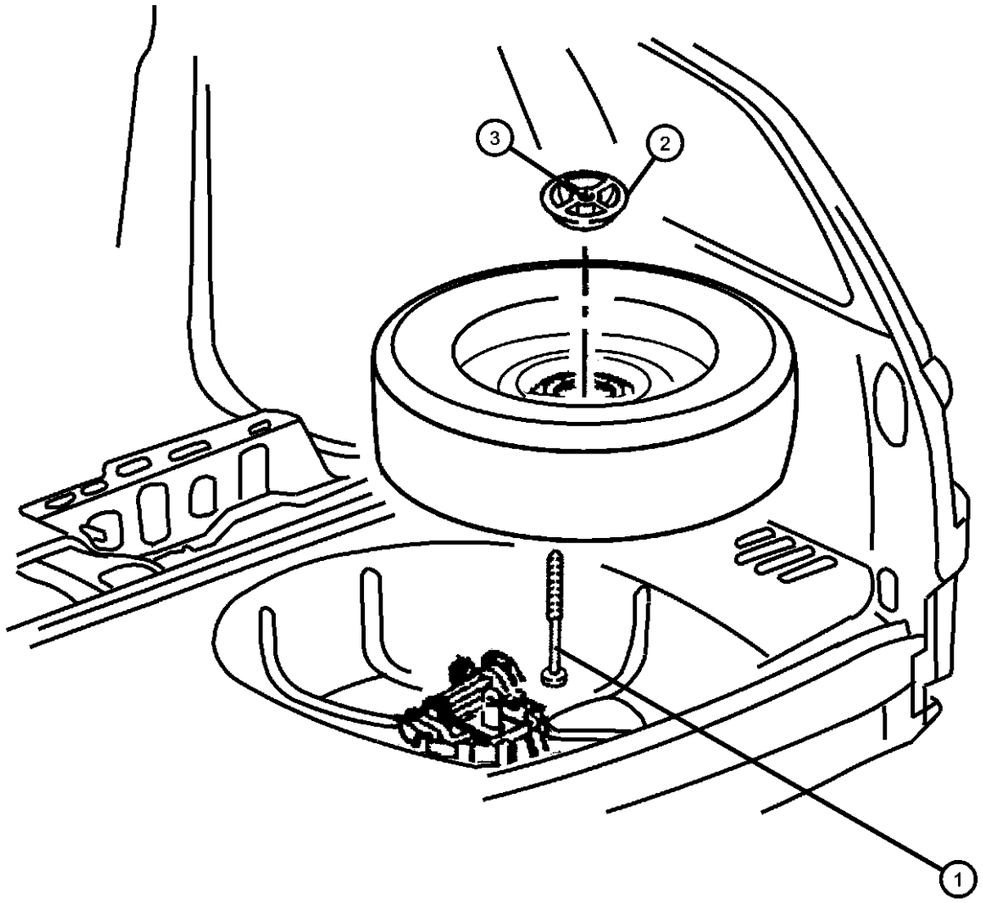

GRAND CHEROKEE (WJ)

SERIES	LINE	BODY	ENGINE	TRANSMISSION
H = Laredo M = Sport P = Limited S = Overland	T = JEEP - 2WD J = JEEP - 4WD U = JEEP - 4WD (RHD)	74 = SPORT UTILITY 4-DR	ERH = Engine - 4.0L Power Tech I-6 EVA = Engine- 4.7L V8 MPI EVC = Engine - 4.7L HO V8 MPI ER0 = All 4.0L 6 Cyl. Gas EV0 = All 4.7L Gas	DGK = 4 Speed Auto, 42RE DGQ = 5 Speed Auto, 45RFE DG0 = All Automatic Transmissions

Group - 23D

Wiper/Lock Cylinder and Keys

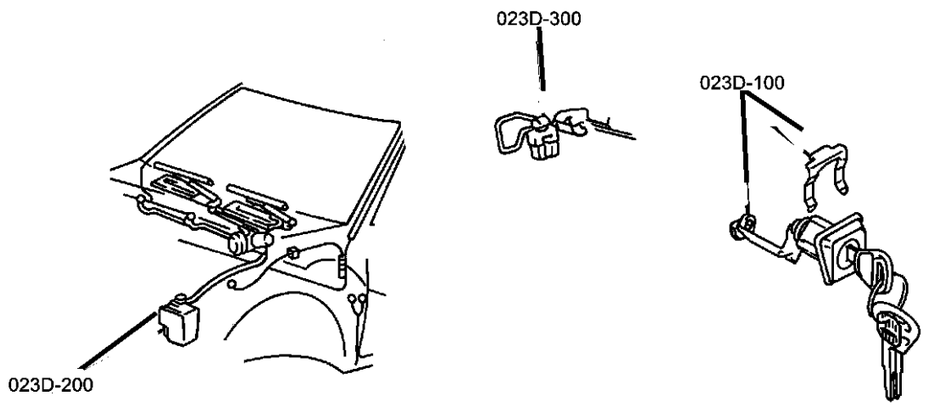

23D-100 Lock Cylinders and Keys	23D-200 Windshield Wiper and Washer Systems	23D-300 Rear Wiper and Washer System	
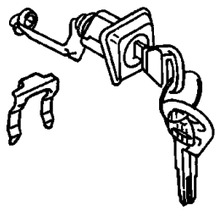	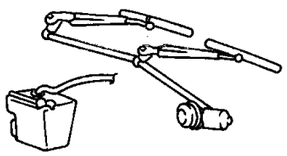	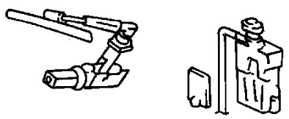	

Group - 23D Wiper/Lock Cylinder and Keys

Illustration Title — Group-Fig. No.

Lock Cylinders and Keys
Lock Cylinder & Keys ..... Fig. 23D - 130

Windshield Wiper and Washer Systems
Windshield Wiper & Washer ..... Fig. 23D - 230

Rear Wiper and Washer System
Rear Wiper & Washer System ..... Fig. 23D - 330

Lock Cylinder & Keys
Figure 23D-130

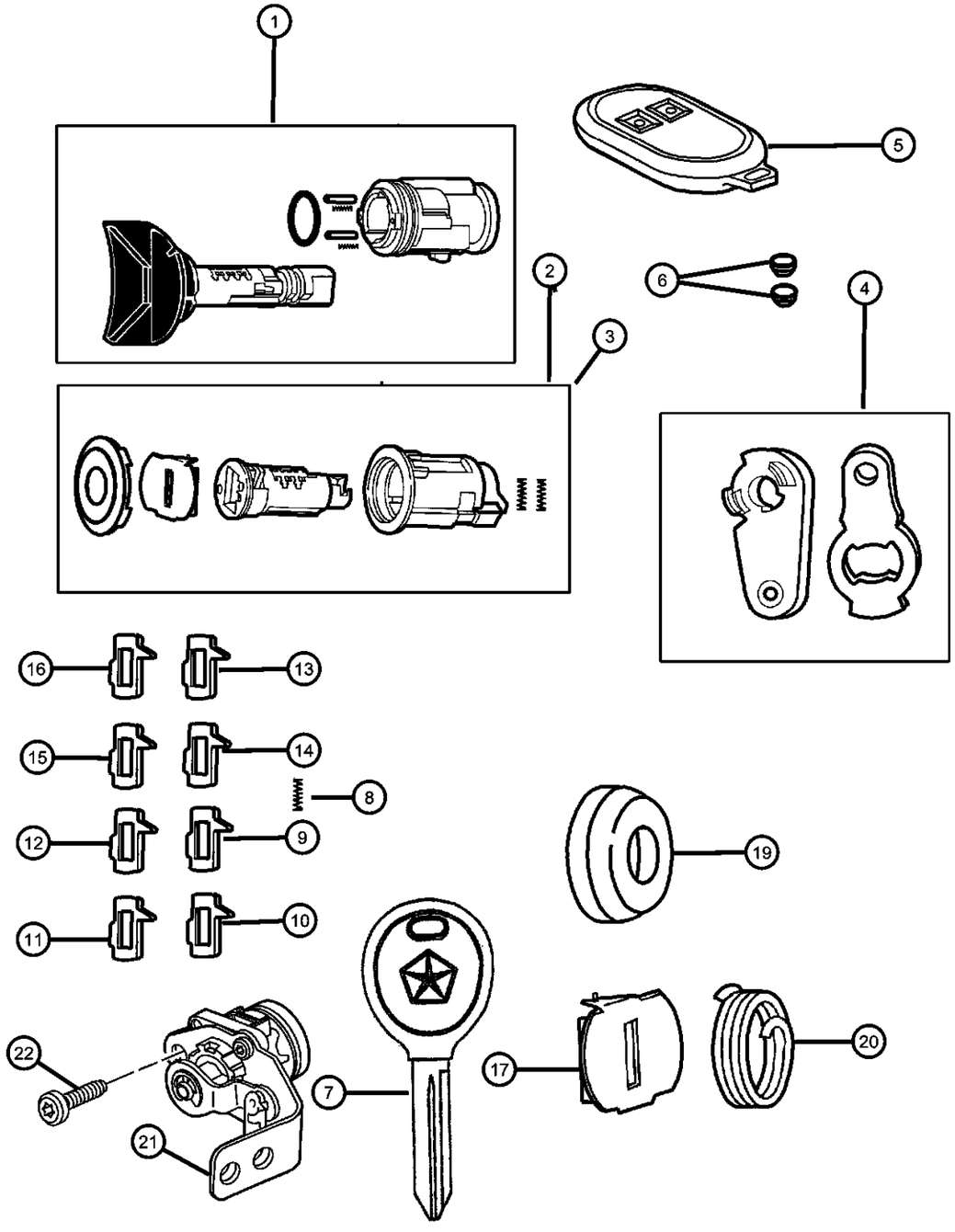

ITEM	PART NUMBER	QTY	LINE	SERIES	BODY	ENGINE	TRANS	TRIM	DESCRIPTION
1	05003843AB	1							CYLINDER, Ignition Lock
2	05013682AA	1							CYLINDER, Door Lock
3									LOCK CYLINDER
	04778125	1	T						
		1	J						
4	55136554AA	1							LEVER, Door Lock Cylinder
5									TRANSMITTER, Keyless Entry
	56036859AD	1							Frequency 315 (#1) Primary Driver, Black
	56036860AD	1							Frequency 315 (#2) Secondary Driver -grey,
6	83504802	1							BATTERY, Transmitter
7	05018699AA	2							KEY, Master, Sentry Key
8	05010883AB	1							SPRING, Ignition Tumbler, Sidebar
9	04778117	1							TUMBLER, Door and Deck Number 1, Wide
10	04778118	1							TUMBLER, Door and Deck Number 2, Wide
11	04778119	1							TUMBLER, Door and Deck Number 3, Wide
12	04778120	1							TUMBLER, Door and Deck Number 4, Wide
13	05010879AA	1							TUMBLER, Ignition Number 1, Sidebar
14	05010880AA	1							TUMBLER, Ignition Number 2, Sidebar
15	05010881AA	1							TUMBLER, Ignition Number 3, Sidebar
16	05010882AA	1							TUMBLER, Ignition Number 4, Sidebar
17	04778150	1							SHUTTER, Door, Deck and Liftgate, Bright
-18	05019605AA	1							SHUTTER, Lock Cylinder
19	04778149	1							CAP, Door Lock Cylinder, Bright
20	04778121	1							SPRING, Door and Deck Tumbler
21	55136763AA	1							BRACKET, Security
22	05013808AA	1							SCREW, Security Bracket Mounting
-23	04658444	1							CLIP, Latch, Purple
-24	55136557AA	1							SWITCH, Security Alarm

GRAND CHEROKEE (WJ)

SERIES	LINE	BODY	ENGINE	TRANSMISSION
H = Laredo M = Sport P = Limited S = Overland	T = JEEP - 2WD J = JEEP - 4WD U = JEEP - 4WD (RHD)	74 = SPORT UTILITY 4-DR	ERH = Engine - 4.0L Power Tech I-6 EVA = Engine- 4.7L V8 MPI EVC = Engine - 4.7L HO V8 MPI ER0 = All 4.0L 6 Cyl. Gas EV0 = All 4.7L Gas	DGK = 4 Speed Auto, 42RE DGQ = 5 Speed Auto, 45RFE DG0 = All Automatic Transmissions

AR = use ase required - = Non illustrrated part

Lock Cylinder & Keys
Figure 23D-130

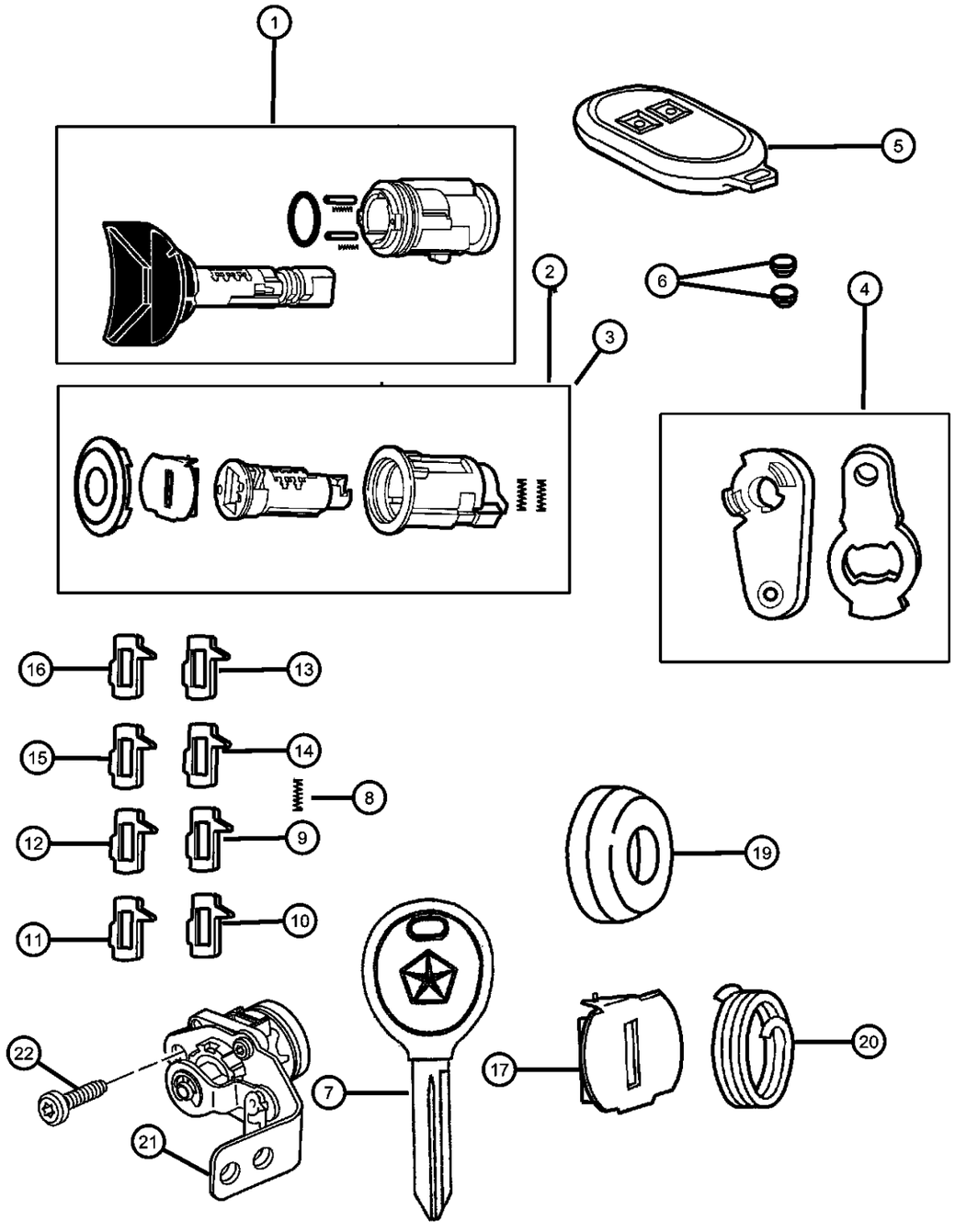

ITEM	PART NUMBER	QTY	LINE	SERIES	BODY	ENGINE	TRANS	TRIM	DESCRIPTION
-25	04686665AB	1							MODULE, Immobilizer
-26									SPRING, Cylinder Return
	04378793	1	T						
		1	J						
-27	05093541AA	1							CLIP, Latch Rod, Pink

GRAND CHEROKEE (WJ)

SERIES	LINE	BODY	ENGINE	TRANSMISSION
H = Laredo	T = JEEP - 2WD	74 = SPORT UTILITY 4-DR	ERH = Engine - 4.0L Power Tech I-6	DGK = 4 Speed Auto, 42RE
M = Sport	J = JEEP - 4WD		EVA = Engine- 4.7L V8 MPI	DGQ = 5 Speed Auto, 45RFE
P = Limited	U = JEEP - 4WD (RHD)		EVC = Engine - 4.7L HO V8 MPI	DG0 = All Automatic Transmissions
S = Overland			ER0 = All 4.0L 6 Cyl. Gas	
			EV0 = All 4.7L Gas	

Windshield Wiper & Washer
Figure 23D-230

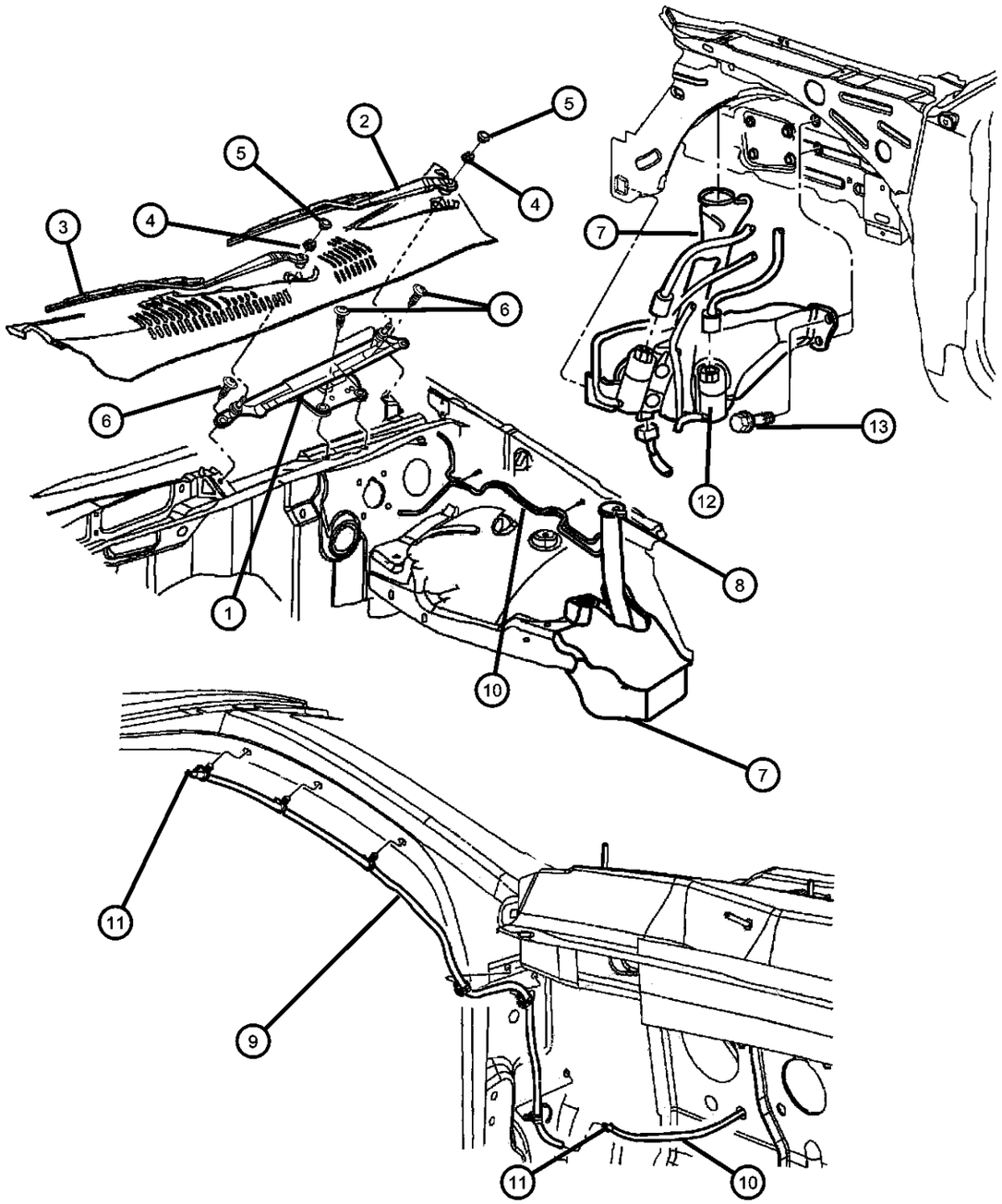

ITEM	PART NUMBER	QTY	LINE	SERIES	BODY	ENGINE	TRANS	TRIM	DESCRIPTION
Notes:									
[ER0]=4.0L Engine									
[EV0]=4.7L Engine									
1	55155092AD	1							MODULE, Wiper, Wiper Motor Included
2									ARM, Wiper
	05012605AA	1							Left
	05012606AA	1							Right
3	05012611AB	1							BLADE, Wiper, (Qty.2)
	WBFLAT07AA								Mopar Alternative Flat Blade Set
	WBW00021AD								Mopar Alternative Winter Wiper Blades
	WB000021AE								Mopar V-Line Alternative Part
4	06503335	2							NUT, Hex, M10X1.25
5	55155765AA	2							CAP, Wiper Arm Nut
6	06100568	4							BOLT AND WASHER, Implement Attaching
7	05069421AA	1							RESERVOIR, Washer
8	05012603AA	1							CAP, Washer Reservoir
9	55155522AD	1							HOSE, Windshield Washer
10	04439003	1							HOSE, Windshield Washer, 0156 ID=4MM
11	04778224	1							CONNECTOR, Washer Hose, In Line
12	55077301AB	1							PUMP, Washer, Windshield
13	55077301AB	1							SCREW, .250-14x.875, (NOT SERVICED)
-14	55155199	2							NOZZLE, Washer, Windshield
-15	04882797	1							SENSOR, Washer Fluid Level
-16	05013755AA	1							GROMMET, Washer Reservoir, Sensor Grommet
-17	05011809AA	1							GROMMET, Windshield Washer Pump, Pump Grommet
-18	03799520	1							GROMMET, Hose to Reservoir
-19	55155694AB	1							HOSE, Washer Reservoir, Windshield Washer Tee Serviced in this Assembly
-20	04805409AA	1							CLIP, Washer Hose

GRAND CHEROKEE (WJ)

SERIES	LINE	BODY	ENGINE	TRANSMISSION
H = Laredo	T = JEEP - 2WD	74 = SPORT UTILITY 4-DR	ERH = Engine - 4.0L Power Tech I-6	DGK = 4 Speed Auto, 42RE
M = Sport	J = JEEP - 4WD		EVA = Engine- 4.7L V8 MPI	DGQ = 5 Speed Auto, 45RFE
P = Limited	U = JEEP - 4WD (RHD)		EVC = Engine - 4.7L HO V8 MPI	DG0 = All Automatic Transmissions
S = Overland			ER0 = All 4.0L 6 Cyl. Gas	
			EV0 = All 4.7L Gas	

Windshield Wiper & Washer
Figure 23D-230

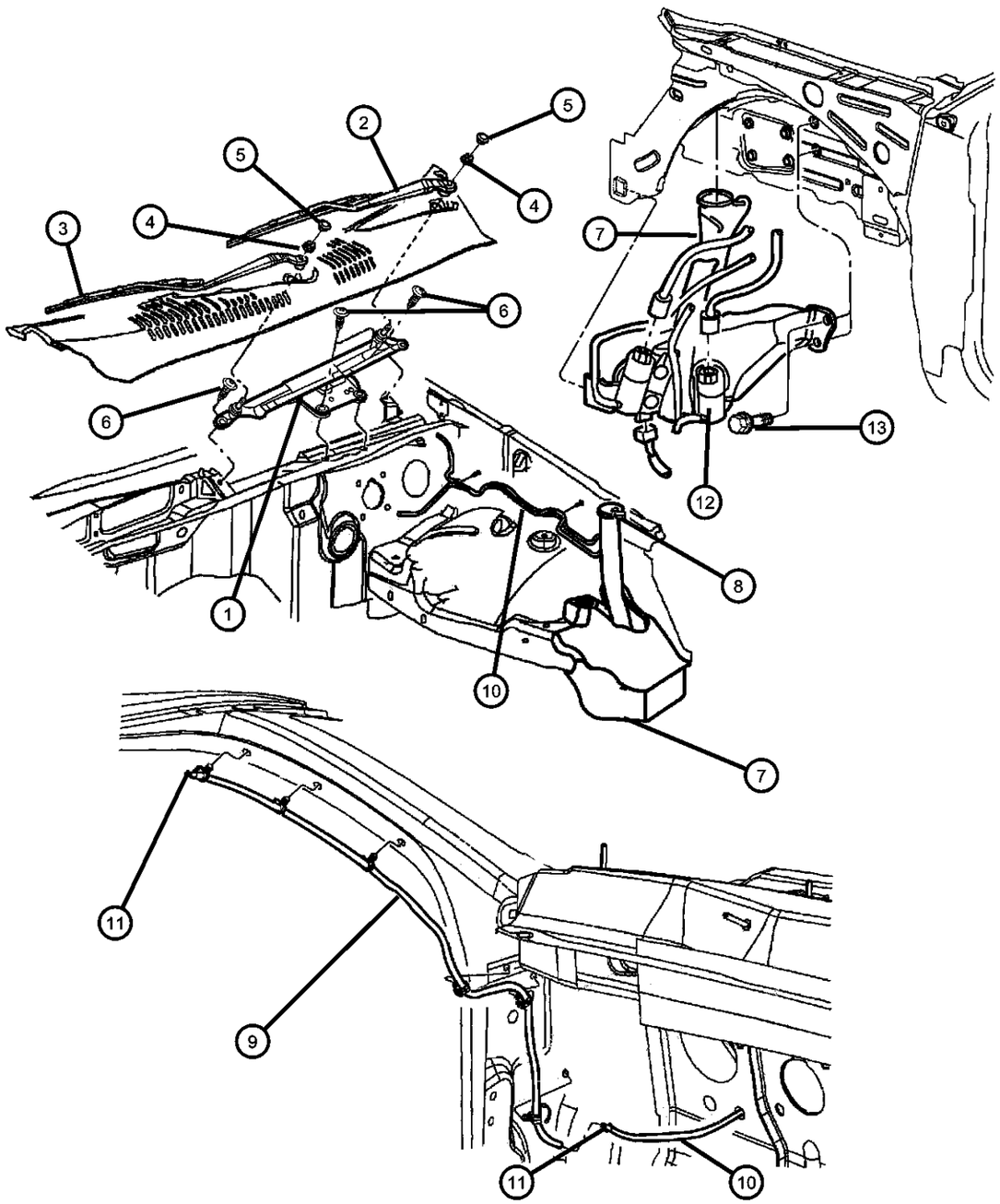

ITEM	PART NUMBER	QTY	LINE	SERIES	BODY	ENGINE	TRANS	TRIM	DESCRIPTION
-21	HWV00532AB	1							HOSE 1FT, Windshield Washer, 5/32"
-22	HWV00764AB	1							HOSE 1FT, Windshield Washer, 7/64"

GRAND CHEROKEE (WJ)

SERIES	LINE	BODY	ENGINE	TRANSMISSION
H = Laredo	T = JEEP - 2WD	74 = SPORT UTILITY 4-DR	ERH = Engine - 4.0L Power Tech I-6	DGK = 4 Speed Auto, 42RE
M = Sport	J = JEEP - 4WD		EVA = Engine- 4.7L V8 MPI	DGQ = 5 Speed Auto, 45RFE
P = Limited	U = JEEP - 4WD (RHD)		EVC = Engine - 4.7L HO V8 MPI	DG0 = All Automatic Transmissions
S = Overland			ER0 = All 4.0L 6 Cyl. Gas	
			EV0 = All 4.7L Gas	

Rear Wiper & Washer System
Figure 23D-330

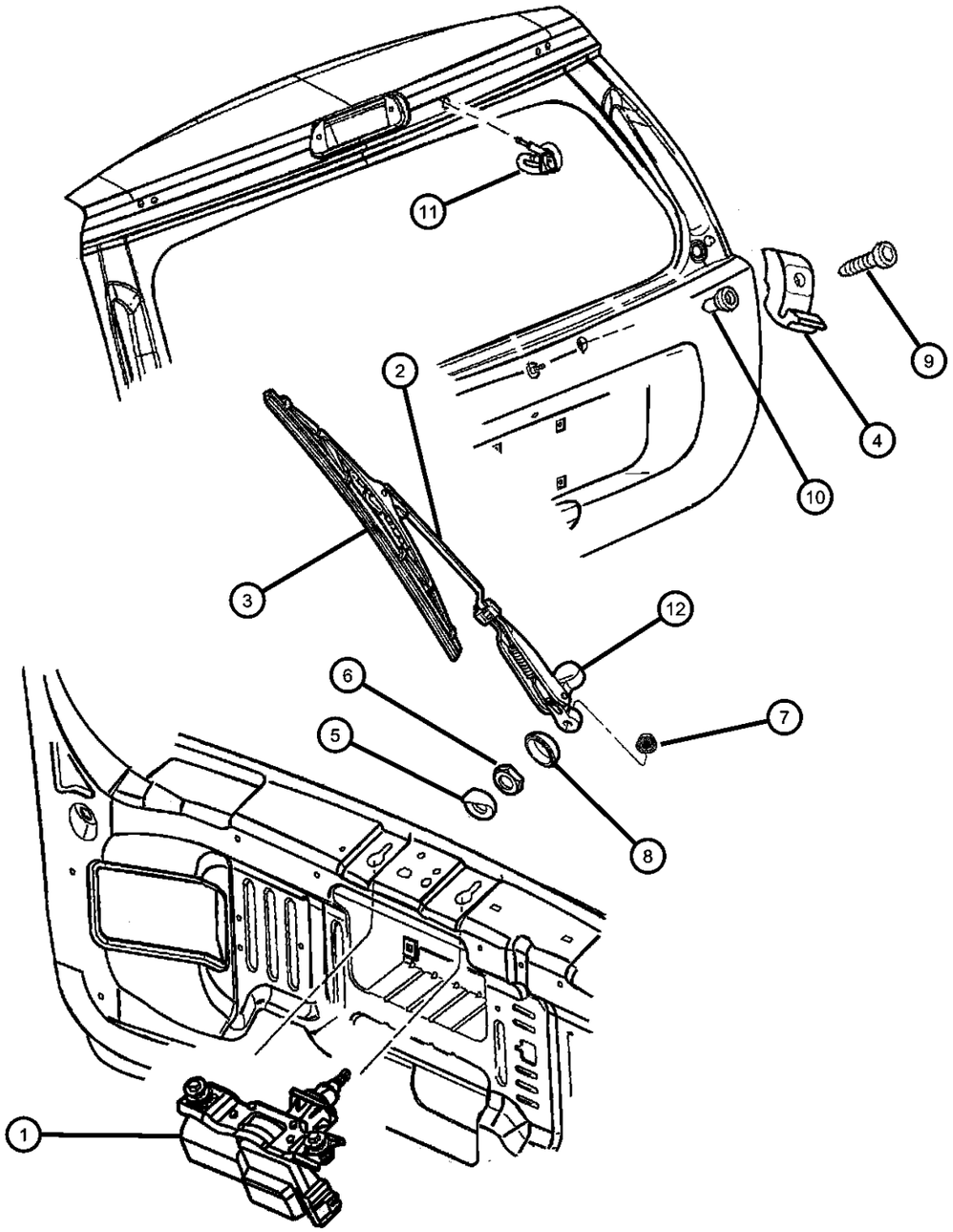

ITEM	PART NUMBER	QTY	LINE	SERIES	BODY	ENGINE	TRANS	TRIM	DESCRIPTION
1	55155122AG	1							MOTOR, Wiper
	R5155122AG								Mopar Remanufactured Part
2	05012610AB	1							ARM, Liftgate Wiper
3	05012615AB	1							BLADE, Wiper
	WB000012AE								Mopar V-Line Alternative Part
4	55155124	1							RAMP, Wiper Park
5	55155358	1							BEZEL, Wiper Motor
6	06502263	1							NUT, Hex, M20x1.00
7	06500165	1							NUT, Wiper Arm
8	55076650	1							COVER, Rear Wiper Motor, Nut
9	06505062AA	1							SCREW, Pilot Point
10	06503245	1							RIVET
11	55155201AC	1							NOZZLE, Washer, Windshield
12	05014217AA	1							COVER, Rear Wiper Motor
-13	55077241AB	1							PUMP, Washer, Windshield
-14	04882797	1							SENSOR, Washer Fluid Level
-15	55155524	1							HOSE, Windshield Washer, Rear Window Washers
-16	55155765AA	2							CAP, Wiper Arm Nut

GRAND CHEROKEE (WJ)

SERIES	LINE	BODY	ENGINE	TRANSMISSION
H = Laredo M = Sport P = Limited S = Overland	T = JEEP - 2WD J = JEEP - 4WD U = JEEP - 4WD (RHD)	74 = SPORT UTILITY 4-DR	ERH = Engine - 4.0L Power Tech I-6 EVA = Engine- 4.7L V8 MPI EVC = Engine - 4.7L HO V8 MPI ER0 = All 4.0L 6 Cyl. Gas EV0 = All 4.7L Gas	DGK = 4 Speed Auto, 42RE DGQ = 5 Speed Auto, 45RFE DG0 = All Automatic Transmissions

Group - 24

Air Conditioning & Heater

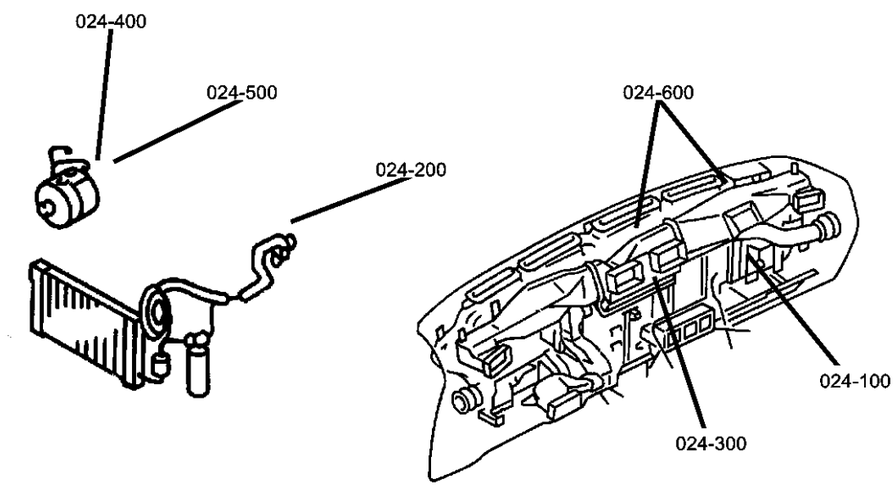

024-100 Air Conditioner and Heater Units 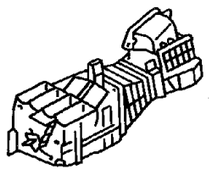	**024-200** Air Conditioner and Heater Plumbing 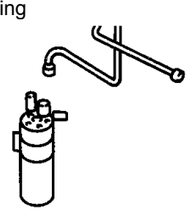	**024-300** Air Conditioner and Heater Controls 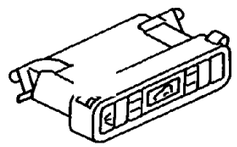	**024-400** Air Conditioning Compressor 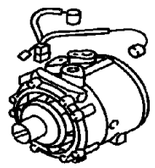
024-500 Air Conditioning Compressor Mounting 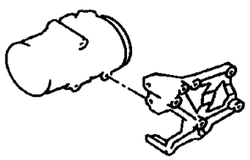	**024-600** Air Ducts and Outlets 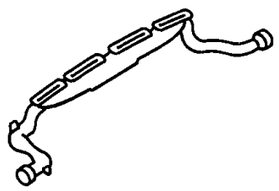		

Group - 24 Air Conditioning & Heater

Illustration Title — Group-Fig. No.

Air Conditioner and Heater Units
HEVAC with Auto Temp Control, LHD ..... Fig. 24 - 150
HEVAC with Manual Control, LHD ..... Fig. 24 - 170

Air Conditioner and Heater Plumbing
Hoses, Heater 4.0L Engine ..... Fig. 24 - 240
Hoses, Heater 4.7L Engine ..... Fig. 24 - 245
Accumulator, Condenser and Lines 4.0L Engines ..... Fig. 24 - 250
Accumulator, Condenser and Lines 4.7L Engine ..... Fig. 24 - 255
Hevac Vacuum Engine Lines and Controls ..... Fig. 24 - 260

Air Conditioner and Heater Controls
Control, Heater and Air Conditioner ..... Fig. 24 - 330

Air Conditioning Compressor
Compressor, Air Conditioning 4.0L Engine ..... Fig. 24 - 410
Compressor, Air Conditioning 4.7L Engine ..... Fig. 24 - 420

Air Conditioning Compressor Mounting
Compressor, Mounting 4.0L Engine ..... Fig. 24 - 510
Compressor, Mounting 4.7L Engine ..... Fig. 24 - 520

Air Ducts and Outlets
Air Ducts and Outlets ..... Fig. 24 - 610

HEVAC with Auto Temp Control, LHD
Figure 24-150

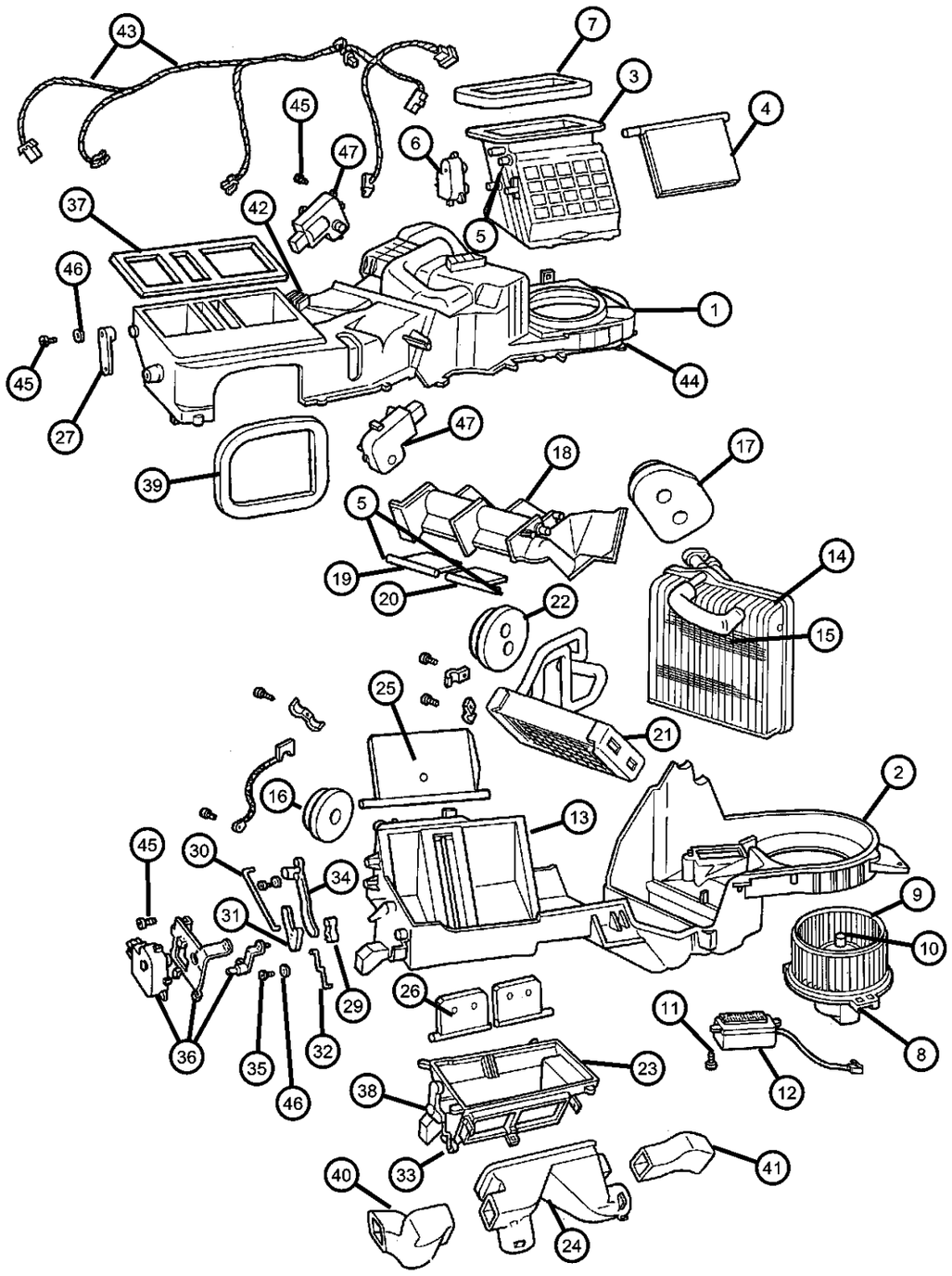

ITEM	PART NUMBER	QTY	LINE	SERIES	BODY	ENGINE	TRANS	TRIM	DESCRIPTION
Note: Sales Codes: EV0 = All 4.7L Gas Engines HAF = Auto Temp Control									
1	05073483AA	1							CASE, Heater And A/C Unit, Upper
2	05073482AA	1							CASE, Heater And A/C Unit, Lower
3	05012713AB	1							HOUSING, Air Recirculating
4	05012712AA	1							DOOR, Air Inlet
5	05012711AA	3							LINK, Heater and Damper Contrl
6	05012710AA	2							SERVO, A/C Temperature Door
7	05012709AA	1							SEAL, Air Inlet
8	05073486AA	1							MOTOR, Blower
9	05012701AB	1							FAN, Blower Motor
10	02837680	1							CLAMP, Blower Motor Wheel
11	05012700AA	3							SCREW, Tapping
12	05012699AA	1							RESISTOR, Blower Motor
13	05012698AB	1							INSULATOR, Air Conditioning
14	05073481AA	1							EVAPORATOR, Air Conditioning
15	05073364AA	1							THERMISTOR, A/C Evaporator Air, Probe
16	05012696AA	1							SEAL, Evaporator Drain
17									SEAL, A/C Evaporator
	05061014AA	1							Small
	05061015AA	1							Large
18	05073480AA	1							CASE, Heater And A/C Unit
19	05012693AA	1							DOOR, Blend Air
20	05012692AA	1							DOOR, Blend Air
21	05012691AB	1							CORE, Heater
22	05073479AA	1							PACKINGHeater Tube
23	05012743AA	1							HOUSING, A/C Unit
24	05012742AB	1							COVER, Heater
25	05012740AA	1							DOOR, Distribution Duct
26	05012739AA	1							DOOR, Floor Defroster Duct
27	05012738AA	1							LEVER, Panel Door
-28	05012741AA	1							DOOR, Panel

GRAND CHEROKEE (WJ)

SERIES	LINE	BODY	ENGINE	TRANSMISSION
H = Laredo M = Sport P = Limited S = Overland	T = JEEP - 2WD J = JEEP - 4WD U = JEEP - 4WD (RHD)	74 = SPORT UTILITY 4-DR	ERH = Engine - 4.0L Power Tech I-6 EVA = Engine- 4.7L V8 MPI EVC = Engine - 4.7L HO V8 MPI ER0 = All 4.0L 6 Cyl. Gas EV0 = All 4.7L Gas	DGK = 4 Speed Auto, 42RE DGQ = 5 Speed Auto, 45RFE DG0 = All Automatic Transmissions

HEVAC with Auto Temp Control, LHD
Figure 24-150

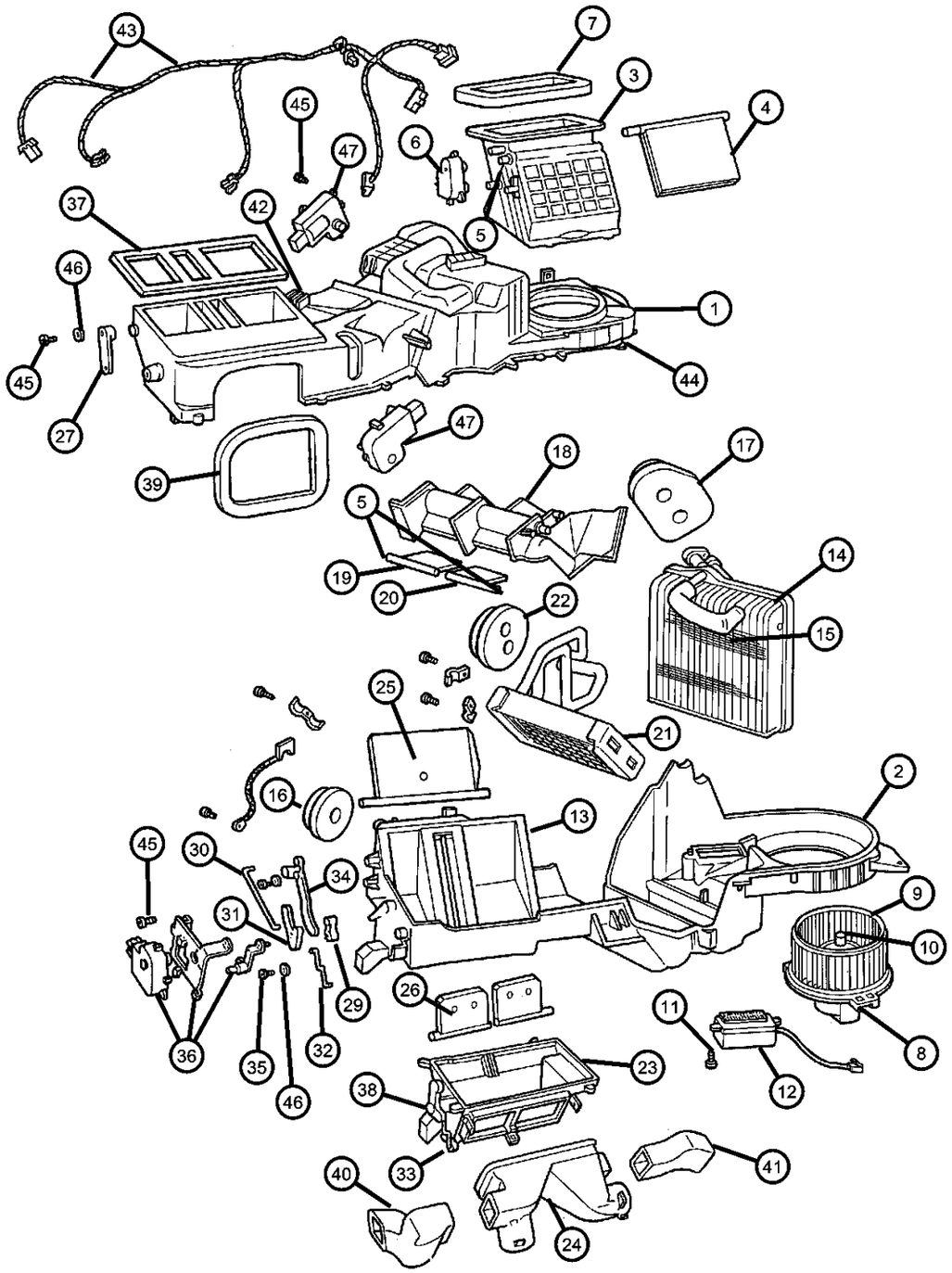

ITEM	PART NUMBER	QTY	LINE	SERIES	BODY	ENGINE	TRANS	TRIM	DESCRIPTION
29	05012735AA	1							LEVER, Panel Door
30	05012734AA	1							SHAFT, A/C and Heater Door
31	05012733AA	1							LINK, Heater and Defroster Door
32	05012732AA	1							SHAFT, Defroster Door
33	05012731AA	1							LEVER, A/C Vent Defrost Door
34	05012730AA	1							LEVER, Panel Door
35	05012729AA	2							SCREW, Tapping
36	05012728AA	1							SERVO, Mode Door, Includes Lever
37	05012727AA	1							SEAL, Demister
38	05012726AA	1							SEAL, Defroster Duct
39	05015354AA	1							SEAL, Panel
40	05012722AD	1							DUCT, Floor Distribution
41	05012722AA	1							DUCT, Floor Distribution
42	05012721AA	1							SEAL, Air Conditioning Unit
43	05073485AA	1							HARNESS
44	04720533	32							SCREW, Heater Housing
45	04720534	3							SCREW, Pan Head
46	05012756AA	5							SPRING
47	05012710AA	2							SERVO, A/C Temperature Door

GRAND CHEROKEE (WJ)

SERIES	LINE	BODY	ENGINE	TRANSMISSION
H = Laredo M = Sport P = Limited S = Overland	T = JEEP - 2WD J = JEEP - 4WD U = JEEP - 4WD (RHD)	74 = SPORT UTILITY 4-DR	ERH = Engine - 4.0L Power Tech I-6 EVA = Engine- 4.7L V8 MPI EVC = Engine - 4.7L HO V8 MPI ER0 = All 4.0L 6 Cyl. Gas EV0 = All 4.7L Gas	DGK = 4 Speed Auto, 42RE DGQ = 5 Speed Auto, 45RFE DG0 = All Automatic Transmissions

AR = use ase required - = Non illustrrated part

HEVAC with Manual Control, LHD
Figure 24-170

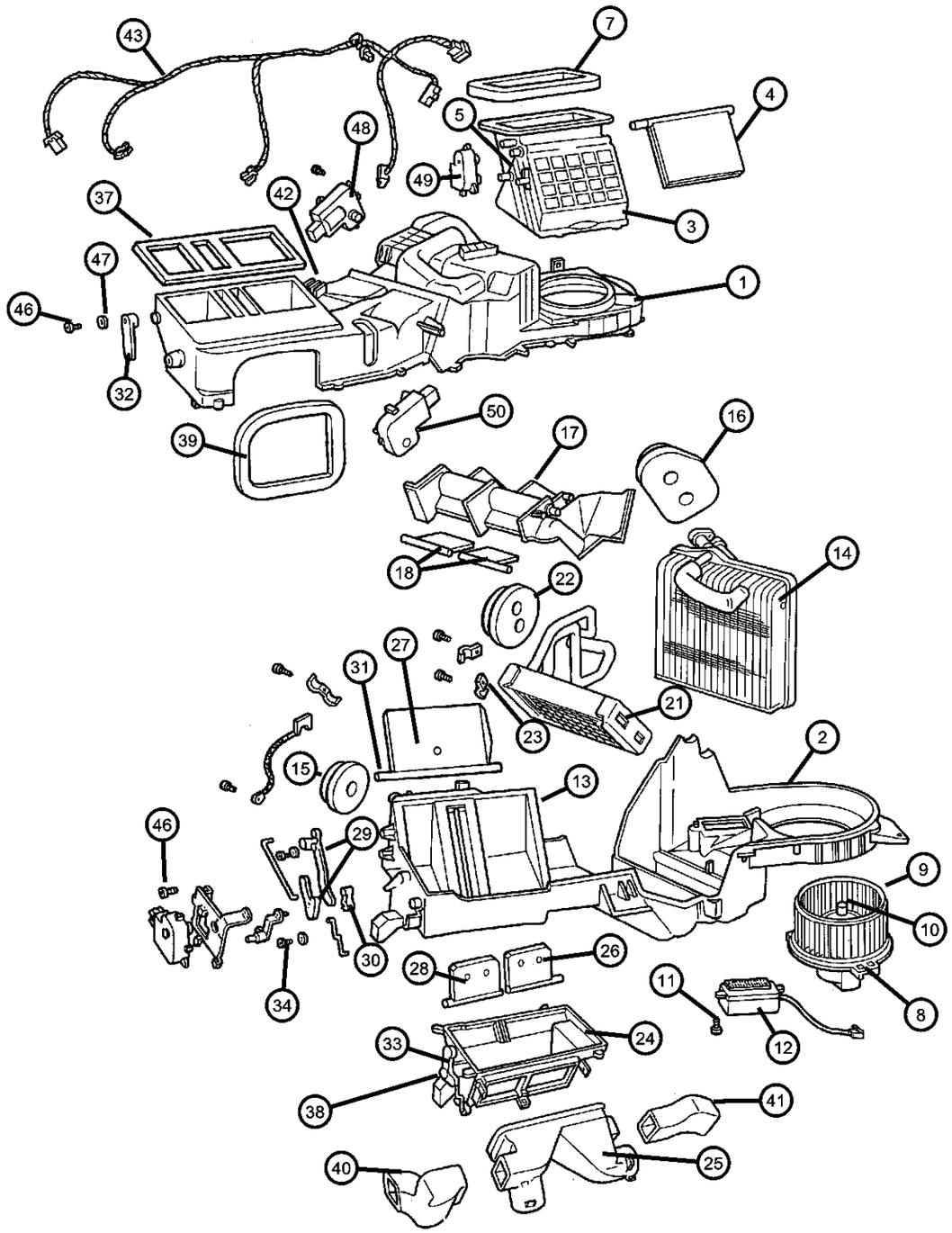

ITEM	PART NUMBER	QTY	LINE	SERIES	BODY	ENGINE	TRANS	TRIM	DESCRIPTION
Note: Sales Code EV0 = All 4.7L Gas Engines HAA = Air Conditioning									
1									CASE, Heater And A/C Unit
	05073480AA	1							Middle
	05073483AB	1							Upper
2	05073487AA	1							CASE, Heater And A/C UnitLower
3	05012754AB	1							HOUSING, Air Recirculating
4	05012712AA	1							DOOR, Air Inlet
5	05012753AA	1							LEVER, A/C Recirculation Door
-6	05012752AA	1							DIAPHRAGM, Heater and A/C Unit
7	05012709AA	1							SEAL, Air Inlet
8	05073486AA	1							MOTOR, Blower
9	05012701AB	1							FAN, Blower Motor
10	02837680	1							CLAMP, Blower Motor Wheel
11	05012700AA	3							SCREW, Tapping
12	05014212AA	1							RESISTOR, Blower Motor
13	05012698AB	1							INSULATOR, Air Conditioning
14	05073481AA	1							EVAPORATOR, Air Conditioning
15	05012696AA	1							SEAL, Evaporator Drain
16	05061014AA	1							SEAL, A/C Evaporator
17	05012762AA	1							HOUSING, A/C Unit
18	05012751AA	1							DOOR, Blend Air
-19	05012711AA	3							LINK, Heater and Damper Contrl
-20	05012750AA	1							SERVO, A/C Temperature Door
21	05012691AC	1							CORE, Heater
22	05073479AA	1							PACKINGHeater Tube
23	05012745AA	1							CLAMP, Heater
24	05012762AA	1							HOUSING, A/C Unit
25	05012742AB	1							COVER, Heater
26	05012741AA	1							DOOR, Panel
27	05012740AA	1							DOOR, Distribution Duct
28	05012739AA	1							DOOR, Floor Defroster Duct
29	05012738AA	1							LEVER, Panel Door

GRAND CHEROKEE (WJ)

SERIES	LINE	BODY	ENGINE	TRANSMISSION
H = Laredo M = Sport P = Limited S = Overland	T = JEEP - 2WD J = JEEP - 4WD U = JEEP - 4WD (RHD)	74 = SPORT UTILITY 4-DR	ERH = Engine - 4.0L Power Tech I-6 EVA = Engine- 4.7L V8 MPI EVC = Engine - 4.7L HO V8 MPI ER0 = All 4.0L 6 Cyl. Gas EV0 = All 4.7L Gas	DGK = 4 Speed Auto, 42RE DGQ = 5 Speed Auto, 45RFE DG0 = All Automatic Transmissions

HEVAC with Manual Control, LHD
Figure 24-170

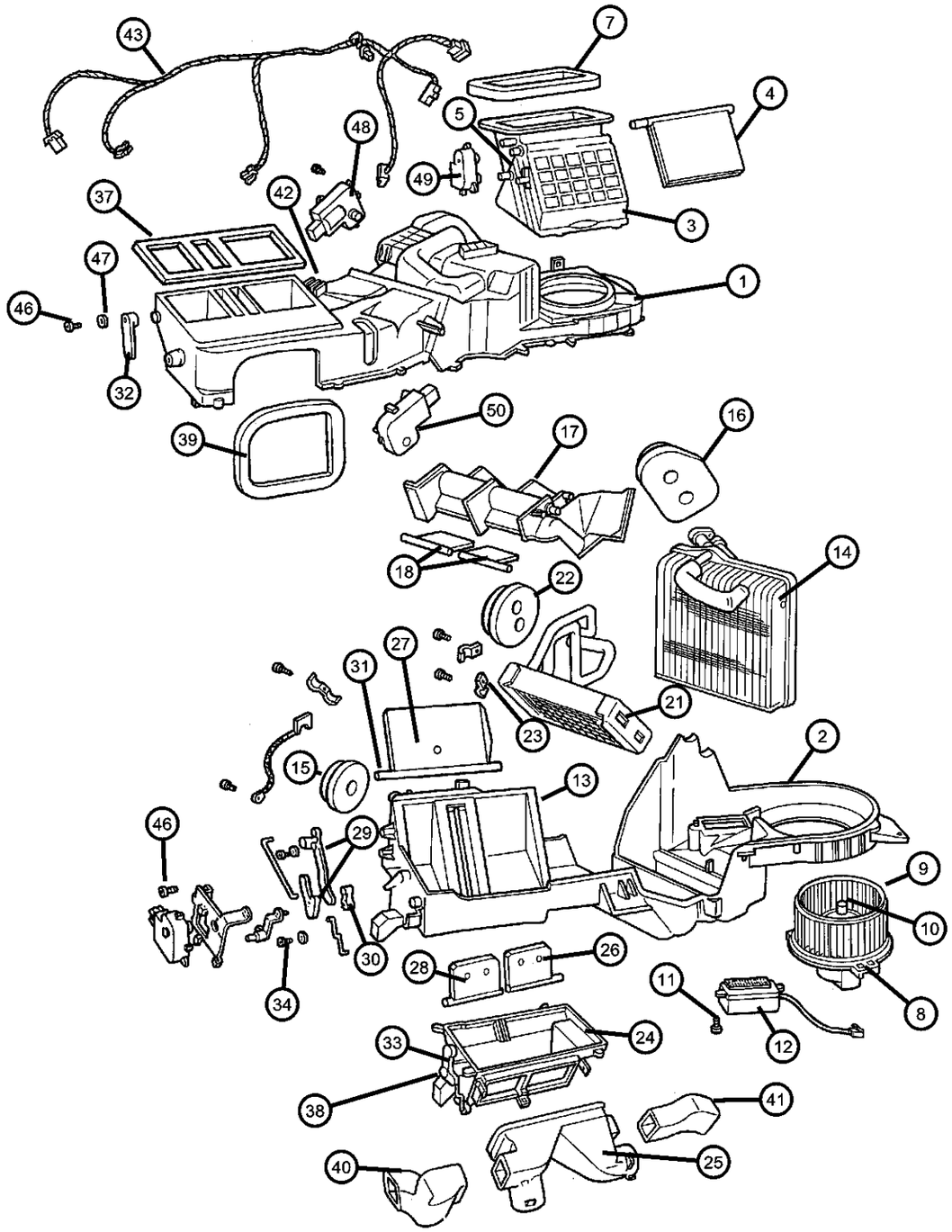

ITEM	PART NUMBER	QTY	LINE	SERIES	BODY	ENGINE	TRANS	TRIM	DESCRIPTION
30	05012735AA	1							LEVER, Panel Door
31	05012734AA	1							SHAFT, A/C and Heater Door
32	05012731AA	1							LEVER, A/C Vent Defrost Door
33	05012761AA	1							LEVER, Panel Door
34	05012729AA	1							SCREW, Tapping
-35	05012760AA	1							DIAPHRAGM, Heater and A/C Unit
-36	05012759AA	1							DIAPHRAGM, Heater and A/C Unit
37	05012727AA	1							SEAL, Demister
38	05012726AA	1							SEAL, Defroster Duct
39	05015355AA	1							SEAL, Panel
40	05012722AD	1							DUCT, Floor Distribution
41	05012722AD	1							DUCT, Floor Distribution
42	05012721AA	1							SEAL, Air Conditioning Unit
43	05073371AA	1							HARNESS, Wiring
-44	05073364AA	1							THERMISTOR, A/C Evaporator Air
-45	05012757AC	1							TUBE, Vacuum
46	04720533	32							SCREW, Heater Housing
47	04720534	3							SCREW, Pan Head
48	05012756AA	5							SPRING
49	05012750AA	1							SERVO, A/C Temperature Door
50	05012750AA	1							SERVO, A/C Temperature Door

GRAND CHEROKEE (WJ)

SERIES	LINE	BODY	ENGINE	TRANSMISSION
H = Laredo M = Sport P = Limited S = Overland	T = JEEP - 2WD J = JEEP - 4WD U = JEEP - 4WD (RHD)	74 = SPORT UTILITY 4-DR	ERH = Engine - 4.0L Power Tech I-6 EVA = Engine- 4.7L V8 MPI EVC = Engine - 4.7L HO V8 MPI ER0 = All 4.0L 6 Cyl. Gas EV0 = All 4.7L Gas	DGK = 4 Speed Auto, 42RE DGQ = 5 Speed Auto, 45RFE DG0 = All Automatic Transmissions

AR = use ase required - = Non illustrrated part

Hoses, Heater 4.0L Engine
Figure 24-240

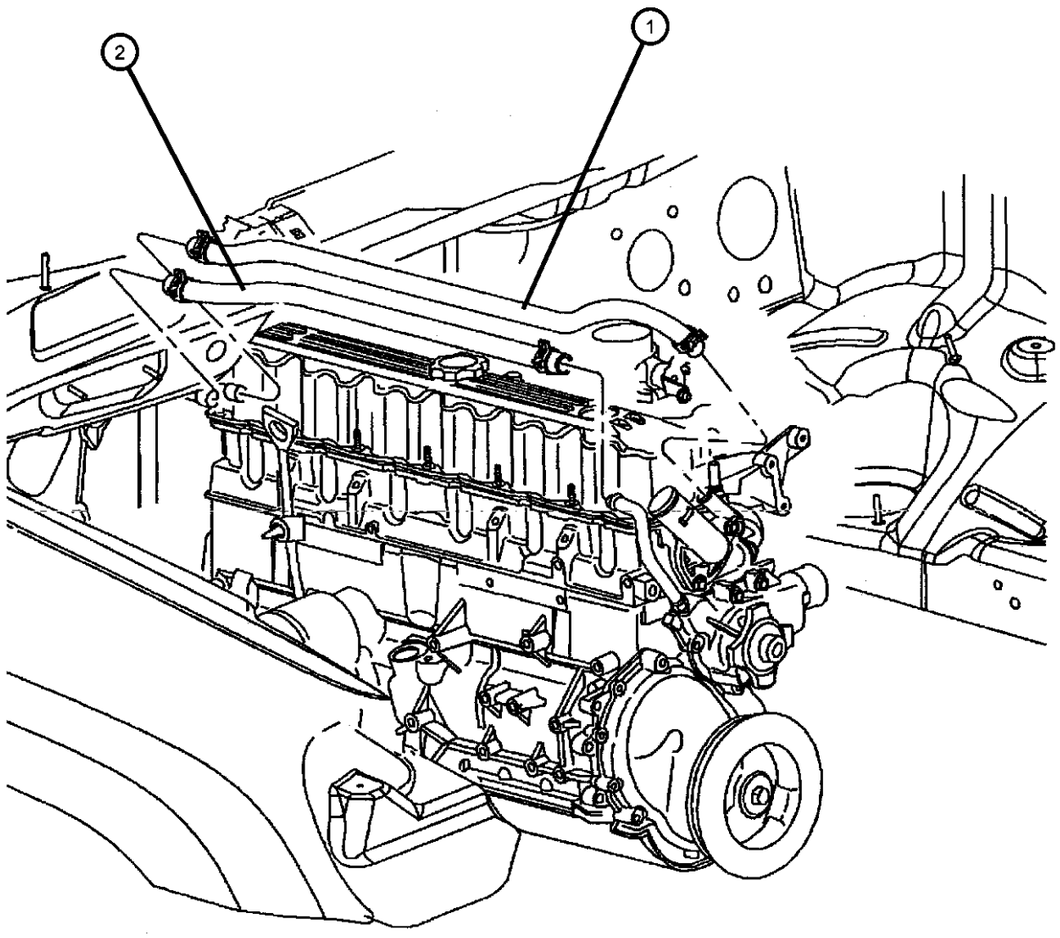

ITEM	PART NUMBER	QTY	LINE	SERIES	BODY	ENGINE	TRANS	TRIM	DESCRIPTION
Note: Sales Code ER0 = 4.0 L Engine									
1	55115890	1				ER0			HOSE, Heater Supply
2	55115897	1				ER0			HOSE, Heater Return

GRAND CHEROKEE (WJ)

SERIES	LINE	BODY	ENGINE	TRANSMISSION
H = Laredo M = Sport P = Limited S = Overland	T = JEEP - 2WD J = JEEP - 4WD U = JEEP - 4WD (RHD)	74 = SPORT UTILITY 4-DR	ERH = Engine - 4.0L Power Tech I-6 EVA = Engine- 4.7L V8 MPI EVC = Engine - 4.7L HO V8 MPI ER0 = All 4.0L 6 Cyl. Gas EV0 = All 4.7L Gas	DGK = 4 Speed Auto, 42RE DGQ = 5 Speed Auto, 45RFE DG0 = All Automatic Transmissions

Hoses, Heater 4.7L Engine
Figure 24-245

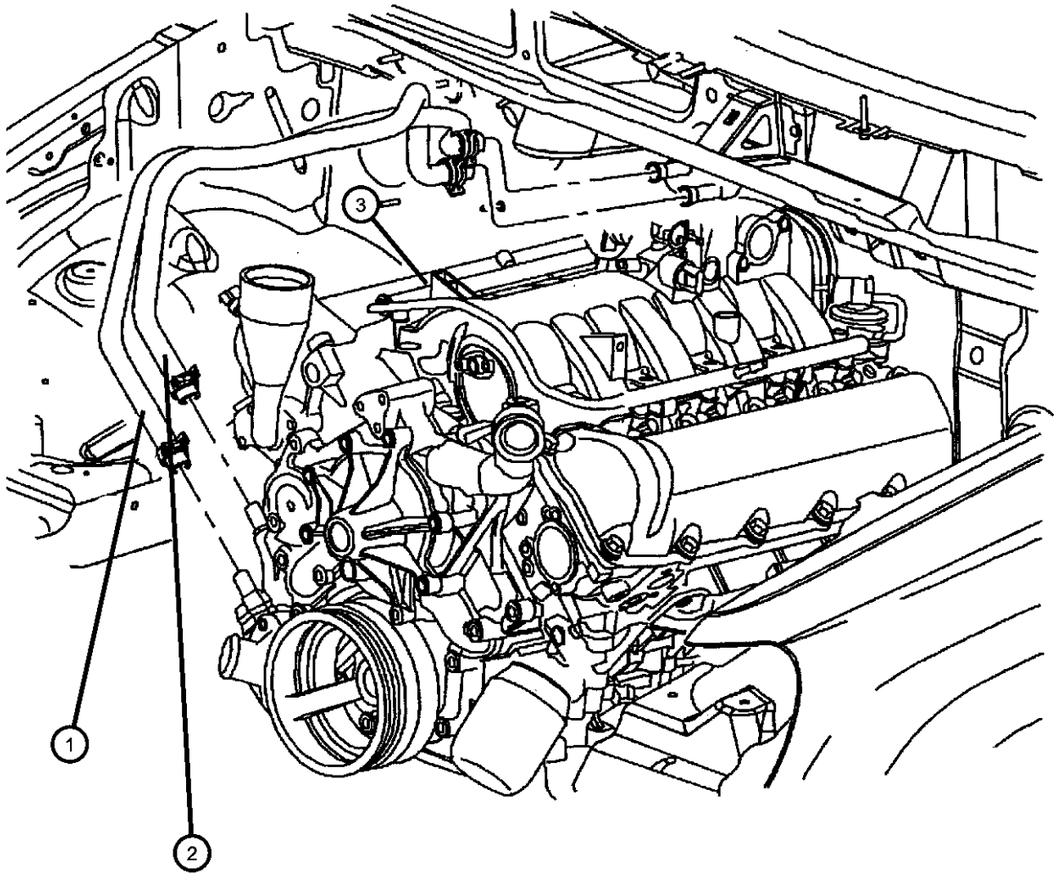

ITEM	PART NUMBER	QTY	LINE	SERIES	BODY	ENGINE	TRANS	TRIM	DESCRIPTION
Note: Sales Code EV0 = 4.7 L Engine									
1	55115895AB	1				EV0			TUBE AND HOSE, Supply
2	55115896AB	1				EV0			TUBE AND HOSE, Return
3	55055925AB	1				EV0			CLIP, Heater Hose

GRAND CHEROKEE (WJ)

SERIES	LINE	BODY	ENGINE	TRANSMISSION
H = Laredo M = Sport P = Limited S = Overland	T = JEEP - 2WD J = JEEP - 4WD U = JEEP - 4WD (RHD)	74 = SPORT UTILITY 4-DR	ERH = Engine - 4.0L Power Tech I-6 EVA = Engine- 4.7L V8 MPI EVC = Engine - 4.7L HO V8 MPI ER0 = All 4.0L 6 Cyl. Gas EV0 = All 4.7L Gas	DGK = 4 Speed Auto, 42RE DGQ = 5 Speed Auto, 45RFE DG0 = All Automatic Transmissions

Accumulator, Condenser and Lines 4.0L Engines
Figure 24-250

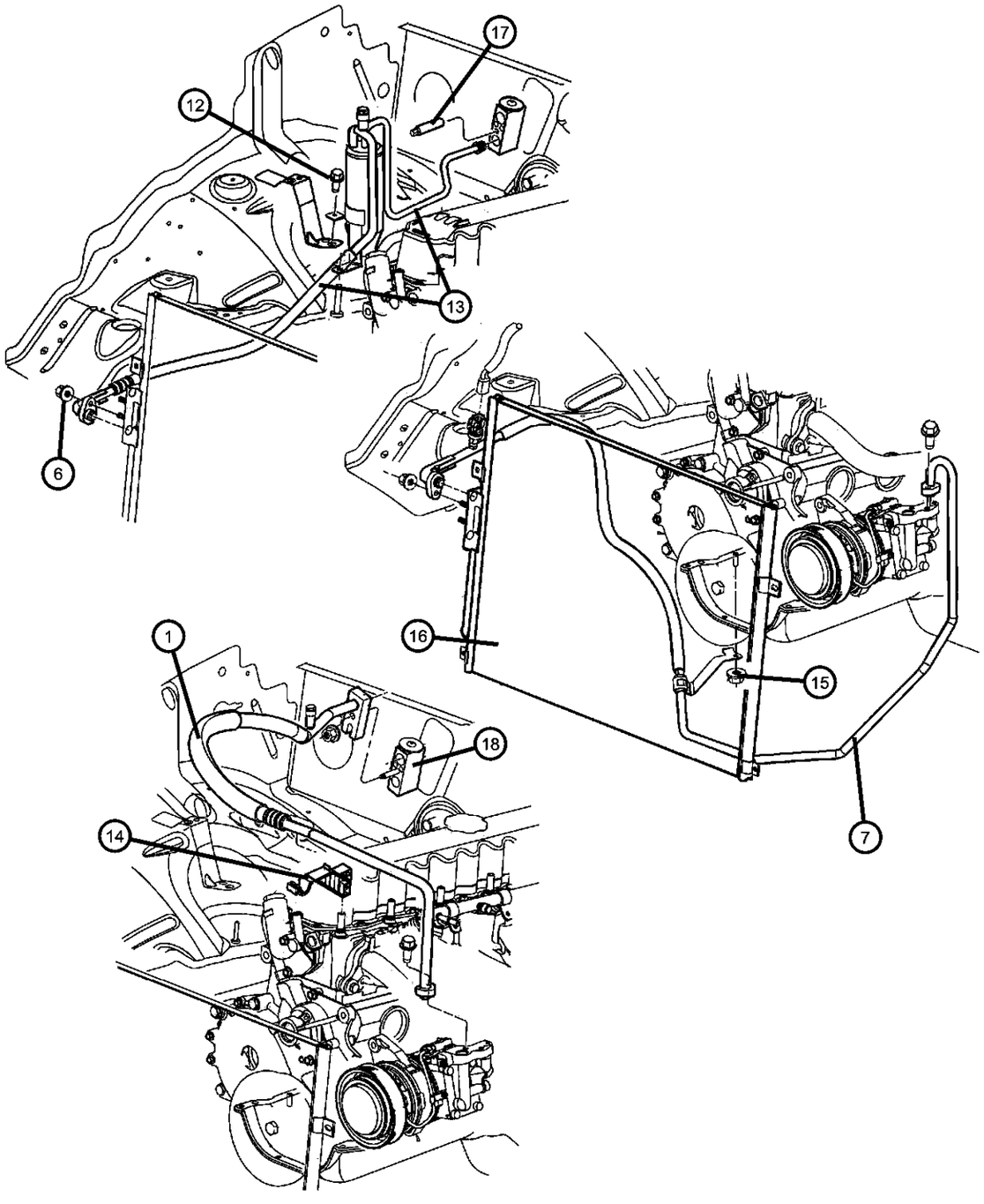

ITEM	PART NUMBER	QTY	LINE	SERIES	BODY	ENGINE	TRANS	TRIM	DESCRIPTION
Note: Sales Code ER0 = All 4.0L Engines									
Note: Sales Code EV0 = All 4.7L Gas Engines									
Note: Sales Code EX0 = All 3.1L Engines									
1									LINE, A/C Suction
	55116555AB	1				ER0			
	55116556AB	1				EV0			
-2	05012981AA	1				ER0			O RING, A/C Suction Line
-3	05066500AA	1				ER0			O RING, A/C Line
-4	05073260AA	1				ER0			CAP
-5	05011346AA	1				ER0			VALVE CORE, Service Port
6	06101445	1							NUT AND WASHER, Hex Nut-Coned Washer, M8 x 1.25
7	55117262AB	1				ER0			LINE, A/C Discharge
-8	05073617AA	1				ER0			TRANSDUCER, Pressure Sensor
-9									O RING, A/C Line
	05080519AA	1				ER0			Small
	05080520AA	1				ER0			Large
-10	05011346AA	1				ER0			VALVE CORE, Service Port
-11	05012988AA	1				ER0			BRACKET, A/C Line
12	06102132AA	2							SCREW, Hex Head, M6x1x20
13	55116560AC	1				ER0, EV0			LINE, A/C Receiver Outlet, Includes reciever drier
14	55116419AB	1				ER0			BRACKET, Hose
15	06033560	1				ER0			NUT AND WASHER, Hex Nut-Coned Washer, .25-20
16	55115918AC	1				ER0			CONDENSER, Air Conditioning
17	06507440AA	1							STUD
18	04885974AC	1							VALVE, A/C Expansion
-19									O RING, A/C Line
	05073291AA	1				ER0, EV0			Condenser End
	05073292AA	1				ER0, EV0			Valve End

GRAND CHEROKEE (WJ)

SERIES	LINE	BODY	ENGINE	TRANSMISSION
H = Laredo M = Sport P = Limited S = Overland	T = JEEP - 2WD J = JEEP - 4WD U = JEEP - 4WD (RHD)	74 = SPORT UTILITY 4-DR	ERH = Engine - 4.0L Power Tech I-6 EVA = Engine- 4.7L V8 MPI EVC = Engine - 4.7L HO V8 MPI ER0 = All 4.0L 6 Cyl. Gas EV0 = All 4.7L Gas	DGK = 4 Speed Auto, 42RE DGQ = 5 Speed Auto, 45RFE DG0 = All Automatic Transmissions

Accumulator, Condenser and Lines 4.7L Engine
Figure 24-255

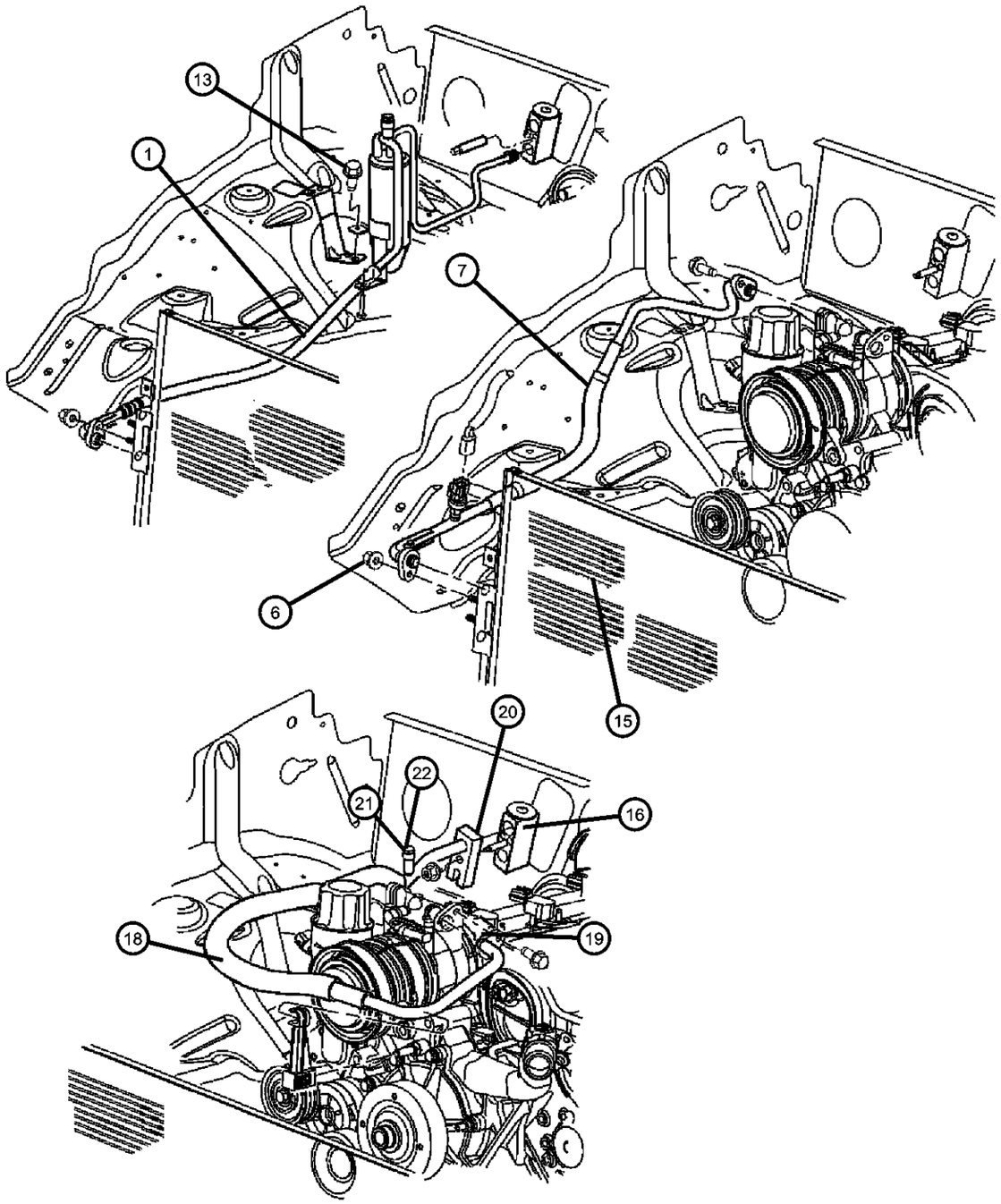

ITEM	PART NUMBER	QTY	LINE	SERIES	BODY	ENGINE	TRANS	TRIM	DESCRIPTION
Sales Code:									
[ER0] = All 4.0L Engines									
[EV0] = All 4.7L Gas Engines									
1	55116560AC	1				ER0, EV0			LINE, A/C Receiver Outlet
-2	05073291AA	1				ER0, EV0			O RING, A/C Line
-3	05073292AA	1				ER0, EV0			O RING, A/C Line
-4	05073293AA	1				ER0, EV0			CLIP
-5									VALVE CORE, High Flow
	05073294AA	1				ER0, EV0			
	05073295AA	1				ER0, EV0			Chargeport
6	06101445	1				ER0, EV0			NUT AND WASHER, Hex Nut-Coned Washer, M8 x 1.25
7									LINE, A/C Discharge
	55116467AB	1				EV0			[Up To 9-26-01]
	55116467AC	1				EV0			[After 9-26-01]
-8	05073617AA	1				ER0			TRANSDUCER, Pressure Sensor
-9	05080519AA	1				ER0			O RING, A/C Line
-10	05080520AA	1				ER0			O RING, A/C Line
-11	05073294AA	1				ER0, EV0			VALVE CORE, High Flow
-12	05012988AA	1				ER0			BRACKET, A/C Line
13	06502064	6							SCREW, Tapping, M6x1x20
-14	55116809AA	1							LABEL, Refrigerant
15	55115918AC	1				EV0			CONDENSER, Air Conditioning
16	04885974AA	1							VALVE, A/C Expansion
-17									O RING, Expansion Valve
	04885802AA	1							15.54MM ID
	04885803AA	1							10.25MM ID
18	55116556AB	1				EV0			LINE, A/C Suction
19	05012981AA	1				EV0			O RING, A/C Suction Line
20	05066500AA	1				EV0			O RING, A/C Line
21	05011346AA	1				EV0			VALVE CORE, Service Port
22	05073260AA	1				EV0			CAP
-23	06507440AA	1							STUD

GRAND CHEROKEE (WJ)

SERIES	LINE	BODY	ENGINE	TRANSMISSION
H = Laredo M = Sport P = Limited S = Overland	T = JEEP - 2WD J = JEEP - 4WD U = JEEP - 4WD (RHD)	74 = SPORT UTILITY 4-DR	ERH = Engine - 4.0L Power Tech I-6 EVA = Engine- 4.7L V8 MPI EVC = Engine - 4.7L HO V8 MPI ER0 = All 4.0L 6 Cyl. Gas EV0 = All 4.7L Gas	DGK = 4 Speed Auto, 42RE DGQ = 5 Speed Auto, 45RFE DG0 = All Automatic Transmissions

AR = use ase required - = Non illustrrated part

Hevac Vacuum Engine Lines and Controls
Figure 24-260

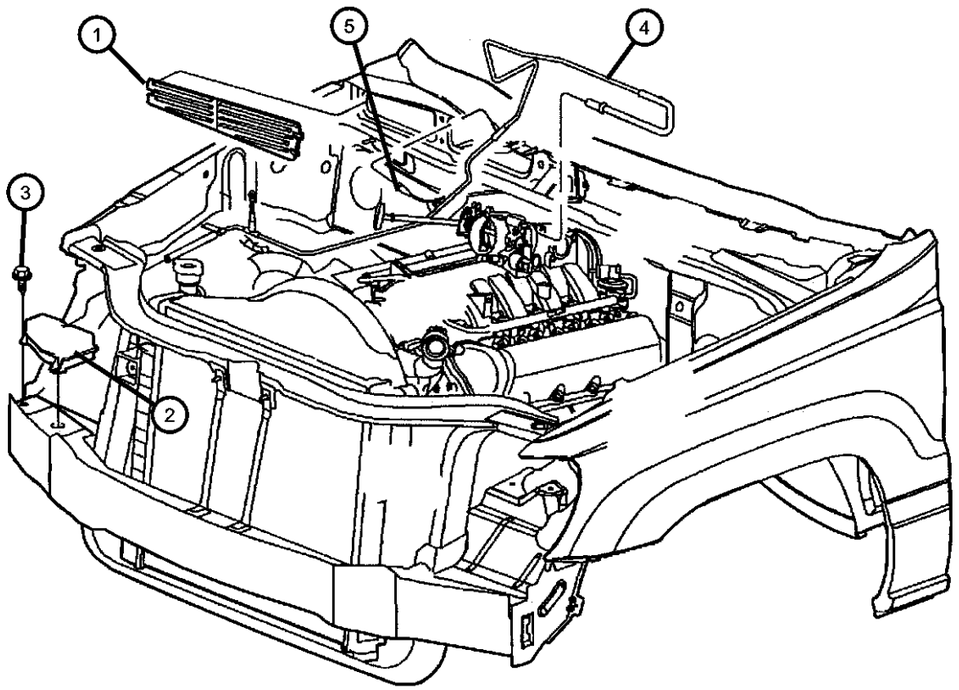

ITEM	PART NUMBER	QTY	LINE	SERIES	BODY	ENGINE	TRANS	TRIM	DESCRIPTION
Note: Sales Code ER0 = 4.0 L Engine									
Note: Sales Code EX0 = 3.1 L Engine									
Note: Sales Code EV0 = 4.7 L Engine									
1	55115885	1							BAFFLE, Air
2	55115899	1				ER0, EV0			RESERVOIR, Vacuum
3	55115899	1							SCREW, Hex Flange Head Tapping, M4.8 x 1.59 x 14.00, (NOT SERVICED)
4									VACUUM HARNESS, Heater and A/C
	55115900AD	1				EV0			
	55115901AD	1				ER0			
5	03580172	1							CAP, Vacuum

GRAND CHEROKEE (WJ)

SERIES	LINE	BODY	ENGINE	TRANSMISSION
H = Laredo M = Sport P = Limited S = Overland	T = JEEP - 2WD J = JEEP - 4WD U = JEEP - 4WD (RHD)	74 = SPORT UTILITY 4-DR	ERH = Engine - 4.0L Power Tech I-6 EVA = Engine- 4.7L V8 MPI EVC = Engine - 4.7L HO V8 MPI ER0 = All 4.0L 6 Cyl. Gas EV0 = All 4.7L Gas	DGK = 4 Speed Auto, 42RE DGQ = 5 Speed Auto, 45RFE DG0 = All Automatic Transmissions

Control, Heater and Air Conditioner
Figure 24-330

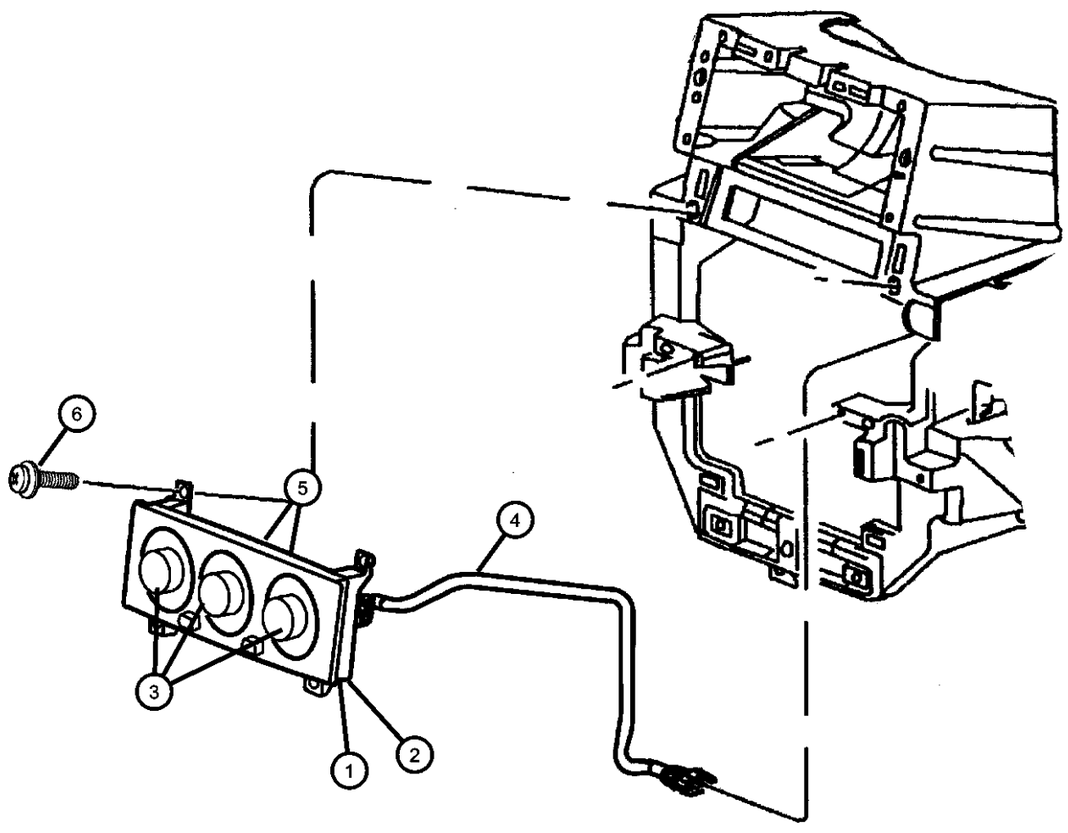

ITEM	PART NUMBER	QTY	LINE	SERIES	BODY	ENGINE	TRANS	TRIM	DESCRIPTION
Note: Sales Code HAA = Air Conditioning									
Note: Sales Code HAF = Auto Temp Control									
1	55115904	1							CONTROL, A/C And Heater
2	55116709AC	1							CONTROL, Auto Temp Control
3	05012976AA	2							KNOB, ATC Control
4	05012977AA	1							HARNESS, A/C And Heater Vacuum
5	05013124AA	2							BULB, Heater and A/C Control
6	05013124AA	2							SCREW, Tapping, (NOT SERVICED)

GRAND CHEROKEE (WJ)

SERIES	LINE	BODY	ENGINE	TRANSMISSION
H = Laredo M = Sport P = Limited S = Overland	T = JEEP - 2WD J = JEEP - 4WD U = JEEP - 4WD (RHD)	74 = SPORT UTILITY 4-DR	ERH = Engine - 4.0L Power Tech I-6 EVA = Engine- 4.7L V8 MPI EVC = Engine - 4.7L HO V8 MPI ER0 = All 4.0L 6 Cyl. Gas EV0 = All 4.7L Gas	DGK = 4 Speed Auto, 42RE DGQ = 5 Speed Auto, 45RFE DG0 = All Automatic Transmissions

Compressor, Air Conditioning 4.0L Engine
Figure 24-410

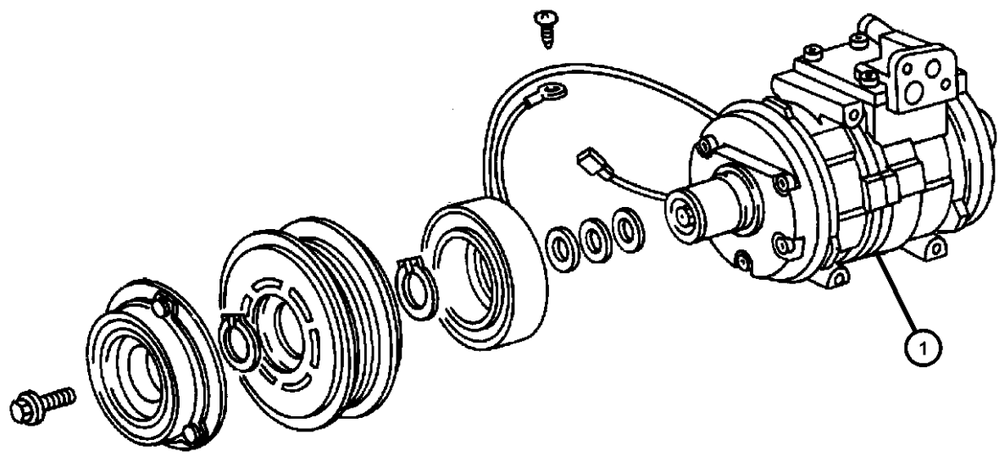

ITEM	PART NUMBER	QTY	LINE	SERIES	BODY	ENGINE	TRANS	TRIM	DESCRIPTION
Note: Sales Code ER0 = 4.0 L Engine									
1	55116807AA	1				ER0			COMPRESSOR, Air Conditioning
-2	05014413AA	1				ER0			MANIFOLD KIT, A/C Compressor
-3	04728854	1				ER0			SEAL, Manifold To Compressor
-4	55116423AA	1				ER0			BOLT, A/C Line Mounting
-5	05264457	1				ER0			BOLT KIT, A/C Compressor Manifold
-6	05003681AA	1				ER0			COIL, Air Conditioning Clutch
-7	05016376AA	1				ER0			PULLEY, A/C Compressor
-8	05264454	1				EV0			SNAP RING KIT, A/C Clutch
-9	82300102	1				ER0			LUBRICANT, Oil, 75w90
-10	05014415AA	1				ER0			CLUTCH, A/C Compressor, Overhaul Package

GRAND CHEROKEE (WJ)

SERIES	LINE	BODY	ENGINE	TRANSMISSION
H = Laredo M = Sport P = Limited S = Overland	T = JEEP - 2WD J = JEEP - 4WD U = JEEP - 4WD (RHD)	74 = SPORT UTILITY 4-DR	ERH = Engine - 4.0L Power Tech I-6 EVA = Engine- 4.7L V8 MPI EVC = Engine - 4.7L HO V8 MPI ER0 = All 4.0L 6 Cyl. Gas EV0 = All 4.7L Gas	DGK = 4 Speed Auto, 42RE DGQ = 5 Speed Auto, 45RFE DG0 = All Automatic Transmissions

Compressor, Air Conditioning 4.7L Engine
Figure 24-420

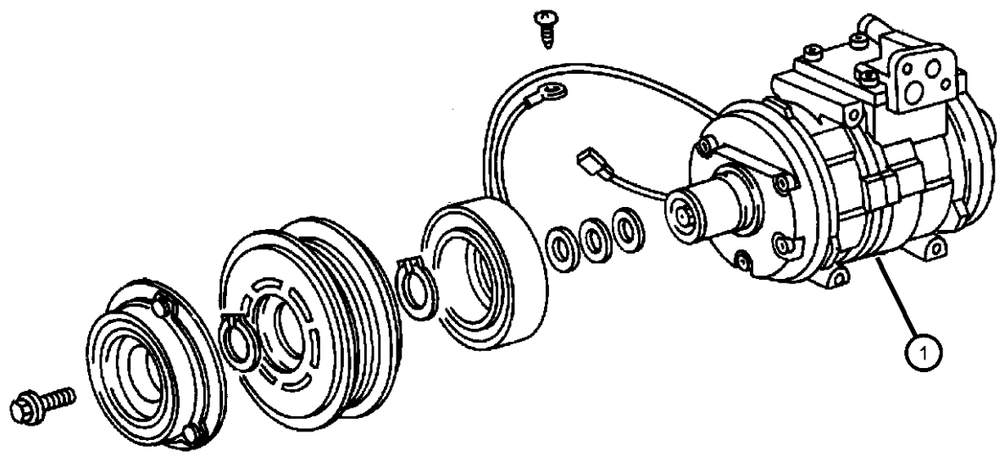

ITEM	PART NUMBER	QTY	LINE	SERIES	BODY	ENGINE	TRANS	TRIM	DESCRIPTION
Note: Sales Code EV0 = 4.7 L Engine									
1									COMPRESSOR, Air Conditioning
	55116806AA	1				EV0			[After 2-20-02]
	55116906AA	1				EV0			[Up To 2-20-02]
-2	05014414AA	1				EV0			MANIFOLD KIT, A/C Compressor
-3	04728854	1				EV0			SEAL, Manifold To Compressor
-4	05014416AA	1				EV0			CLUTCH OVERHAUL KIT, A/C Compressor
-5	55116423AA	1				EV0			BOLT, A/C Line Mounting
-6	05264457	1				EV0			BOLT KIT, A/C Compressor Manifold
-7	05003681AA	1				EV0			COIL, Air Conditioning Clutch
-8	05016376AA	1				EV0			PULLEY, A/C Compressor
-9	05264454	1				EV0			SNAP RING KIT, A/C Clutch
-10	82300102	1				EV0			LUBRICANT, Oil, 75w90

GRAND CHEROKEE (WJ)

SERIES	LINE	BODY	ENGINE	TRANSMISSION
H = Laredo M = Sport P = Limited S = Overland	T = JEEP - 2WD J = JEEP - 4WD U = JEEP - 4WD (RHD)	74 = SPORT UTILITY 4-DR	ERH = Engine - 4.0L Power Tech I-6 EVA = Engine- 4.7L V8 MPI EVC = Engine - 4.7L HO V8 MPI ER0 = All 4.0L 6 Cyl. Gas EV0 = All 4.7L Gas	DGK = 4 Speed Auto, 42RE DGQ = 5 Speed Auto, 45RFE DG0 = All Automatic Transmissions

Compressor, Mounting 4.0L Engine
Figure 24-510

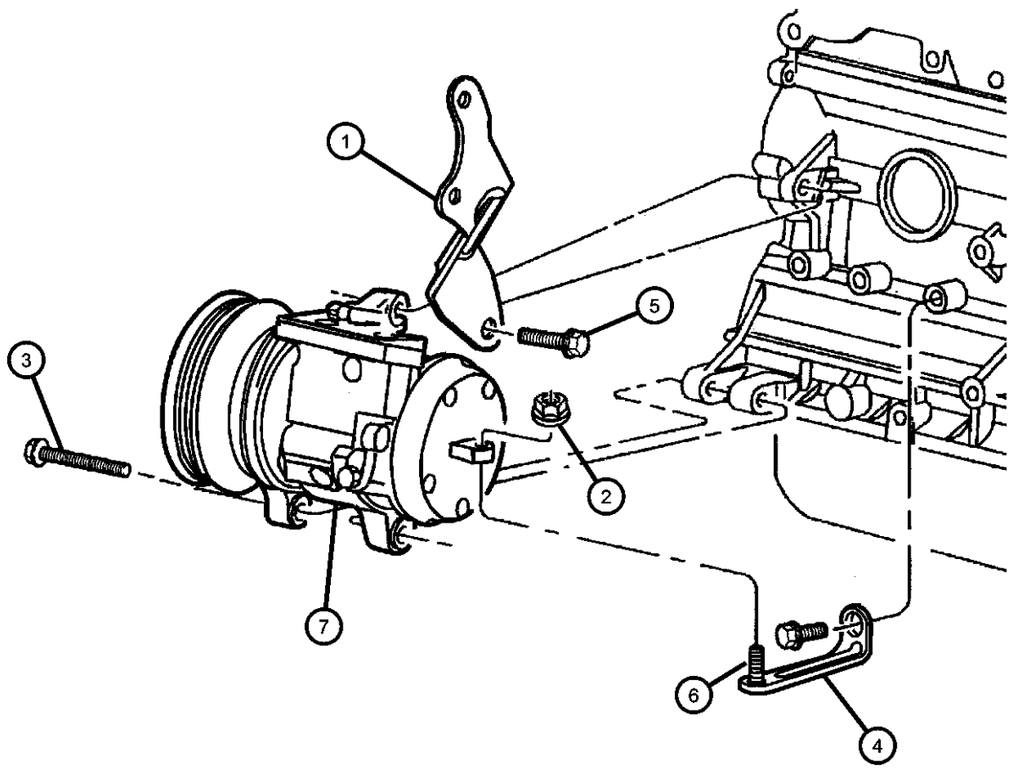

ITEM	PART NUMBER	QTY	LINE	SERIES	BODY	ENGINE	TRANS	TRIM	DESCRIPTION
Note: Sales Code ER0 = All 4.0L Engines Note: Sales Code EV0 = All 4.7L Gas Engines									
1	04854157	1				ER0			BRACE, Power Steering Pump
2	06502720	1				ER0, EV0			NUT, Hex Flange Lock, M8x1.25
3	06504344	1				ER0			SCREW AND WASHER, Hex Head
4	53013053AA	1				ER0			BRACE, A/C Compressor
5	53013053AA	1							SCREW AND WASHER, M10x1.50x45.00, (NOT SERVICED)
6	53013053AA	1							SCREW AND WASHER, Hex Head, (NOT SERVICED)
7	53013053AA	1							COMPRESSOR, Air Conditioning, (NOT REQUIRED)

GRAND CHEROKEE (WJ)

SERIES	LINE	BODY	ENGINE	TRANSMISSION
H = Laredo M = Sport P = Limited S = Overland	T = JEEP - 2WD J = JEEP - 4WD U = JEEP - 4WD (RHD)	74 = SPORT UTILITY 4-DR	ERH = Engine - 4.0L Power Tech I-6 EVA = Engine- 4.7L V8 MPI EVC = Engine - 4.7L HO V8 MPI ER0 = All 4.0L 6 Cyl. Gas EV0 = All 4.7L Gas	DGK = 4 Speed Auto, 42RE DGQ = 5 Speed Auto, 45RFE DG0 = All Automatic Transmissions

Compressor, Mounting 4.7L Engine
Figure 24-520

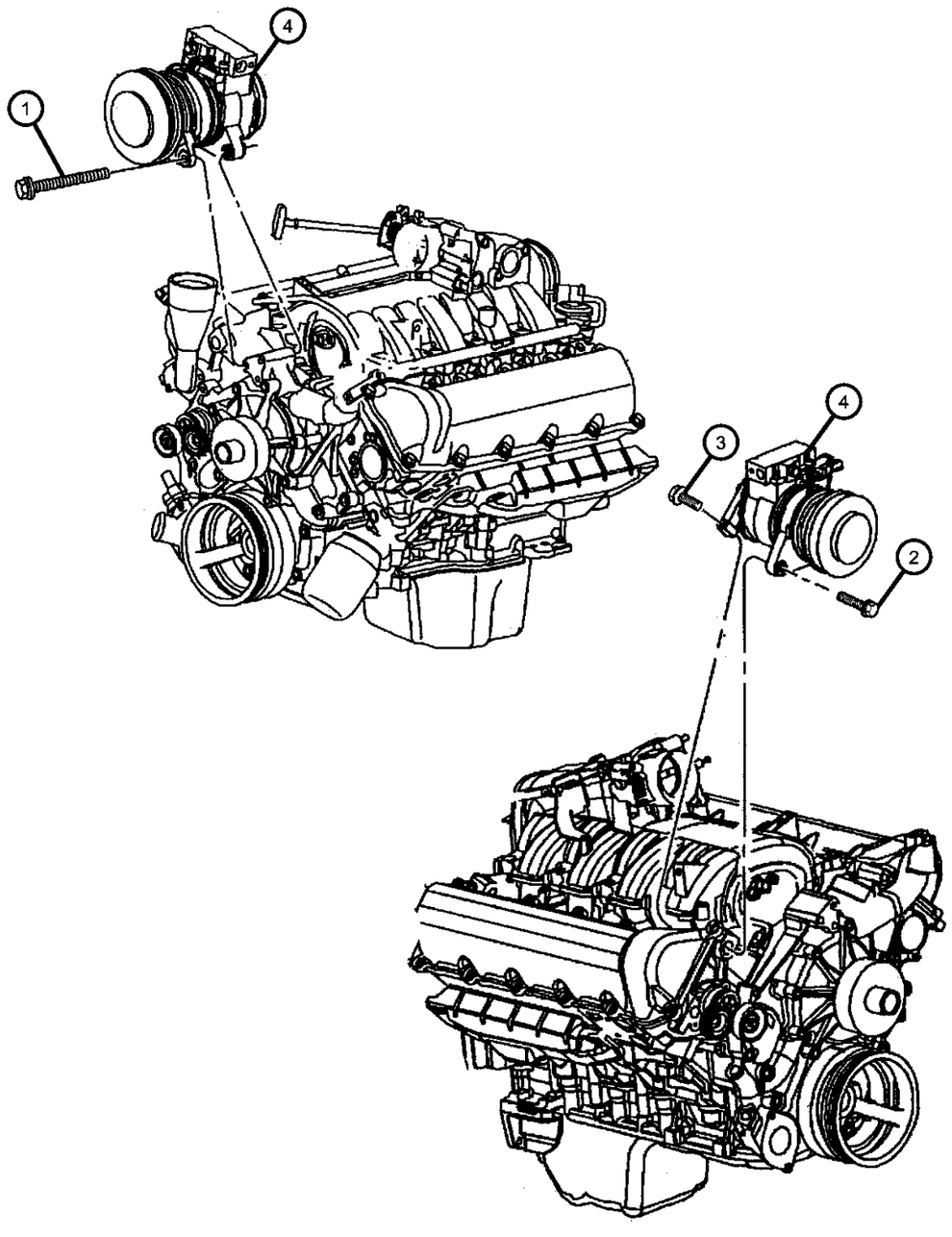

ITEM	PART NUMBER	QTY	LINE	SERIES	BODY	ENGINE	TRANS	TRIM	DESCRIPTION
Note: Sales Code EV0 = 4.7 L Engine									
1	06504344	1				EV0			SCREW AND WASHER, Hex Head
2	06101985	5				EV0			SCREW AND WASHER, M10x1.50x45.00
3	06102047AA	6				EV0			SCREW, Hex Head, M8x1.25x50
4	06102047AA	6							COMPRESSOR, Air Conditioning, (NOT REQUIRED)
-5	53031709AA	1				EV0			BRACE, A/C Compressor

GRAND CHEROKEE (WJ)

SERIES	LINE	BODY	ENGINE	TRANSMISSION
H = Laredo	T = JEEP - 2WD	74 = SPORT UTILITY 4-DR	ERH = Engine - 4.0L Power Tech I-6	DGK = 4 Speed Auto, 42RE
M = Sport	J = JEEP - 4WD		EVA = Engine- 4.7L V8 MPI	DGQ = 5 Speed Auto, 45RFE
P = Limited	U = JEEP - 4WD (RHD)		EVC = Engine - 4.7L HO V8 MPI	DG0 = All Automatic Transmissions
S = Overland			ER0 = All 4.0L 6 Cyl. Gas	
			EV0 = All 4.7L Gas	

Air Ducts and Outlets
Figure 24-610

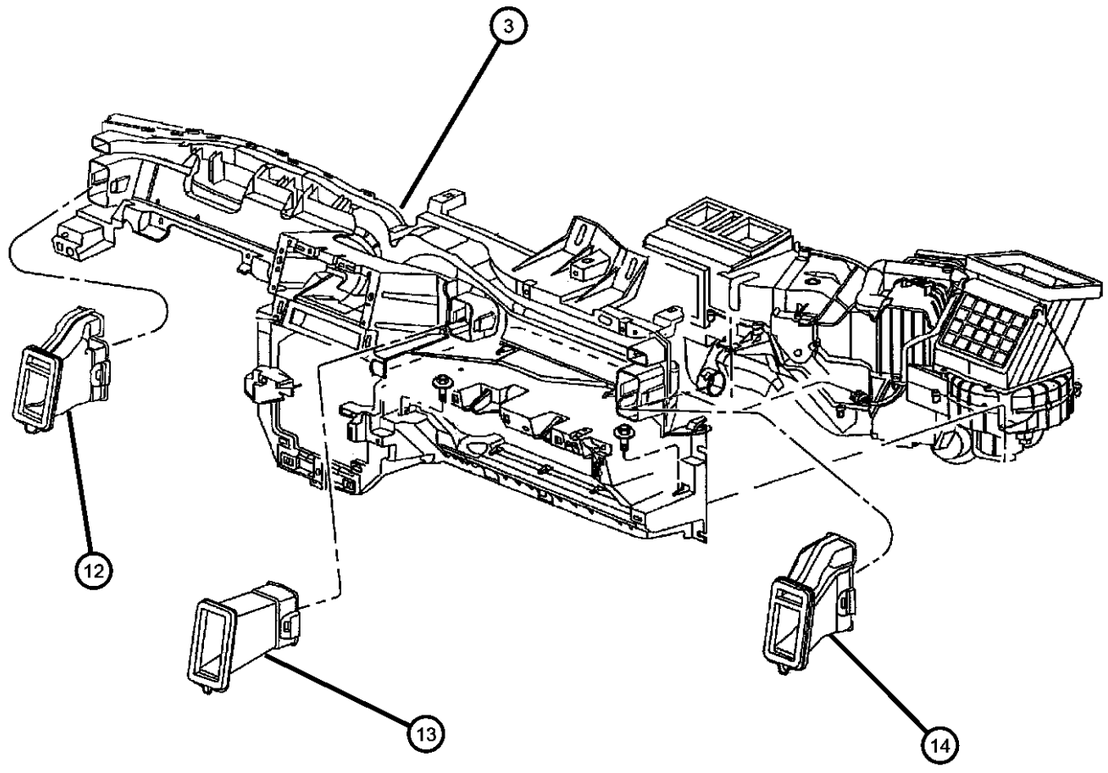

ITEM	PART NUMBER	QTY	LINE	SERIES	BODY	ENGINE	TRANS	TRIM	DESCRIPTION
-1	55116569AA	1							BRACKET, Instrument Panel, Steering Column Support
-2	06102141AA	5							SCREW, M6x1x25
3	55116407AC	1							DUCT, Instrument Panel, Structural
-4	06034319	2							CLIP, .453Wx.528LGx.017THK
-5	06034833	12							CLIP, Push, .164-7.5
-6	55116373AB	1							BRACKET, Instrument Panel, C/Channel Cover
-7	06101946	3							SCREW, Tapping
-8	55116373AB	1							BRACKET, Instrument Panel, Courtesy Lamp
-9	55116041	1							BRACKET, Instrument Panel, Center to Floor
-10	55116041	1							SCREW, Self Tapping, M6x1x15, (NOT SERVICED)
-11	55116014	1							DUCT, Defroster
12	55116287AB	1							DUCT, Instrument PanelExtension, Left
13	55116285AA	1							DUCT, Instrument Panel
14	55116286AB	1							DUCT, Instrument PanelExtension, Right

GRAND CHEROKEE (WJ)

SERIES	LINE	BODY	ENGINE	TRANSMISSION
H = Laredo M = Sport P = Limited S = Overland	T = JEEP - 2WD J = JEEP - 4WD U = JEEP - 4WD (RHD)	74 = SPORT UTILITY 4-DR	ERH = Engine - 4.0L Power Tech I-6 EVA = Engine- 4.7L V8 MPI EVC = Engine - 4.7L HO V8 MPI ER0 = All 4.0L 6 Cyl. Gas EV0 = All 4.7L Gas	DGK = 4 Speed Auto, 42RE DGQ = 5 Speed Auto, 45RFE DG0 = All Automatic Transmissions

Group - 25

Emission Systems

025-100 Emission Labels 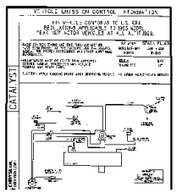	**025-300** Vacuum Canister 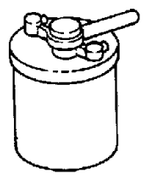	**025-400** Emission Harness 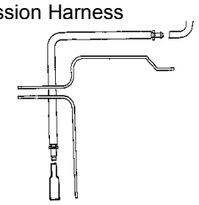	

Group - 25 Emission Systems

Illustration Title — Group-Fig. No.

Emission Labels

Emission Labels, 4.0 [ERH], 4.7 [EVA, EVC] ..... Fig. 25 - 110

Vacuum Canister

Vacuum Canister, 4.0 [ERH], 4.7 [EVA, EVC] ..... Fig. 25 - 310

Emission Harness

Emission Control Vacuum Harness, 4.0 [ERH], 4.7 [EVA, EVC] ..... Fig. 25 - 410

Leak Detection Pump, 4.0 [ERH], 4.7 [EVA, EVC] ..... Fig. 25 - 420

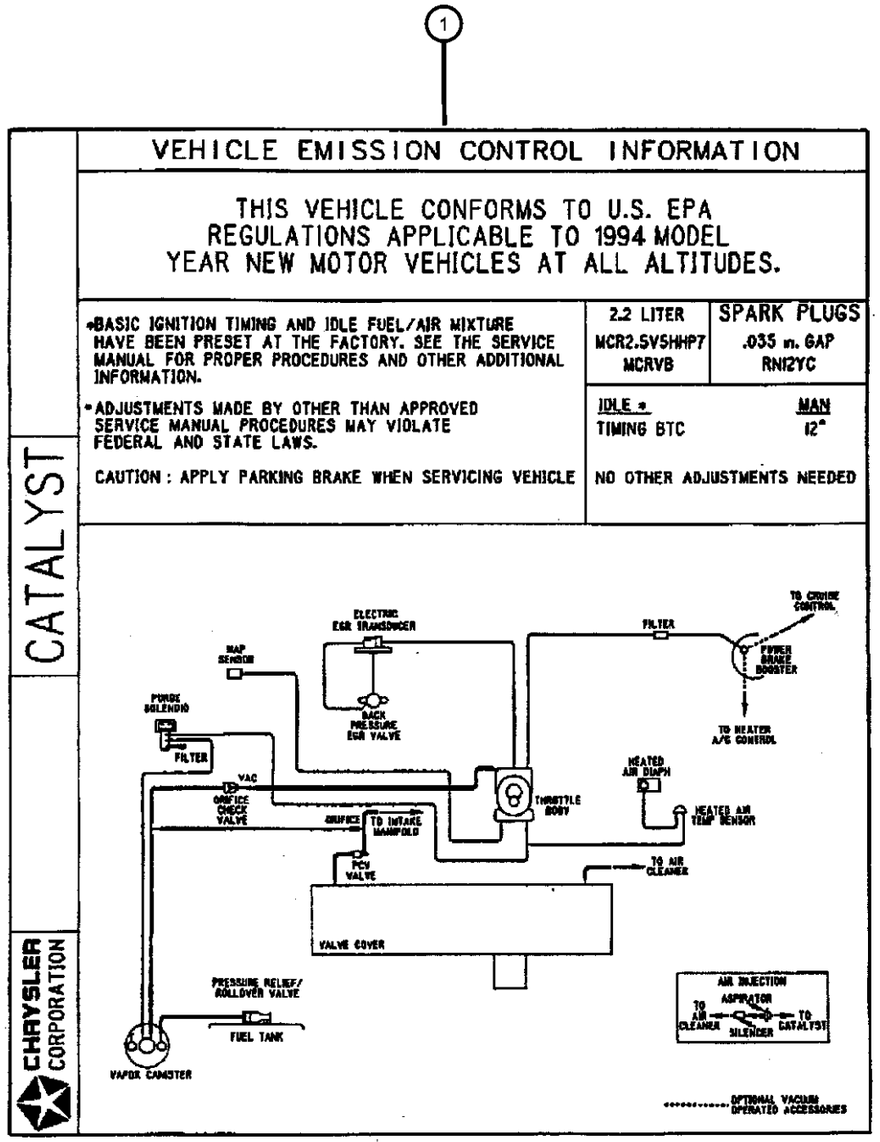

ITEM	PART NUMBER	QTY	LINE	SERIES	BODY	ENGINE	TRANS	TRIM	DESCRIPTION

Note; Sales Codes
[DHP]= Select Trac Full Time 4WD Transfer Case
[DHQ]= Quadra Trac On Demand 4WD Transfer Case
[ER0]= All 4.0L, 6 Cylinder Gas Engines
[EV0]= All 4.7L V-8 Gas Engines

1									LABEL, Emission
	52080415AA	1	J			ER0			US 50 States,Selec-Trac Full Time [DHP]
	52109730AA	1	J			ER0			Federal With [DHP]
	52109731AA	1	J			ER0			Canada With [DHP]
	52109732AA	1	J			ER0			Federal With [DHQ]
	52109734AA	1				ER0			California
	52109736AA	1	J			EVA			US 50 States
	52109738AA	1	J			EVA			
	52109740AA	1				ER0			Export
	52109741AA	1				EV0			Export

GRAND CHEROKEE (WJ)

SERIES	LINE	BODY	ENGINE	TRANSMISSION
H = Laredo	T = JEEP - 2WD	74 = SPORT UTILITY 4-DR	ERH = Engine - 4.0L Power Tech I-6	DGK = 4 Speed Auto, 42RE
M = Sport	J = JEEP - 4WD		EVA = Engine- 4.7L V8 MPI	DGQ = 5 Speed Auto, 45RFE
P = Limited	U = JEEP - 4WD (RHD)		EVC = Engine - 4.7L HO V8 MPI	DG0 = All Automatic Transmissions
S = Overland			ER0 = All 4.0L 6 Cyl. Gas	
			EV0 = All 4.7L Gas	

Vacuum Canister, 4.0 [ERH], 4.7 [EVA, EVC]
Figure 25-310

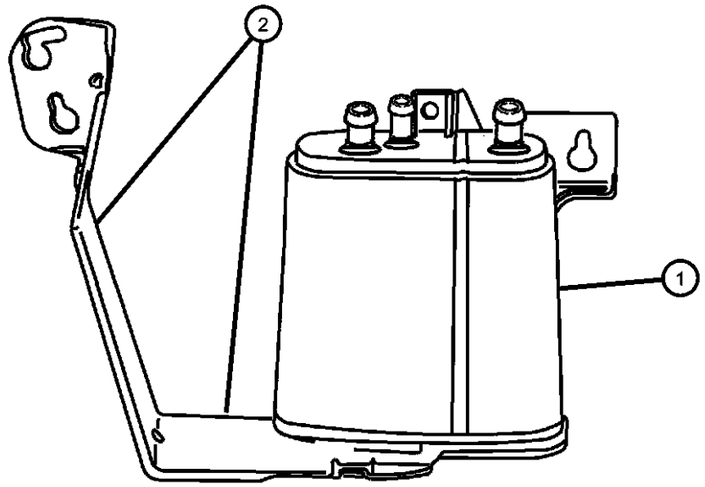

ITEM	PART NUMBER	QTY	LINE	SERIES	BODY	ENGINE	TRANS	TRIM	DESCRIPTION
Sales Codes [ER0]= All, 6 Cylinder Gas Engines [EV0]= All 4.7L V-8 Gas Engines									
1	53013096AB	1				ER0, EV0			CANISTER, Vapor
2	53013463AC	1				ER0, EV0			BRACKET, Vapor Canister
-3	52109720AA	1				ER0, EV0			BRACE, Support Bracket
-4	52100468AG	1							HOSE, Fuel Vapor
-5	52098655AJ	1							HOSE, Axle Vent

GRAND CHEROKEE (WJ)

SERIES	LINE	BODY	ENGINE	TRANSMISSION
H = Laredo M = Sport P = Limited S = Overland	T = JEEP - 2WD J = JEEP - 4WD U = JEEP - 4WD (RHD)	74 = SPORT UTILITY 4-DR	ERH = Engine - 4.0L Power Tech I-6 EVA = Engine- 4.7L V8 MPI EVC = Engine - 4.7L HO V8 MPI ER0 = All 4.0L 6 Cyl. Gas EV0 = All 4.7L Gas	DGK = 4 Speed Auto, 42RE DGQ = 5 Speed Auto, 45RFE DG0 = All Automatic Transmissions

Emission Control Vacuum Harness, 4.0 [ERH], 4.7 [EVA, EVC]
Figure 25-410

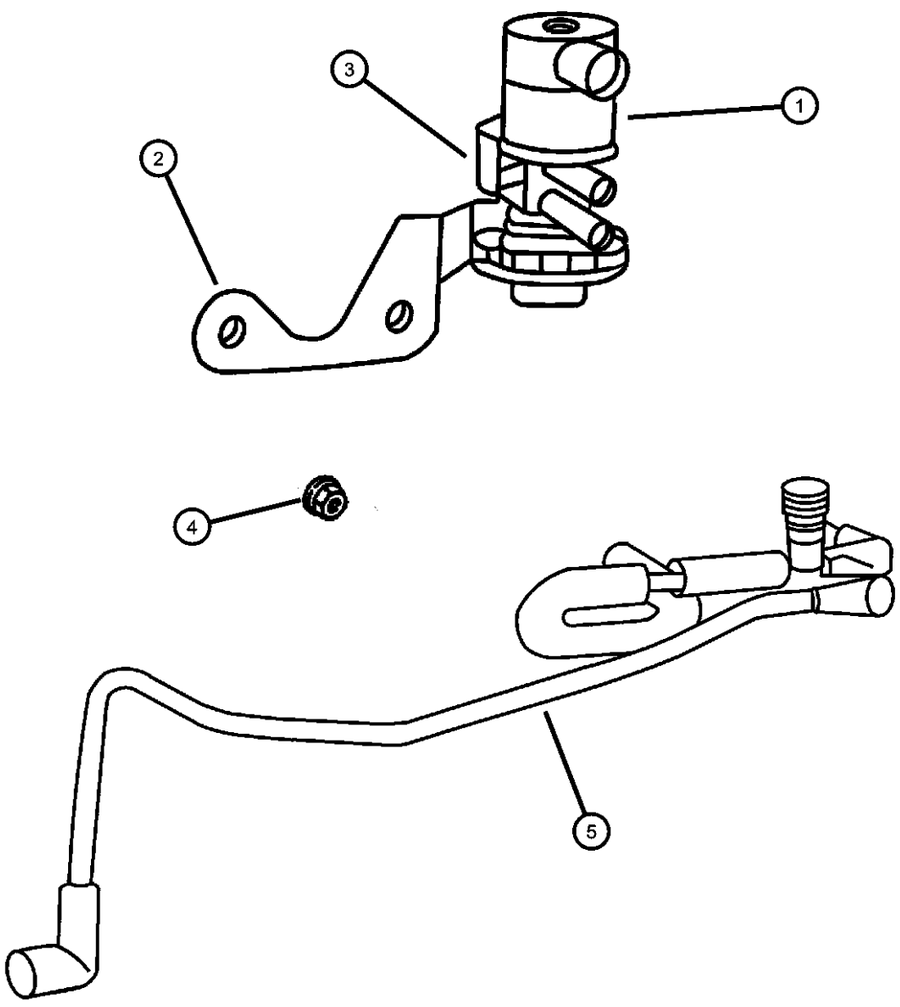

ITEM	PART NUMBER	QTY	LINE	SERIES	BODY	ENGINE	TRANS	TRIM	DESCRIPTION
Note; Sales Codes [ER0]= All 4.0L, 6 Cylinder Gas Engines [EV0]= All 4.7L V-8 Gas Engines									
1									SOLENOID, Duty Cycle Purge
	52128550AA	1				ER0			
		1				EV0			
2	53013421AB	1				ER0, EV0			BRACKET, Duty Cycle Purge Solenoid
3	53013421AB	1							BUSHING, Isolator, Serviced With Item 1, (NOT SERVICED)
4	06102160AA	2				ER0, EV0			SCREW, Hex Flange Head
5									HARNESS, Vapor Purge
	53013632AD	1				ER0			
	53013636AD	1				EV0			

GRAND CHEROKEE (WJ)

SERIES	LINE	BODY	ENGINE	TRANSMISSION
H = Laredo M = Sport P = Limited S = Overland	T = JEEP - 2WD J = JEEP - 4WD U = JEEP - 4WD (RHD)	74 = SPORT UTILITY 4-DR	ERH = Engine - 4.0L Power Tech I-6 EVA = Engine- 4.7L V8 MPI EVC = Engine - 4.7L HO V8 MPI ER0 = All 4.0L 6 Cyl. Gas EV0 = All 4.7L Gas	DGK = 4 Speed Auto, 42RE DGQ = 5 Speed Auto, 45RFE DG0 = All Automatic Transmissions

Leak Detection Pump, 4.0 [ERH], 4.7 [EVA, EVC]
Figure 25-420

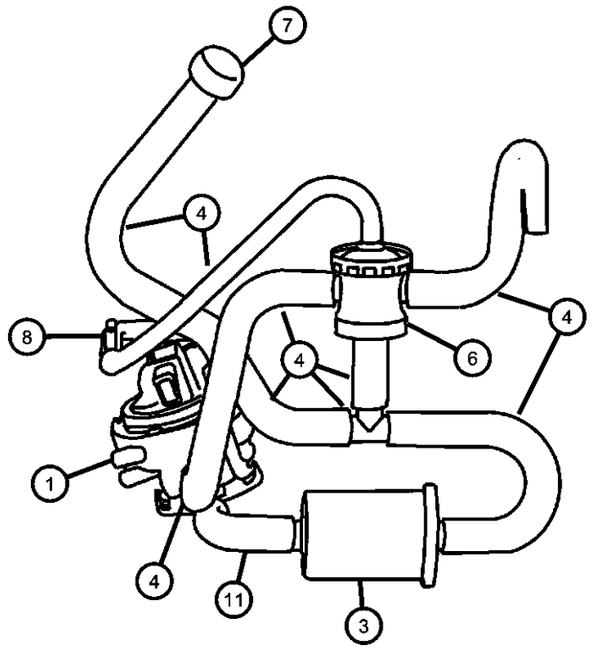

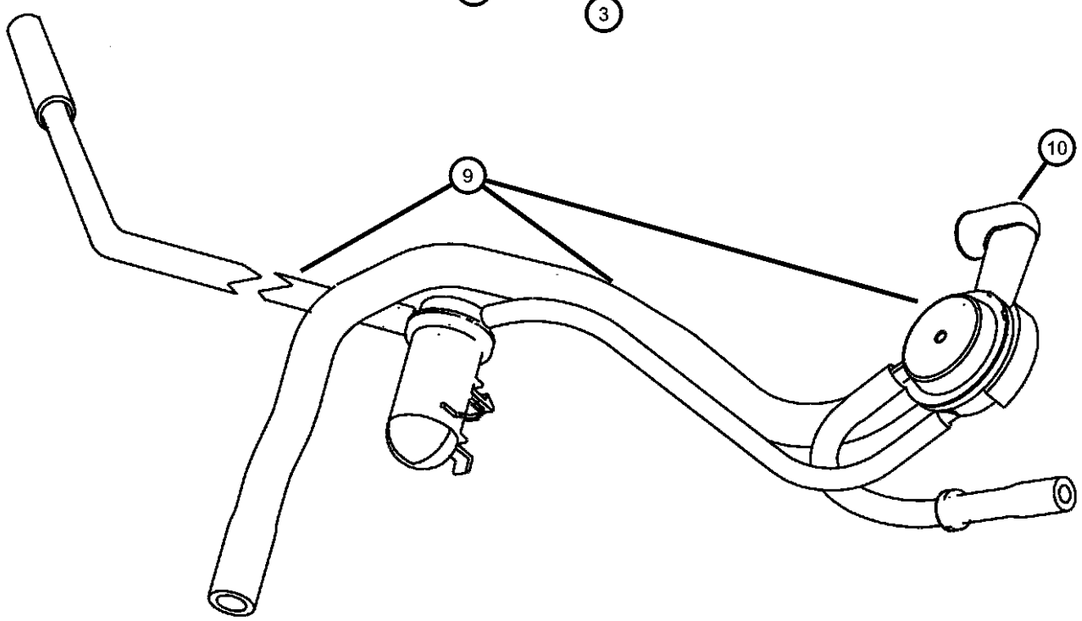

ITEM	PART NUMBER	QTY	LINE	SERIES	BODY	ENGINE	TRANS	TRIM	DESCRIPTION
Note; Sales Codes [ER0]= All 4.0L, 6 Cylinder Gas Engines [EV0]= All 4.7L V-8 Gas Engines									
1	04891414AD	1				ER0, EV0			PUMP, Leak Detection
-2	53013463AC	1				ER0, EV0			BRACKET, Vapor Canister
3	53013376AB	1				ER0, EV0			FILTER, Leak Detection Pump
4	53013640AC	1				ER0, EV0			HOSE, Leak Detection Pump
-5									CLIP, Hose
	04794205AA	1				ER0, EV0			Use This Number After 4-12-01
	52109599AA	1				ER0, EV0			Use This Number Before 4-12-01
6	04669865	1				ER0, EV0			VALVE, Vent
7	53031643AA	1				ER0, EV0			CAP, Vent Tube
8	04306994	1				ER0, EV0			TEE, Hose, .25x.25x.25
9	52100468AF	1							HOSE, Fuel Vapor
10	52098655AJ	1							HOSE, Axle Vent, Contains a Set of Three Hoses, One Hose For Rear Axle Vent One For T On LDP and One For Outlet On The Center Of Canister
11	53013646AB	1				ER0, EV0			HOSE, Leak Detection Pump to Filter

GRAND CHEROKEE (WJ)

SERIES	LINE	BODY	ENGINE	TRANSMISSION
H = Laredo M = Sport P = Limited S = Overland	T = JEEP - 2WD J = JEEP - 4WD U = JEEP - 4WD (RHD)	74 = SPORT UTILITY 4-DR	ERH = Engine - 4.0L Power Tech I-6 EVA = Engine- 4.7L V8 MPI EVC = Engine - 4.7L HO V8 MPI ER0 = All 4.0L 6 Cyl. Gas EV0 = All 4.7L Gas	DGK = 4 Speed Auto, 42RE DGQ = 5 Speed Auto, 45RFE DG0 = All Automatic Transmissions

Group - DWJ

Doors and Related Parts

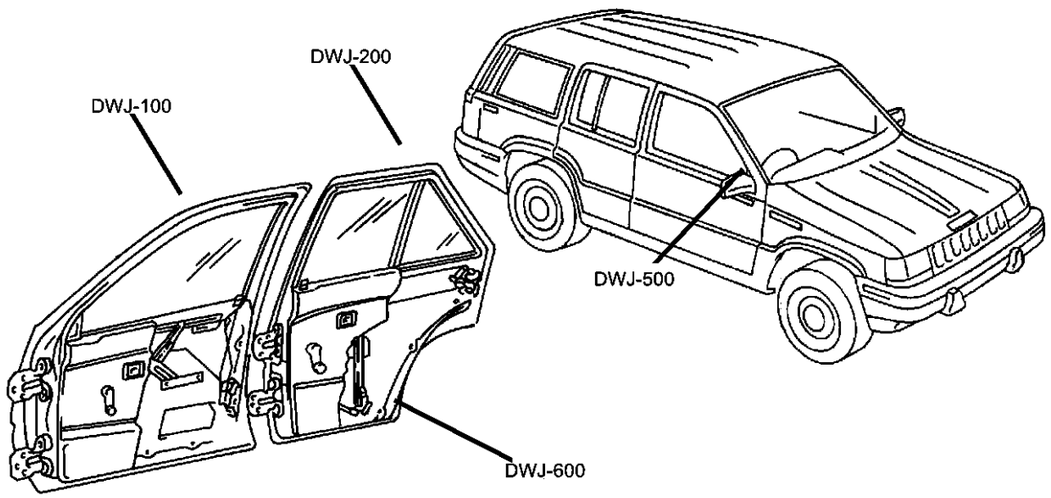

DWJ-100 Front Door	DWJ-200 Rear Door	DWJ-500 Exterior Mirror	DWJ-600 Weatherstrips and Seals
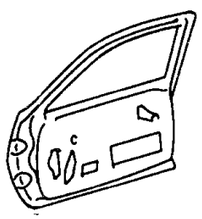	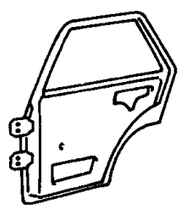	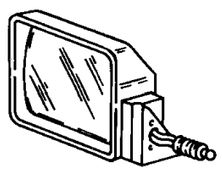	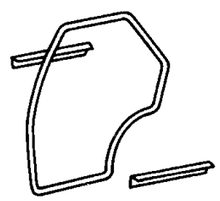

Group - DWJ Doors and Related Parts

Illustration Title — Group-Fig. No.

Front Door
Door, Front Shell and Hinges ..... Fig. DWJ - 110
Door, Front Glass and Regulators ..... Fig. DWJ - 120
Door, Front Lock and Controls ..... Fig. DWJ - 130

Rear Door
Door, Rear Shell and Hinges ..... Fig. DWJ - 210
Door, Rear Glass and Regulators ..... Fig. DWJ - 220
Door, Rear Lock and Controls ..... Fig. DWJ - 230

Exterior Mirror
Mirrors, Exterior ..... Fig. DWJ - 510

Weatherstrips and Seals
Door, Front Weatherstrips and Seals ..... Fig. DWJ - 610
Door, Rear Weatherstrips and Seals ..... Fig. DWJ - 620
Door, Rear Tail Gate Weatherstrips and Seals ..... Fig. DWJ - 630

Door, Front Shell and Hinges
Figure DWJ-110

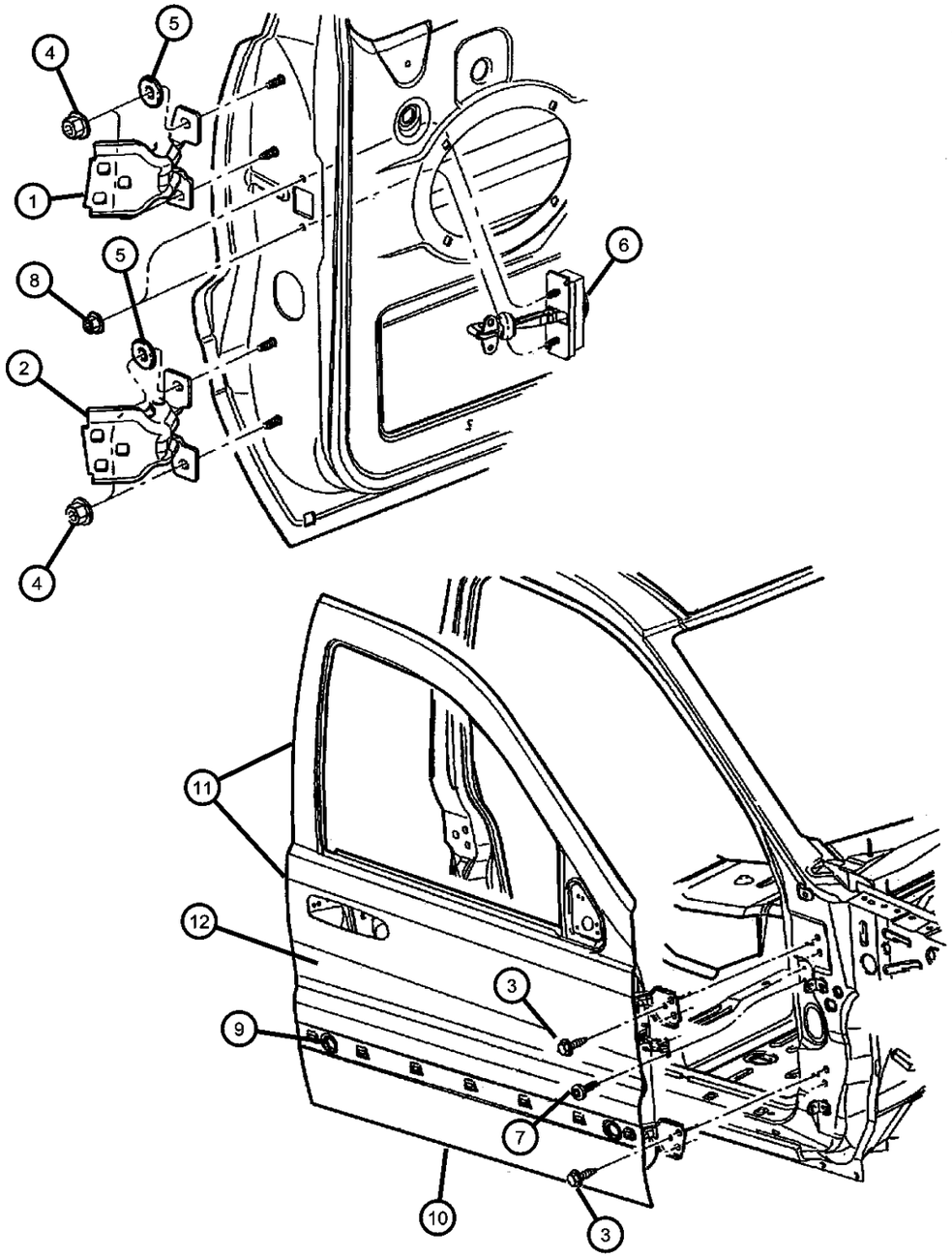

ITEM	PART NUMBER	QTY	LINE	SERIES	BODY	ENGINE	TRANS	TRIM	DESCRIPTION
1									HINGE, Door Half, Upper
	55136481AD	2							Left
	55363417AA	2							Right
2									HINGE, Door Half, Lower
	55136481AD	2							Right
	55363417AA	2							Left
3	06503328	14							SCREW, Hex Head, M8x1.25x30
4	06503328	14							NUT AND WASHER, Hex, M8x1.25, (NOT SERVICED)
5	55136971AC	4							WASHER, Flat
6									CHECK, Front Door
	55135590AC	1							Right
	55135591AC	1							Left
7	55135591AC	1							SCREW, Torx Round Head, M6-1.0x20.0, (NOT SERVICED)
8	06503504	2							NUT AND WASHER, Hex, M6x1
9	55257380AA	12							PLUG
10	02860332	4							PLUG, Anti-Rattle
11									DOOR, Front
	55135920AE	1							Right
	55135921AE	1							Left
12									PANEL, Front Door Outer Repair
	55135922AC	1							Right
	55135923AC	1							Left
-13	06505201AA	2							NUT, M5x.080x26.41

GRAND CHEROKEE (WJ)

SERIES	LINE	BODY	ENGINE	TRANSMISSION
H = Laredo M = Sport P = Limited S = Overland	T = JEEP - 2WD J = JEEP - 4WD U = JEEP - 4WD (RHD)	74 = SPORT UTILITY 4-DR	ERH = Engine - 4.0L Power Tech I-6 EVA = Engine- 4.7L V8 MPI EVC = Engine - 4.7L HO V8 MPI ER0 = All 4.0L 6 Cyl. Gas EV0 = All 4.7L Gas	DGK = 4 Speed Auto, 42RE DGQ = 5 Speed Auto, 45RFE DG0 = All Automatic Transmissions

AR = use ase required - = Non illustrrated part

Door, Front Glass and Regulators
Figure DWJ-120

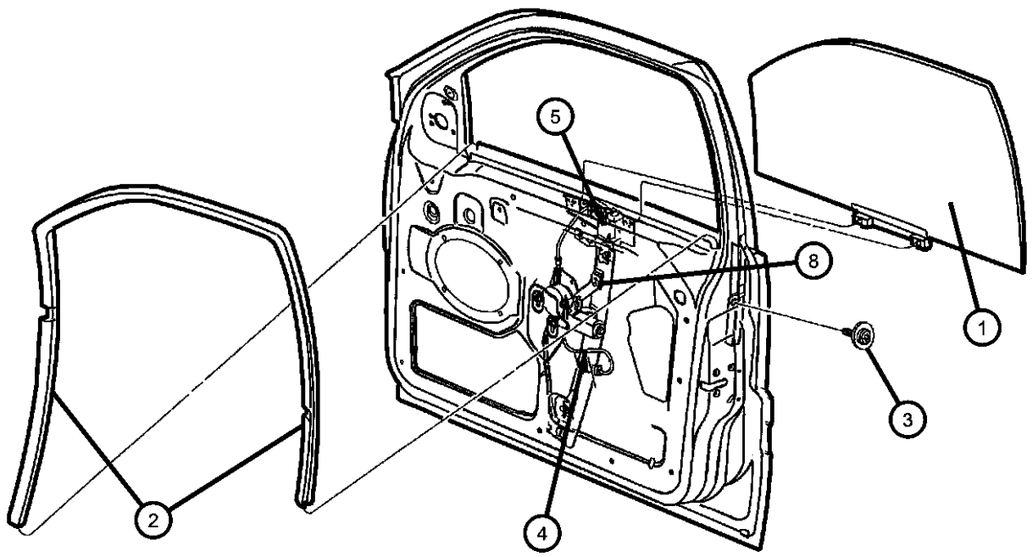

ITEM	PART NUMBER	QTY	LINE	SERIES	BODY	ENGINE	TRANS	TRIM	DESCRIPTION
1									GLASS, Front Door
	55136002AC	1							Right
	55136003AC	1							Left
2									SEAL, Front Door Glass
	55136024AE	1							Right
	55136025AE	1							Left
3	06504987AA	2							SCREW AND WASHER, Tapping, M6-1.0x20.0
4									REGULATOR, Front Door Window
	55363286AB	1							Right
	55363287AB	1							Left
5	55363287AB	1							SCREW, M6X1.00X16.00, (NOT SERVICED)
-6									CHANNEL, Front Door Glass Lower
	55136016	1							Front
	55136017	1							Rear
-7	05086563AA	1							CLIP, Regulator
8	55135934AB	1							REINFORCEMENT, Armrest Bracket Front Door

GRAND CHEROKEE (WJ)

SERIES	LINE	BODY	ENGINE	TRANSMISSION
H = Laredo M = Sport P = Limited S = Overland	T = JEEP - 2WD J = JEEP - 4WD U = JEEP - 4WD (RHD)	74 = SPORT UTILITY 4-DR	ERH = Engine - 4.0L Power Tech I-6 EVA = Engine- 4.7L V8 MPI EVC = Engine - 4.7L HO V8 MPI ER0 = All 4.0L 6 Cyl. Gas EV0 = All 4.7L Gas	DGK = 4 Speed Auto, 42RE DGQ = 5 Speed Auto, 45RFE DG0 = All Automatic Transmissions

AR = use ase required - = Non illustrrated part

Door, Front Lock and Controls
Figure DWJ-130

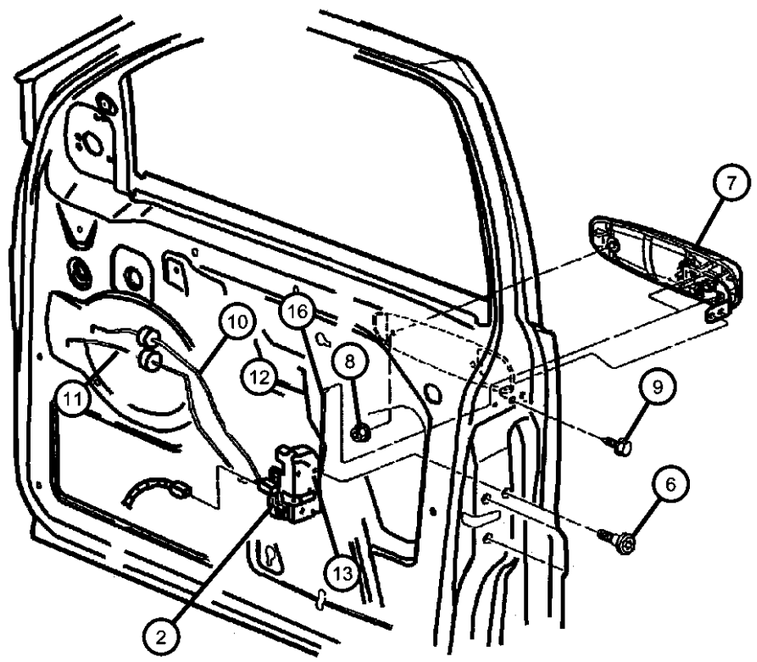

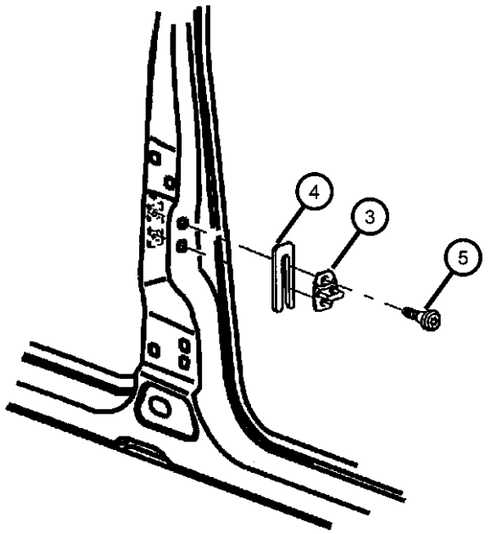

ITEM	PART NUMBER	QTY	LINE	SERIES	BODY	ENGINE	TRANS	TRIM	DESCRIPTION
-1									HANDLE, Door Interior
	5FX721DVAC	1		H					[DV], Right
	5FX721L5AC	1		H					[L5], Right
	5FX721T5AC	1		H					[T5], Right
	5FX731DVAC	1		H					[DV], Left
	5FX731L5AC	1		H					[L5], Left
	5FX731T5AC	1		H					[T5], Left
	5FX741DVAC	1		P					[DV], Right
	5FX741L5AC	1		P					[L5], Right
	5FX741T5AC	1		P					[T5], Right
	5FX741DBAD	1		S					[DB], Right
	5FX751L5AC	1		P					[L5], Left
	5FX751T5AC	1		P					[T5], Left
	5FX751DBAD	1		S					[DB], Left
2									LATCH, Front Door
	55363472AB	1							w/o Cylinder Lock, Right
	55363473AA	1							w/Cylinder Lock, Left
3	04780607AA	2							STRIKER, Door
4	04520289	AR							SPACER, Door Latch Striker
5	06504573	4							SCREW, Oval Head, SCREW
6	06033876	6							SCREW, Tapping, M6.3x1.8x38.1
7									HANDLE, Exterior Door
	0QR38DX8AC	1		P, S					[X8], Right
	0QR38SW1AC	1		P, S					[W1], Right
	0QR38WB-TAC	1		P, S					[BT], Right
	0QR38WELAC	1		P, S					[EL], Right
	0QR38XBQAC	1		P, S					[BQ], Right
	0QR38XR-VAC	1		P, S					[RV], Right
	0QR38XS5AC	1		P, S					[S5], Right
	0QR38YJRAC	1		P, S					[JR], Right
	0QR38YUBAC	1		P, S					[UB], Right
	0QR38ZDRAC	1		P, S					[DR], Right

GRAND CHEROKEE (WJ)

SERIES	LINE	BODY	ENGINE	TRANSMISSION
H = Laredo M = Sport P = Limited S = Overland	T = JEEP - 2WD J = JEEP - 4WD U = JEEP - 4WD (RHD)	74 = SPORT UTILITY 4-DR	ERH = Engine - 4.0L Power Tech I-6 EVA = Engine- 4.7L V8 MPI EVC = Engine - 4.7L HO V8 MPI ER0 = All 4.0L 6 Cyl. Gas EV0 = All 4.7L Gas	DGK = 4 Speed Auto, 42RE DGQ = 5 Speed Auto, 45RFE DG0 = All Automatic Transmissions

AR = use ase required - = Non illustrrated part

Door, Front Lock and Controls
Figure DWJ-130

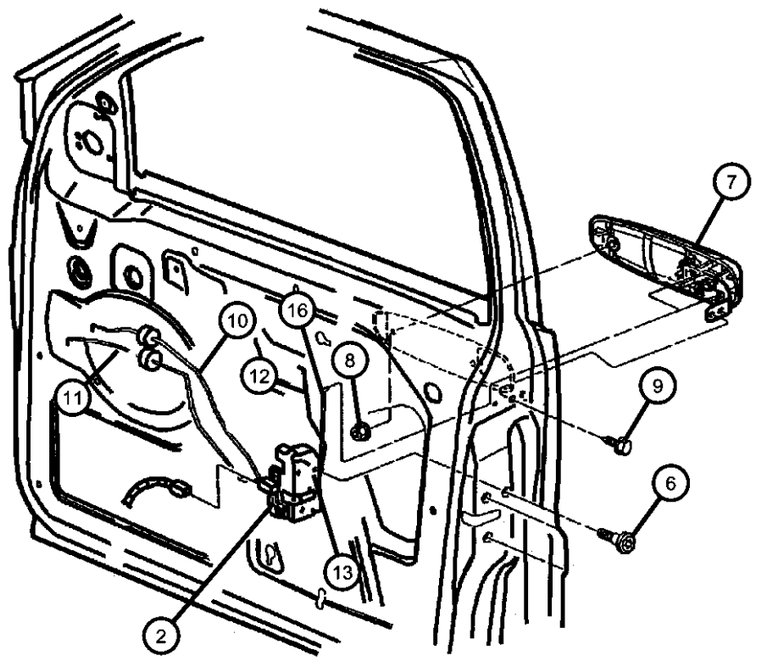

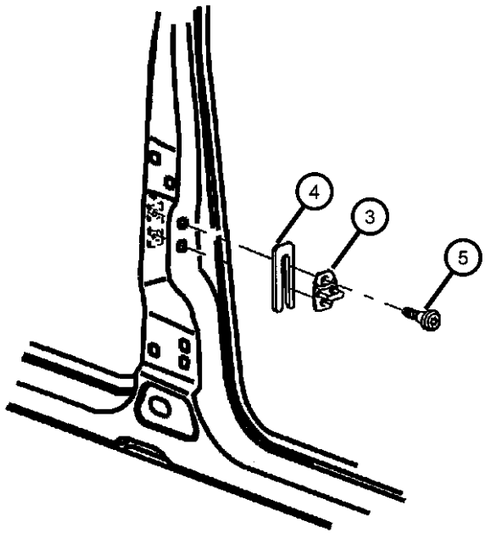

ITEM	PART NUMBER	QTY	LINE	SERIES	BODY	ENGINE	TRANS	TRIM	DESCRIPTION
	55135636AD	1		H					Right
	55136351AD	1		H					Left
	5GG27DX8AB	1		P, S					[X8], Left
	5GG27SW1AB	1		P, S					[W1], Left
	5GG27WBTAB	1		P, S					[BT], Left
	5GG27WE-LAB	1		P, S					[EL], Left
	5GG27XBQAB	1		P, S					[BQ], Left
	5GG27XRVAB	1		P, S					[RV], Left
	5GG27XS5AB	1		P, S					[S5], Left
	5GG27YJRAB	1		P, S					[JR], Left
	5GG27YUBAB	1		P, S					[UB], Left
	5GG27ZDRAB	1		P, S					[DR], Left
8	06503226	4							NUT, Hex Flange, M5x.8
9	06505365AA	2							SCREW
10									ROD, Inside Handle to Latch
	05014378AA	1							Right
	05014379AA	1							Left
11									ROD, Inside Lock to Latch
	05014380AA	1							Right
	05014381AA	1							Left
12									LINK, Exterior Door Handle
	05014372AA	1							Right
	05014373AA	1							Left
13									COVER, Latch-Anti Theft
	05014395AA	1							Right
	05014396AA	1							Left
-14									CLIP, Latch
	05014397AA	1							Purple, Right
	05014398AA	1							Orange, Left
-15	04658444	1							CLIP, Latch, Orange, Key Cylinder To Latch
16	05014387AA	1							LINK, Key Cylinder To LatchLeft

GRAND CHEROKEE (WJ)

SERIES	LINE	BODY	ENGINE	TRANSMISSION
H = Laredo M = Sport P = Limited S = Overland	T = JEEP - 2WD J = JEEP - 4WD U = JEEP - 4WD (RHD)	74 = SPORT UTILITY 4-DR	ERH = Engine - 4.0L Power Tech I-6 EVA = Engine- 4.7L V8 MPI EVC = Engine - 4.7L HO V8 MPI ER0 = All 4.0L 6 Cyl. Gas EV0 = All 4.7L Gas	DGK = 4 Speed Auto, 42RE DGQ = 5 Speed Auto, 45RFE DG0 = All Automatic Transmissions

AR = use ase required - = Non illustrrated part

Door, Rear Shell and Hinges
Figure DWJ-210

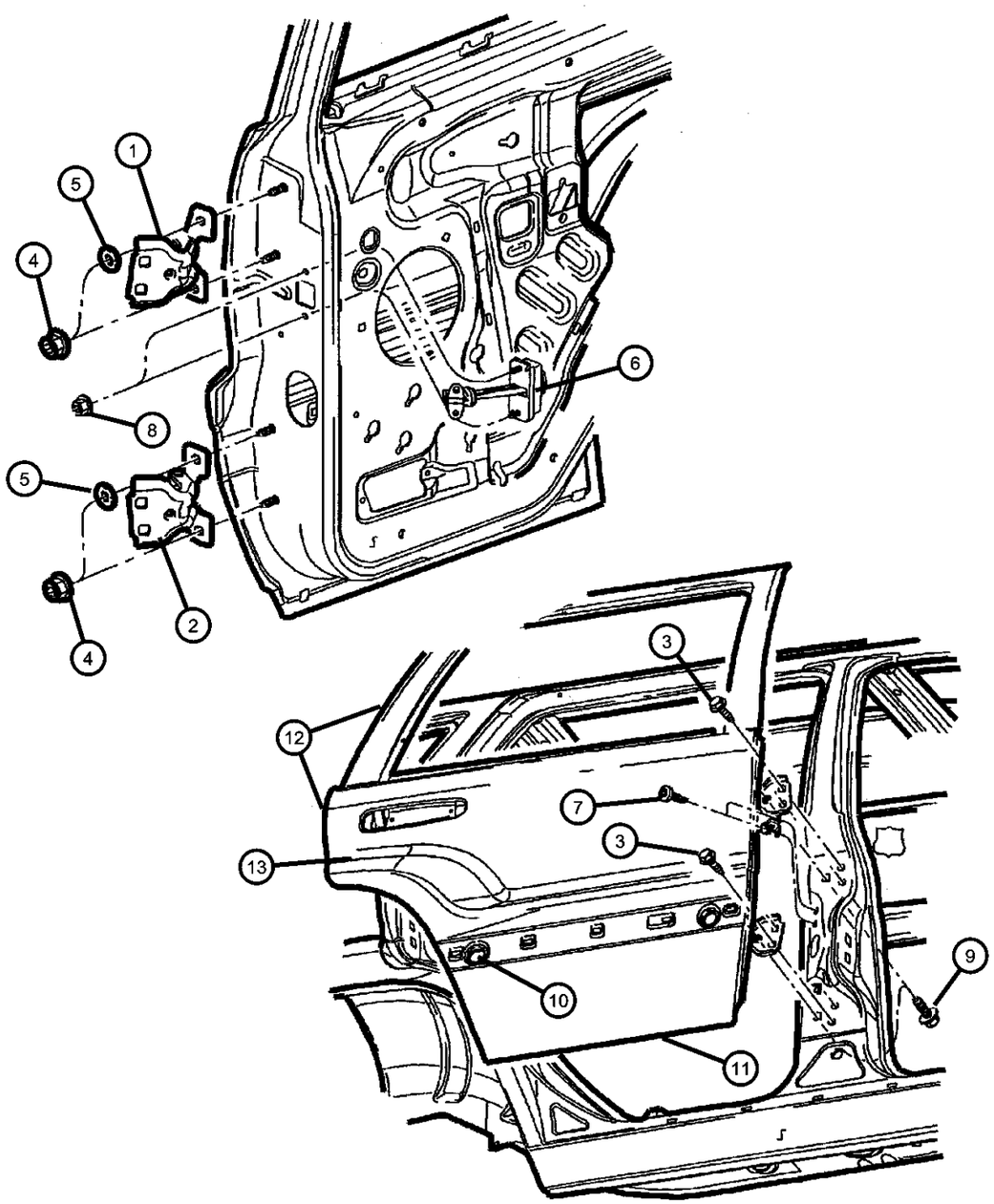

ITEM	PART NUMBER	QTY	LINE	SERIES	BODY	ENGINE	TRANS	TRIM	DESCRIPTION
1									HINGE, Door Half, Upper
	55135575AD	2							Left
	55363416AA	2							Right
2									HINGE, Door Half, Lower
	55135575AD	2							Right
	55363416AA	2							Left
3	06503328	14							SCREW, Hex Head, M8x1.25x30
4	06503328	14							NUT AND WASHER, Hex, M8x1.25, (NOT SERVICED)
5	55136971AC	4							WASHER, Flat
6									CHECK, Rear Door
	55135658AB	1							Right
	55135659AB	1							Left
7	55135659AB	1							SCREW, Torx Head, M6x1.00x16.00, (NOT SERVICED)
8	06503504	2							NUT AND WASHER, Hex, M6x1
9	06503538	4							SCREW AND WASHER, Hex Head, M8x1.25x30
10	55257380AA	12							PLUG
11	02860332	4							PLUG, Anti-Rattle
12									DOOR, Rear
	55136700AE	1							Right
	55136701AE	1							Left
13									PANEL, Rear Door
	55136702AC	1							Right
	55136703AC	1							Left
-14	55136703AC	1							NUT, Rivet, M5x.080x26.41, (NOT SERVICED)

GRAND CHEROKEE (WJ)

SERIES	LINE	BODY	ENGINE	TRANSMISSION
H = Laredo	T = JEEP - 2WD	74 = SPORT UTILITY 4-DR	ERH = Engine - 4.0L Power Tech I-6	DGK = 4 Speed Auto, 42RE
M = Sport	J = JEEP - 4WD		EVA = Engine- 4.7L V8 MPI	DGQ = 5 Speed Auto, 45RFE
P = Limited	U = JEEP - 4WD (RHD)		EVC = Engine - 4.7L HO V8 MPI	DG0 = All Automatic Transmissions
S = Overland			ER0 = All 4.0L 6 Cyl. Gas	
			EV0 = All 4.7L Gas	

AR = use ase required - = Non illustrrated part

Door, Rear Glass and Regulators
Figure DWJ-220

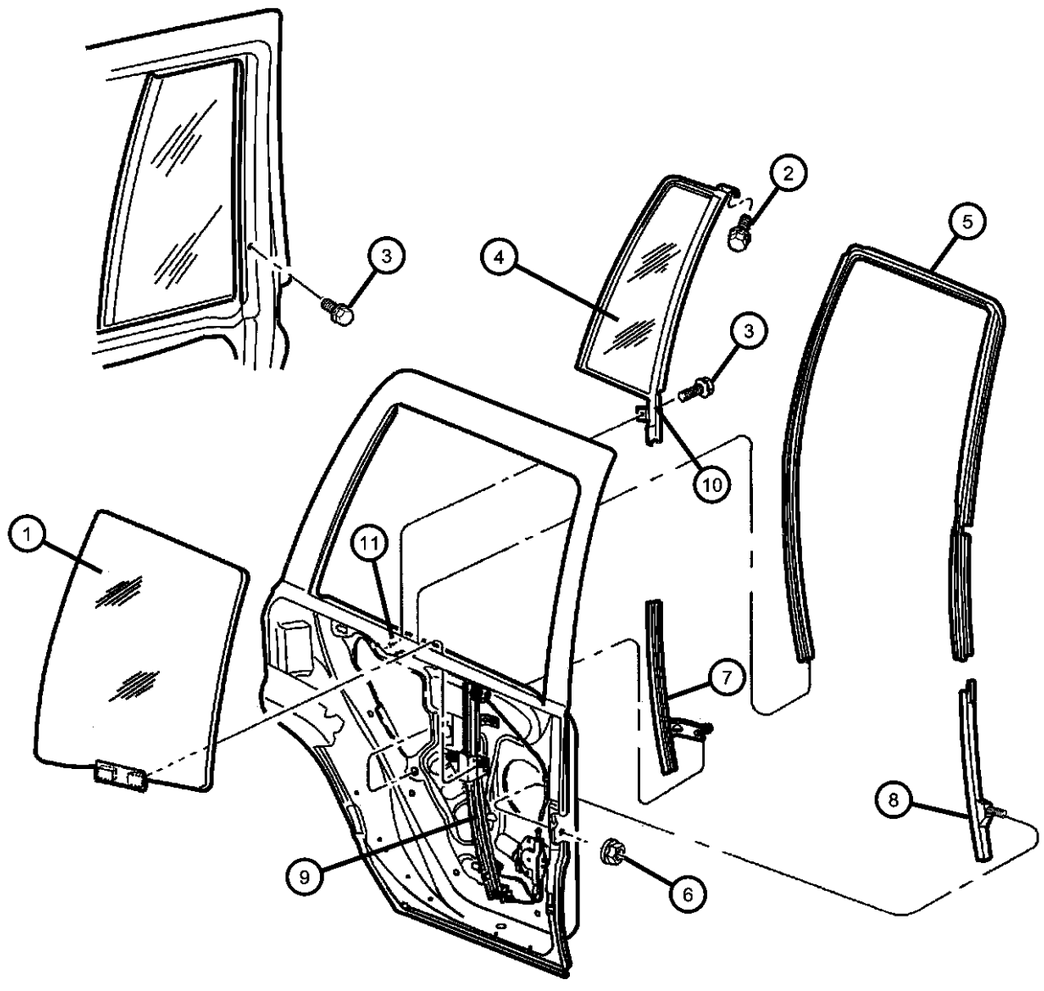

ITEM	PART NUMBER	QTY	LINE	SERIES	BODY	ENGINE	TRANS	TRIM	DESCRIPTION
1									GLASS, Rear Door
	55136064	1							Sunscreen, Right
	55136065	1							Sunscreen, Left
2	55136065	1							SCREW, Tapping, .164-15x.75, (NOT SERVICED),
3	55136065	1							SCREW, Hex Flange Head, [.164-18x.75], (NOT SERVICED)
4									GLASS PACKAGE, Rear Door Qtr
	05016914AD	1							Sunscreen, Right
	05016915AD	1							Sunscreen, Left
5									SEAL, Rear Door Glass
	55136080AF	1							Right
	55136081AF	1							Left
6	06503504	2							NUT AND WASHER, Hex, M6x1
7									CHANNEL, Rear Door Glass Lower
	55137102AA	1							Right
	55137103AA	1							Left
8									CHANNEL, Rear Door Glass Lower
	55136716	1							Right
	55136717	1							Left
9									REGULATOR, Rear Door Window
	55363284AB	1							Right
	55363285AB	1							Left
10	55137006AB	1							CLIP
11	06505223AA	2							NUT, Spring, M6
-12	05086563AA	1							CLIP, Regulator
-13									TAPE, Anti Chip
	55156736AA	2		H					
	55156736AB	2		P, S					

GRAND CHEROKEE (WJ)

SERIES	LINE	BODY	ENGINE	TRANSMISSION
H = Laredo M = Sport P = Limited S = Overland	T = JEEP - 2WD J = JEEP - 4WD U = JEEP - 4WD (RHD)	74 = SPORT UTILITY 4-DR	ERH = Engine - 4.0L Power Tech I-6 EVA = Engine- 4.7L V8 MPI EVC = Engine - 4.7L HO V8 MPI ER0 = All 4.0L 6 Cyl. Gas EV0 = All 4.7L Gas	DGK = 4 Speed Auto, 42RE DGQ = 5 Speed Auto, 45RFE DG0 = All Automatic Transmissions

Door, Rear Lock and Controls
Figure DWJ-230

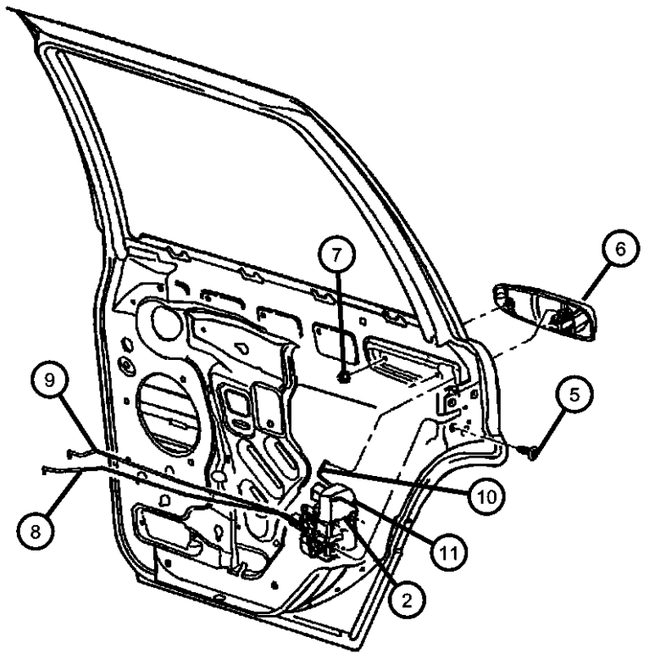

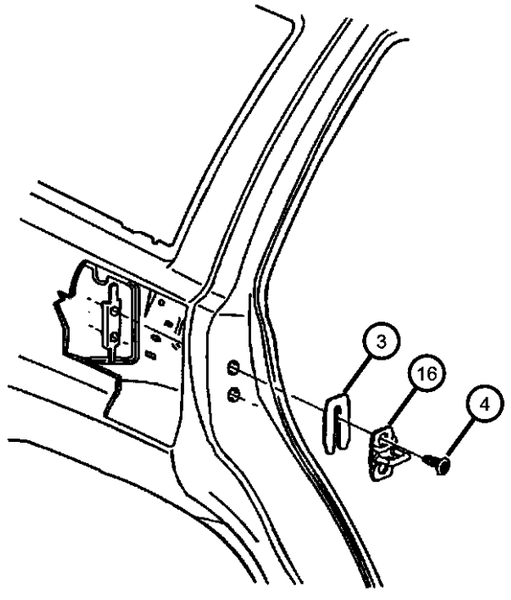

ITEM	PART NUMBER	QTY	LINE	SERIES	BODY	ENGINE	TRANS	TRIM	DESCRIPTION
-1									HANDLE, Door Interior
	5FX721DVAC	1		H					[DV], Right
		1		M					[DV], Right
	5FX721L5AC	1		H					[L5], Right
		1		M					[L5], Right
	5FX721T5AC	1		H					[T5], Right
		1		M					[T5], Right
	5FX731DVAC	1		H					[DV], Left
		1		M					[DV], Left
	5FX731L5AC	1		H					[L5], Left
		1		M					[L5], Left
	5FX731T5AC	1		H					[T5], Left
		1		M					[T5], Left
	5FX741L5AC	1		P					[L5], Right
	5FX741T5AC	1		P					[T5], Right
	5FX741DBAD	1		S					[DB], Right
	5FX741DVAD	1		P					[DV], Right
	5FX751DBAD	1		S					[DB], Left
	5FX751DVAD	1		P					[DV], Left
	5FX751L5AD	1		P					[L5], Left
	5FX751T5AD	1		P					[T5], Left
2									LATCH, Rear Door
	55135620AB	1							Right
	55135621AB	1							Left
3	04520289	AR							SPACER, Door Latch Striker
4	06504573	4							SCREW, Oval Head, SCREW
5	06504573	4							SCREW, Tapping, M6.3x1.8x38.1, (NOT SERVICED)
6									HANDLE, Exterior Door
	55135838AD	1		H, M					Right
	55135839AD	1		H, M					Left
	5FW46DX8AB	1		P, S					[X8], Right
	5FW46SW1AB	1		P, S					[W1], Right
	5FW46WBTAB	1		P, S					[BT], Right

GRAND CHEROKEE (WJ)

SERIES	LINE	BODY	ENGINE	TRANSMISSION
H = Laredo M = Sport P = Limited S = Overland	T = JEEP - 2WD J = JEEP - 4WD U = JEEP - 4WD (RHD)	74 = SPORT UTILITY 4-DR	ERH = Engine - 4.0L Power Tech I-6 EVA = Engine- 4.7L V8 MPI EVC = Engine - 4.7L HO V8 MPI ER0 = All 4.0L 6 Cyl. Gas EV0 = All 4.7L Gas	DGK = 4 Speed Auto, 42RE DGQ = 5 Speed Auto, 45RFE DG0 = All Automatic Transmissions

AR = use ase required - = Non illustrrated part

Door, Rear Lock and Controls
Figure DWJ-230

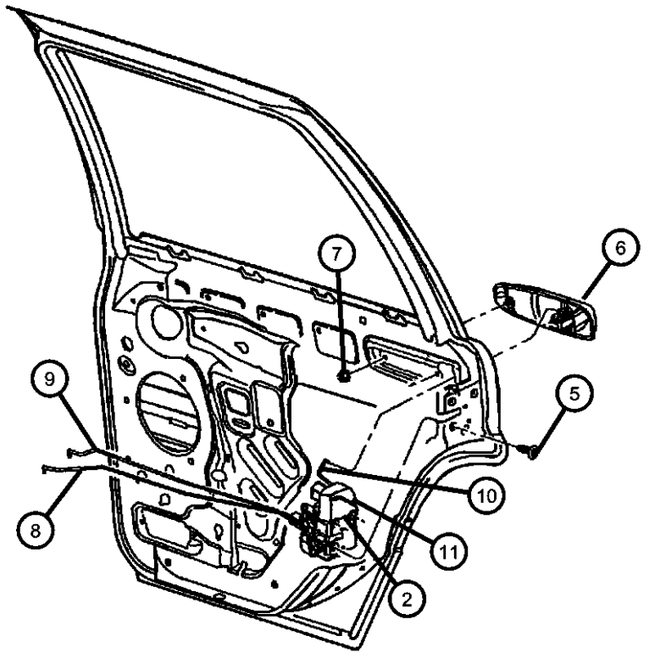

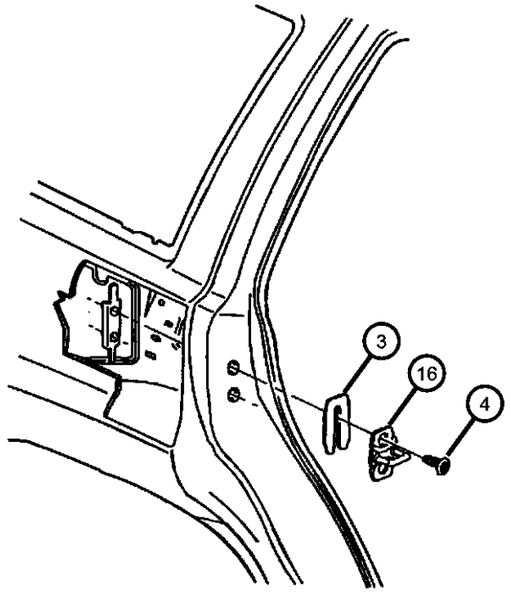

ITEM	PART NUMBER	QTY	LINE	SERIES	BODY	ENGINE	TRANS	TRIM	DESCRIPTION
	5FW46WE-LAB	1		P, S					[EL], Right
	5FW46XBQAB	1		P, S					[BQ], Right
	5FW46XRVAB	1		P, S					[RV], Right
	5FW46XS5AB	1		P, S					[S5], Right
	5FW46YJRAB	1		P, S					[JR], Right
	5FW46ZDRAB	1		P, S					[DR], Right
	5FW46YUBAC	1		P, S					[UB], Right
	5FW47DX8AC	1		P, S					[X8], Left
	5FW47SW1AC	1		P, S					[W1], Left
	5FW47WB-TAC	1		P, S					[BT], Left
	5FW47WELAC	1		P, S					[EL], Left
	5FW47XBQAC	1		P, S					[BQ], Left
	5FW47XR-VAC	1		P, S					[RV], Left
	5FW47XS5AC	1		P, S					[S5], Left
	5FW47YJRAC	1		P, S					[JR], Left
	5FW47YUBAC	1		P, S					[UB], Left
	5FW47ZDRAC	1		P, S					[DR], Left
7	06503226	4							NUT, Hex Flange, M5x.8
8									ROD, Inside Handle to Latch
	05014384AA	1							Right
	05014385AA	1							Left
9									ROD, Inside Lock to Latch
	05014382AA	1							Right
	05014383AA	1							Left
10									LINK, Exterior Door Handle
	05014376AA	1							Right
	05014377AA	1							Left
11									COVER, Latch-Anti Theft
	05014395AA	1							Right
	05014396AA	1							Left
-12	05014397AA	1							CLIP, Latch, Purple

GRAND CHEROKEE (WJ)

SERIES	LINE	BODY	ENGINE	TRANSMISSION
H = Laredo M = Sport P = Limited S = Overland	T = JEEP - 2WD J = JEEP - 4WD U = JEEP - 4WD (RHD)	74 = SPORT UTILITY 4-DR	ERH = Engine - 4.0L Power Tech I-6 EVA = Engine- 4.7L V8 MPI EVC = Engine - 4.7L HO V8 MPI ER0 = All 4.0L 6 Cyl. Gas EV0 = All 4.7L Gas	DGK = 4 Speed Auto, 42RE DGQ = 5 Speed Auto, 45RFE DG0 = All Automatic Transmissions

Door, Rear Lock and Controls
Figure DWJ-230

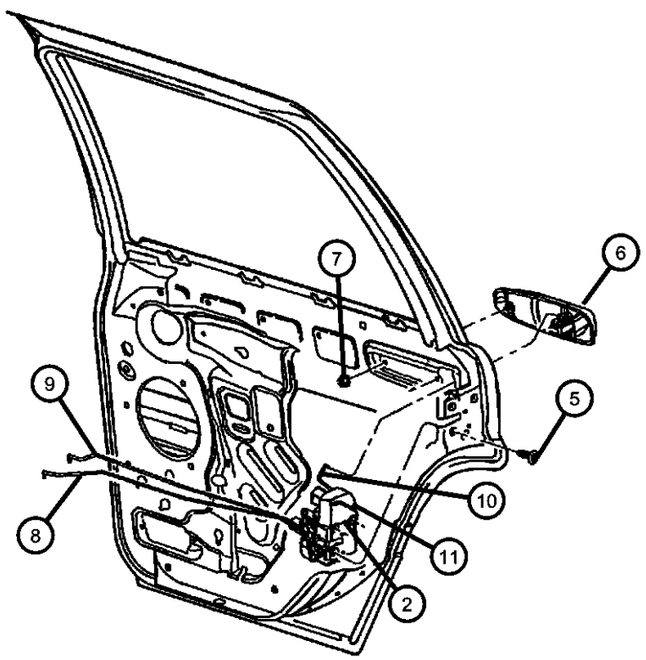

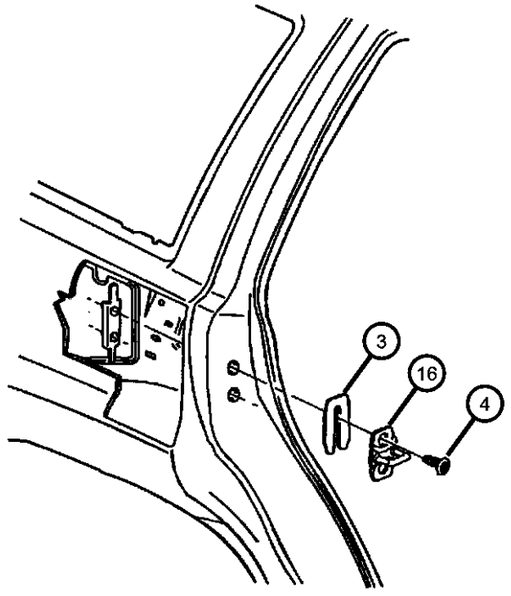

ITEM	PART NUMBER	QTY	LINE	SERIES	BODY	ENGINE	TRANS	TRIM	DESCRIPTION
-13	05014398AA	1							CLIP, Latch, Orange
-14	05014398AA	1							CLIP, Latch Link, (NOT SERVICED)
-15	05014398AA	1							CLIP, Latch Link, (NOT SERVICED)
16	04780607AA	2							STRIKER, Door

GRAND CHEROKEE (WJ)

SERIES	LINE	BODY	ENGINE	TRANSMISSION
H = Laredo M = Sport P = Limited S = Overland	T = JEEP - 2WD J = JEEP - 4WD U = JEEP - 4WD (RHD)	74 = SPORT UTILITY 4-DR	ERH = Engine - 4.0L Power Tech I-6 EVA = Engine- 4.7L V8 MPI EVC = Engine - 4.7L HO V8 MPI ER0 = All 4.0L 6 Cyl. Gas EV0 = All 4.7L Gas	DGK = 4 Speed Auto, 42RE DGQ = 5 Speed Auto, 45RFE DG0 = All Automatic Transmissions

Mirrors, Exterior
Figure DWJ-510

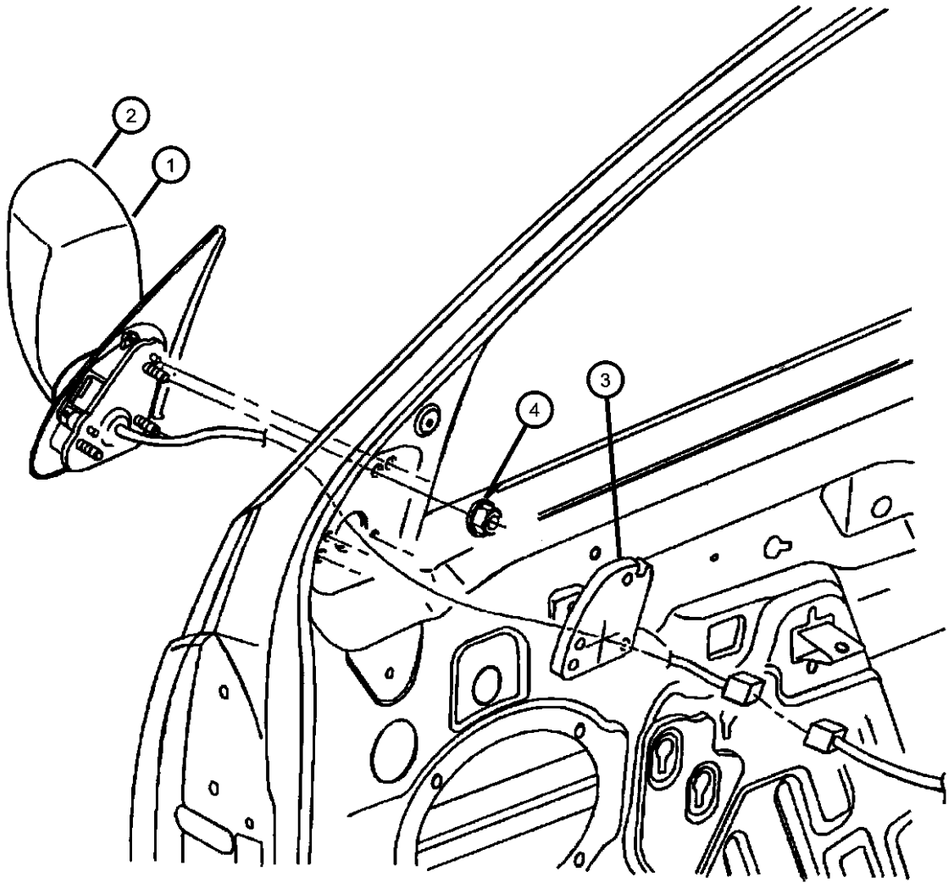

ITEM	PART NUMBER	QTY	LINE	SERIES	BODY	ENGINE	TRANS	TRIM	DESCRIPTION
Note: Sales Code GTF = Power Fold-Away									
Note: Sales Code GTN = Power Fold-Away									
Note: Sales Code GTM = Power Fold-Away Heated									
Note: Sales Code GTR = Power Fold-Away									
Note: Sales Code GTW = Power Fold-Away Black									
Note: Sales Code GT3 = Power Fold-Away Hea									
1									MIRROR, Outside, Rearview, Electric, Heated
	55155230AB	1							[GT3], Right
	55155231AB	1							[GT3], Left
	55155232AC	1							[GTM], Right
	55155233AC	1							[GTM], Left
2									MIRROR, Outside Rearview Electric Foldaway
	55155446AB	1							[GTN], Right
	55155447AB	1							[GTN], Left
3									SEAL, Mirror
	55136274AB	1							Right
	55136275AB	1							Left
4	J4200408	6							NUT AND WASHER, Hex Nut-Coned Washer, M5 x 0.80
-5									GLASS, Mirror Replacement
	05013636AA	1							[GTN], Right
	05013637AA	1							[GTN], Left
	05017072AA	1							[GT3], Right
		1							[GTM], Right
	05017073AA	1							[GTM], Left
	05017075AA	1							[GT3], Left

GRAND CHEROKEE (WJ)

SERIES	LINE	BODY	ENGINE	TRANSMISSION
H = Laredo M = Sport P = Limited S = Overland	T = JEEP - 2WD J = JEEP - 4WD U = JEEP - 4WD (RHD)	74 = SPORT UTILITY 4-DR	ERH = Engine - 4.0L Power Tech I-6 EVA = Engine- 4.7L V8 MPI EVC = Engine - 4.7L HO V8 MPI ER0 = All 4.0L 6 Cyl. Gas EV0 = All 4.7L Gas	DGK = 4 Speed Auto, 42RE DGQ = 5 Speed Auto, 45RFE DG0 = All Automatic Transmissions

Door, Front Weatherstrips and Seals
Figure DWJ-610

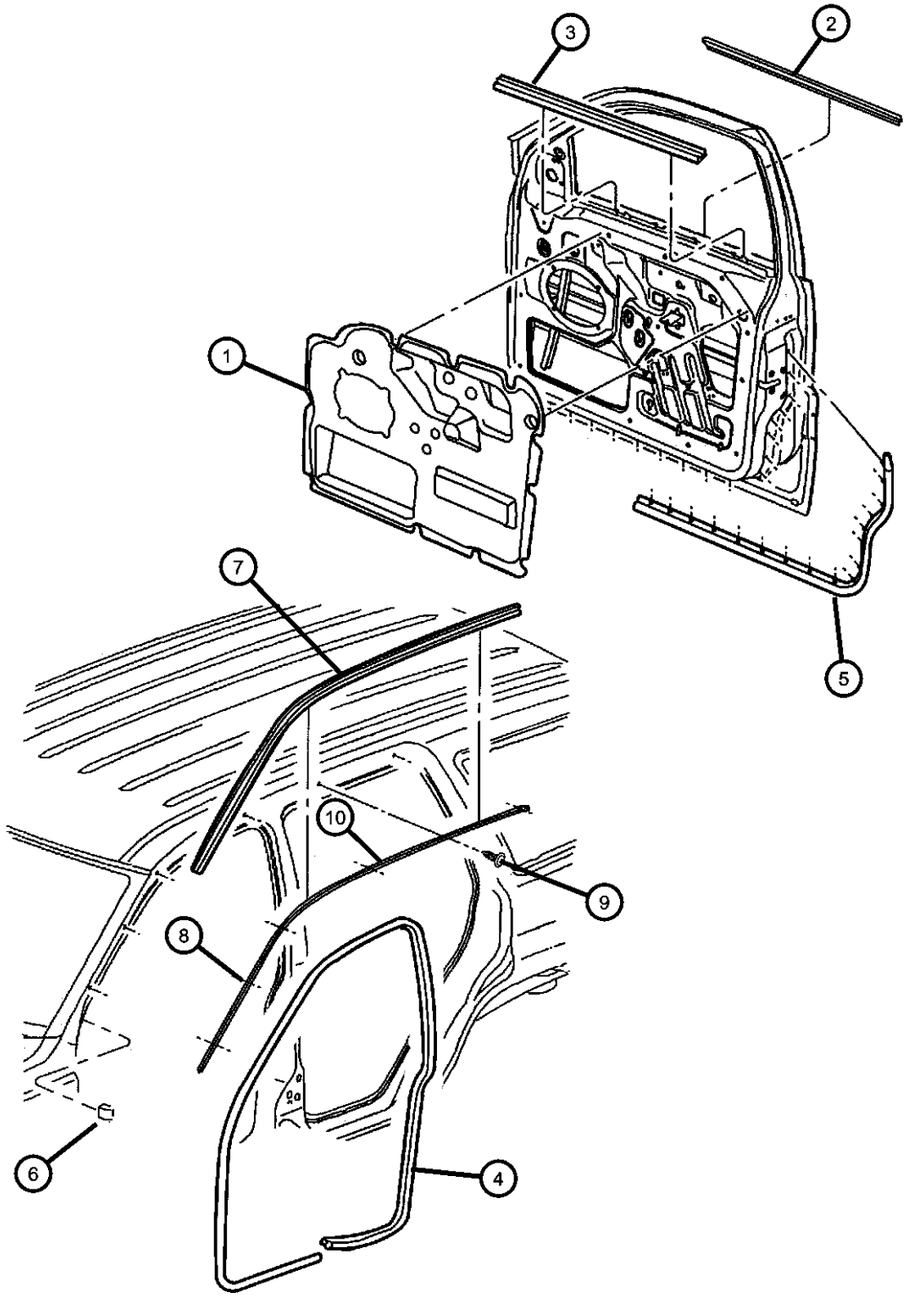

ITEM	PART NUMBER	QTY	LINE	SERIES	BODY	ENGINE	TRANS	TRIM	DESCRIPTION
1									INSULATOR, Front Door
	55135875AG	1							Left
	55135874AG	1							Right
2									WEATHERSTRIP, Front Door Belt, Outer
	55135878AC	1							Right
	55135879AC	1							Left
3									WEATHERSTRIP, Front Door Belt, Inner
	55135898AC	1							Right
	55135899AC	1							Left
4									SEAL, Front Door
	55135918AG	1							Right
	55135919AG	1							Left
5									SEAL, Front Door
	55136114AB	1							Right
	55136115AB	1							Left
6	55135678	2							BLOCKER, Seal Exterior A PillarRight
7									SEAL, Body Side
	55135869AC	1							Right
	55135872AC	1							Left
8									MOLDING, Windshield, Retainer
	55136902AE	1							Right
	55136903AE	1							Left
9	55136903AE	1							SCREW, Tapping, .164-18x.437, 06033605, (NOT SERVICED)
10									RETAINER
	55136900AB	1							Right Rear
	55136901AB	1							Left Rear

GRAND CHEROKEE (WJ)

SERIES	LINE	BODY	ENGINE	TRANSMISSION
H = Laredo M = Sport P = Limited S = Overland	T = JEEP - 2WD J = JEEP - 4WD U = JEEP - 4WD (RHD)	74 = SPORT UTILITY 4-DR	ERH = Engine - 4.0L Power Tech I-6 EVA = Engine- 4.7L V8 MPI EVC = Engine - 4.7L HO V8 MPI ER0 = All 4.0L 6 Cyl. Gas EV0 = All 4.7L Gas	DGK = 4 Speed Auto, 42RE DGQ = 5 Speed Auto, 45RFE DG0 = All Automatic Transmissions

Door, Rear Weatherstrips and Seals
Figure DWJ-620

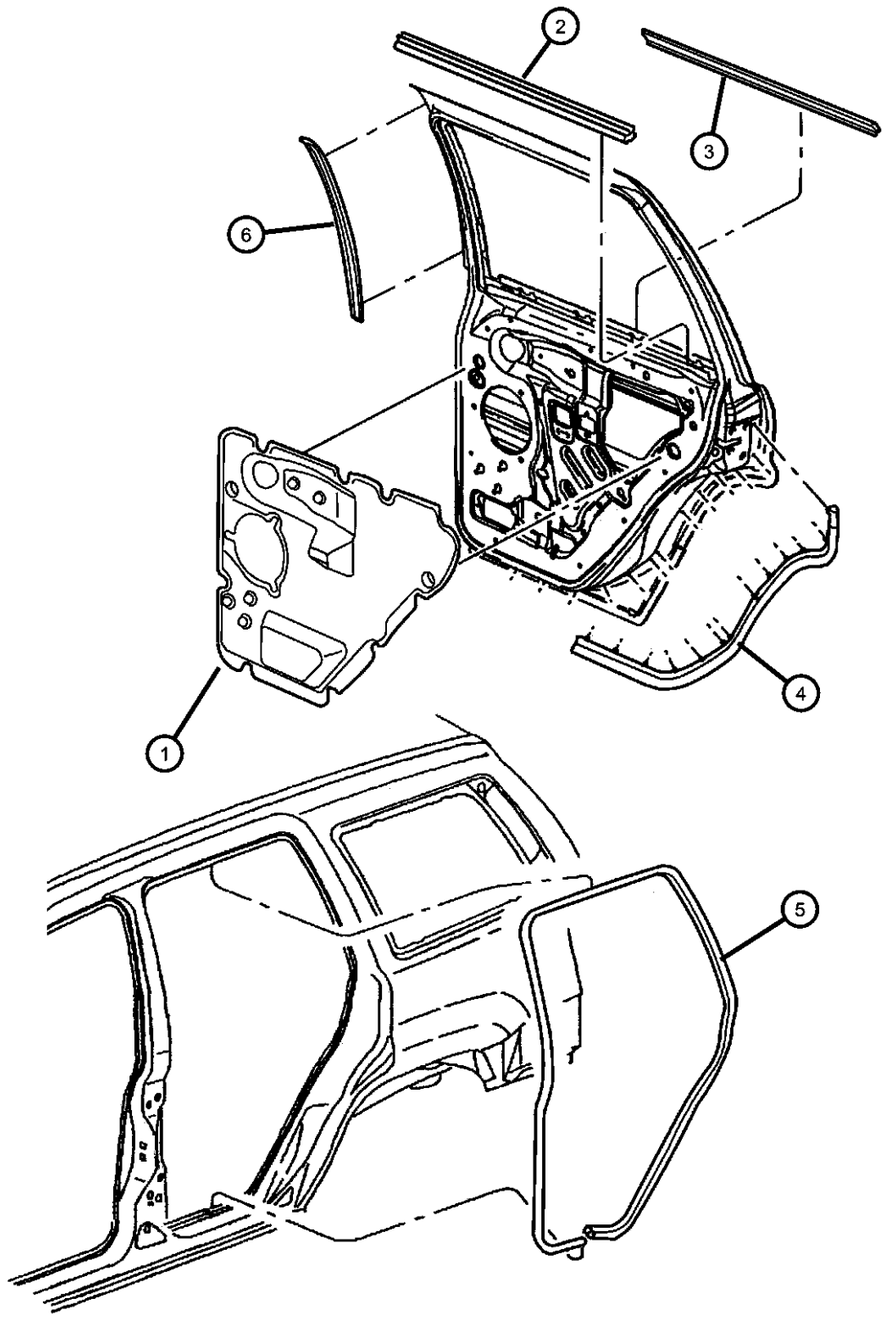

ITEM	PART NUMBER	QTY	LINE	SERIES	BODY	ENGINE	TRANS	TRIM	DESCRIPTION
1									INSULATOR, Rear Door
	55135876AF	1							Right
	55135877AF	1							Left
2									WEATHERSTRIP, Rear Door Belt, Inner
	55135888AC	1							Right
	55135889AC	1							Left
3									WEATHERSTRIP, Rear Door Belt, Outer
	55135890AC	1							Right
	55135891AC	1							Left
4									SEAL, Rear Door
	55136116AB	1							Right
	55136117AB	1							Left
5									SEAL, Rear Door
	55135958AG	1							Right
	55135959AG	1							Left
6									SEAL, B-Pillar
	55136118AD	1							Right
	55136119AD	1							Left
-7									BLOCKER, Seal Exterior A Pillar
	55363144AB	1							Right
	55363145AB	1							Left

GRAND CHEROKEE (WJ)

SERIES	LINE	BODY	ENGINE	TRANSMISSION
H = Laredo M = Sport P = Limited S = Overland	T = JEEP - 2WD J = JEEP - 4WD U = JEEP - 4WD (RHD)	74 = SPORT UTILITY 4-DR	ERH = Engine - 4.0L Power Tech I-6 EVA = Engine- 4.7L V8 MPI EVC = Engine - 4.7L HO V8 MPI ER0 = All 4.0L 6 Cyl. Gas EV0 = All 4.7L Gas	DGK = 4 Speed Auto, 42RE DGQ = 5 Speed Auto, 45RFE DG0 = All Automatic Transmissions

Door, Rear Tail Gate Weatherstrips and Seals
Figure DWJ-630

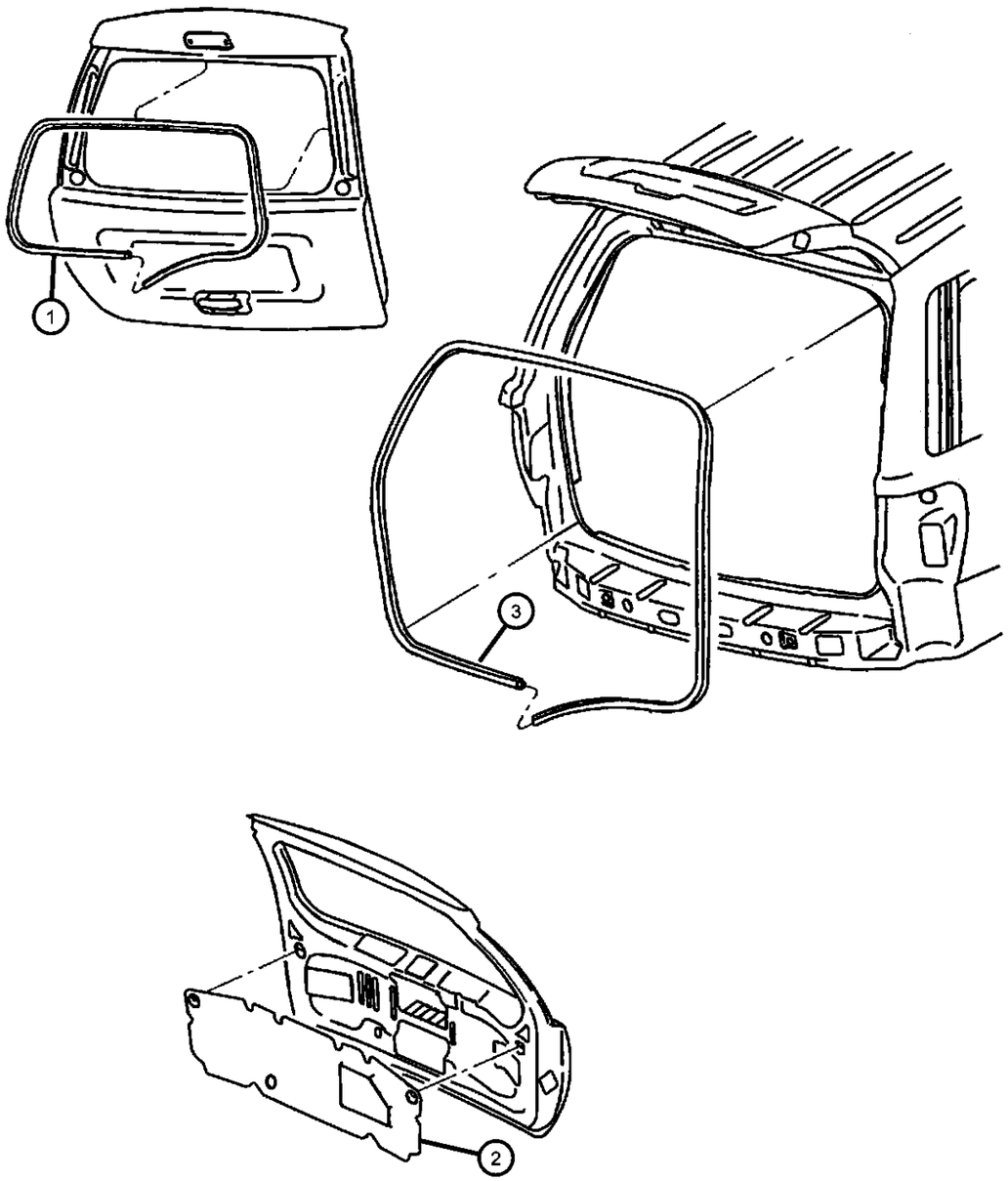

ITEM	PART NUMBER	QTY	LINE	SERIES	BODY	ENGINE	TRANS	TRIM	DESCRIPTION
1	55363160AA	1							WEATHERSTRIP, Liftgate Glass
2	55136185AC	1							INSULATION, Liftgate
3	55135388AC	1							SEAL, Liftgate

GRAND CHEROKEE (WJ)

SERIES	LINE	BODY	ENGINE	TRANSMISSION
H = Laredo M = Sport P = Limited S = Overland	T = JEEP - 2WD J = JEEP - 4WD U = JEEP - 4WD (RHD)	74 = SPORT UTILITY 4-DR	ERH = Engine - 4.0L Power Tech I-6 EVA = Engine- 4.7L V8 MPI EVC = Engine - 4.7L HO V8 MPI ER0 = All 4.0L 6 Cyl. Gas EV0 = All 4.7L Gas	DGK = 4 Speed Auto, 42RE DGQ = 5 Speed Auto, 45RFE DG0 = All Automatic Transmissions

AR = use ase required - = Non illustrrated part

Group - EWJ

Exterior Ornamentation

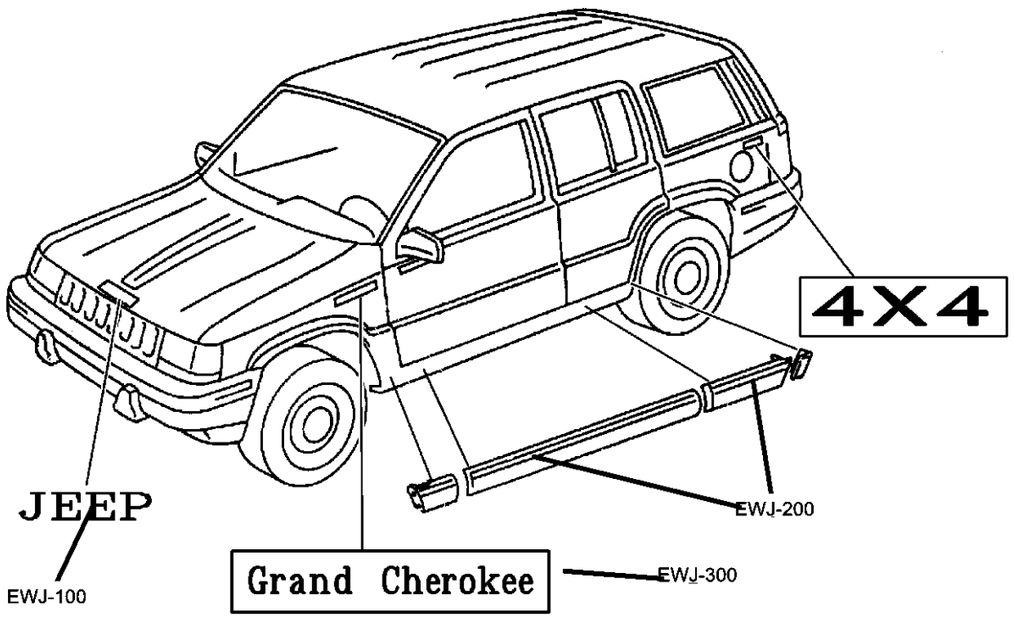

EWJ-100 Nameplates Grand Cherokee JEEP	**EWJ-200** Moldings and Ornamentation 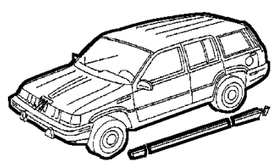		

Group - EWJ Exterior Ornamentation

Illustration Title — Group-Fig. No.

Nameplates
Nameplates and Decals ..... Fig. EWJ - 120

Moldings and Ornamentation
Moldings, Upper ..... Fig. EWJ - 210
Cladding and Sill Moldings ..... Fig. EWJ - 220

Nameplates and Decals
Figure EWJ-120

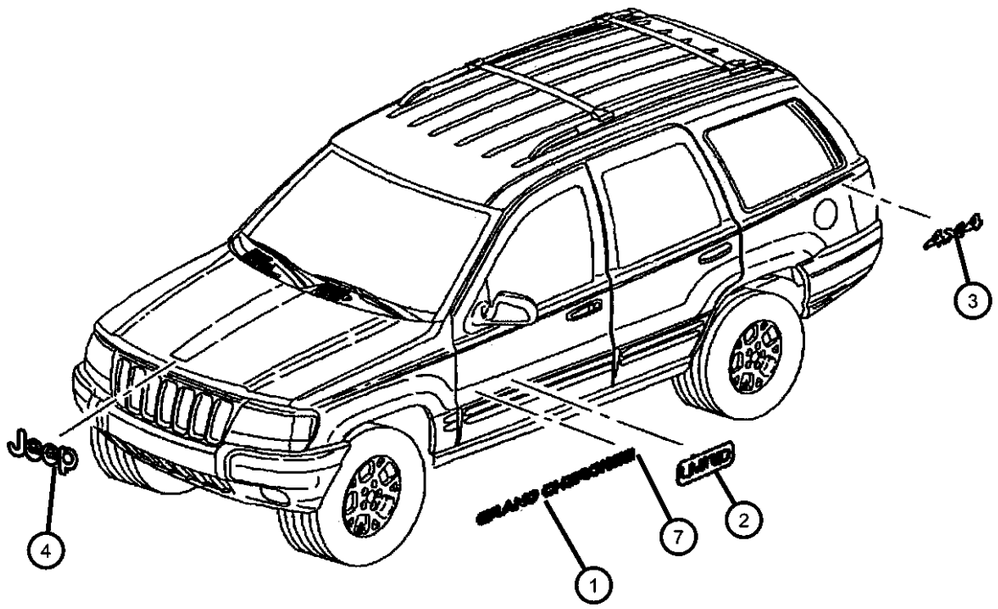

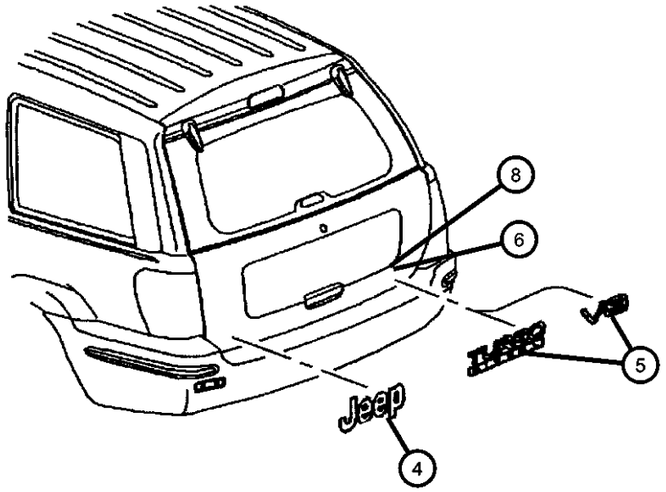

ITEM	PART NUMBER	QTY	LINE	SERIES	BODY	ENGINE	TRANS	TRIM	DESCRIPTION
1	55155621	2							NAMEPLATE, Grand Cherokee, Grand Cherokee, Chrome
2	55156043AA	2							DIMENSIONAL GRAPHIC, Limited, Chrome
3	55155623	2	J						NAMEPLATE, 4x4, Chrome
4	55155622	2							NAMEPLATE, Jeep, Chrome
5									NAMEPLATE, V-8 and Quadra Drive
	55155620	1							V-8 Chrome
	55155994AA	1							Quadra Drive - Chrome
6	55156273AD	1							DECAL, Sport
7	55156590AA	2	J	S					NAMEPLATE, Overland
8	55156208AA	1							NAMEPLATE, 4.7L HO
-9	55156273AD	1							DECAL, Sport
-10	55156807AA	2		H					DIMENSIONAL GRAPHIC, Special Edition

GRAND CHEROKEE (WJ)

SERIES	LINE	BODY	ENGINE	TRANSMISSION
H = Laredo	T = JEEP - 2WD	74 = SPORT UTILITY 4-DR	ERH = Engine - 4.0L Power Tech I-6	DGK = 4 Speed Auto, 42RE
M = Sport	J = JEEP - 4WD		EVA = Engine- 4.7L V8 MPI	DGQ = 5 Speed Auto, 45RFE
P = Limited	U = JEEP - 4WD (RHD)		EVC = Engine - 4.7L HO V8 MPI	DG0 = All Automatic Transmissions
S = Overland			ER0 = All 4.0L 6 Cyl. Gas	
			EV0 = All 4.7L Gas	

AR = use ase required - = Non illustrrated part

Moldings, Upper
Figure EWJ-210

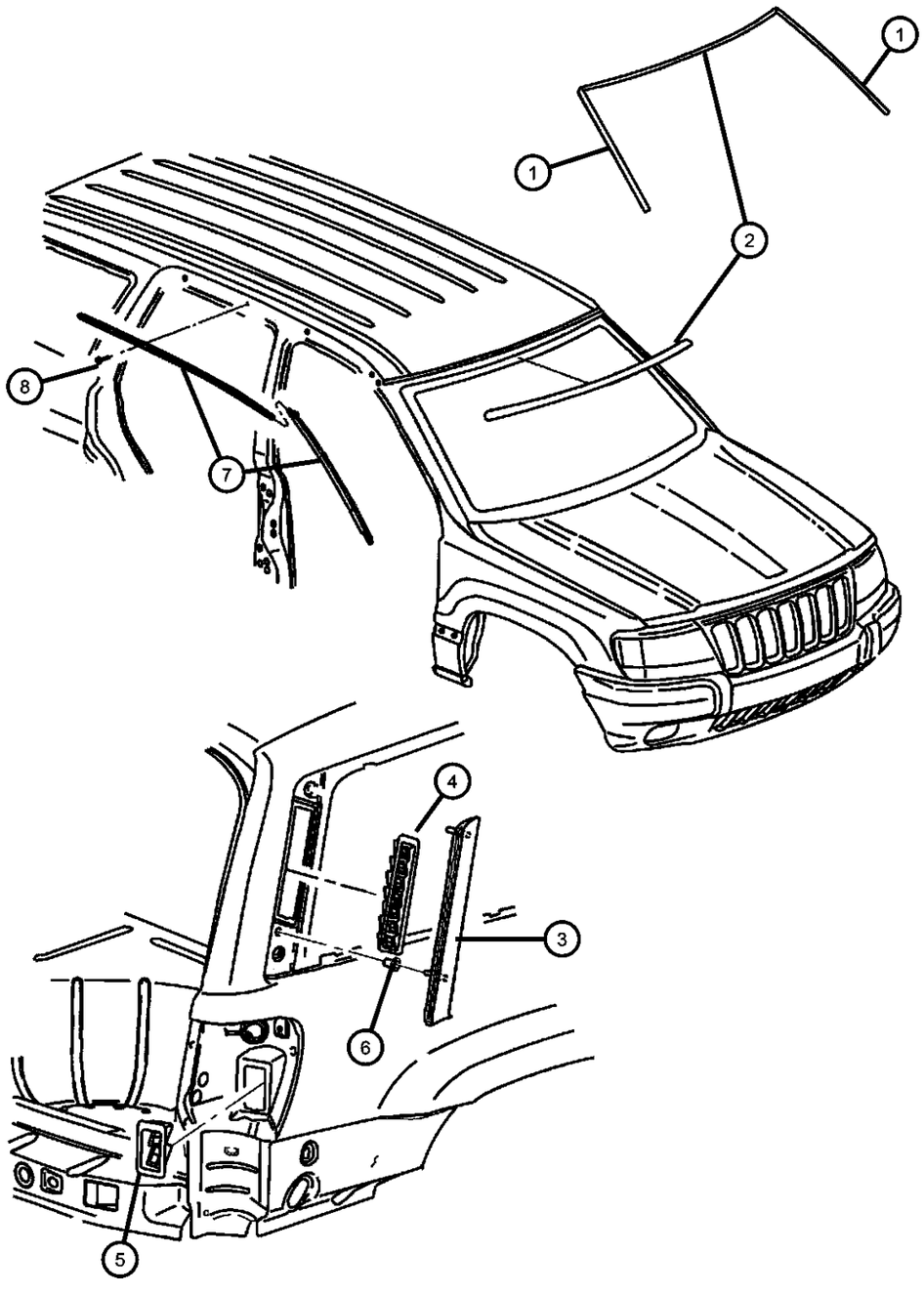

ITEM	PART NUMBER	QTY	LINE	SERIES	BODY	ENGINE	TRANS	TRIM	DESCRIPTION
1									MOLDING, Windshield
	55136902AE	1							Right
	55136903AE	1							Left
2	55135592AD	1							MOLDING, WindshieldUpper
3									APPLIQUE, D Pillar
	5EZ20DX8AC	1							[X8], Right
	5EZ20SW1AC	1							[W1], Right
	5EZ20WS-BAC	1							[SB], Right
	5EZ20XBQAC	1							[BQ], Right
	5EZ20XRVAC	1							[RV], Right
	5EZ20XS5AC	1							[S5], Right
	5EZ20YJRAC	1							[JR], Right
	5EZ20YUBAC	1							[UB], Right
	5EZ20WB-TAC	1							[BT], Right
	5EZ20WELAC	1							[EL], Right
	5EZ21WB-TAC	1							[BT], Left
	5EZ21WELAC	1							[EL], Left
	5EZ20ZDRAC	1							[DR], Right
	5EZ21DX8AC	1							[X8], Left
	5EZ21SW1AC	1							[W1], Left
	5EZ21WS-BAC	1							[SB], Left
	5EZ21XBQAC	1							[BQ], Left
	5EZ21XRVAC	1							[RV], Left
	5EZ21XS5AC	1							[S5], Left
	5EZ21YJRAC	1							[JR], Left
	5EZ21YUBAC	1							[UB], Left
	5EZ21ZDRAC	1							[DR], Left
4	55136278AF	1							EXHAUSTER, Quarter PanelRight
5	55136280AB	2							EXHAUSTER, Quarter Panel
6	06004512	4							CLIP, D Pillar Exhauster
7									SEAL, Body Side
	55135869AC	1							Right

GRAND CHEROKEE (WJ)

SERIES	LINE	BODY	ENGINE	TRANSMISSION
H = Laredo M = Sport P = Limited S = Overland	T = JEEP - 2WD J = JEEP - 4WD U = JEEP - 4WD (RHD)	74 = SPORT UTILITY 4-DR	ERH = Engine - 4.0L Power Tech I-6 EVA = Engine- 4.7L V8 MPI EVC = Engine - 4.7L HO V8 MPI ER0 = All 4.0L 6 Cyl. Gas EV0 = All 4.7L Gas	DGK = 4 Speed Auto, 42RE DGQ = 5 Speed Auto, 45RFE DG0 = All Automatic Transmissions

Moldings, Upper
Figure EWJ-210

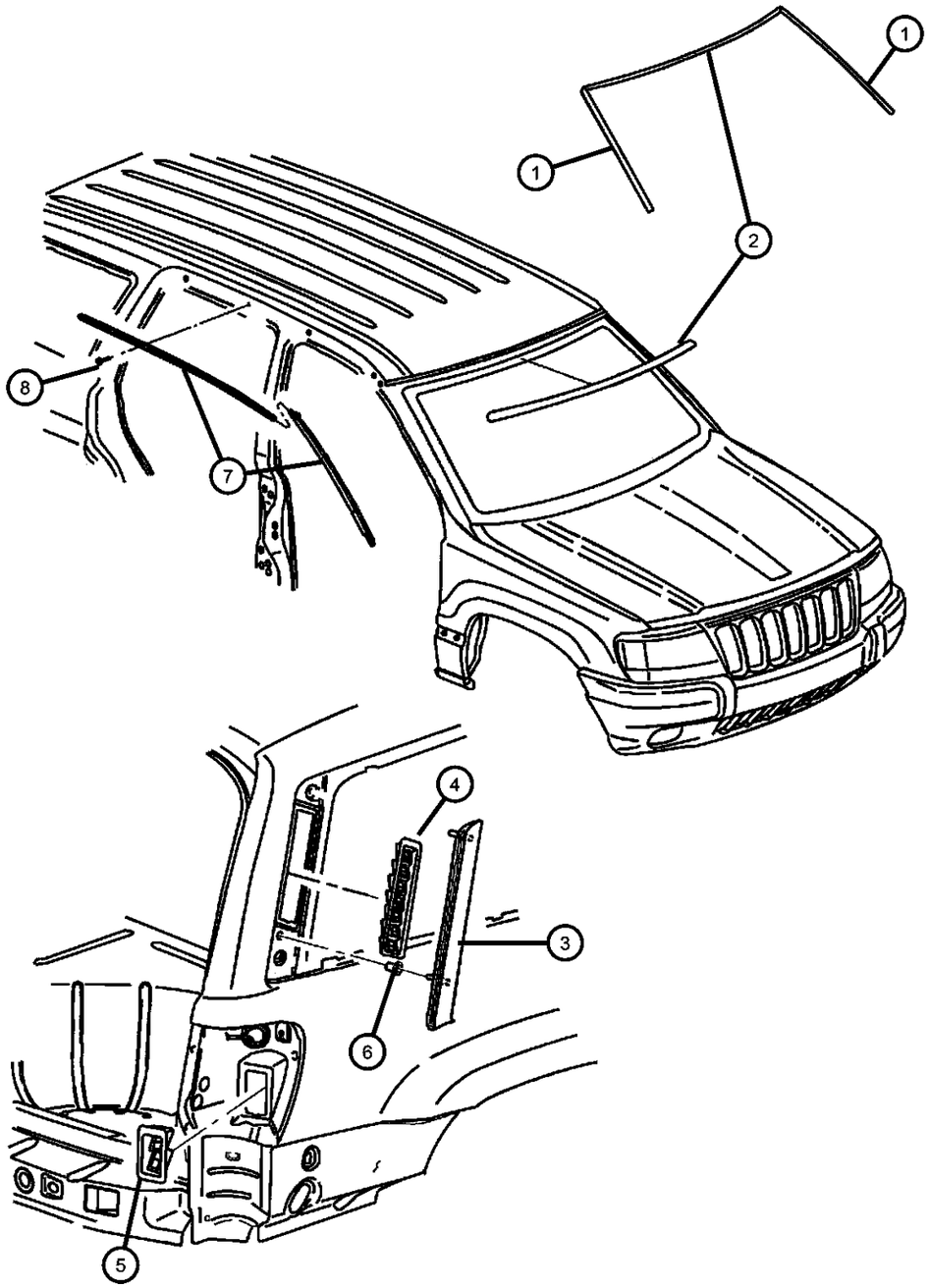

ITEM	PART NUMBER	QTY	LINE	SERIES	BODY	ENGINE	TRANS	TRIM	DESCRIPTION
	55135872AC	1							Left
8	55135872AC	1							SCREW, Tapping, .164-18x.437, 06033605, (NOT SERVICED)

GRAND CHEROKEE (WJ)

SERIES	LINE	BODY	ENGINE	TRANSMISSION
H = Laredo M = Sport P = Limited S = Overland	T = JEEP - 2WD J = JEEP - 4WD U = JEEP - 4WD (RHD)	74 = SPORT UTILITY 4-DR	ERH = Engine - 4.0L Power Tech I-6 EVA = Engine- 4.7L V8 MPI EVC = Engine - 4.7L HO V8 MPI ER0 = All 4.0L 6 Cyl. Gas EV0 = All 4.7L Gas	DGK = 4 Speed Auto, 42RE DGQ = 5 Speed Auto, 45RFE DG0 = All Automatic Transmissions

Cladding and Sill Moldings
Figure EWJ-220

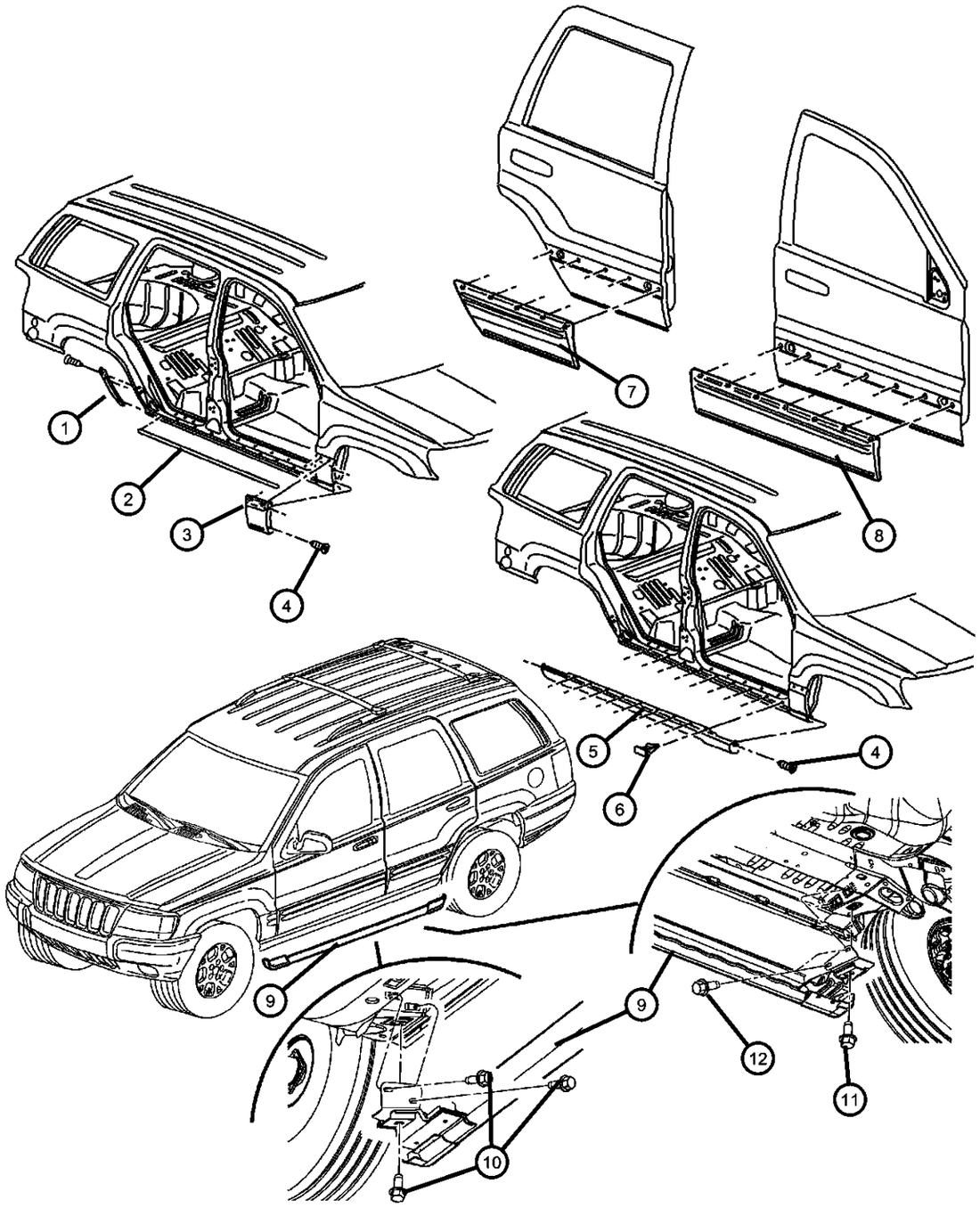

ITEM	PART NUMBER	QTY	LINE	SERIES	BODY	ENGINE	TRANS	TRIM	DESCRIPTION
Note; Sales Codes									
[ADX,ALZ] = Special Apperance Package									
1									CLADDING, Quarter Panel
	5EY78VF7AB	1		H					[K4K], Right
		1		M					[K4K], Right
	5EY78XS9AB	1		H					[K4A], Right
		1		M					[K4A], Right
	5EY78YBMAB	1		H					[K4C], Right
	5EY78YR8AB	1		H					[K4Y], Right
	5EY79VF7AB	1		H					[K4K], Left
		1		M					[K4K], Left
	5EY79XS9AB	1		H					[K4A], Left
		1		M					[K4A], Left
	5EY79YBMAB	1		H					[K4C], Left
	5EY79YR8AB	1		H					[K4Y], Left
	5EY88AXR	1		P					[K4B], Right
		1		H					[K4B], Right
	5EY88DX8	1		P					[K4X], Right
	5EY88SW1	1		P					[K4N], Right
		1		H					[K4N], Right
	5EY88WBT	1		P					[K4P], Right
		1		H					[K4P], Right
	5EY88WEL	1		P					[K4W], Right
		1		S					[K4W], Right
		1		H					[K4W], Right
	5EY88WSB	1		P					[K4L], Right
		1		S					[K4L], Right
		1		H					[K4L], Right
	5EY88XBQ	1		P					[K4Q], Right
		1		H					[K4Q], Right
	5EY88XRV	1		P					[K4V], Right
		1		H					[K4V], Right
	5EY88XS5	1		P					[K4H], Right
		1		S					[K4H], Right

GRAND CHEROKEE (WJ)

SERIES	LINE	BODY	ENGINE	TRANSMISSION
H = Laredo M = Sport P = Limited S = Overland	T = JEEP - 2WD J = JEEP - 4WD U = JEEP - 4WD (RHD)	74 = SPORT UTILITY 4-DR	ERH = Engine - 4.0L Power Tech I-6 EVA = Engine- 4.7L V8 MPI EVC = Engine - 4.7L HO V8 MPI ER0 = All 4.0L 6 Cyl. Gas EV0 = All 4.7L Gas	DGK = 4 Speed Auto, 42RE DGQ = 5 Speed Auto, 45RFE DG0 = All Automatic Transmissions

Cladding and Sill Moldings
Figure EWJ-220

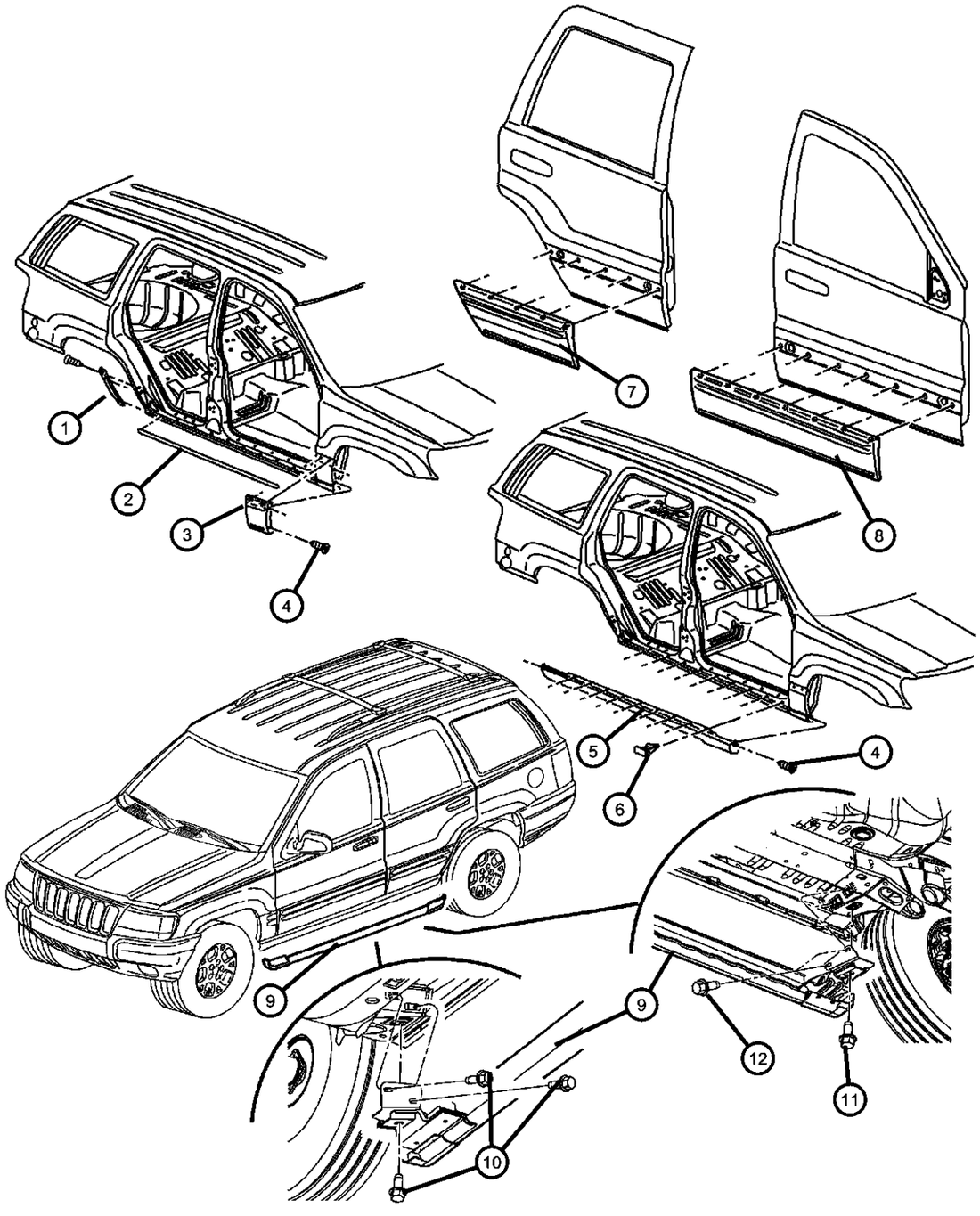

ITEM	PART NUMBER	QTY	LINE	SERIES	BODY	ENGINE	TRANS	TRIM	DESCRIPTION
	5EY88YFF	1		P					[K4F], Right
	5EY88YJR	1		P					[K4J], Right
		1		S					[K4J], Right
		1		H					[K4J], Right
	5EY88YUB	1		P					[K4T], Right
		1		H					[K4T], Right
	5EY88ZDR	1		P					[K4D], Right
		1		S					[K4D], Right
		1		H					[K4D], Right
	5EY89AXR	1		P					[K4B], Left
		1		H					[K4B], Left
	5EY89DX8	1		P					[K4X], Left
	5EY89SW1	1		P					[K4N], Left
		1		H					[K4N], Left
	5EY89WBT	1		P					[K4P], Left
		1		H					[K4P], Left
	5EY89WEL	1		P					[K4W], Left
		1		S					[K4W], Left
		1		H					[K4W], Left
	5EY89WSB	1		P					[K4L], Left
		1		S					[K4L], Left
		1		H					[K4L], Left
	5EY89XBQ	1		P					[K4Q], Left
		1		H					[K4Q], Left
	5EY89XRV	1		P					[K4V], Left
		1		H					[K4V], Left
	5EY89XS5	1		P					[K4H], Left
		1		S					[K4H], Left
	5EY89YFF	1		P					[K4F], Left
	5EY89YJR	1		P					[K4J], Left
		1		S					[K4J], Left
		1		H					[K4J], Left
	5EY89YUB	1		P					[K4T], Left

GRAND CHEROKEE (WJ)

SERIES	LINE	BODY	ENGINE	TRANSMISSION
H = Laredo M = Sport P = Limited S = Overland	T = JEEP - 2WD J = JEEP - 4WD U = JEEP - 4WD (RHD)	74 = SPORT UTILITY 4-DR	ERH = Engine - 4.0L Power Tech I-6 EVA = Engine- 4.7L V8 MPI EVC = Engine - 4.7L HO V8 MPI ER0 = All 4.0L 6 Cyl. Gas EV0 = All 4.7L Gas	DGK = 4 Speed Auto, 42RE DGQ = 5 Speed Auto, 45RFE DG0 = All Automatic Transmissions

AR = use ase required - = Non illustrrated part

Cladding and Sill Moldings
Figure EWJ-220

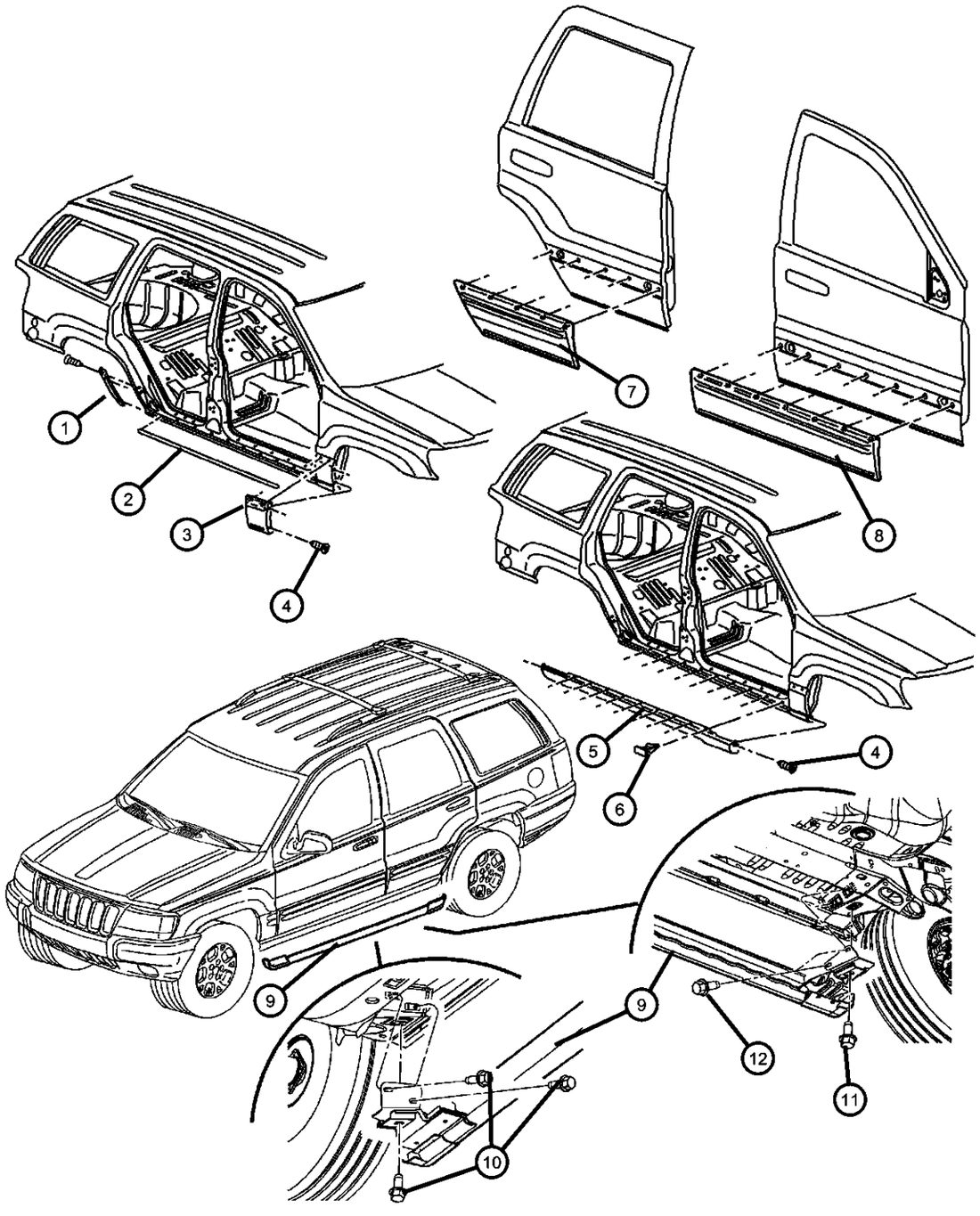

ITEM	PART NUMBER	QTY	LINE	SERIES	BODY	ENGINE	TRANS	TRIM	DESCRIPTION
		1		H					[K4T], Left
	5EY89ZDR	1		P					[K4D], Left
		1		S					[K4D], Left
		1		H					[K4D], Left
2									TAPE, Anti Chip, Black
	55156736AA	2		H					Covers The Holes In The Sill
	55156736AB	2		P, S					
3									CLADDING, Fender
	05015766AB	1		P					Right
		1		S					Right
		1		H					[ADX,ALZ], Right
	05015767AA	1		S					Left
	05015767AB	1		P					Left
		1		H					[ADX,ALZ], Left
	5FR16VF7AB	1		H					[K4K], Right
	5FR16XS9AB	1		H					[K4A], Right
		1		M					[K4A], Right
	5FR16YBMAB	1		H					[K4C], Right
	5FR16YR8AB	1		H					[K4Y], Right
	5FR16VF7AC	1		M					[K4K], Right
	5FR17VF7AB	1		H					[K4K], Left
	5FR17XS9AB	1		H					[K4A], Left
		1		M					[K4A], Left
	5FR17YBMAB	1		H					[K4C], Left
	5FR17YR8AB	1		H					[K4Y], Left
	5FR17VF7AC	1		M					[K4K], Left
4	06035217	4							SCREW, Round Head, .164-18.5
5									MOLDING, Sill Cover
	5EY64VF7AB	1		H					[K4K], Right
	5EY64XS9AB	1		H					[K4A], Right
		1		M					[K4A], Right
	5EY64YBMAB	1		H					[K4C], Right
	5EY64YR8AB	1		H					[K4Y], Right

GRAND CHEROKEE (WJ)

SERIES	LINE	BODY	ENGINE	TRANSMISSION
H = Laredo M = Sport P = Limited S = Overland	T = JEEP - 2WD J = JEEP - 4WD U = JEEP - 4WD (RHD)	74 = SPORT UTILITY 4-DR	ERH = Engine - 4.0L Power Tech I-6 EVA = Engine- 4.7L V8 MPI EVC = Engine - 4.7L HO V8 MPI ER0 = All 4.0L 6 Cyl. Gas EV0 = All 4.7L Gas	DGK = 4 Speed Auto, 42RE DGQ = 5 Speed Auto, 45RFE DG0 = All Automatic Transmissions

AR = use ase required - = Non illustrrated part

Cladding and Sill Moldings
Figure EWJ-220

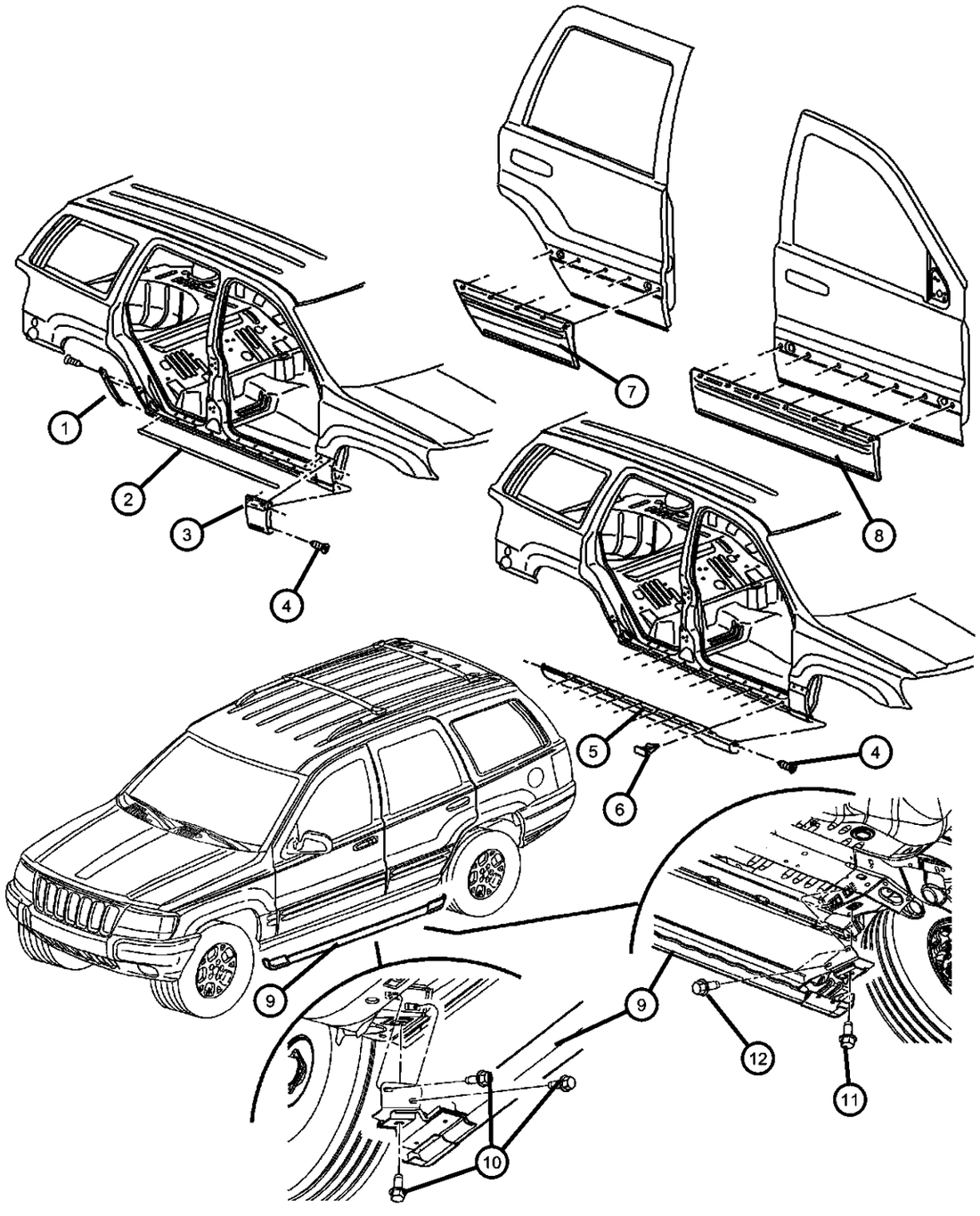

ITEM	PART NUMBER	QTY	LINE	SERIES	BODY	ENGINE	TRANS	TRIM	DESCRIPTION
	5EY64VF7AC	1		M					[K4K], Right
	5EY65VF7AB	1		H					[K4K], Left
	5EY65XS9AB	1		H					[K4A], Left
		1		M					[K4A], Left
	5EY65YBMAB	1		H					[K4C], Left
	5EY65YR8AB	1		H					[K4Y], Left
	5EY65VF7AC	1		M					[K4K], Left
	5FX65DX9AA	2		P, S					
6	5FR56DX9	18		H					RETAINER
7									CLADDING, Rear Door
	05015772AB	1		P					Right
		1		S					Right
		1		H					[ADX,ALZ], Right
	05015773AA	1		S					Left
	05015773AB	1		P					Left
		1		H					[ADX,ALZ], Left
	5EY74VF7AC	1		H					[K4K], Right
	5EY74XS9AC	1		H					[K4A], Right
	5EY74YB-MAC	1		H					[K4C], Right
	5EY74YR8AC	1		H					[K4Y], Right
	5EY74VF7AF	1		M					[K4K], Right
	5EY74XS9AF	1		M					[K4A], Right
	5EY74YBMAF	1		M					[K4C], Right
	5EY74YR8AF	1		M					[K4Y], Right
	5EY75VF7AC	1		H					[K4K], Left
	5EY75XS9AC	1		H					[K4A], Left
	5EY75YB-MAC	1		H					[K4C], Left
	5EY75YR8AC	1		H					[K4Y], Left
	5EY75VF7AF	1		M					[K4K], Left
	5EY75XS9AF	1		M					[K4A], Left
	5EY75YBMAF	1		M					[K4C], Left
	5EY75YR8AF	1		M					[K4Y], Left

GRAND CHEROKEE (WJ)

SERIES	LINE	BODY	ENGINE	TRANSMISSION
H = Laredo M = Sport P = Limited S = Overland	T = JEEP - 2WD J = JEEP - 4WD U = JEEP - 4WD (RHD)	74 = SPORT UTILITY 4-DR	ERH = Engine - 4.0L Power Tech I-6 EVA = Engine- 4.7L V8 MPI EVC = Engine - 4.7L HO V8 MPI ER0 = All 4.0L 6 Cyl. Gas EV0 = All 4.7L Gas	DGK = 4 Speed Auto, 42RE DGQ = 5 Speed Auto, 45RFE DG0 = All Automatic Transmissions

AR = use ase required - = Non illustrrated part

Cladding and Sill Moldings
Figure EWJ-220

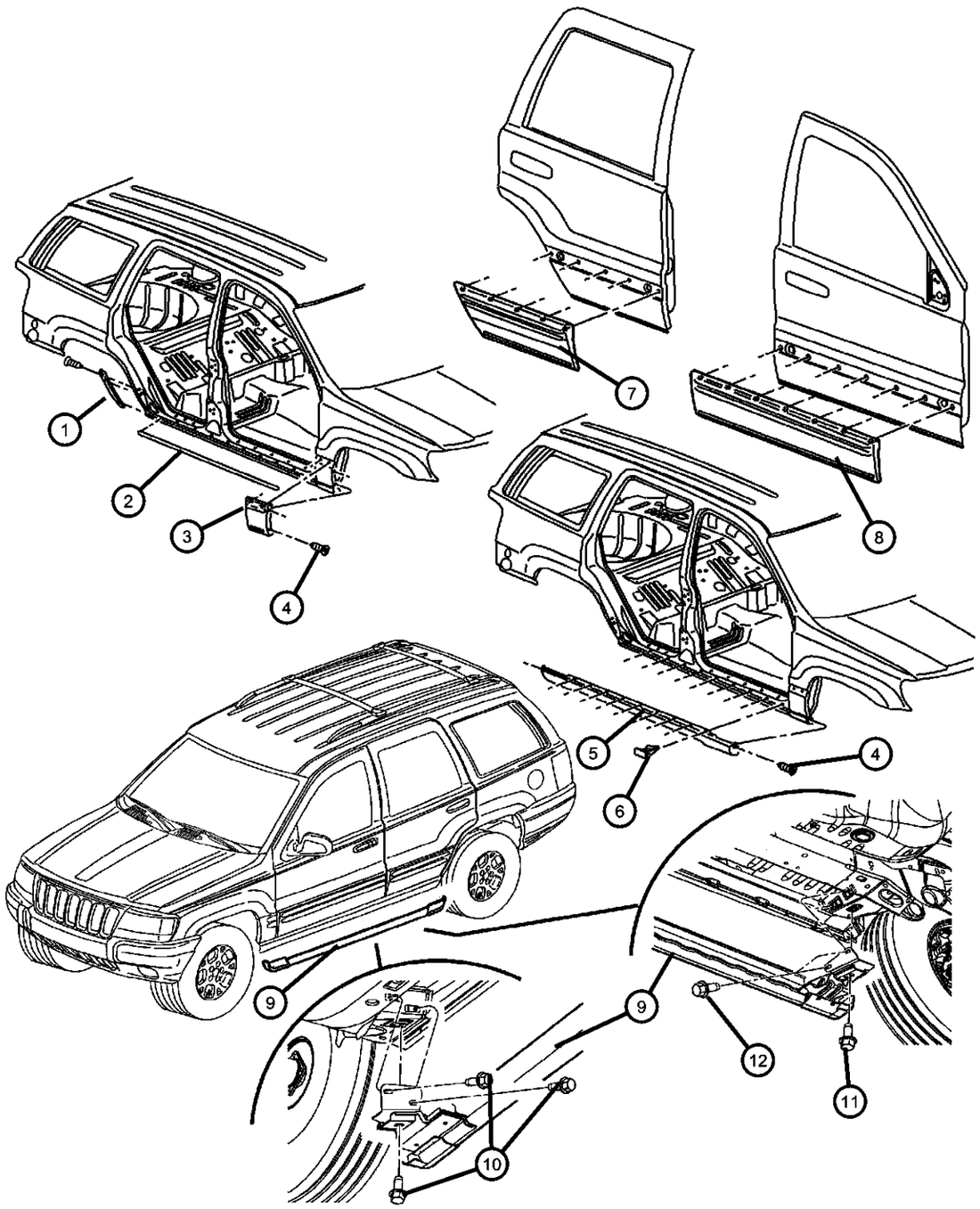

ITEM	PART NUMBER	QTY	LINE	SERIES	BODY	ENGINE	TRANS	TRIM	DESCRIPTION
8									CLADDING, Front Door
	05015770AB	1		P					Right
		1		S					Right
		1		H					[ADX,ALZ], Right
	05015771AB	1		P					Left
		1		S					Left
		1		H					[ADX,ALZ], Left
	5FR20VF7AC	1		H					[K4K], Right
	5FR20XS9AC	1		H					[K4A], Right
	5FR20YB-MAC	1		H					[K4C], Right
	5FR20YR8AC	1		H					[K4Y], Right
	5FR20VF7AF	1		M					[K4K], Right
	5FR20XS9AF	1		M					[K4A], Right
	5FR20YBMAF	1		M					[K4C], Right
	5FR20YR8AF	1		M					[K4Y], Right
	5FR21VF7AC	1		H					[K4K], Left
	5FR21XS9AC	1		H					[K4A], Left
	5FR21YB-MAC	1		H					[K4C], Left
	5FR21YR8AC	1		H					[K4Y], Left
	5FR21VF7AF	1		M					[K4K], Left
	5FR21XS9AF	1		M					[K4A], Left
	5FR21YBMAF	1		M					[K4C], Left
	5FR21YR8AF	1		M					[K4Y], Left
9									RAIL, Rocker Panel
	5HU38VF7AE	1							Right
	5HU39VF7AE	1							Left
10	06507331AA	12							SCREW
11	06507332AA	2							SCREW
12	06507333AA	2							SCREW

GRAND CHEROKEE (WJ)

SERIES	LINE	BODY	ENGINE	TRANSMISSION
H = Laredo M = Sport P = Limited S = Overland	T = JEEP - 2WD J = JEEP - 4WD U = JEEP - 4WD (RHD)	74 = SPORT UTILITY 4-DR	ERH = Engine - 4.0L Power Tech I-6 EVA = Engine- 4.7L V8 MPI EVC = Engine - 4.7L HO V8 MPI ER0 = All 4.0L 6 Cyl. Gas EV0 = All 4.7L Gas	DGK = 4 Speed Auto, 42RE DGQ = 5 Speed Auto, 45RFE DG0 = All Automatic Transmissions

AR = use ase required - = Non illustrrated part

Group - IWJ

Interior Trim

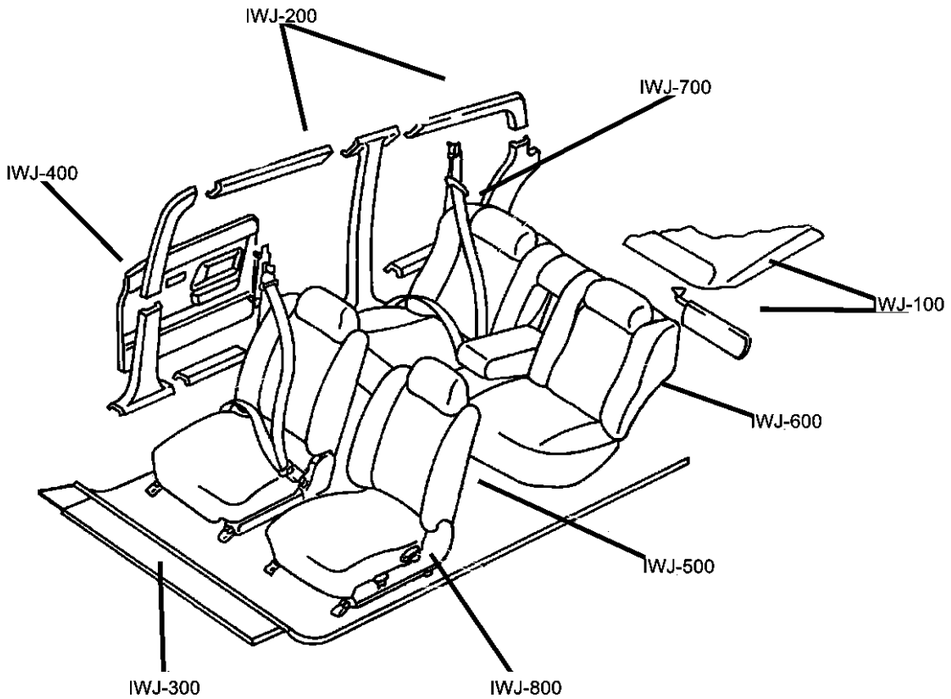

IWJ-100 Headliner and Visor 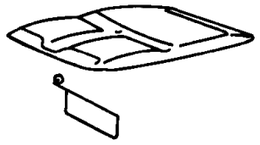	**IWJ-1000** Lift Gate Trim 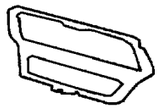	**IWJ-200** Panel - Mouldings, Scuff Plates 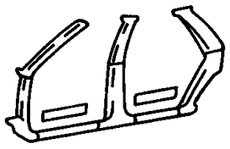	**IWJ-300** Carpet 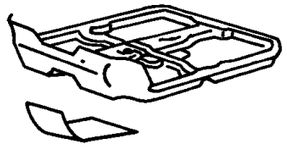
IWJ-400 Door Trim Panels 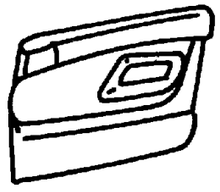	**IWJ-500** Front Seats and Attaching Parts 	**IWJ-600** Rear Seats and Attaching Parts 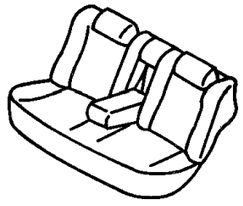	**IWJ-700** Seat Belts - Front and Rear 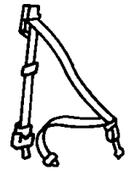
IWJ-800 Adjusters, Covers, Shields and Risers 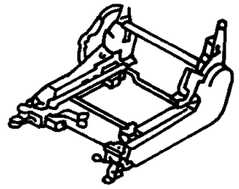			

Group - IWJ Interior Trim

Illustration Title — Group-Fig. No.

Headliner and Visor
Headliner and Assist Handle ..... Fig. IWJ - 110
Sunvisor ..... Fig. IWJ - 120

Panel - Mouldings, Scuff Plates
Front Trim Panels and Scuff Plates ..... Fig. IWJ - 210
Rear Trim Panels ..... Fig. IWJ - 220
Side Air Bag Curtain ..... Fig. IWJ - 230

Carpet
Carpet and Insulation ..... Fig. IWJ - 310

Door Trim Panels
Door Trim Panels ..... Fig. IWJ - 410

Front Seats and Attaching Parts
Front Seat, Cloth, Trim Code [E7] ..... Fig. IWJ - 510
Front Seat, Leather, Trim Code [JL] ..... Fig. IWJ - 520
Front Seat, Leather, Trim Code [XL] ..... Fig. IWJ - 530
Front Seat, Leather, Trim Code [NL] ..... Fig. IWJ - 540

Rear Seats and Attaching Parts
Rear Seat, Trim Code [E7] ..... Fig. IWJ - 610
Rear Seat, Trim Code [JL] ..... Fig. IWJ - 620
Rear Seat, Trim Code [XL] ..... Fig. IWJ - 630
Rear Seat, Trim Code [NL] ..... Fig. IWJ - 640

Seat Belts - Front and Rear
Front Seat ..... Fig. IWJ - 710
Rear Seat Belt ..... Fig. IWJ - 720

Adjusters, Covers, Shields and Risers
Recliner and Adjusters ..... Fig. IWJ - 810

Lift Gate Trim
Liftgate Panel and Scuff Plate ..... Fig. IWJ - 1010

Headliner and Assist Handle
Figure IWJ-110

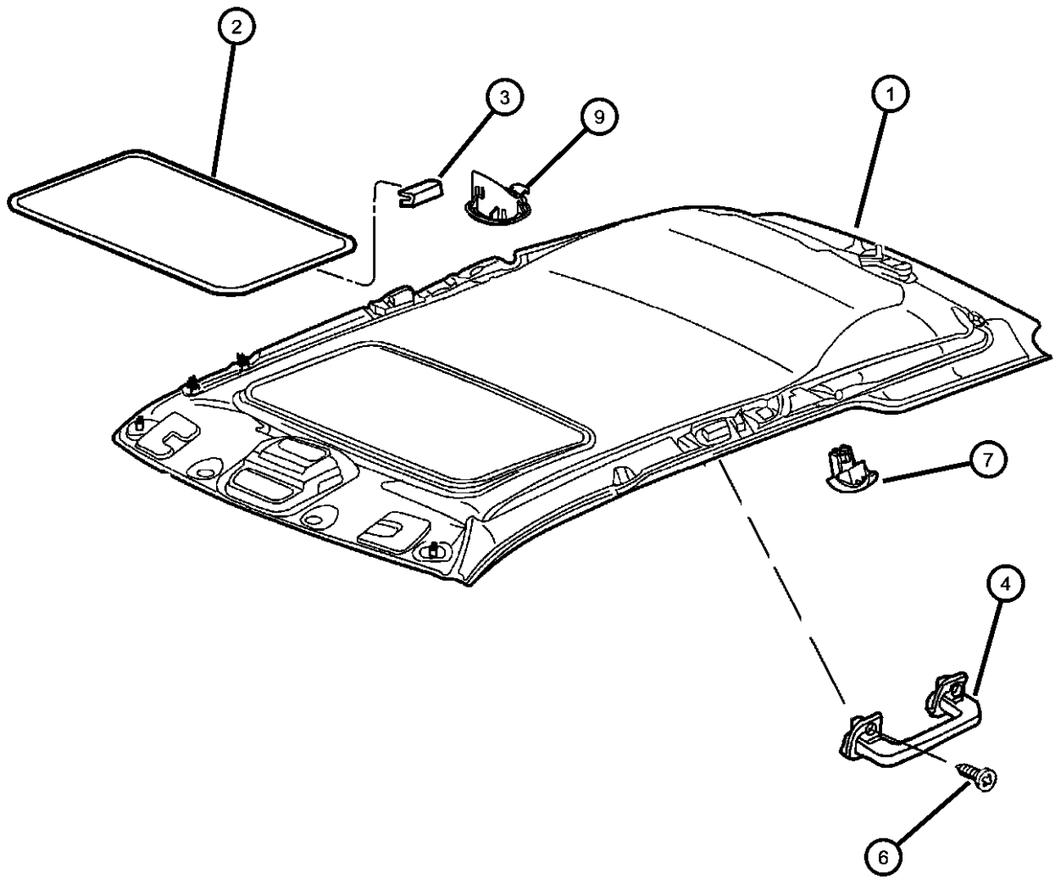

ITEM	PART NUMBER	QTY	LINE	SERIES	BODY	ENGINE	TRANS	TRIM	DESCRIPTION

Sales Codes :
[CGS] = With Side Airbags
[GWA] = Sunroof
[JHC] = Windshield Wiper, Rain Sensitive
Note: For [T5] interiors: Vehicles built up to 1/16/02 use headliners with [XT5]
Vehicles built after 1/16/02 use headliners with [TL2]

1									HEADLINER
	5HG77TL2AB	1						*O0	[DV, L5], Without Side Airbags [CGS] or Sunroof [GWA] or Rain Sensitive Wipers [JHC]
	5HG77XT5AC	1						*O0	[T5], Without Side Airbags [CGS] or Sunroof [GWA] or Rain Sensitive Wipers [JHC]
	5HG86TL2AB	1						*O0	[DV, L5], With Side Airbags [CGS], Without Sunroof [GWA] or Rain Sensitive Wipers [JHC]
	5HG87XT5AB	1						*O0	[T5], With Side Airbags [CGS] and Rain Sensitive Wipers [JHC], Without Sunroof [GWA]
	5HG86XT5AB	1						*O0	[T5], With Side Airbags [CGS], Without Sunroof [GWA] or Rain Sensitive Wipers [JHC]
	5HG87TL2AB	1						*O0	[DV, L5], With Side Airbags [CGS] and Rain Sensitive Wipers [JHC], Without Sunroof [GWA]
	5HG90TL2AB	1						*O0	[DV, L5], With Rain Sensitive Wipers [JHC], Without Side Airbags [CGS] or Sunroof [GWA]
	5HG90XT5AB	1						*O0	[T5], With Rain Sensitive Wipers [JHC], Without Side Airbags [CGS] or Sunroof [GWA]
	5HG93TL2AB	1						*O0	[DV, L5], With Sunroof [GWA], Without Side Airbags [CGS] or Rain Sensitive Wipers [JHC]
	5HG93XT5AB	1						*O0	[T5], With Sunroof [GWA], Without Side Airbags [CGS] or Rain Sensitive Wipers [JHC]
	5HG94TL2AB	1						*O0	[DV, L5], With Side Airbags [CGS] and Sunroof [GWA], Without Rain Sensitive Wipers [JHC]
	5HG94XT5AB	1						*O0	[T5], With Side Airbags [CGS] and Sunroof [GWA], Without Rain Sensitive Wipers [JHC]
	5HG95TL2AB	1						*O0	[DV, L5], With Side Airbags [CGS] and Sunroof [GWA] and Rain Sensitive Wipers [JHC]

GRAND CHEROKEE (WJ)

SERIES	LINE	BODY	ENGINE	TRANSMISSION
H = Laredo M = Sport P = Limited S = Overland	T = JEEP - 2WD J = JEEP - 4WD U = JEEP - 4WD (RHD)	74 = SPORT UTILITY 4-DR	ERH = Engine - 4.0L Power Tech I-6 EVA = Engine- 4.7L V8 MPI EVC = Engine - 4.7L HO V8 MPI ER0 = All 4.0L 6 Cyl. Gas EV0 = All 4.7L Gas	DGK = 4 Speed Auto, 42RE DGQ = 5 Speed Auto, 45RFE DG0 = All Automatic Transmissions

Headliner and Assist Handle
Figure IWJ-110

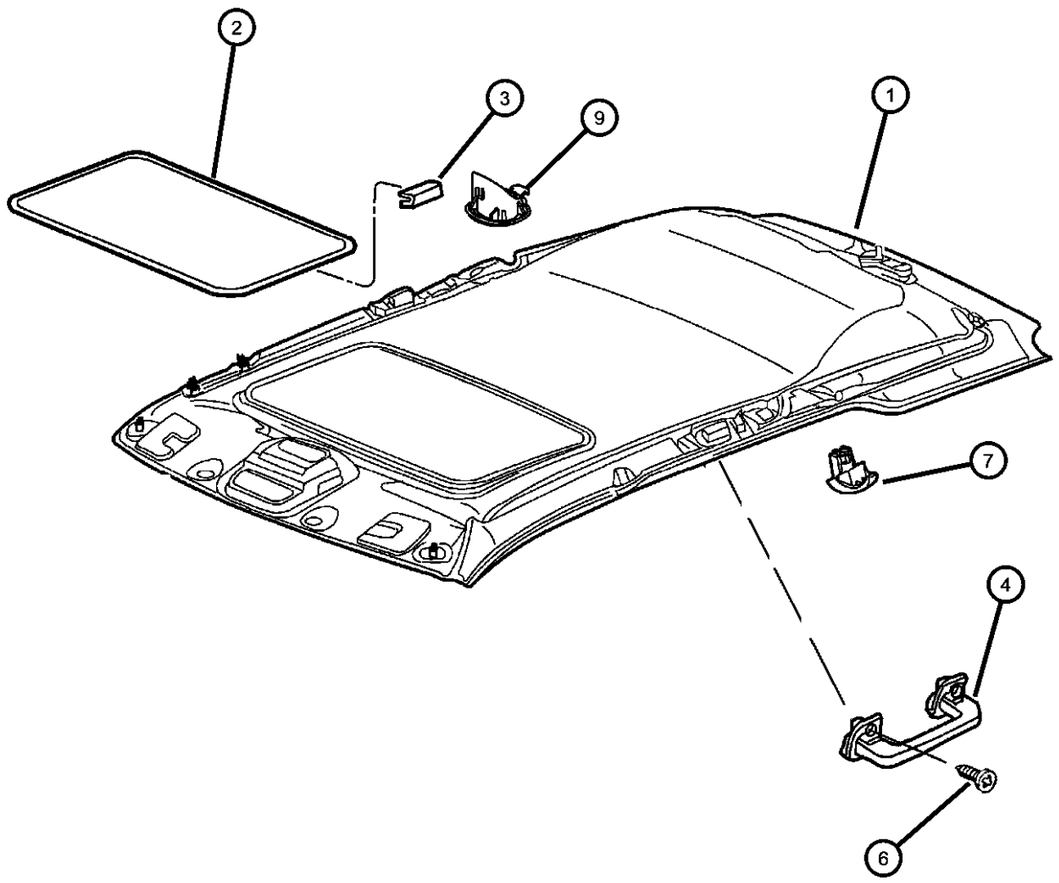

ITEM	PART NUMBER	QTY	LINE	SERIES	BODY	ENGINE	TRANS	TRIM	DESCRIPTION
	5HG95XD-BAB	1						*O0	[DB], With Side Airbags [CGS] and Sunroof [GWA] and Rain Sensitive Wipers [JHC]
	5HG99TL2AB	1						*O0	[DV, L5], With Sunroof [GWA] and Rain Sensitive Wipers [JHC], Without Side Airbags [CGS]
	5HG99XT5AB	1						*O0	[T5], With Sunroof [GWA] and Rain Sensitive Wipers [JHC], Without Side Airbags [CGS]
	5HG95XT5AB	1						*O0	[T5], With Side Airbags [CGS] and Sunroof [GWA] and Rain Sensitive Wipers [JHC]
2									WELT, Headliner
	5FW36TL2AA	1						*O0	[DV, L5], Up to 1/16/02
	5FW36XT5AA	1						*O0	[T5], Up to 1/16/02
	5FW36TL2AB	1						*O0	[DV, L5, T5], After 1/16/02
	5FW36XD-BAB	1						*O0	[DB]
3									RETAINER, Sunroof Welt
	5GD77XD-BAA	1						*O0	[DB]
	5GD77XT5AA	1						*O0	[T5]
	5GD77TL2AA	1						*O0	[DV, L5]
4									HANDLE, Roof Grab
	5FS60TL2	1						*O0	[DV, L5], Right
	5FS60XDB	1						*O0	[DB], Right
	5FS60XT5	1						*O0	[T5], With Lamp, Right
	5FS61TL2	1						*O0	[DV, L5], With Lamp, Left
	5FS61XDB	1						*O0	[DB], With Lamp, Left
	5FS61XT5	1						*O0	[T5], With Lamp, Left
-5	05073251AA	AR						*O0	CLIP, Z-Axis, Visor & Grab Handle Attach, Visor and Grab Handle Attach
6	06035324	2						*O0	SCREW, .164-18x.75
7									HOOK, Coat
	5FS52TL2	2						*O0	[DV, L5]
	5FS52XDB	2						*O0	[DB]
	5FS52XT5	2						*O0	[T5]

GRAND CHEROKEE (WJ)

SERIES	LINE	BODY	ENGINE	TRANSMISSION
H = Laredo M = Sport P = Limited S = Overland	T = JEEP - 2WD J = JEEP - 4WD U = JEEP - 4WD (RHD)	74 = SPORT UTILITY 4-DR	ERH = Engine - 4.0L Power Tech I-6 EVA = Engine- 4.7L V8 MPI EVC = Engine - 4.7L HO V8 MPI ER0 = All 4.0L 6 Cyl. Gas EV0 = All 4.7L Gas	DGK = 4 Speed Auto, 42RE DGQ = 5 Speed Auto, 45RFE DG0 = All Automatic Transmissions

AR = use ase required - = Non illustrrated part

Headliner and Assist Handle
Figure IWJ-110

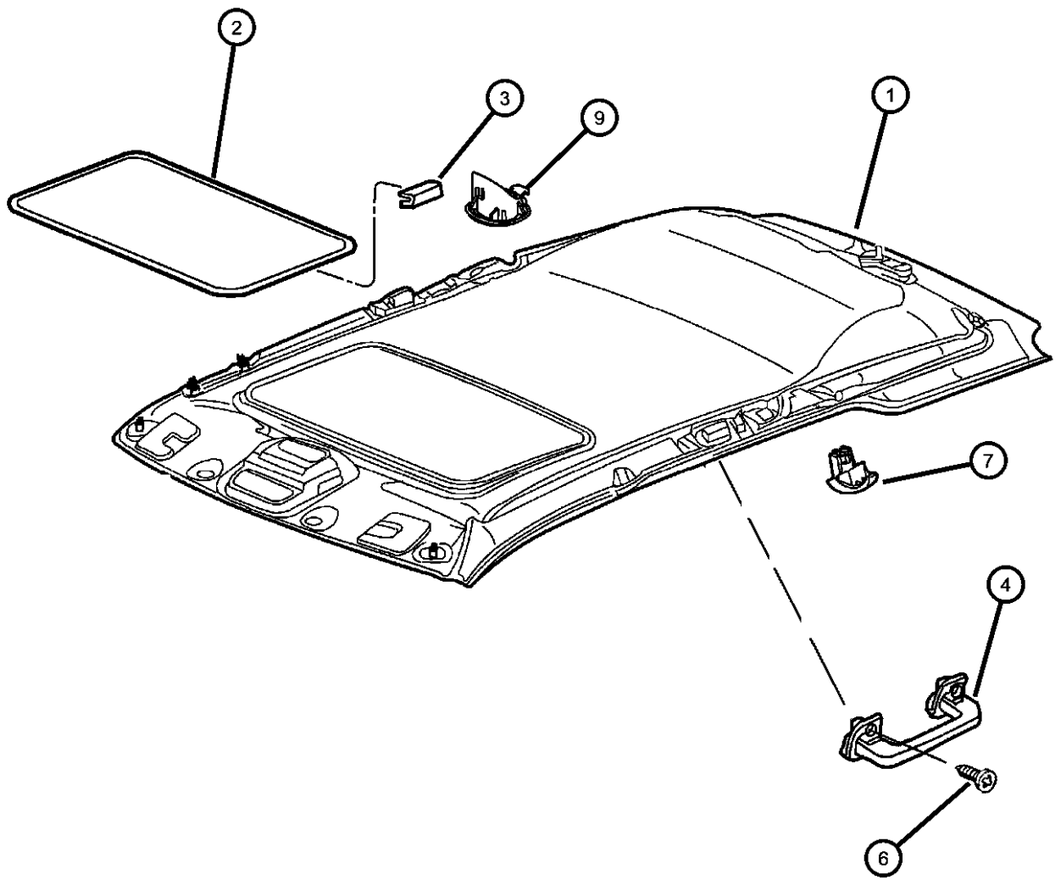

ITEM	PART NUMBER	QTY	LINE	SERIES	BODY	ENGINE	TRANS	TRIM	DESCRIPTION
-8	05016132AA	1						*O0	CLIP, Headliner Mounting, 'Z' Clip for Coat Hook Retension
9									BEZEL, Tether anchor, Rear Sides
	5GX261DBAB	1						*O0	[DB], Right
	5GX26TL2AB	1						*O0	[DV, L5, T5], Right
	5GX271DBAB	1						*O0	[DB], Left
	5GX27TL2AB	1						*O0	[DV, L5, T5], Left

GRAND CHEROKEE (WJ)

SERIES	LINE	BODY	ENGINE	TRANSMISSION
H = Laredo M = Sport P = Limited S = Overland	T = JEEP - 2WD J = JEEP - 4WD U = JEEP - 4WD (RHD)	74 = SPORT UTILITY 4-DR	ERH = Engine - 4.0L Power Tech I-6 EVA = Engine- 4.7L V8 MPI EVC = Engine - 4.7L HO V8 MPI ER0 = All 4.0L 6 Cyl. Gas EV0 = All 4.7L Gas	DGK = 4 Speed Auto, 42RE DGQ = 5 Speed Auto, 45RFE DG0 = All Automatic Transmissions

Sunvisor
Figure IWJ-120

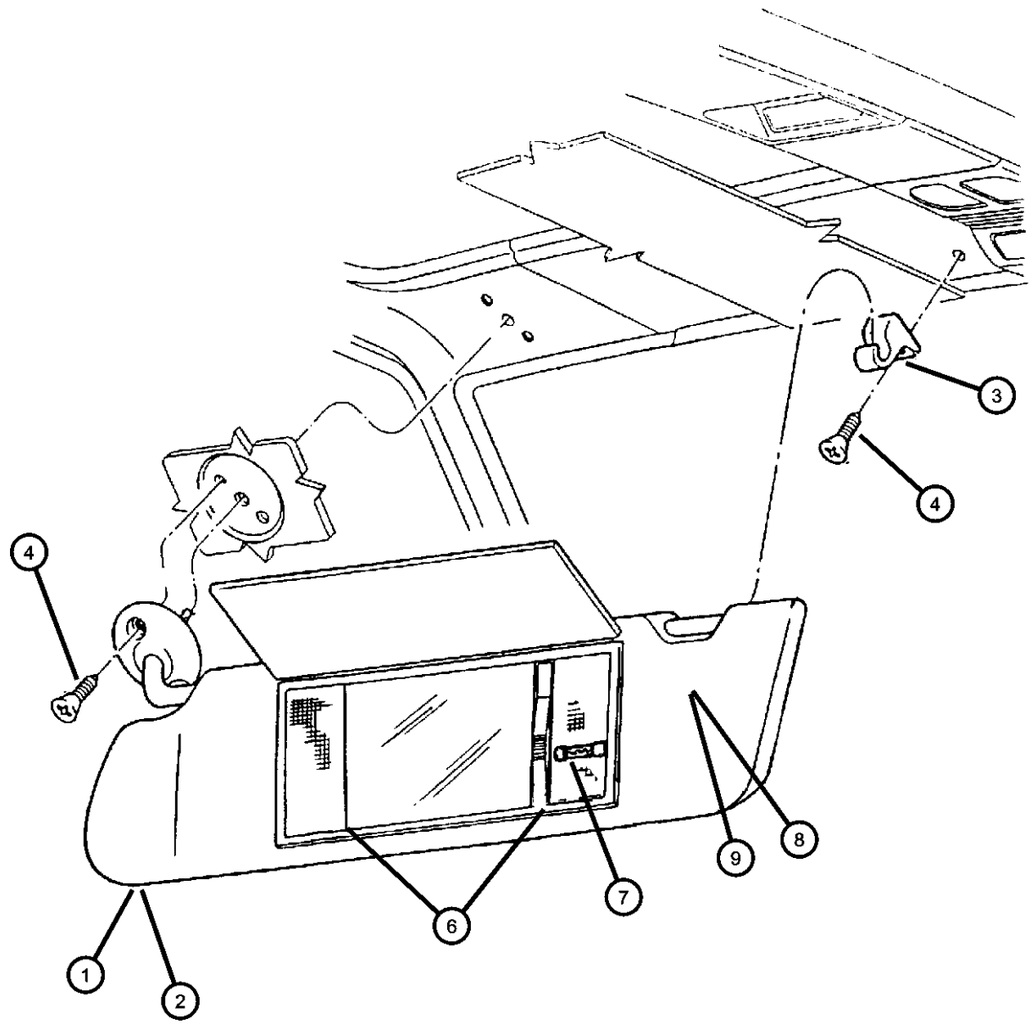

ITEM	PART NUMBER	QTY	LINE	SERIES	BODY	ENGINE	TRANS	TRIM	DESCRIPTION
1									VISOR, Illuminated
	5HG78TL2AB	1						*O0	[DV, L5], Up to 1/16/02, Right
	5HG78XD-BAB	1						*O0	[DB], Right
	5HG78XT5AB	1						*O0	[T5], Up to 1/16/02, Right
	5HG78TL2AC	1						*O0	[DV, L5, T5], After 1/16/02, Right
	5HG79TL2AB	1						*O0	[DV, L5], Up to 1/16/02, Left
	5HG79XD-BAB	1						*O0	[DB], Left
	5HG79XT5AB	1						*O0	[T5], Up to 1/16/02, Left
	5HG79TL2AC	1						*O0	[DV, L5, T5], After 1/16/02, Left
2									VISOR, W/Mirror
	5HG82TL2AB	1						*O0	[DV, L5], Up to 1/16/02, Right
	5HG82XT5AB	1						*O0	[T5], Up to 1/16/02, Right
	5HG82TL2AC	1						*O0	[DV, L5, T5], After 1/16/02, Right
	5HG83TL2AB	1						*O0	[DV, L5], Up to 1/16/02, Left
	5HG83XT5AB	1						*O0	[T5], Up to 1/16/02, Left
	5HG83TL2AC	1						*O0	[DV, L5, T5], After 1/16/02, Left
3									SUPPORT, Visor
	5FS40TL2	2						*O0	[DV, L5]
	5FS40XDB	2						*O0	[DB]
	5FS40XT5	2						*O0	[T5]
4	06035324	2						*O0	SCREW, .164-18x.75
-5	05073251AA	6						*O0	CLIP, Z-Axis, Visor & Grab Handle Attach
6	04778794	1						*O0	LENS, Illuminated Visor
7	06501966	1						*O0	BULB, Sunvisor
8	04787437AA	2							LABEL, Air Bag Warning
9	55352825AA	1							LABEL, Visor Warning, CANADA ONLY, High Rollover Risk

GRAND CHEROKEE (WJ)

SERIES	LINE	BODY	ENGINE	TRANSMISSION
H = Laredo M = Sport P = Limited S = Overland	T = JEEP - 2WD J = JEEP - 4WD U = JEEP - 4WD (RHD)	74 = SPORT UTILITY 4-DR	ERH = Engine - 4.0L Power Tech I-6 EVA = Engine- 4.7L V8 MPI EVC = Engine - 4.7L HO V8 MPI ER0 = All 4.0L 6 Cyl. Gas EV0 = All 4.7L Gas	DGK = 4 Speed Auto, 42RE DGQ = 5 Speed Auto, 45RFE DG0 = All Automatic Transmissions

Front Trim Panels and Scuff Plates
Figure IWJ-210

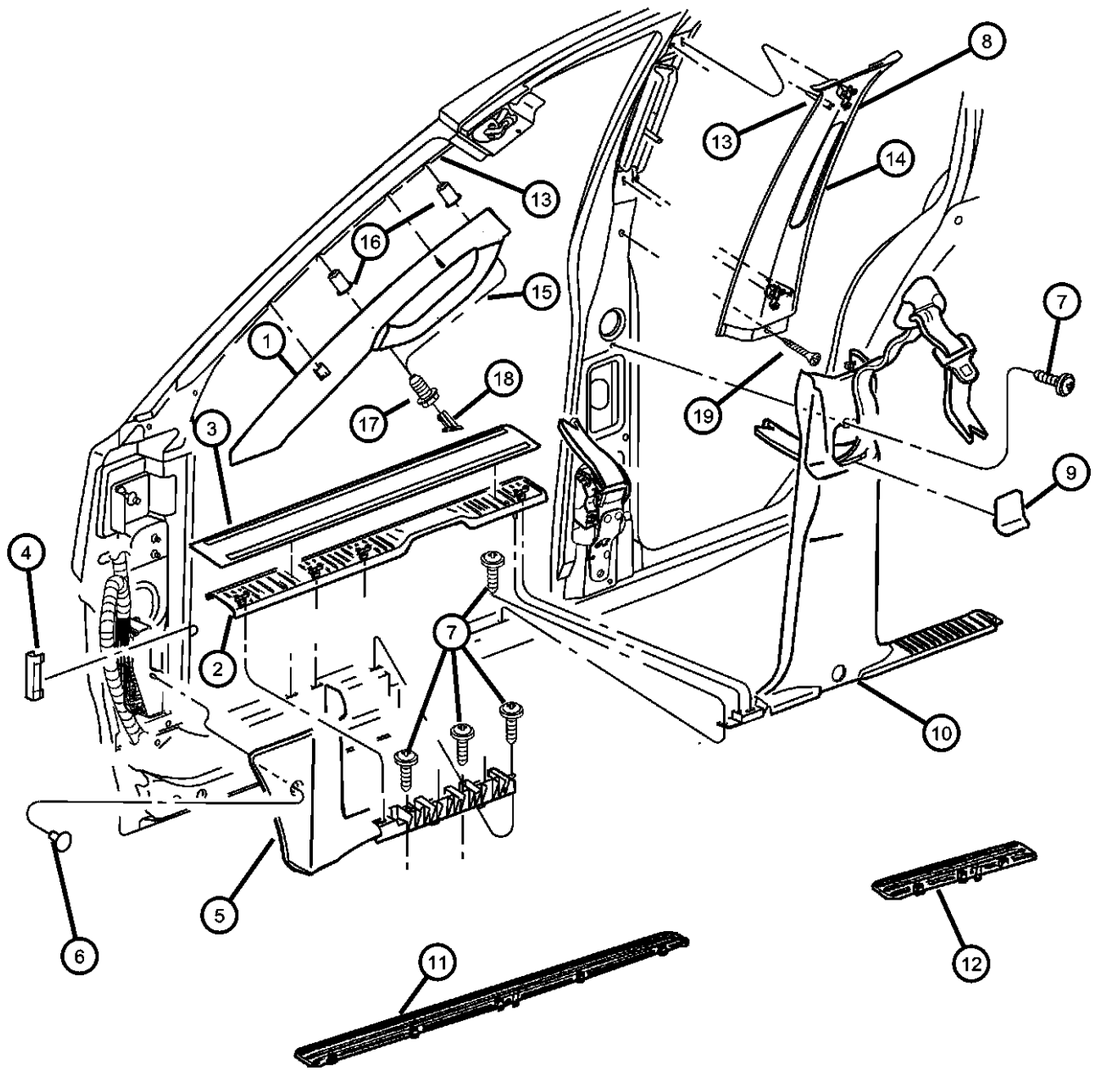

ITEM	PART NUMBER	QTY	LINE	SERIES	BODY	ENGINE	TRANS	TRIM	DESCRIPTION
1									MOLDING, A-PILLAR
	5HF62TL2AB	1						*O0	[DV, L5], Right
	5HF62XDBAB	1						*O0	[DB], Right
	5HF62XT5AB	1						*O0	[T5], Right
	5HF63TL2AB	1						*O0	[DV, L5], Left
	5HF63XDBAB	1						*O0	[DB], Left
	5HF63XT5AB	1						*O0	[T5], Left
2									SILL COVER, Interior
	5FX10WL5AC	1						*O0	[L5], Right
	5FX10XDVAC	1						*O0	[DB, DV], Right
	5FX10XT5AC	1						*O0	[T5], Right
	5FX11WL5AC	1						*O0	[L5], Left
	5FX11XDVAC	1						*O0	[DB, DV], Left
	5FX11XT5AC	1						*O0	[T5], Left
3	5FX11XT5AC	1							PROTECTOR, Door Opening, (NOT SERVICED),
4	55196878AB	2							CLIP, Trim Panel
5									PANEL, Cowl
	5FA60WL5AD	1						*O0	[L5], Right
	5FA60XDVAD	1						*O0	[DB, DV], Right
	5FA60XT5AD	1						*O0	[T5], Right
	5HM22WL5AA	1						*O0	[L5], Left
	5HM22XD-VAA	1						*O0	[DB, DV], Left
	5HM22XT5AA	1						*O0	[T5], Left
6	06503339	2							NUT, Plastic
7	06032723	6							SCREW, Self Tapping, M4.2x1.69x19.05
8									PANEL, B Pillar
	5GY46TL2AC	1						*O0	[DV, L5], Right
	5GY46XD-BAC	1						*O0	[DB], Right
	5GY46XT5AC	1						*O0	[T5], Right
	5GY47TL2AC	1						*O0	[DV, L5], Left
	5GY47XD-BAC	1						*O0	[DB], Left

GRAND CHEROKEE (WJ)

SERIES	LINE	BODY	ENGINE	TRANSMISSION
H = Laredo M = Sport P = Limited S = Overland	T = JEEP - 2WD J = JEEP - 4WD U = JEEP - 4WD (RHD)	74 = SPORT UTILITY 4-DR	ERH = Engine - 4.0L Power Tech I-6 EVA = Engine- 4.7L V8 MPI EVC = Engine - 4.7L HO V8 MPI ER0 = All 4.0L 6 Cyl. Gas EV0 = All 4.7L Gas	DGK = 4 Speed Auto, 42RE DGQ = 5 Speed Auto, 45RFE DG0 = All Automatic Transmissions

AR = use ase required - = Non illustrrated part

Front Trim Panels and Scuff Plates
Figure IWJ-210

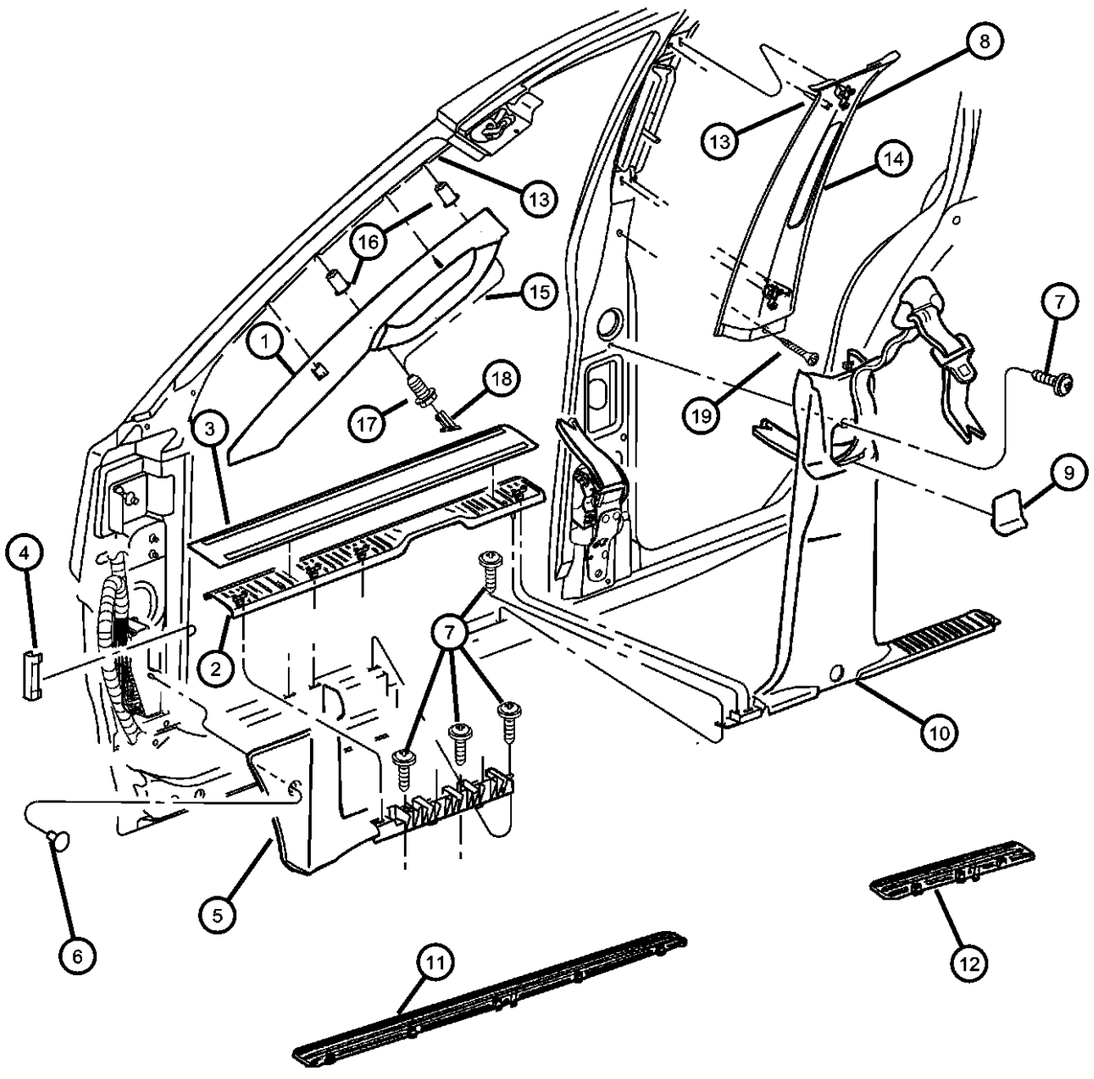

ITEM	PART NUMBER	QTY	LINE	SERIES	BODY	ENGINE	TRANS	TRIM	DESCRIPTION
	5GY47XT5AC	1						*O0	[T5], Left
9									COVER, B Pillar Trim Panel
	5FP86WL5	2						*O0	[L5]
	5FP86XDV	2						*O0	[DB, DV]
	5FP86XT5	2						*O0	[T5]
10									PANEL, B Pillar Lower Trim
	5FW54WL5AB	1						*O0	[L5], Right
	5FW54XDVAB	1						*O0	[DB, DV], Right
	5FW54XT5AB	1						*O0	[T5], Right
	5FW55WL5AB	1						*O0	[L5], Left
	5FW55XDVAB	1						*O0	[DB, DV], Left
	5FW55XT5AB	1						*O0	[T5], Left
11	5GH22DX9AA	2						*O0	PLATE, Front Door Scuff
12	5GH23DX9AA	2						*O0	PLATE, Rear Door Scuff
13	06506778AA	2						*O0	CLIP, Trim Panel
14									ADJUSTER, Seat Belt Turning Loop, Slider, Also serviced in B Trim Panel, Item #8
	5HD92TL2AB	1						*O0	[DV, L5]
	5HD92XD-BAB	1						*O0	[DB]
	5HD92XT5AB	1						*O0	[T5]
15									HANDLE, Roof Grab
	5HD63TL2AB	1						*O0	[DV, L5]
	5HD63XD-BAB	1						*O0	[DB]
	5HD63XT5AB	1						*O0	[T5]
16	06505201AA	4							NUT
17	06507518AA	4							SCREW
18									PLUG, Assist and Grab Handle
	5HK67TL2AB	4						*O0	[DV, L5]
	5HK67XDBAB	4						*O0	[DB]
	5HK67XT5AB	4						*O0	[T5]
19	00154806	2							SCREW, Round Head, .164-15x1.00

GRAND CHEROKEE (WJ)

SERIES	LINE	BODY	ENGINE	TRANSMISSION
H = Laredo M = Sport P = Limited S = Overland	T = JEEP - 2WD J = JEEP - 4WD U = JEEP - 4WD (RHD)	74 = SPORT UTILITY 4-DR	ERH = Engine - 4.0L Power Tech I-6 EVA = Engine- 4.7L V8 MPI EVC = Engine - 4.7L HO V8 MPI ER0 = All 4.0L 6 Cyl. Gas EV0 = All 4.7L Gas	DGK = 4 Speed Auto, 42RE DGQ = 5 Speed Auto, 45RFE DG0 = All Automatic Transmissions

Rear Trim Panels
Figure IWJ-220

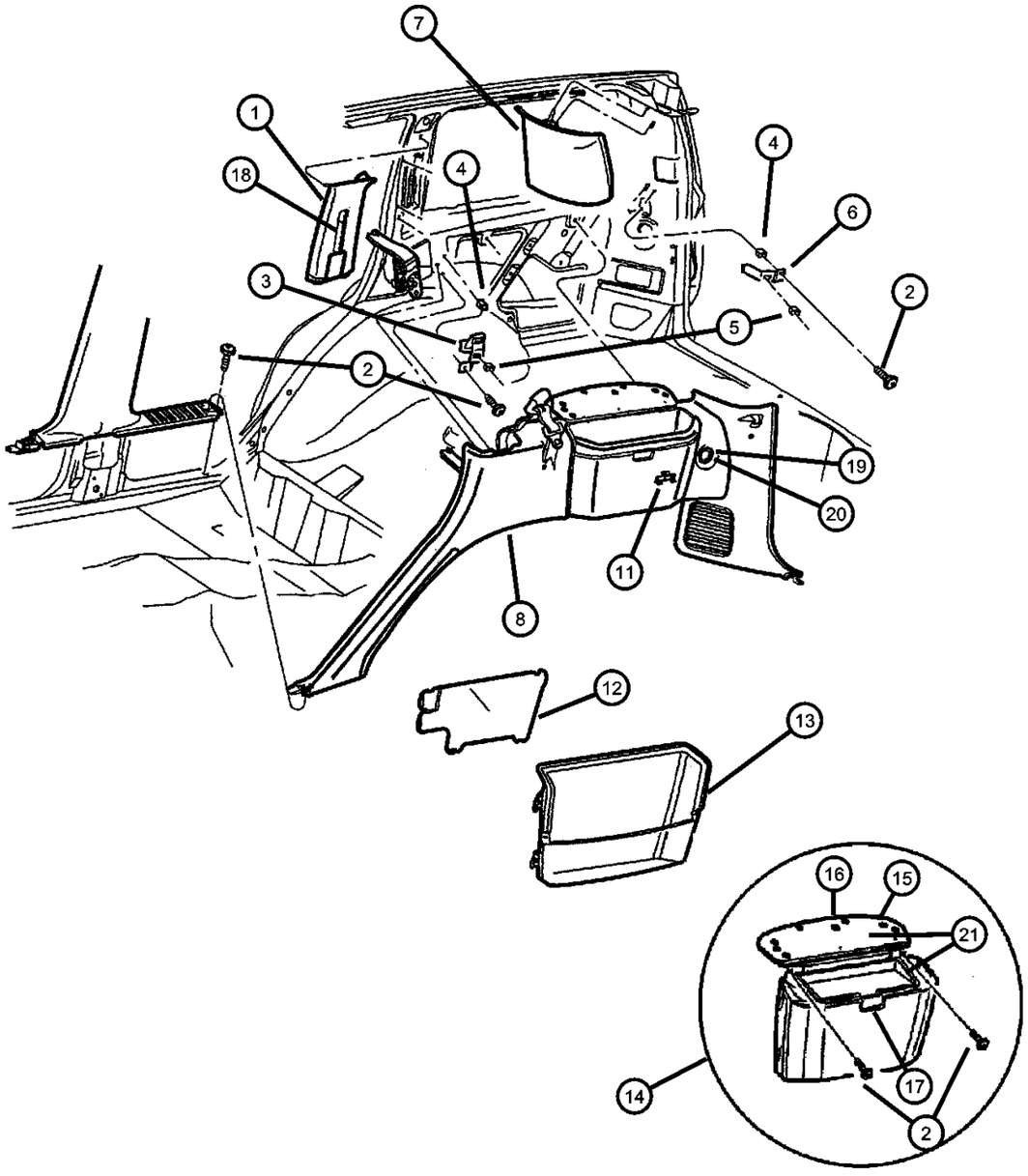

ITEM	PART NUMBER	QTY	LINE	SERIES	BODY	ENGINE	TRANS	TRIM	DESCRIPTION
1									PANEL, C Pillar
	5GY48TL2AA	1						*O0	[DV, L5], Right
	5GY48XD-BAA	1						*O0	[DB], Right
	5GY48XT5AA	1						*O0	[T5], Right
	5GY49TL2AA	1						*O0	[DV, L5], Left
	5GY49XD-BAA	1						*O0	[DB], Left
	5GY49XT5AA	1						*O0	[T5], Left
2	06032723	6							SCREW, Self Tapping, M4.2x1.69x19.05
3	55196742AB	2							BRACKET, Quarter TrimFront
4	06035498	2							NUT, Spring Type, .164-7.5
5	06035773	2							NUT
6	55196744AB	2							BRACKET, Quarter TrimRear
7									PANEL, D Pillar Trim
	5FA72WL5AB	1						*O0	[L5], Right
	5FA72XDVAB	1						*O0	[DB, DV], Right
	5FA72XT5AB	1						*O0	[T5], Right
	5FA73WL5AB	1						*O0	[L5], Left
	5FA73XDVAB	1						*O0	[DB, DV], Left
	5FA73XT5AB	1						*O0	[T5], Left
8									PANEL, Quarter Trim
	5HD131DVAB	1						*O0	[DB, DV], With Velcro Washer, Left
	5HD13WL5AB	1						*O0	[L5], With Velcro Washer, Left
	5HD13XT5AB	1						*O0	[T5], With Velcro Washer, Left
	5HD131DVAE	1						*O0	[DB, DV], Without Velcro Washer, Left
	5HD13WL5AE	1						*O0	[L5], Without Velcro Washer, Left
	5HD13XT5AE	1						*O0	[T5], Without Velcro Washer, Left
	5HD141DVAB	1						*O0	[DB, DV], With Velcro Washer, Right
	5HD141L5AB	1						*O0	[L5], With Velcro Washer, Right
	5HD141T5AB	1						*O0	[T5], With Velcro Washer, Right
	5HD141DVAE	1						*O0	[DB, DV], Without Velcro Washer, Right

GRAND CHEROKEE (WJ)

SERIES	LINE	BODY	ENGINE	TRANSMISSION
H = Laredo M = Sport P = Limited S = Overland	T = JEEP - 2WD J = JEEP - 4WD U = JEEP - 4WD (RHD)	74 = SPORT UTILITY 4-DR	ERH = Engine - 4.0L Power Tech I-6 EVA = Engine- 4.7L V8 MPI EVC = Engine - 4.7L HO V8 MPI ER0 = All 4.0L 6 Cyl. Gas EV0 = All 4.7L Gas	DGK = 4 Speed Auto, 42RE DGQ = 5 Speed Auto, 45RFE DG0 = All Automatic Transmissions

Rear Trim Panels
Figure IWJ-220

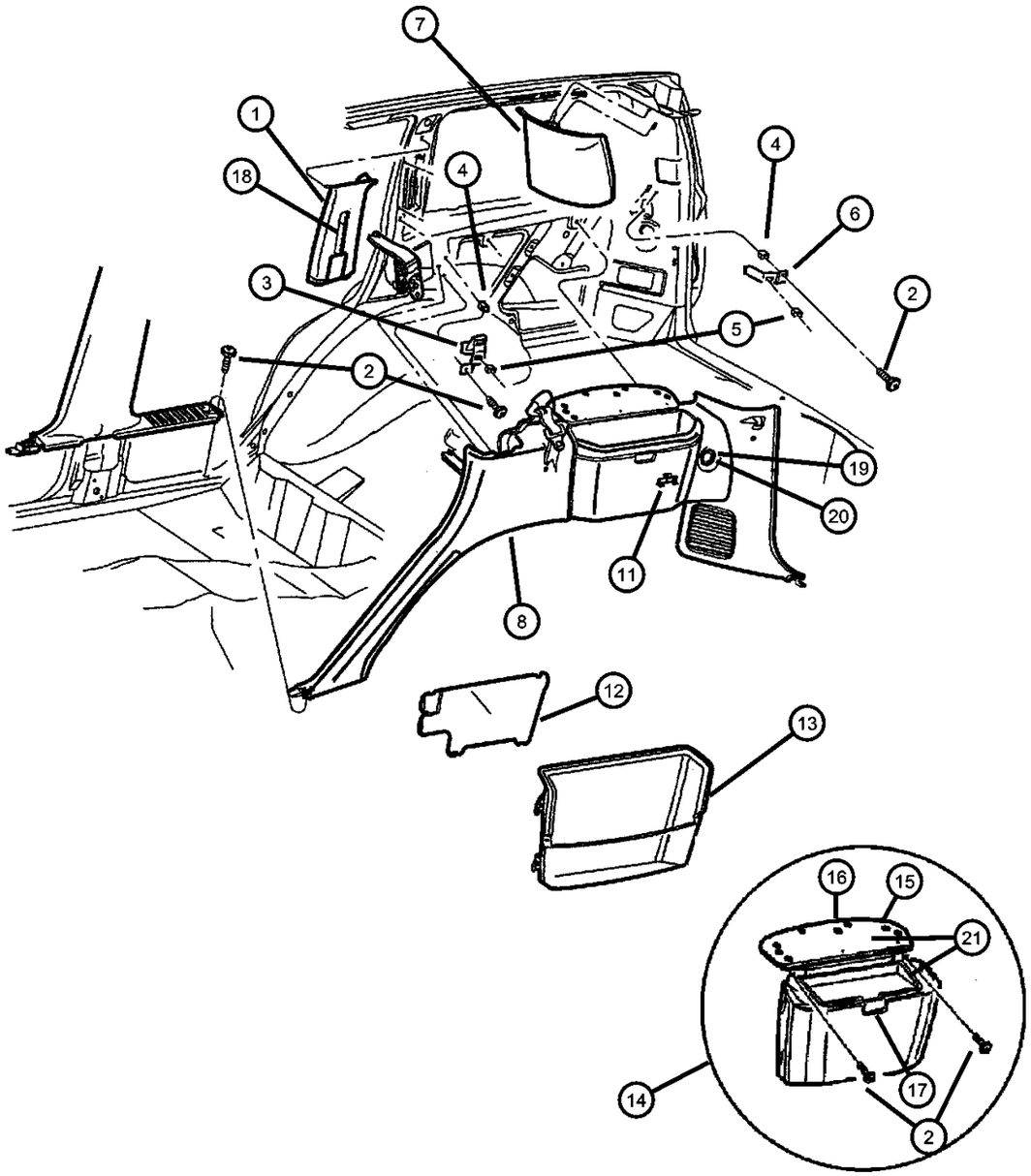

ITEM	PART NUMBER	QTY	LINE	SERIES	BODY	ENGINE	TRANS	TRIM	DESCRIPTION
	5HD141L5AE	1						*O0	[L5], Without Velcro Washer, Right
	5HD141T5AE	1						*O0	[T5], Without Velcro Washer, Right
-9	06505675AA	1						*O0	CLIP, Molding
-10	06036148AA	1						*O0	RIVET, Blind, Three Leg
11	55196901AB	4							LOOP, Cargo Tie Down
12									COVER, Bolt
	5FY38WL5AA	1						*O0	[L5]
	5FY38XDVAA	1						*O0	[DB, DV]
	5FY38XT5AA	1						*O0	[T5]
13									BIN, Storage, Cover
	5FS14WL5	1						*O0	[L5]
	5FS14XDV	1						*O0	[DB, DV]
	5FS14XT5	1						*O0	[T5]
14									BIN, Storage, Quarter Panel
	5FW371DVAD	1						*O0	[DB, DV]
	5FW371L5AD	1						*O0	[L5]
	5FW371T5AD	1						*O0	[T5]
15	04754478	4						*O0	BUMPER, Armrest Lid
16									DOOR
	5FS20WL5	1						*O0	[L5]
	5FS20XDV	1						*O0	[DB, DV]
	5FS20XT5	1						*O0	[T5]
17	55196620	1						*O0	LATCH, Storage Bin Lid
18									ADJUSTER, Seat Belt Turning Loop, Sider, Also seviced in Item #1
	5HD92TL2AB	1						*O0	[DV, L5]
	5HD92XD-BAB	1						*O0	[DB]
	5HD92XT5AB	1						*O0	[T5]
19	04685591	1							CAP, Cigar Lighter, Power Outlet, Rear
20	0HX32DX9AB	1						*O0	PLUG, 12 V-Outlet
21	5FS21DX9AC	1						*O0	LID, Storage Bin

GRAND CHEROKEE (WJ)

SERIES	LINE	BODY	ENGINE	TRANSMISSION
H = Laredo M = Sport P = Limited S = Overland	T = JEEP - 2WD J = JEEP - 4WD U = JEEP - 4WD (RHD)	74 = SPORT UTILITY 4-DR	ERH = Engine - 4.0L Power Tech I-6 EVA = Engine- 4.7L V8 MPI EVC = Engine - 4.7L HO V8 MPI ER0 = All 4.0L 6 Cyl. Gas EV0 = All 4.7L Gas	DGK = 4 Speed Auto, 42RE DGQ = 5 Speed Auto, 45RFE DG0 = All Automatic Transmissions

AR = use ase required - = Non illustrrated part

Side Air Bag Curtain
Figure IWJ-230

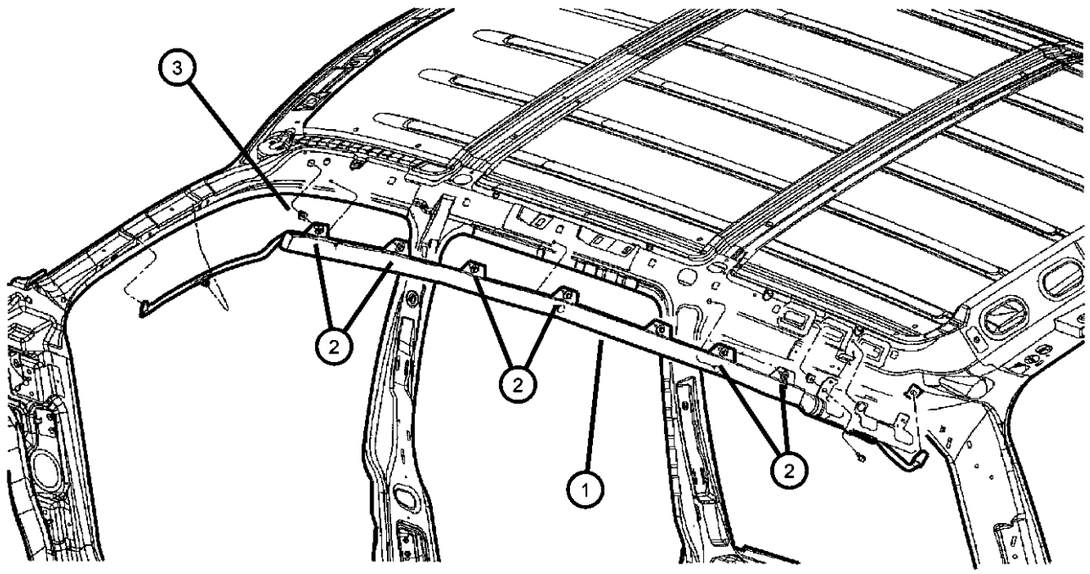

ITEM	PART NUMBER	QTY	LINE	SERIES	BODY	ENGINE	TRANS	TRIM	DESCRIPTION
1									AIR BAG, Side Curtain
	55116436AB	1							Right
	55116437AB	1							Left
2	55116437AB	1							SCREW AND WASHER, M6x1.00x18.50, (NOT SERVICED)
3	55116437AB	1							NUT, 22.0 Wide x 14.7 x 10.2 Height, (NOT SERVICED)

GRAND CHEROKEE (WJ)

SERIES	LINE	BODY	ENGINE	TRANSMISSION
H = Laredo M = Sport P = Limited S = Overland	T = JEEP - 2WD J = JEEP - 4WD U = JEEP - 4WD (RHD)	74 = SPORT UTILITY 4-DR	ERH = Engine - 4.0L Power Tech I-6 EVA = Engine- 4.7L V8 MPI EVC = Engine - 4.7L HO V8 MPI ER0 = All 4.0L 6 Cyl. Gas EV0 = All 4.7L Gas	DGK = 4 Speed Auto, 42RE DGQ = 5 Speed Auto, 45RFE DG0 = All Automatic Transmissions

Carpet and Insulation
Figure IWJ-310

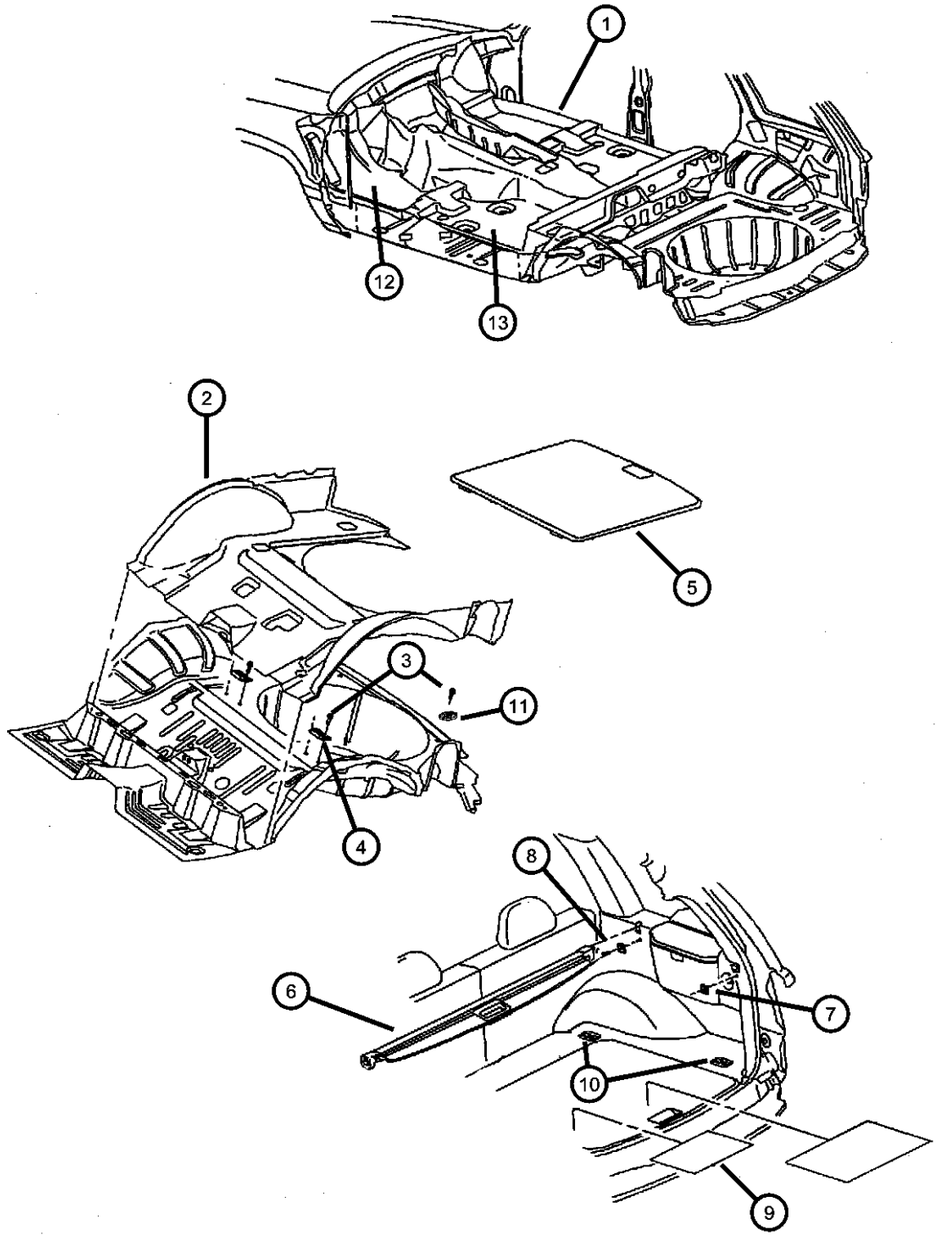

ITEM	PART NUMBER	QTY	LINE	SERIES	BODY	ENGINE	TRANS	TRIM	DESCRIPTION
1									CARPET, Front Floor
	5FA14WL8AE	1						*O0	[L5]
	5FA14XDVAE	1						*O0	[DB, DV]
	5FA14XTMAE	1						*O0	[T5]
2									CARPET, Cargo Floor
	5FS70WL8AE	1						*O0	[L5]
	5FS70XDVAE	1						*O0	[DB, DV]
	5FS70XTMAE	1						*O0	[T5]
3	06035122	8							RIVET, .187x.70 Black
4	55196748AA	2							BRACKET, Spare Tire, Hinge Cover
5									COVER, Spare Tire
	5HB541DVAB	1						*O0	[DB, DV]
	5HB541L8AB	1						*O0	[L5]
	5HB541TMAB	1						*O0	[T5]
6									COVER, Cargo Compartment
	5FS271DVAB	1						*O0	[DB, DV]
	5FS271L5AB	1						*O0	[L5]
	5FS271T5AB	1						*O0	[T5]
7	55196901AB	4							LOOP, Cargo Tie Down
8	55196901AB	4							SCREW, [.164-18x1.625], (NOT SERVICED)
9	55196839AB	1							NET, Cargo
10	05015592AA	1						*O0	LOOP, Cargo Tie Down
11	55196832AB	2							RETAINER, Dual Lock
12									MAT KIT, Floor - Front
	82206491	1			74			*O0	[T5]
	82207427	1							[DV]
13									MAT KIT, Floor - Rear
	82206492	1			74			*O0	[T5]
	82207428	1							[DV]
-14	5GJ93XDVAA	1		S				*O0	MAT KIT, Floor, OverlandFront and Rear
-15	55196834AA	1						*O0	CLIP, Carpet

GRAND CHEROKEE (WJ)

SERIES	LINE	BODY	ENGINE	TRANSMISSION
H = Laredo M = Sport P = Limited S = Overland	T = JEEP - 2WD J = JEEP - 4WD U = JEEP - 4WD (RHD)	74 = SPORT UTILITY 4-DR	ERH = Engine - 4.0L Power Tech I-6 EVA = Engine- 4.7L V8 MPI EVC = Engine - 4.7L HO V8 MPI ER0 = All 4.0L 6 Cyl. Gas EV0 = All 4.7L Gas	DGK = 4 Speed Auto, 42RE DGQ = 5 Speed Auto, 45RFE DG0 = All Automatic Transmissions

Door Trim Panels
Figure IWJ-410

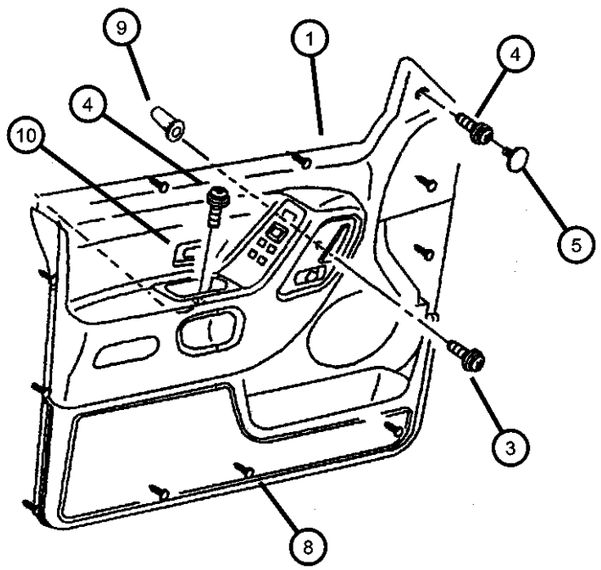

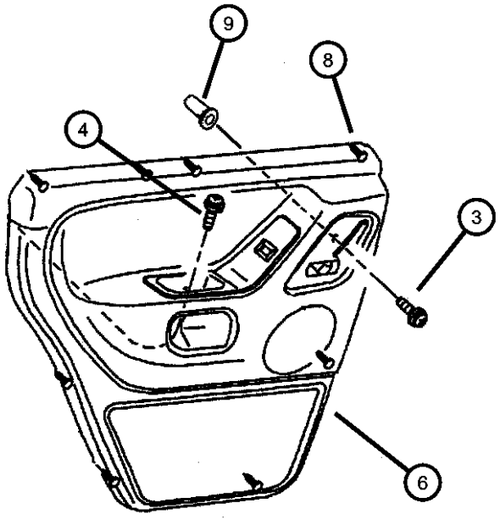

ITEM	PART NUMBER	QTY	LINE	SERIES	BODY	ENGINE	TRANS	TRIM	DESCRIPTION
Notes: Pad printing is the picture of the window or door lock. Please note the up to and after dates may not be precise, view door trim panels closely before ordering.									
1									PANEL, Front Door Trim, See Note
	0WD881DBAA	1		S				*O0	[DB], Woodgrain Not Included, With Vinyl Upper Bolster, Up to 10/6/01, Right
	0WD891DBAA	1		S				*O0	[DB], Woodgrain Not Included, With Vinyl Upper Bolster, Up to 10/6/01, Left
	0WY621DVAA	1		H				*O0	[DV], Without Carpet, With Pad Printing, Up to 10/6/01, Right
		1		M				*O0	[DV], With Pad Printing, Up to 10/6/01, Right
	0WY621L5AA	1		H				*O0	[L5], Without Carpet, With Pad Printing, Up to 10/6/01, Right
		1		M				*O0	[L5], With Pad Printing, Up to 10/6/01, Right
	0WY621T5AA	1		H				*O0	[T5], Without Carpet, With Pad Printing, Up to 10/6/01, Right
		1		M				*O0	[T5], With Pad Printing, Up to 10/6/01, Right
	0WY631DVAA	1		H				*O0	[DV], Without Carpet, Left
		1		M				*O0	[DV], Without Carpet, Left
	0WY631L5AA	1		H				*O0	[L5], Without Carpet, Left
		1		M				*O0	[L5], Without Carpet, Left
	0WY631T5AA	1		H				*O0	[T5], Without Carpet, Left
		1		M				*O0	[T5], Without Carpet, Left
	0WY921DVAA	1		P				*O0	[DV], Without Infinity Badge, With Vinyl Upper Bolster, Up to 10/6/01, Right
	0WY921L5AA	1		P				*O0	[L5], Without Infinity Badge, With Vinyl Upper Bolster, Up to 10/6/01, Right
	0WY921T5AA	1		P				*O0	[T5], Without Infinity Badge, With Vinyl Upper Bolster, Up to 10/6/01, Right
	0WY931DVAA	1		P				*O0	[DV], Without Infinity Badge, With Vinyl Upper Bolster, Up to 10/6/01, Left
	0WY931L5AA	1		P				*O0	[L5], Without Infinity Badge, With Vinyl Upper Bolster, Up to 10/6/01, Left

GRAND CHEROKEE (WJ)

SERIES	LINE	BODY	ENGINE	TRANSMISSION
H = Laredo M = Sport P = Limited S = Overland	T = JEEP - 2WD J = JEEP - 4WD U = JEEP - 4WD (RHD)	74 = SPORT UTILITY 4-DR	ERH = Engine - 4.0L Power Tech I-6 EVA = Engine- 4.7L V8 MPI EVC = Engine - 4.7L HO V8 MPI ER0 = All 4.0L 6 Cyl. Gas EV0 = All 4.7L Gas	DGK = 4 Speed Auto, 42RE DGQ = 5 Speed Auto, 45RFE DG0 = All Automatic Transmissions

Door Trim Panels
Figure IWJ-410

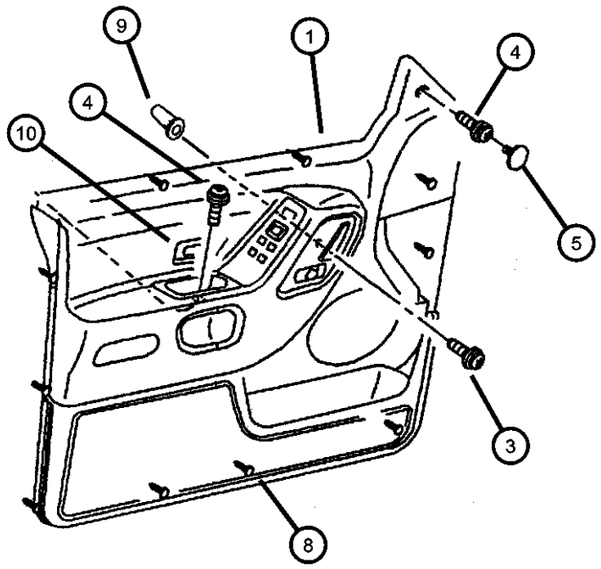

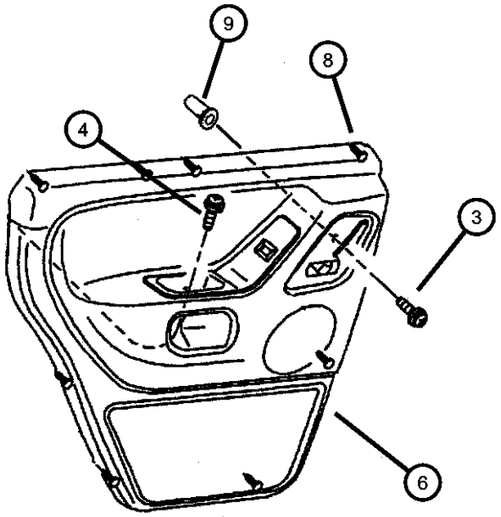

ITEM	PART NUMBER	QTY	LINE	SERIES	BODY	ENGINE	TRANS	TRIM	DESCRIPTION
	0WY931T5AA	1		P				*O0	[T5], Without Infinity Badge, With Vinyl Upper Bolster, Up to 10/6/01, Left
	0XE781DBAA	1		S				*O0	[DB], Woodgrain Not Included, With Hard Plastic Upper Bolster, After 10/6/01, Right
	0XE791DBAA	1		S				*O0	[DB], Woodgrain Not Included, With Hard Plastic Upper Bolster, After 10/6/01, Left
	0XE841DVAA	1		H				*O0	[DV], Without Carpet, Without Pad Printing, After 10/6/01, Right
		1		M				*O0	[DV], Without Pad Printing, After 10/6/01, Right
	0XE841L5AA	1		H				*O0	[L5], Without Carpet, Without Pad Printing, After 10/6/01, Right
		1		M				*O0	[L5], Without Pad Printing, After 10/6/01, Right
	0XE841T5AA	1		H				*O0	[T5], Without Carpet, Without Pad Printing, After 10/6/01, Right
		1		M				*O0	[T5], Without Pad Printing, After 10/6/01, Right
	0XE881DVAA	1		P				*O0	[DV], Without Infinity Badge, With Hard Plastic Upper Bolster, After 10/6/01, Right
	0XE881L5AA	1		P				*O0	[L5], Without Infinity Badge, With Hard Plastic Upper Bolster, After 10/6/01, Right
	0XE881T5AA	1		P				*O0	[T5], Without Infinity Badge, With Hard Plastic Upper Bolster, After 10/6/01, Right
	0XE891DVAA	1		P				*O0	[DV], Without Infinity Badge, With Hard Plastic Upper Bolster, After 10/6/01, Left
	0XE891L5AA	1		P				*O0	[L5], Without Infinity Badge, With Hard Plastic Upper Bolster, After 10/6/01, Left
	0XE891T5AA	1		P				*O0	[T5], Without Infinity Badge, With Hard Plastic Upper Bolster, After 10/6/01, Left
-2									MOLDING, Front Door, Woodgrain
	5GY85AAAAA	1		S				*O0	Left
	5GY86AAAAA	1		S				*O0	Right
3	06505156AA	2							SCREW, M5X0.8X16.00
4	06032723	6							SCREW, Self Tapping, M4.2x1.69x19.05

GRAND CHEROKEE (WJ)

SERIES	LINE	BODY	ENGINE	TRANSMISSION
H = Laredo M = Sport P = Limited S = Overland	T = JEEP - 2WD J = JEEP - 4WD U = JEEP - 4WD (RHD)	74 = SPORT UTILITY 4-DR	ERH = Engine - 4.0L Power Tech I-6 EVA = Engine- 4.7L V8 MPI EVC = Engine - 4.7L HO V8 MPI ER0 = All 4.0L 6 Cyl. Gas EV0 = All 4.7L Gas	DGK = 4 Speed Auto, 42RE DGQ = 5 Speed Auto, 45RFE DG0 = All Automatic Transmissions

Door Trim Panels
Figure IWJ-410

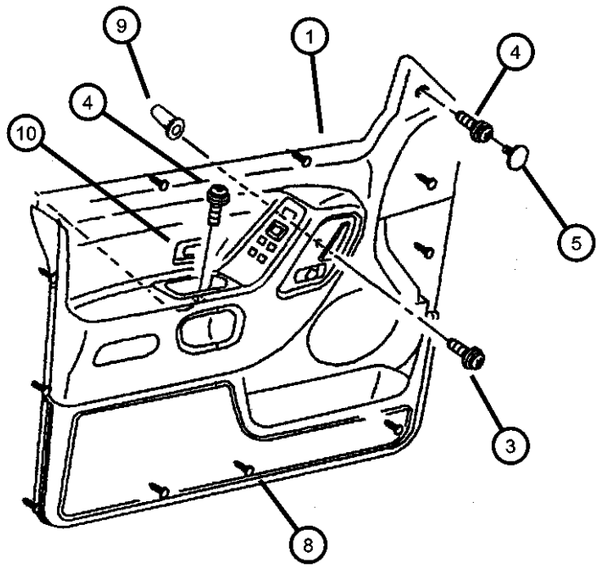

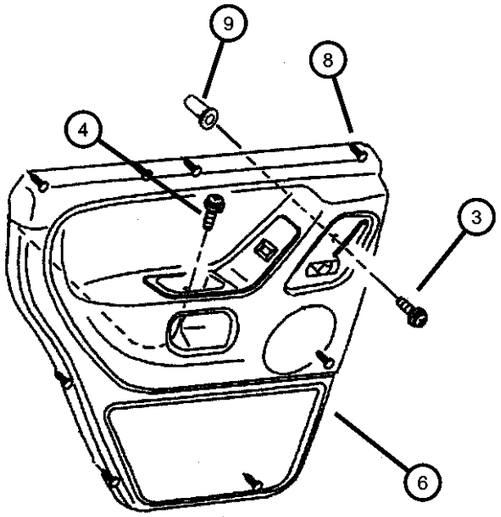

ITEM	PART NUMBER	QTY	LINE	SERIES	BODY	ENGINE	TRANS	TRIM	DESCRIPTION
5									PLUG, Door Trim Panel
	5FC11WL8	2						*O0	[L5]
	5FC11XDV	2						*O0	[DB, DV]
	5FC11XTM	2						*O0	[T5]
6									PANEL, Rear Door Trim, See Note
	0UD661DVAA	1		P				*O0	[DV], With Vinyl Upper Bolster, Up to 10/6/01, Right
	0UD661L5AA	1		P				*O0	[L5], With Vinyl Upper Bolster, Up to 10/6/01, Right
	0UD661T5AA	1		P				*O0	[T5], With Vinyl Upper Bolster, Up to 10/6/01, Right
	0UD671DVAA	1		P				*O0	[DV], With Vinyl Upper Bolster, Up to 10/6/01, Left
	0UD671L5AA	1		P				*O0	[L5], With Vinyl Upper Bolster, Up to 10/6/01, Left
	0UD671T5AA	1		P				*O0	[T5], With Vinyl Upper Bolster, Up to 10/6/01, Left
	0WR181DBAA	1		S				*O0	[DB], Woodgrain Not Included, With Vinyl Upper Bolster, Up to 10/6/01, Right
	0WR191DBAA	1		S				*O0	[DB], Woodgrain Not Included, With Vinyl Upper Bolster, Up to 10/6/01, Left
	0WY901DVAA	1		H				*O0	[DV], Without Carpet, With Pad Printing, Up to 10/6/01, Right
		1		M				*O0	[DV], With Pad Printing, Up to 10/6/01, Right
	0WY901L5AA	1		H				*O0	[L5], Without Carpet, With Pad Printing, Up to 10/6/01, Right
		1		M				*O0	[L5], With Pad Printing, Up to 10/6/01, Right
	0WY901T5AA	1		H				*O0	[T5], Without Carpet, With Pad Printing, Up to 10/6/01, Right
		1		M				*O0	[T5], With Pad Printing, Up to 10/6/01, Right
	0WY911DVAA	1		H				*O0	[DV], Without Carpet, With Pad Printing, Up to 10/6/01, Left
		1		M				*O0	[DV], With Pad Printing, Up to 10/6/01, Left
	0WY911L5AA	1		H				*O0	[L5], Without Carpet, With Pad Printing, Up to 10/6/01, Left
		1		M				*O0	[L5], With Pad Printing, Up to 10/6/01, Left

GRAND CHEROKEE (WJ)

SERIES	LINE	BODY	ENGINE	TRANSMISSION
H = Laredo M = Sport P = Limited S = Overland	T = JEEP - 2WD J = JEEP - 4WD U = JEEP - 4WD (RHD)	74 = SPORT UTILITY 4-DR	ERH = Engine - 4.0L Power Tech I-6 EVA = Engine- 4.7L V8 MPI EVC = Engine - 4.7L HO V8 MPI ER0 = All 4.0L 6 Cyl. Gas EV0 = All 4.7L Gas	DGK = 4 Speed Auto, 42RE DGQ = 5 Speed Auto, 45RFE DG0 = All Automatic Transmissions

Door Trim Panels
Figure IWJ-410

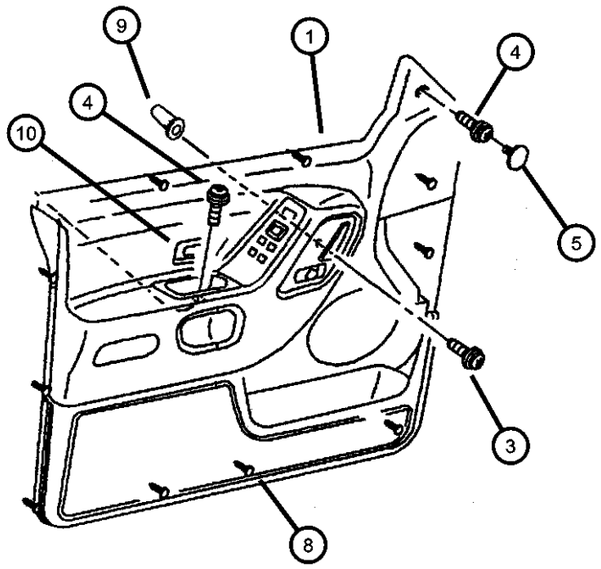

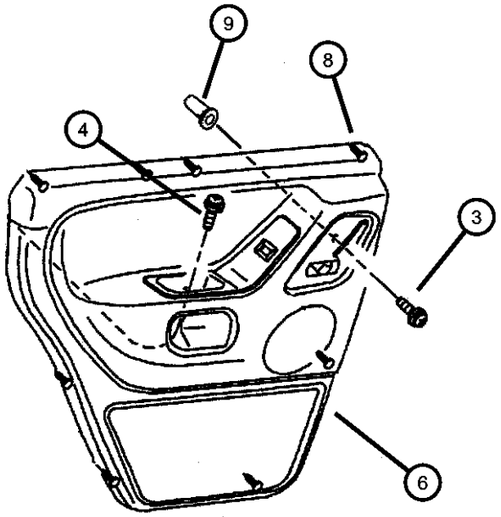

ITEM	PART NUMBER	QTY	LINE	SERIES	BODY	ENGINE	TRANS	TRIM	DESCRIPTION
	0WY911T5AA	1		H				*O0	[T5], Without Carpet, With Pad Printing, Up to 10/6/01, Left
		1		M				*O0	[T5], With Pad Printing, Up to 10/6/01, Left
	0XE761DBAA	1		S				*O0	[DB], Woodgrain Not Included, With Hard Plastic Upper Bolster, After 10/6/01, Right
	0XE771DBAA	1		S				*O0	[DB], Woodgrain Not Included, With Hard Plastic Upper Bolster, After 10/6/01, Left
	0XE901DVAA	1		P				*O0	[DV], With Hard Plastic Upper Bolster, After 10/6/01, Right
	0XE901L5AA	1		P				*O0	[L5], With Hard Plastic Upper Bolster, After 10/6/01, Right
	0XE901T5AA	1		P				*O0	[T5], With Hard Plastic Upper Bolster, After 10/6/01, Right
	0XE911DVAA	1		P				*O0	[DV], With Hard Plastic Upper Bolster, After 10/6/01, Left
	0XE911L5AA	1		P				*O0	[L5], With Hard Plastic Upper Bolster, After 10/6/01, Left
	0XE911T5AA	1		P				*O0	[T5], With Hard Plastic Upper Bolster, After 10/6/01, Left
	0XF161DVAA	1		H				*O0	[DV], Without Carpet, Without Pad Printing, After 10/6/01, Right
		1		M				*O0	[DV], Without Pad Printing, After 10/6/01, Right
	0XF161L5AA	1		H				*O0	[L5], Without Carpet, Without Pad Printing, After 10/6/01, Right
		1		M				*O0	[L5], Without Pad Printing, After 10/6/01, Right
	0XF161T5AA	1		H				*O0	[T5], Without Carpet, Without Pad Printing, After 10/6/01, Right
		1		M				*O0	[T5], Without Pad Printing, After 10/6/01, Right
	0XF171DVAA	1		H				*O0	[DV], Without Carpet, Without Pad Printing, After 10/6/01, Left
		1		M				*O0	[DV], Without Pad Printing, After 10/6/01, Left
	0XF171L5AA	1		H				*O0	[L5], Without Carpet, Without Pad Printing, After 10/6/01, Left
		1		M				*O0	[L5], Without Pad Printing, After 10/6/01, Left
	0XF171T5AA	1		H				*O0	[T5], Without Carpet, Without Pad Printing, After 10/6/01, Left
		1		M				*O0	[T5], Without Pad Printing, After 10/6/01, Left

GRAND CHEROKEE (WJ)

SERIES	LINE	BODY	ENGINE	TRANSMISSION
H = Laredo M = Sport P = Limited S = Overland	T = JEEP - 2WD J = JEEP - 4WD U = JEEP - 4WD (RHD)	74 = SPORT UTILITY 4-DR	ERH = Engine - 4.0L Power Tech I-6 EVA = Engine- 4.7L V8 MPI EVC = Engine - 4.7L HO V8 MPI ER0 = All 4.0L 6 Cyl. Gas EV0 = All 4.7L Gas	DGK = 4 Speed Auto, 42RE DGQ = 5 Speed Auto, 45RFE DG0 = All Automatic Transmissions

AR = use ase required - = Non illustrrated part

Door Trim Panels
Figure IWJ-410

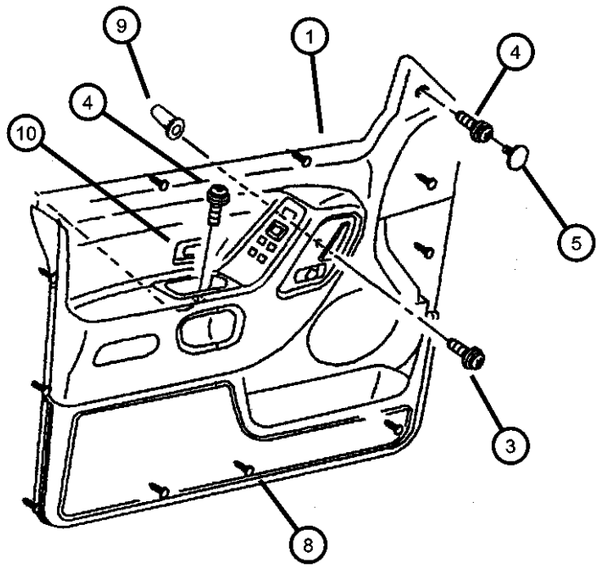

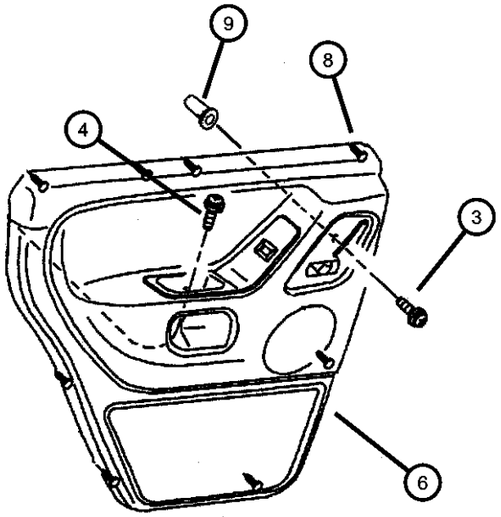

ITEM	PART NUMBER	QTY	LINE	SERIES	BODY	ENGINE	TRANS	TRIM	DESCRIPTION
-7									MOLDING, Rear Door, Woodgrain
	5GY87AAAAA	1		S				*O0	Left
	5GY88AAAAA	1		S				*O0	Right
8									FASTENER, Door Trim Panel
	06507055AA	11		P				*O0	Front, Door
		11		H				*O0	Front, Door
		11		S				*O0	Front, Door
		9		H				*O0	Rear, Door
		9		P				*O0	Rear, Door
		9		S				*O0	Rear, Door
9	06505201AA	2							NUT
10									BEZEL, Switch, Memory Seats
	0UH631DVAA	1		P				*O0	[DV]
	0UH631L5AA	1		P				*O0	[L5]
	0UH631T5AA	1		P				*O0	[T5]

GRAND CHEROKEE (WJ)

SERIES	LINE	BODY	ENGINE	TRANSMISSION
H = Laredo	T = JEEP - 2WD	74 = SPORT UTILITY 4-DR	ERH = Engine - 4.0L Power Tech I-6	DGK = 4 Speed Auto, 42RE
M = Sport	J = JEEP - 4WD		EVA = Engine- 4.7L V8 MPI	DGQ = 5 Speed Auto, 45RFE
P = Limited	U = JEEP - 4WD (RHD)		EVC = Engine - 4.7L HO V8 MPI	DG0 = All Automatic Transmissions
S = Overland			ER0 = All 4.0L 6 Cyl. Gas	
			EV0 = All 4.7L Gas	

Front Seat, Cloth, Trim Code [E7]
Figure IWJ-510

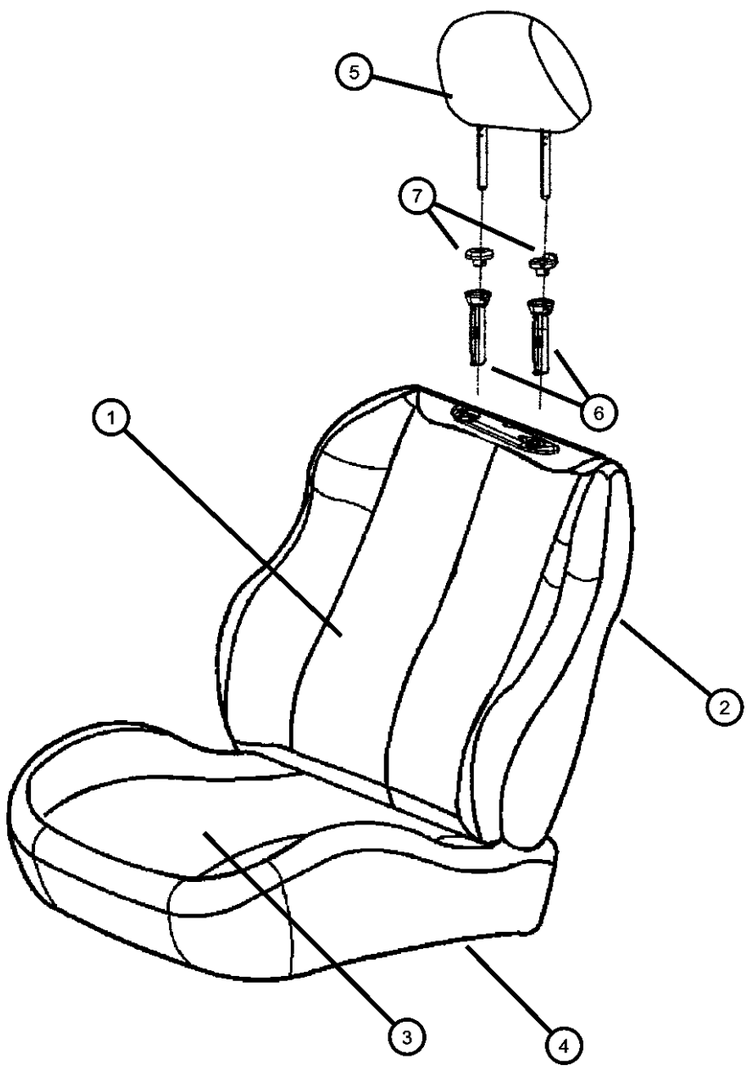

ITEM	PART NUMBER	QTY	LINE	SERIES	BODY	ENGINE	TRANS	TRIM	DESCRIPTION
1									COVER, Front Seat Back
	0WK261DVAA	2						*E7	[DV], Up to 12/12/01
	0WK261L5AA	2						*E7	[L5], Up to 1/3/02
	0WK261T5AA	2						*E7	[T5], Up to 1/17/02
	0XQ241DVAA	2						*E7	[DV], After 12/12/01
	0XQ241L5AA	2						*E7	[L5], After 1/3/02
	0XQ241T5AA	2						*E7	[T5], After 1/17/02
2									BACK, Front Seat
	0WK241DVAA	1						*E7	[DV], Up to 12/12/01, Right
	0WK241L5AA	1						*E7	[L5], Up to 1/3/02, Right
	0WK241T5AA	1						*E7	[T5], Up to 1/17/02, Right
	0WK251DVAA	1						*E7	[DV], Up to 12/12/01, Left
	0WK251L5AA	1						*E7	[L5], Up to 1/3/02, Left
	0WK251T5AA	1						*E7	[T5], Up to 1/17/02, Left
	0XQ221DVAA	1						*E7	[DV], After 12/12/01, Right
	0XQ221L5AA	1						*E7	[L5], After 1/3/02, Right
	0XQ221T5AA	1						*E7	[T5], After 1/17/02, Right
	0XQ231DVAA	1						*E7	[DV], After 12/12/01, Left
	0XQ231L5AA	1						*E7	[L5], After 1/3/02, Left
	0XQ231T5AA	1						*E7	[T5], After 1/17/02, Left
3									COVER AND PAD, Cushion
	0WK141DVAA	1						*E7	[DV], Right
	0WK141L5AA	1						*E7	[L5], Right
	0WK141T5AA	1						*E7	[T5], Right
	0WK151DVAA	1						*E7	[DV], Left
	0WK151L5AA	1						*E7	[L5], Left
	0WK151T5AA	1						*E7	[T5], Left
4									FRAME, Front Seat
	04856470	1						*E7	Right
	04856471	1						*E7	Left
5									HEADREST, Front
	0WK061DVAA	2						*E7	[DV]
	0WK061L5AA	2						*E7	[L5]

GRAND CHEROKEE (WJ)

SERIES	LINE	BODY	ENGINE	TRANSMISSION
H = Laredo M = Sport P = Limited S = Overland	T = JEEP - 2WD J = JEEP - 4WD U = JEEP - 4WD (RHD)	74 = SPORT UTILITY 4-DR	ERH = Engine - 4.0L Power Tech I-6 EVA = Engine- 4.7L V8 MPI EVC = Engine - 4.7L HO V8 MPI ER0 = All 4.0L 6 Cyl. Gas EV0 = All 4.7L Gas	DGK = 4 Speed Auto, 42RE DGQ = 5 Speed Auto, 45RFE DG0 = All Automatic Transmissions

Front Seat, Cloth, Trim Code [E7]
Figure IWJ-510

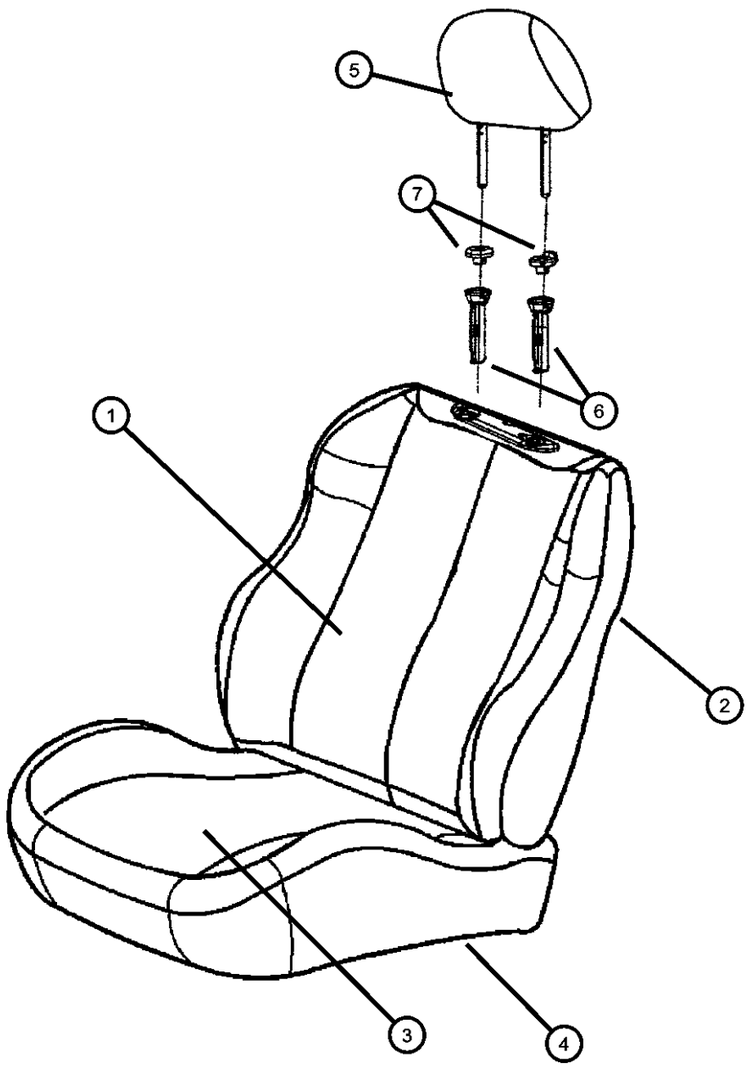

ITEM	PART NUMBER	QTY	LINE	SERIES	BODY	ENGINE	TRANS	TRIM	DESCRIPTION
	0WK061T5AA	2						*E7	[T5]
6	05013152AA	2						*E7	CYLINDER, Headrest
7									COVER, Headrest Sleeve
	0UK041DVAA	1						*E7	[DV], With Button
	0UK041L5AA	1						*E7	[L5], With Button
	0UK041T5AA	1						*E7	[T5], With Button
	0UK051DVAA	1						*E7	[DV], Without Button
	0UK051L5AA	1						*E7	[L5], Without Button
	0UK051T5AA	1						*E7	[T5], Without Button
-8	05018505AA	1							EXTENDER, Seat Belt

GRAND CHEROKEE (WJ)

SERIES	LINE	BODY	ENGINE	TRANSMISSION
H = Laredo M = Sport P = Limited S = Overland	T = JEEP - 2WD J = JEEP - 4WD U = JEEP - 4WD (RHD)	74 = SPORT UTILITY 4-DR	ERH = Engine - 4.0L Power Tech I-6 EVA = Engine- 4.7L V8 MPI EVC = Engine - 4.7L HO V8 MPI ER0 = All 4.0L 6 Cyl. Gas EV0 = All 4.7L Gas	DGK = 4 Speed Auto, 42RE DGQ = 5 Speed Auto, 45RFE DG0 = All Automatic Transmissions

Front Seat, Leather, Trim Code [JL]
Figure IWJ-520

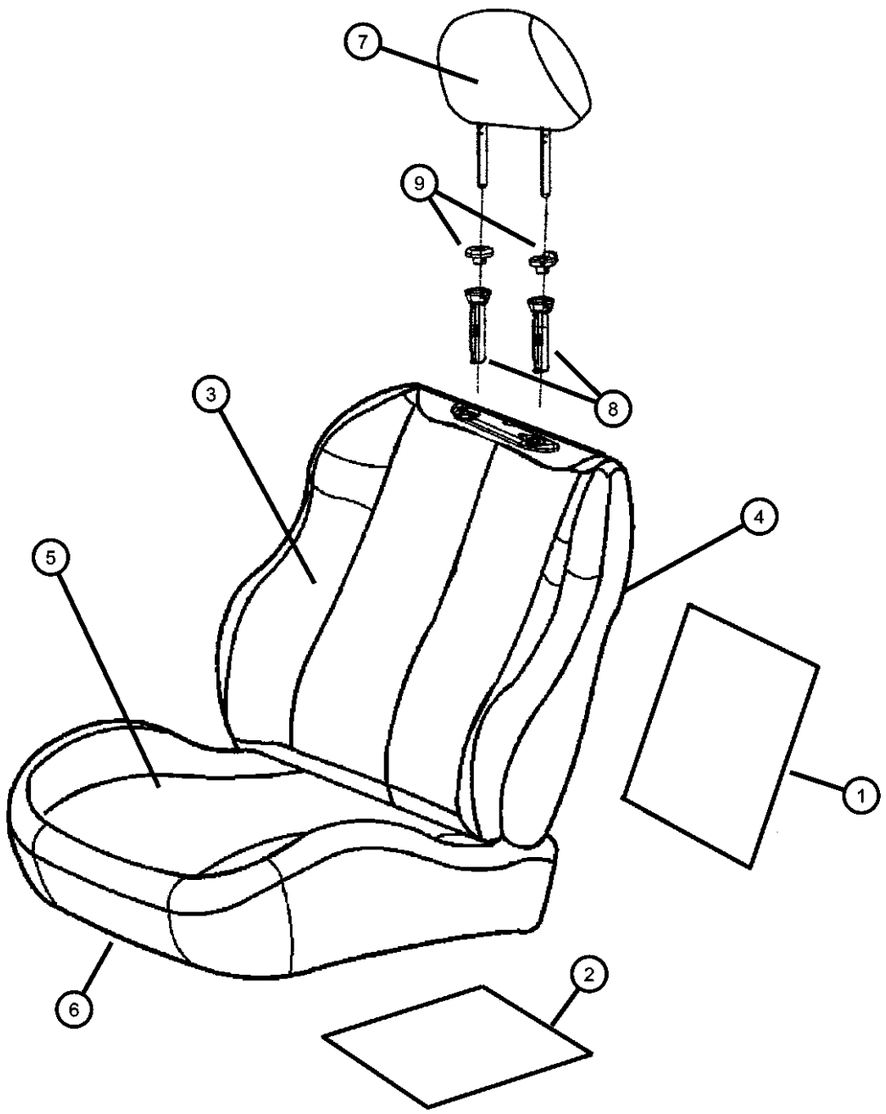

ITEM	PART NUMBER	QTY	LINE	SERIES	BODY	ENGINE	TRANS	TRIM	DESCRIPTION
Sales Codes:									
[JP2]= Power Seats 10-Way Power With Map Pocket.									
[JPT] = Power Seats, Driver and Passenger.									
[JPX] = Power Heated.									
[JTG] = Power 6-way, Heated.									
1	05072485AA	1						*JL	HEATER, Stick-on Pad, BackSeat Back
2									HEATER, Stick-on Pad, Cushion
	05072486AA	1						*JL	Up to 10/4/01, Cushion
	05072486AB	1						*JL	After 10/4/01, Cushion
3									COVER, Front Seat Back
	0WK361DVAA	2						*JL	[DV]
	0WK361L5AA	2						*JL	[L5]
	0WK361T5AA	2						*JL	[T5]
4									BACK, Front Seat
	0WK481DVAA	1						*JL	[DV], Includes Stick-on Heater Pad, Sales Code [JPX], Right
	0WK481L5AA	1						*JL	[L5], Includes Stick-on Heater Pad, Sales Code [JPX], Right
	0WK481T5AA	1						*JL	[T5], Includes Stick-on Heater Pad, Sales Code [JPX], Right
	0WK491DVAA	1						*JL	[DV], Includes Stick-on Heater Pad, Sales Code [JPX], Left
	0WK491L5AA	1						*JL	[L5], Includes Stick-on Heater Pad, Sales Code [JPX], Left
	0WK491T5AA	1						*JL	[T5], Includes Stick-on Heater Pad, Sales Code [JPX], Left
	0WK521DVAA	1						*JL	[DV], Non-Heated, Without Sales Code [JPX], Right
	0WK521L5AA	1						*JL	[L5], Non-Heated, Without Sales Code [JPX], Right
	0WK521T5AA	1						*JL	[T5], Non-Heated, Without Sales Code [JPX], Right
	0WK531DVAA	1						*JL	[DV], Non-Heated, Without Sales Code [JPX], Left
	0WK531L5AA	1						*JL	[L5], Non-Heated, Without Sales Code [JPX], Left
	0WK531T5AA	1						*JL	[T5], Non-Heated, Without Sales Code [JPX], Left
5									COVER AND PAD, Cushion
	0WK461DVAA	1						*JL	[DV], Includes Stick-on Heater Pad, Sales Code [JPX, JTG], Up to 10/4/01, Right

GRAND CHEROKEE (WJ)

SERIES	LINE	BODY	ENGINE	TRANSMISSION
H = Laredo	T = JEEP - 2WD	74 = SPORT UTILITY 4-DR	ERH = Engine - 4.0L Power Tech I-6	DGK = 4 Speed Auto, 42RE
M = Sport	J = JEEP - 4WD		EVA = Engine- 4.7L V8 MPI	DGQ = 5 Speed Auto, 45RFE
P = Limited	U = JEEP - 4WD (RHD)		EVC = Engine - 4.7L HO V8 MPI	DG0 = All Automatic Transmissions
S = Overland			ER0 = All 4.0L 6 Cyl. Gas	
			EV0 = All 4.7L Gas	

Front Seat, Leather, Trim Code [JL]
Figure IWJ-520

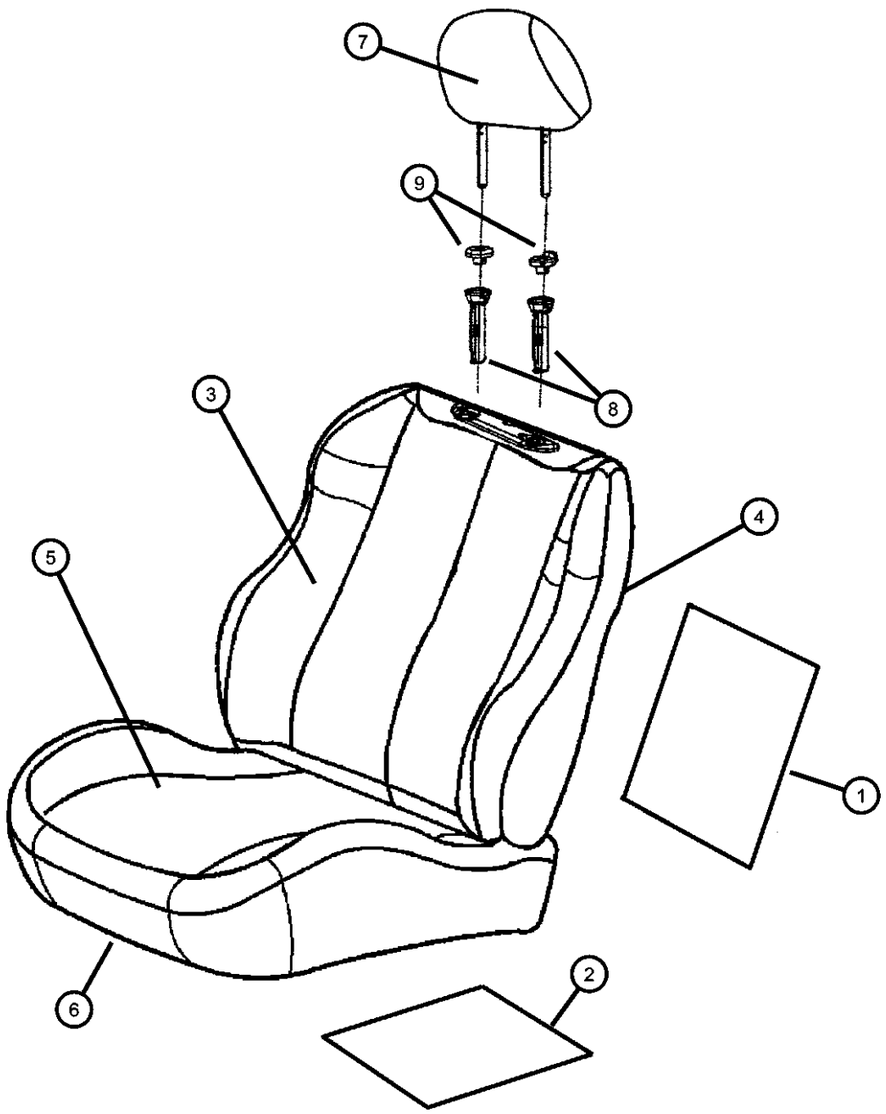

ITEM	PART NUMBER	QTY	LINE	SERIES	BODY	ENGINE	TRANS	TRIM	DESCRIPTION
	0WK461L5AA	1						*JL	[L5], Includes Stick-on Heater Pad, Sales Code [JPX, JTG], Up to 10/4/01, Right
	0WK461T5AA	1						*JL	[T5], Includes Stick-on Heater Pad, Sales Code [JPX, JTG], Up to 10/4/01, Right
	0WK461DVAB	1						*JL	[DV], Includes Stick-on Heater Pad, Sales Code [JPX, JTG], After 10/4/01, Right
	0WK461L5AB	1						*JL	[L5], Includes Stick-on Heater Pad, Sales Code [JPX, JTG], After 10/4/01, Right
	0WK461T5AB	1						*JL	[T5], Includes Stick-on Heater Pad, Sales Code [JPX, JTG], After 10/4/01, Right
	0WK471DVAA	1						*JL	[DV], Includes Stick-on Heater Pad, Sales Code [JPX, JTG], Up to 10/4/01, Left
	0WK471L5AA	1						*JL	[L5], Includes Stick-on Heater Pad, Sales Code [JPX, JTG], Up to 10/4/01, Left
	0WK471T5AA	1						*JL	[T5], Includes Stick-on Heater Pad, Sales Code [JPX, JTG], Up to 10/4/01, Left
	0WK471DVAB	1						*JL	[DV], Includes Stick-on Heater Pad, Sales Code [JPX, JTG], After 10/4/01, Left
	0WK471L5AB	1						*JL	[L5], Heated, Sales Code [JPX, JTG], After 10/4/01, Left
	0WK471T5AB	1						*JL	[T5], Includes Stick-on Heater Pad, Sales Code [JPX, JTG], After 10/4/01, Left
	0WK501DVAA	1						*JL	[DV], Non-Heated, With Sales Code [JP2, JPT], Right
	0WK501L5AA	1						*JL	[L5], Non-Heated, With Sales Code [JP2, JPT], Right
	0WK501T5AA	1						*JL	[T5], Non-Heated, With Sales Code [JP2, JPT], Right
	0WK511DVAA	1						*JL	[DV], Non-Heated, With, Sales Code [JP2, JPT], Left
	0WK511L5AA	1						*JL	[L5], Non-Heated, With Sales Code [JP2, JPT], Left
	0WK511T5AA	1						*JL	[T5], Non-Heated, With Sales Code [JP2, JPT], Left
6									FRAME, Front Seat

GRAND CHEROKEE (WJ)

SERIES	LINE	BODY	ENGINE	TRANSMISSION
H = Laredo M = Sport P = Limited S = Overland	T = JEEP - 2WD J = JEEP - 4WD U = JEEP - 4WD (RHD)	74 = SPORT UTILITY 4-DR	ERH = Engine - 4.0L Power Tech I-6 EVA = Engine- 4.7L V8 MPI EVC = Engine - 4.7L HO V8 MPI ER0 = All 4.0L 6 Cyl. Gas EV0 = All 4.7L Gas	DGK = 4 Speed Auto, 42RE DGQ = 5 Speed Auto, 45RFE DG0 = All Automatic Transmissions

Front Seat, Leather, Trim Code [JL]
Figure IWJ-520

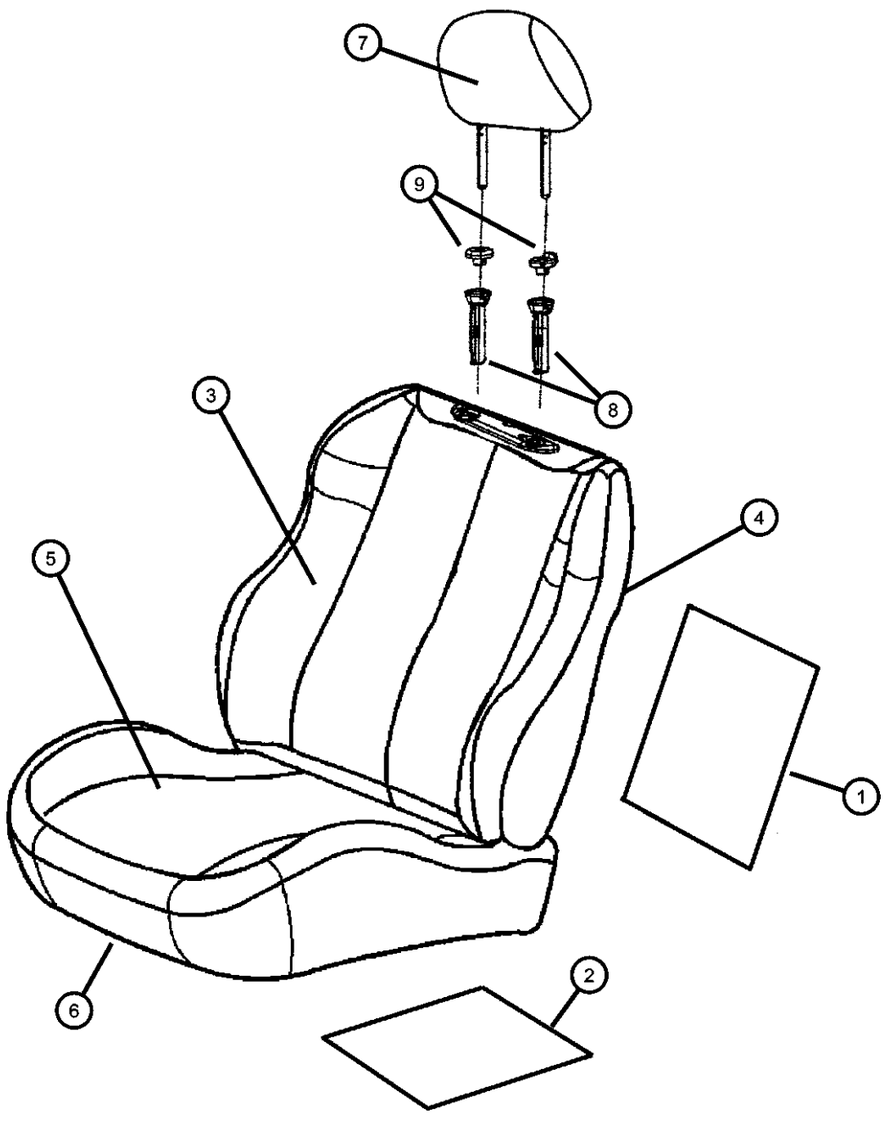

ITEM	PART NUMBER	QTY	LINE	SERIES	BODY	ENGINE	TRANS	TRIM	DESCRIPTION
	04856470	1						*JL	Right
	04856471	1						*JL	Left
7									HEADREST, Front
	0WK271DVAA	2						*JL	[DV]
	0WK271L5AA	2						*JL	[L5]
	0WK271T5AA	2						*JL	[T5]
8	05013152AA	2						*JL	CYLINDER, Headrest
9									COVER, Headrest Sleeve
	0UK041DVAA	1						*JL	[DV], Without Button
	0UK041L5AA	1						*JL	[L5], Without Button
	0UK041T5AA	1						*JL	[T5], Without Button
	0UK051DVAA	1						*JL	[DV], With Button
	0UK051L5AA	1						*JL	[L5], With Button
	0UK051T5AA	1						*JL	[T5], With Button
-10	05018505AA	1							EXTENDER, Seat Belt

GRAND CHEROKEE (WJ)

SERIES	LINE	BODY	ENGINE	TRANSMISSION
H = Laredo M = Sport P = Limited S = Overland	T = JEEP - 2WD J = JEEP - 4WD U = JEEP - 4WD (RHD)	74 = SPORT UTILITY 4-DR	ERH = Engine - 4.0L Power Tech I-6 EVA = Engine- 4.7L V8 MPI EVC = Engine - 4.7L HO V8 MPI ER0 = All 4.0L 6 Cyl. Gas EV0 = All 4.7L Gas	DGK = 4 Speed Auto, 42RE DGQ = 5 Speed Auto, 45RFE DG0 = All Automatic Transmissions

Front Seat, Leather, Trim Code [XL]
Figure IWJ-530

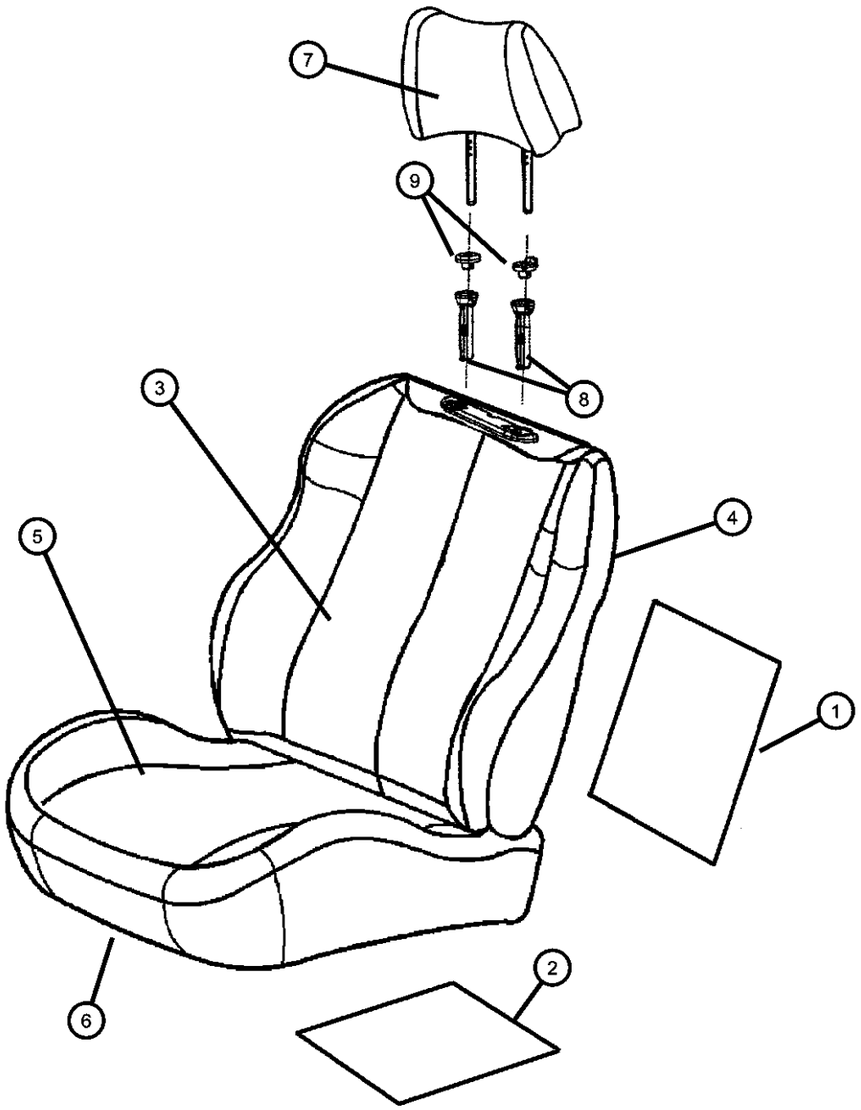

ITEM	PART NUMBER	QTY	LINE	SERIES	BODY	ENGINE	TRANS	TRIM	DESCRIPTION

Sales Codes:
Note; Some early built [JRF, JRH] passenger backs may have Lumbar. Please verify before ordering.
[JRF] = Power 10 Way,Memory Driver, 6 way Passenger Non-Heated.
[JRH] = Power 10 Way,Memory Driver Heated, 6 way Passenger.
[JTC] = Power 10-Way Memory.
[JTF] = Power 10-Way Heated Memory.

1	05072485AA	1						*XL	HEATER, Stick-on Pad, BackSeat Back
2									HEATER, Stick-on Pad, Cushion
	05072486AA	1						*XL	Up to 10/4/01, Cushion
	05072486AB	2						*XL	After 10/4/01, Cushion
3									COVER, Front Seat Back
	0WN521DVAA	2						*XL	[DV]
	0WN521L5AA	2						*XL	[L5]
	0WN521T5AA	2						*XL	[T5]
4									BACK, Front Seat
	0WN481DVAA	1						*XL	[DV], Non-Heated, Sales Code [JTC], Right
	0WN481L5AA	1						*XL	[L5], Non-Heated, Sales Code [JTC], Right
	0WN481T5AA	1						*XL	[T5], Non-Heated, Sales Code [JTC], Right
	0WN491DVAA	1						*XL	[DV], Non-Heated, Sales Code [JTC, JRF], Left
	0WN491L5AA	1						*XL	[L5], Non-Heated, Sales Code [JTC, JRF], Left
	0WN491T5AA	1						*XL	[T5], Non-Heated, Sales Code [JTC, JRF], Left
	0WN501DVAA	1						*XL	[DV], Includes Stick-on Heater Pad, Sales Code [JTF], With Lumbar, Right
	0WN501L5AA	1						*XL	[L5], Includes Stick-on Heater Pad, Sales Code [JTF], With Lumbar, Right
	0WN501T5AA	1						*XL	[T5], Includes Stick-on Heater Pad, Sales Code [JTF], With Lumbar, Right
	0WN511DVAA	1						*XL	[DV], Includes Stick-on Heater Pad, Sales Code [JTF, JRH], Left
	0WN511L5AA	1						*XL	[L5], Includes Stick-on Heater Pad, Sales Code [JTF, JRH], Left
	0WN511T5AA	1						*XL	[T5], Includes Stick-on Heater Pad, Sales Code [JTF, JRH], Left

GRAND CHEROKEE (WJ)

SERIES	LINE	BODY	ENGINE	TRANSMISSION
H = Laredo	T = JEEP - 2WD	74 = SPORT UTILITY 4-DR	ERH = Engine - 4.0L Power Tech I-6	DGK = 4 Speed Auto, 42RE
M = Sport	J = JEEP - 4WD		EVA = Engine- 4.7L V8 MPI	DGQ = 5 Speed Auto, 45RFE
P = Limited	U = JEEP - 4WD (RHD)		EVC = Engine - 4.7L HO V8 MPI	DG0 = All Automatic Transmissions
S = Overland			ER0 = All 4.0L 6 Cyl. Gas	
			EV0 = All 4.7L Gas	

Front Seat, Leather, Trim Code [XL]
Figure IWJ-530

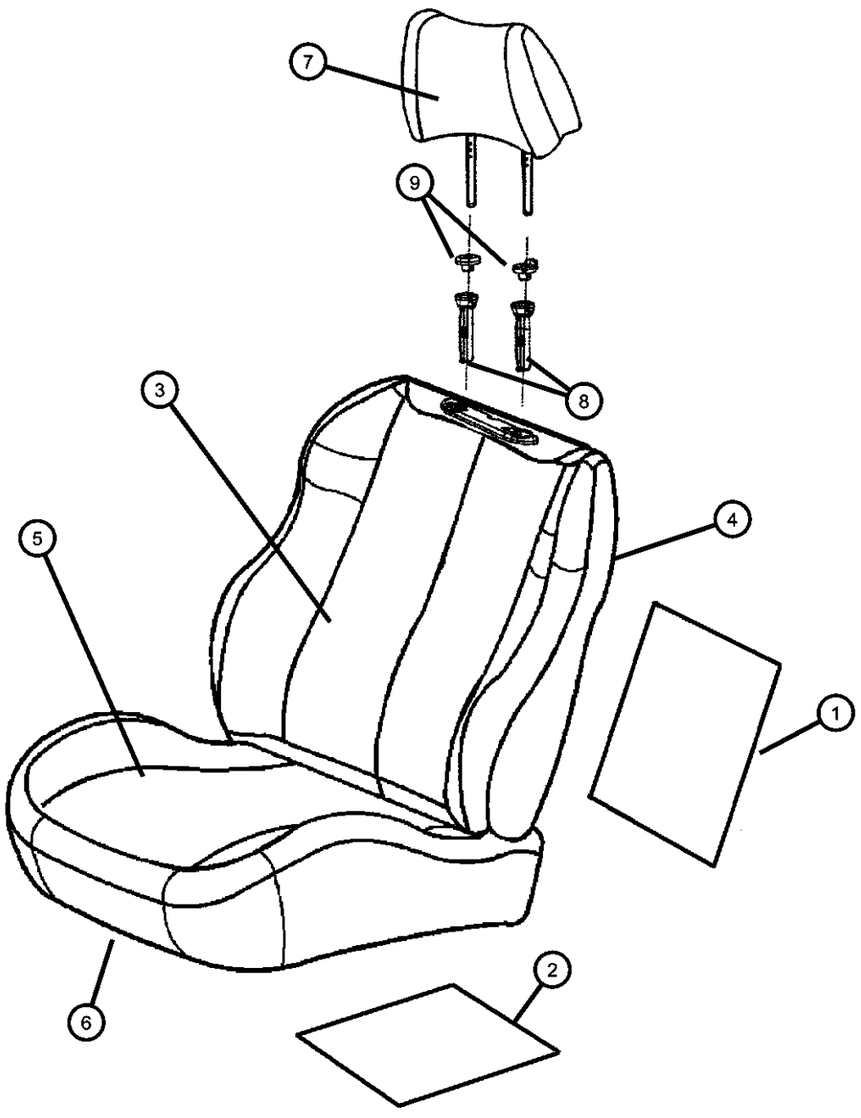

ITEM	PART NUMBER	QTY	LINE	SERIES	BODY	ENGINE	TRANS	TRIM	DESCRIPTION
	0XC101DVAA	1						*XL	[DV], Includes Stick-on Heater Pad, Sales Code [JTF, JRH], Without Lumbar, Right
	0XC101L5AA	1						*XL	[L5], Includes Stick-on Heater Pad, Sales Code [JTF, JRH], Without Lumbar, Right
	0XC101T5AA	1						*XL	[T5], Includes Stick-on Heater Pad, Sales Code [JTF, JRH], Without Lumbar, Right
	0XC501DVAA	1						*XL	[DV], Non-Heated, Sales Code [JRF], Right
	0XC501L5AA	1						*XL	[L5], Non-Heated, Sales Code [JRF], Right
	0XC501T5AA	1						*XL	[T5], Non-Heated, Sales Code [JRF], Right
5									COVER AND PAD, Cushion
	0WN441DVAA	1						*XL	[DV], Non-Heated, Sales Code [JTC], Right
	0WN441T5AA	1						*XL	[T5], Non-Heated, Sales Code [JTC], Right
		1						*XL	[L5], Non-Heated, Sales Code [JTC], Right
	0WN451DVAA	1						*XL	[DV], Non-Heated, Sales Code [JTC], Left
	0WN451L5AA	1						*XL	[L5], Non-Heated, Sales Code [JTC], Left
	0WN451T5AA	1						*XL	[T5], Non-Heated, Sales Code [JTC], Left
	0WN461DVAA	1						*XL	[DV], Includes Stick-on Heater Pad, Sales Code [JTF], Up to 10/4/01, Right
	0WN461L5AA	1						*XL	[L5], Includes Stick-on Heater Pad, Sales Code [JTF], Up to 10/4/01, Right
	0WN461T5AA	1						*XL	[T5], Includes Stick-on Heater Pad, Sales Code [JTF], Up to 10/4/01, Right
	0WN461DVAB	1						*XL	[DV], Includes Stick-on Heater Pad, Sales Code [JTF], After 10/4/01, Right
	0WN461L5AB	1						*XL	[L5], Includes Stick-on Heater Pad, Sales Code [JTF], After 10/4/01, Right
	0WN461T5AB	1						*XL	[T5], Includes Stick-on Heater Pad, Sales Code [JTF], After 10/4/01, Right

GRAND CHEROKEE (WJ)

SERIES	LINE	BODY	ENGINE	TRANSMISSION
H = Laredo M = Sport P = Limited S = Overland	T = JEEP - 2WD J = JEEP - 4WD U = JEEP - 4WD (RHD)	74 = SPORT UTILITY 4-DR	ERH = Engine - 4.0L Power Tech I-6 EVA = Engine- 4.7L V8 MPI EVC = Engine - 4.7L HO V8 MPI ER0 = All 4.0L 6 Cyl. Gas EV0 = All 4.7L Gas	DGK = 4 Speed Auto, 42RE DGQ = 5 Speed Auto, 45RFE DG0 = All Automatic Transmissions

Front Seat, Leather, Trim Code [XL]
Figure IWJ-530

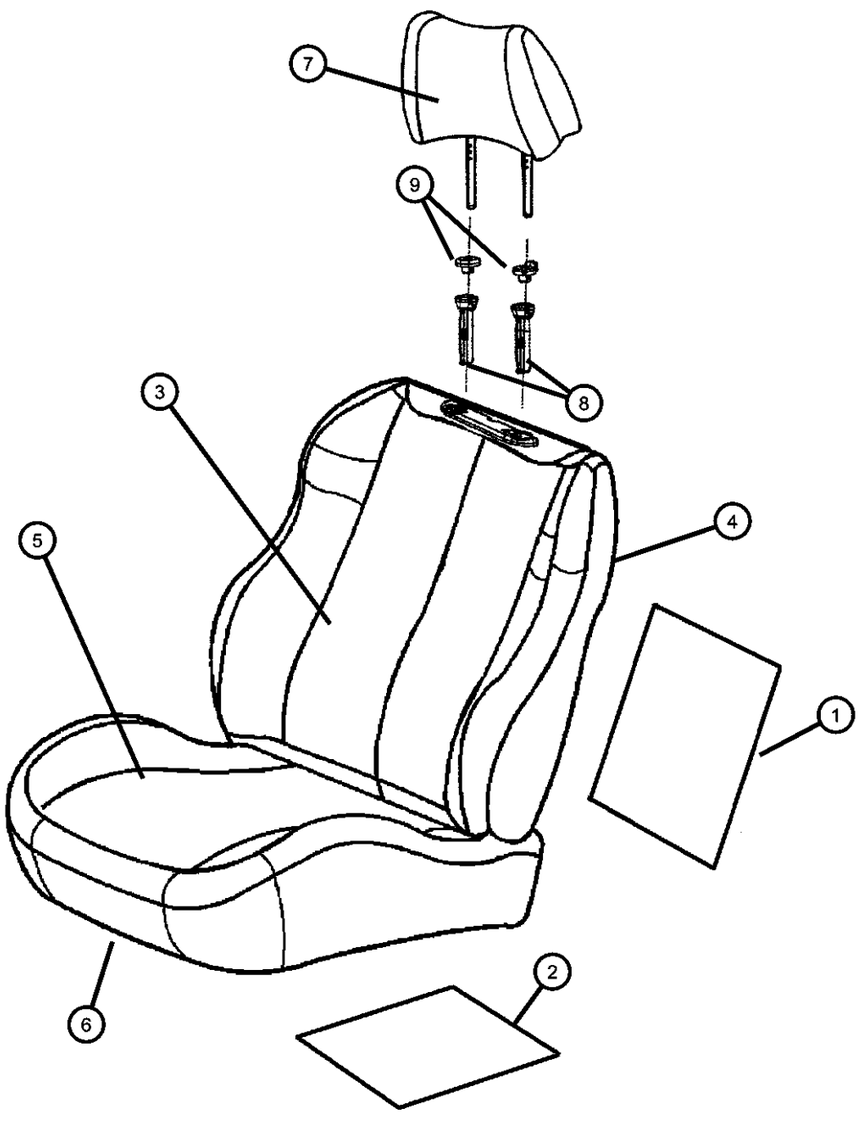

ITEM	PART NUMBER	QTY	LINE	SERIES	BODY	ENGINE	TRANS	TRIM	DESCRIPTION
	0WN471DVAA	1						*XL	[DV], Includes Stick-on Heater Pad, Sales Code [JTF], Up to 10/4/01, Left
	0WN471L5AA	1						*XL	[L5], Includes Stick-on Heater Pad, Sales Code [JTF], Up to 10/4/01, Left
	0WN471T5AA	1						*XL	[T5], Includes Stick-on Heater Pad, Sales Code [JTF], Up to 10/4/01, Left
	0WN471DVAB	1						*XL	[DV], Includes Stick-on Heater Pad, Sales Code [JTF], After 10/4/01, Left
	0WN471L5AB	1						*XL	[L5], Includes Stick-on Heater Pad, Sales Code [JTF], After 10/4/01, Left
	0WN471T5AB	1						*XL	[T5], Includes Stick-on Heater Pad, Sales Code [JTF], After 10/4/01, Left
6									FRAME, Front Seat
	04856470	1						*XL	Right
	04856471	1						*XL	Left
7									HEADREST, Front
	0UK071DVAA	2						*XL	[DV]
	0UK071L5AA	2						*XL	[L5]
	0UK071T5AA	2						*XL	[T5]
8	05013152AA	2						*XL	CYLINDER, Headrest
9									COVER, Headrest Sleeve
	0UK041DVAA	1						*XL	[DV], Without Button, Right
	0UK041L5AA	1						*XL	[L5], Without Button, Right
	0UK041T5AA	1						*XL	[T5], Without Button, Right
	0UK051DVAA	1						*XL	[DV], With Button, Left
	0UK051L5AA	1						*XL	[L5], With Button, Left
	0UK051T5AA	1						*XL	[T5], With Button, Left
-10	05018505AA	1							EXTENDER, Seat Belt

GRAND CHEROKEE (WJ)

SERIES	LINE	BODY	ENGINE	TRANSMISSION
H = Laredo M = Sport P = Limited S = Overland	T = JEEP - 2WD J = JEEP - 4WD U = JEEP - 4WD (RHD)	74 = SPORT UTILITY 4-DR	ERH = Engine - 4.0L Power Tech I-6 EVA = Engine- 4.7L V8 MPI EVC = Engine - 4.7L HO V8 MPI ER0 = All 4.0L 6 Cyl. Gas EV0 = All 4.7L Gas	DGK = 4 Speed Auto, 42RE DGQ = 5 Speed Auto, 45RFE DG0 = All Automatic Transmissions

Front Seat, Leather, Trim Code [NL]
Figure IWJ-540

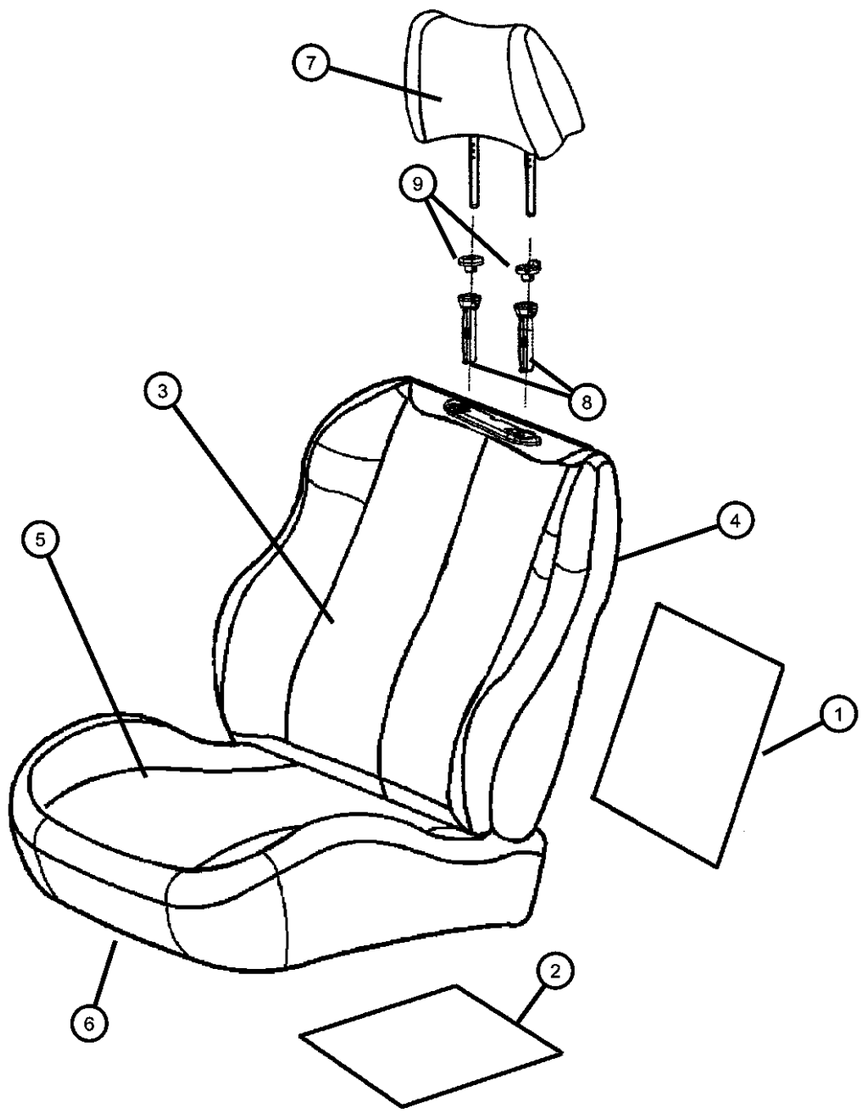

ITEM	PART NUMBER	QTY	LINE	SERIES	BODY	ENGINE	TRANS	TRIM	DESCRIPTION
Sales Codes:									
[JTF] = Power 10-Way Heated Memory.									
1	05072485AA	1						*NL	HEATER, Stick-on Pad, BackSeat Back
2									HEATER, Stick-on Pad, Cushion
	05072486AA	1						*NL	Up to 10/4/01, Cushion
	05072486AB	2						*NL	After 10/4/01,
3	0WK371DBAA	2						*NL	COVER, Front Seat Back
4									BACK, Front Seat
	0WK561DBAA	1						*NL	Includes Stick-on Heater Pad, Right
	0WK571DBAA	1						*NL	Includes Stick-on Heater Pad, Left
5									COVER AND PAD, Cushion
	0WK541DBAA	1						*NL	Side Facing Dark Slate, Includes Stick-on Heater Pad, Up to 10/4/01, Right
	0WK551DBAA	1						*NL	Side Facing Dark Slate, Includes Stick-on Heater Pad, Up to 10/4/01, Left
	0XE661DBAA	1						*NL	Side Facing Light Slate, Includes Stick-on Heater Pad, After 10/4/01, Right
	0XE671DBAA	1						*NL	Side Facing Light Slate, Includes Stick-on Heater Pad, After 10/4/01, Left
6									FRAME, Front Seat
	04856470	1						*NL	Right
	04856471	1						*NL	Left
7	0WK431DBAA	2						*NL	HEADREST, Front
8	05013152AA	2						*XL	CYLINDER, Headrest
9									COVER, Headrest Sleeve
	0UK041DBAA	1						*NL	Without Button
	0UK051DBAA	1						*NL	With Button
-10	05018505AA	1							EXTENDER, Seat Belt

GRAND CHEROKEE (WJ)

SERIES	LINE	BODY	ENGINE	TRANSMISSION
H = Laredo M = Sport P = Limited S = Overland	T = JEEP - 2WD J = JEEP - 4WD U = JEEP - 4WD (RHD)	74 = SPORT UTILITY 4-DR	ERH = Engine - 4.0L Power Tech I-6 EVA = Engine- 4.7L V8 MPI EVC = Engine - 4.7L HO V8 MPI ER0 = All 4.0L 6 Cyl. Gas EV0 = All 4.7L Gas	DGK = 4 Speed Auto, 42RE DGQ = 5 Speed Auto, 45RFE DG0 = All Automatic Transmissions

AR = use ase required - = Non illustrrated part

Rear Seat, Trim Code [E7]
Figure IWJ-610

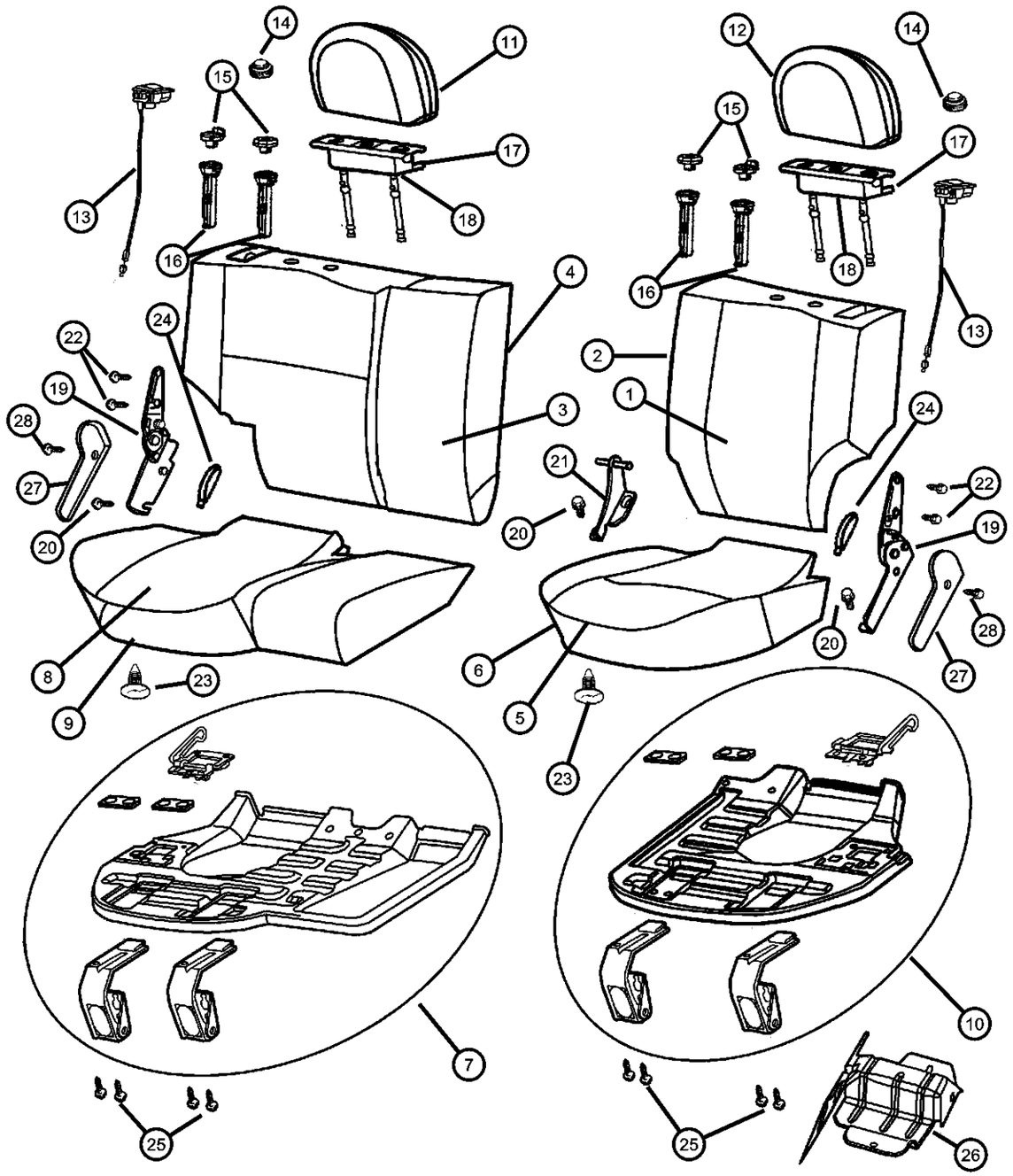

ITEM	PART NUMBER	QTY	LINE	SERIES	BODY	ENGINE	TRANS	TRIM	DESCRIPTION
1									COVER, Rear Seat Back, 40%
	0WK231DVAA	1						*E7	[DV]
	0WK231L5AA	1						*E7	[L5]
	0WK231T5AA	1						*E7	[T5]
2									SEAT BACK, Rear, 40%
	0WK211DVAA	1						*E7	[DV]
	0WK211L5AA	1						*E7	[L5]
	0WK211T5AA	1						*E7	[T5]
3									COVER, Rear Seat Back, 60%
	0WK221DVAA	1						*E7	[DV]
	0WK221L5AA	1						*E7	[L5]
	0WK221T5AA	1						*E7	[T5]
4									SEAT BACK, Rear, 60%
	0WK201DVAA	1						*E7	[DV]
	0WK201L5AA	1						*E7	[L5]
	0WK201T5AA	1						*E7	[T5]
5									COVER, Rear Seat Cushion, 40%
	0WK191DVAA	1						*E7	[DV]
	0WK191L5AA	1						*E7	[L5]
	0WK191T5AA	1						*E7	[T5]
6									CUSHION, Rear Seat, 40%
	0WK171DVAA	1						*E7	[DV]
	0WK171L5AA	1						*E7	[L5]
	0WK171T5AA	1						*E7	[T5]
7	05013119AA	1						*E7	PANEL, Seat Cushion Base, 60%
8									COVER, Rear Seat Cushion, 60%
	0WK181DVAA	1						*E7	[DV]
	0WK181L5AA	1						*E7	[L5]
	0WK181T5AA	1						*E7	[T5]
9									CUSHION, Rear Seat, 60%
	0WK161DVAA	1						*E7	[DV]
	0WK161L5AA	1						*E7	[L5]
	0WK161T5AA	1						*E7	[T5]

GRAND CHEROKEE (WJ)

SERIES	LINE	BODY	ENGINE	TRANSMISSION
H = Laredo M = Sport P = Limited S = Overland	T = JEEP - 2WD J = JEEP - 4WD U = JEEP - 4WD (RHD)	74 = SPORT UTILITY 4-DR	ERH = Engine - 4.0L Power Tech I-6 EVA = Engine- 4.7L V8 MPI EVC = Engine - 4.7L HO V8 MPI ER0 = All 4.0L 6 Cyl. Gas EV0 = All 4.7L Gas	DGK = 4 Speed Auto, 42RE DGQ = 5 Speed Auto, 45RFE DG0 = All Automatic Transmissions

AR = use ase required - = Non illustrrated part

<< RETURN TO GROUP INDEX

Rear Seat, Trim Code [E7]
Figure IWJ-610

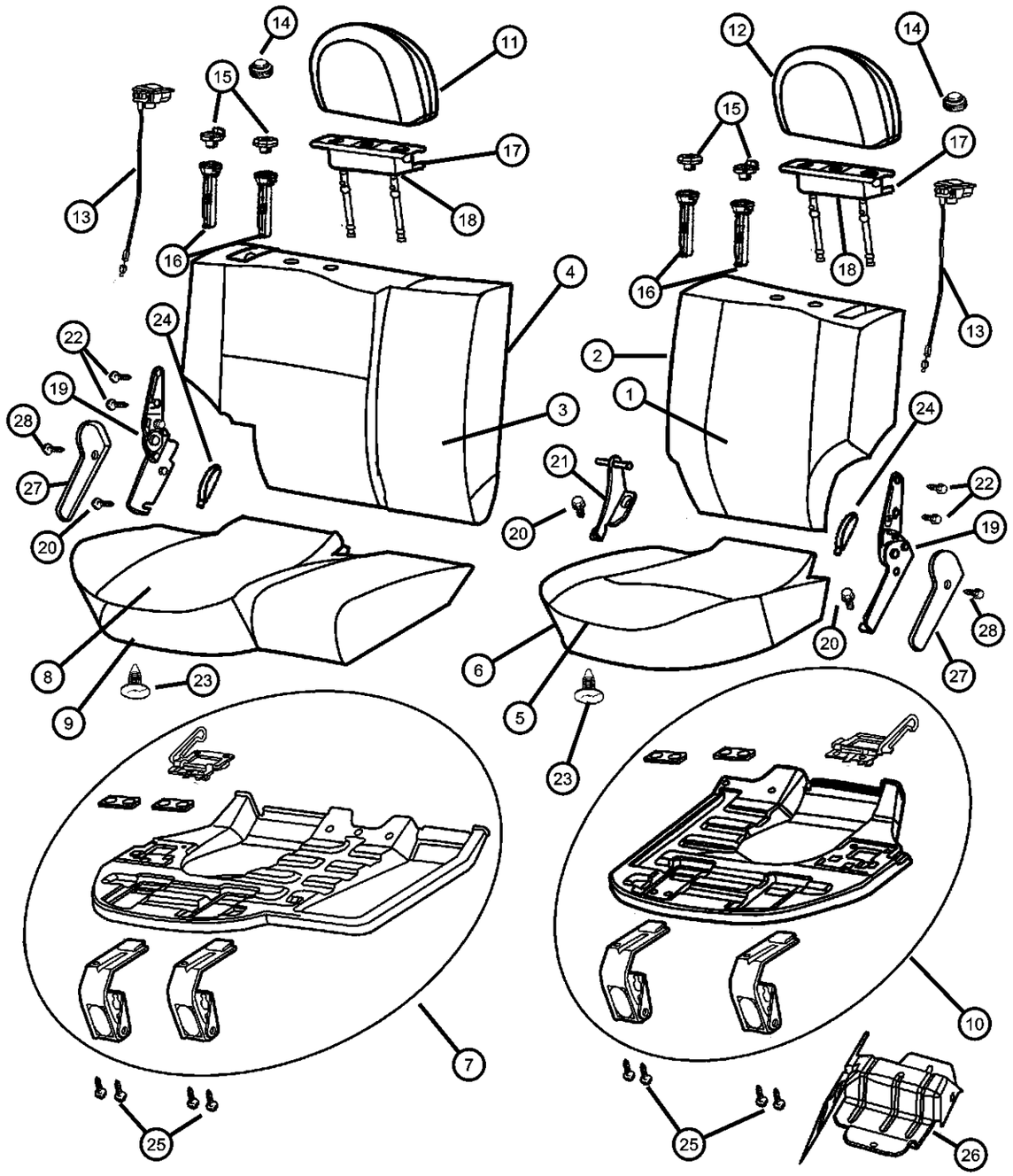

ITEM	PART NUMBER	QTY	LINE	SERIES	BODY	ENGINE	TRANS	TRIM	DESCRIPTION
10	05013118AA	1						*E7	PANEL, Seat Cushion Base, 40%
11									HEADREST, Rear, Right
	0WK281DVAA	1						*E7	[DV]
	0WK281L5AA	1						*E7	[L5]
	0WK281T5AA	1						*E7	[T5]
12									HEADREST, Rear, Left
	0WK291DVAA	1						*E7	[DV]
	0WK291L5AA	1						*E7	[L5]
	0WK291T5AA	1						*E7	[T5]
13									CONTROL, SEAT RELEASE
	0SX641DVAA	1						*E7	[DV]
	0SX641L5AA	1						*E7	[L5]
	0SX641T5AA	1						*E7	[T5]
14									HANDLE, Headrest
	05013168AA	1						*E7	Right
	05013169AA	1						*E7	Left
15									COVER, Headrest Sleeve
	0UK041DVAA	1						*E7	[DV], Without Button
	0UK041L5AA	1						*E7	[L5], Without Button
	0UK041T5AA	1						*E7	[T5], Without Button
	0UK051DVAA	1						*E7	[DV], With Button
	0UK051L5AA	1						*E7	[L5], With Button
	0UK051T5AA	1						*E7	[T5], With Button
16	05013152AA	2						*E7	CYLINDER, Headrest
17									BRACKET AND HINGE, Headrest
	05016178AA	1						*E7	Right
	05016179AA	1						*E7	Left
18									SHIELD, Headrest
	05016920AA	1						*E7	Right
	05016921AA	1						*E7	Left
19									LATCH, Seat
	05080270AA	1						*E7	Right
	05080271AA	1						*E7	Left

GRAND CHEROKEE (WJ)

SERIES	LINE	BODY	ENGINE	TRANSMISSION
H = Laredo M = Sport P = Limited S = Overland	T = JEEP - 2WD J = JEEP - 4WD U = JEEP - 4WD (RHD)	74 = SPORT UTILITY 4-DR	ERH = Engine - 4.0L Power Tech I-6 EVA = Engine- 4.7L V8 MPI EVC = Engine - 4.7L HO V8 MPI ER0 = All 4.0L 6 Cyl. Gas EV0 = All 4.7L Gas	DGK = 4 Speed Auto, 42RE DGQ = 5 Speed Auto, 45RFE DG0 = All Automatic Transmissions

AR = use ase required - = Non illustrrated part

<< RETURN TO GROUP INDEX

Rear Seat, Trim Code [E7]
Figure IWJ-610

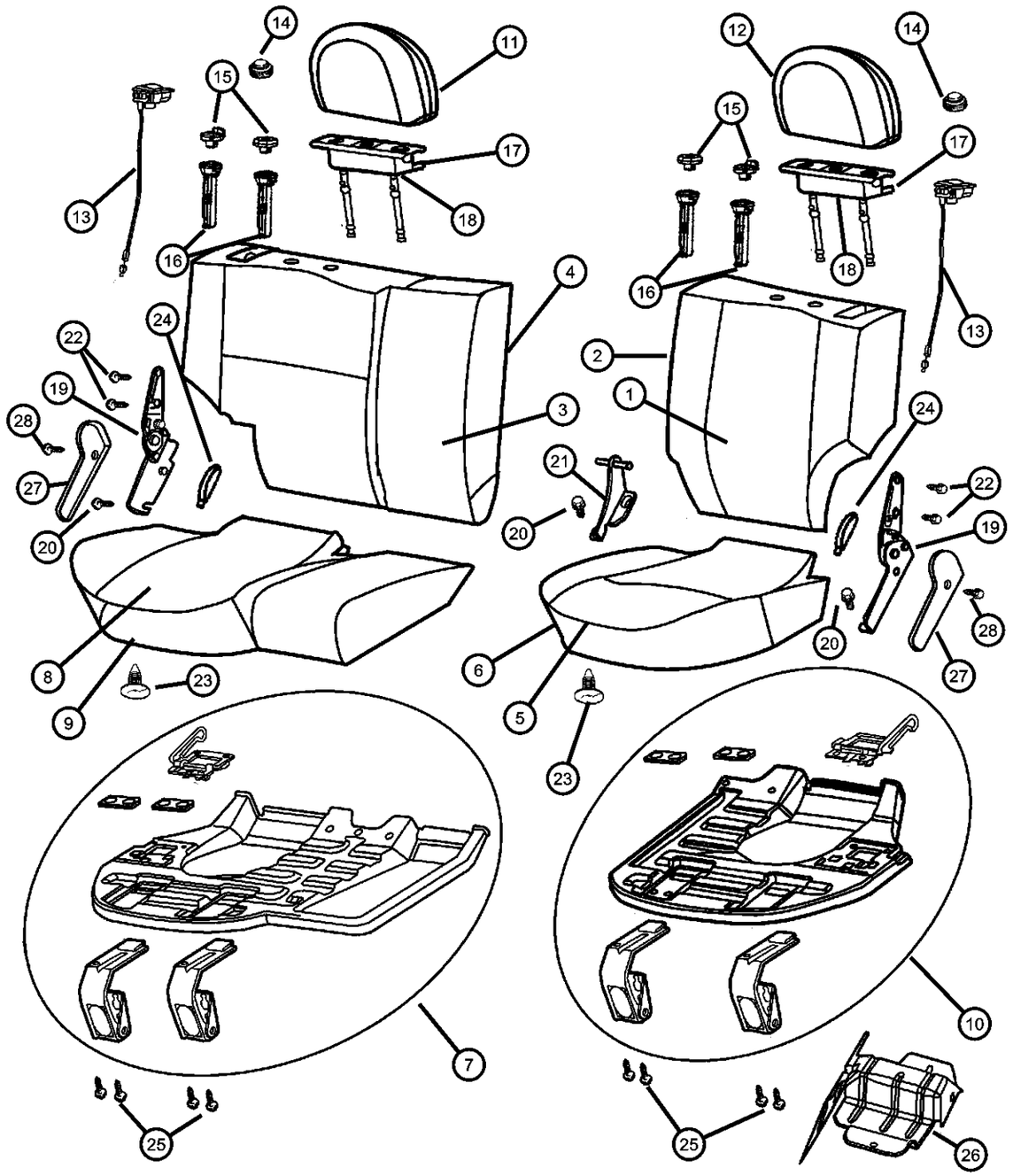

ITEM	PART NUMBER	QTY	LINE	SERIES	BODY	ENGINE	TRANS	TRIM	DESCRIPTION
20	06507385AA	4							SCREW AND WASHER, Hex Head
21	05080268AA	1						*E7	BRACKET, Pivot
22	04720768	4						*E7	BOLT, Recliner to Seat Back
23	05019522AA	2						*E7	RETAINER, Cushion Cover
24									STRAP, Seat Pull
	0SL001DVAA	1						*E7	[DV]
	0SL001L5AA	1						*E7	[L5]
	0SL001T5AA	1						*E7	[T5]
25	06100558	8							BOLT AND CONED WASHER, Hex Head, M6x25x14
26									BRACKET, Seat
	55196740AB	1							Rear Seat Cushion Latch, Right
	55196741AD	1							Rear Seat Cushion Latch, Left
27									COVER, Seat latch
	0UN701DVAA	1						*E7	[DV], Right
	0UN701L5AA	1						*E7	[L5], Right
	0UN701T5AA	1						*E7	[T5], Right
	0UN711DVAA	1						*E7	[DV], Left
	0UN711L5AA	1						*E7	[L5], Left
	0UN711T5AA	1						*E7	[T5], Left
28	05072471AA	2						*E7	RIVET

GRAND CHEROKEE (WJ)

SERIES	LINE	BODY	ENGINE	TRANSMISSION
H = Laredo M = Sport P = Limited S = Overland	T = JEEP - 2WD J = JEEP - 4WD U = JEEP - 4WD (RHD)	74 = SPORT UTILITY 4-DR	ERH = Engine - 4.0L Power Tech I-6 EVA = Engine- 4.7L V8 MPI EVC = Engine - 4.7L HO V8 MPI ER0 = All 4.0L 6 Cyl. Gas EV0 = All 4.7L Gas	DGK = 4 Speed Auto, 42RE DGQ = 5 Speed Auto, 45RFE DG0 = All Automatic Transmissions

AR = use ase required - = Non illustrrated part

Rear Seat, Trim Code [JL]
Figure IWJ-620

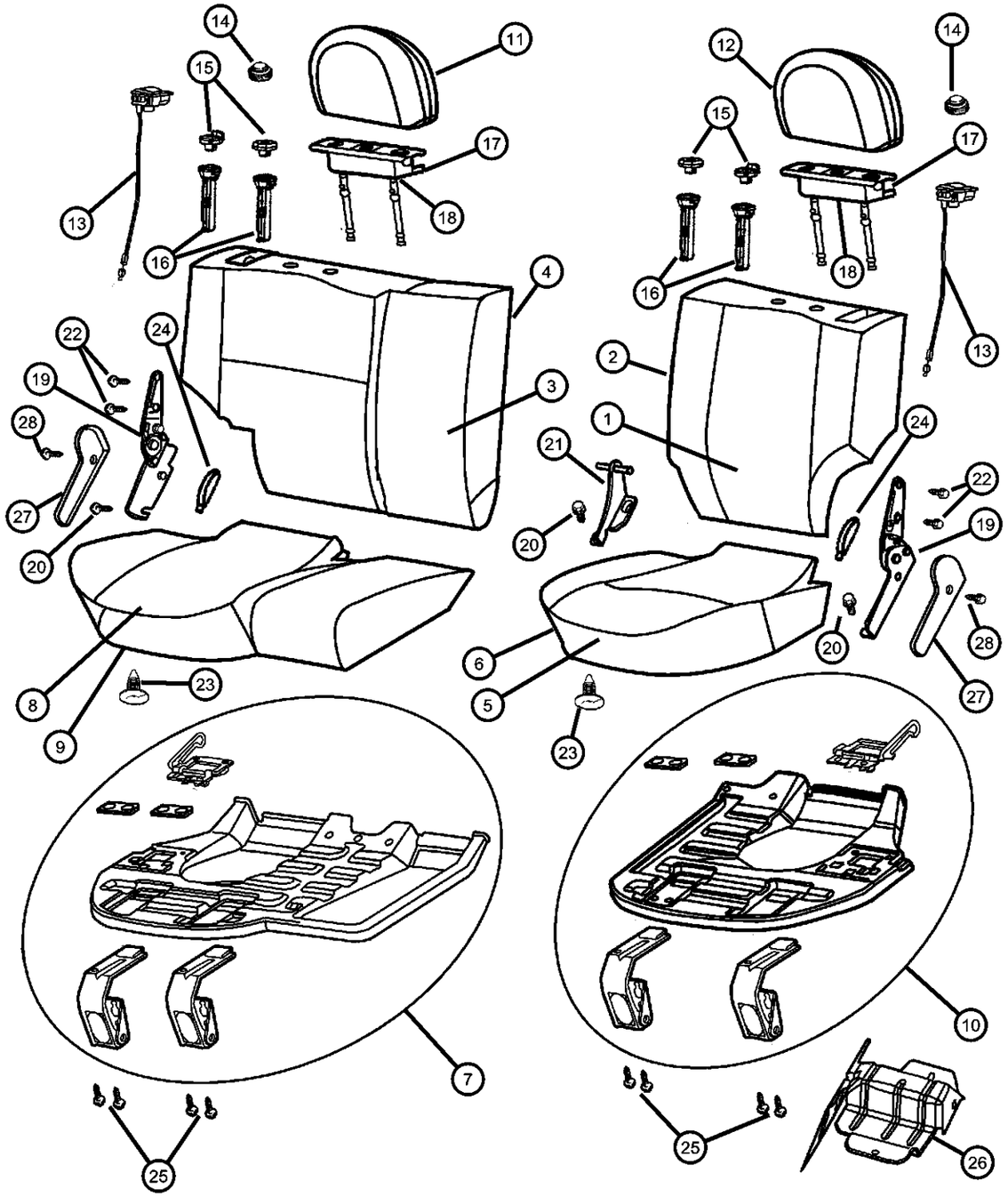

ITEM	PART NUMBER	QTY	LINE	SERIES	BODY	ENGINE	TRANS	TRIM	DESCRIPTION
1									COVER, Rear Seat Back, 40%
	0WK391DVAA	1						*JL	[DV]
	0WK391L5AA	1						*JL	[L5]
	0WK391T5AA	1						*JL	[T5]
2									SEAT BACK, Rear, 40%
	0WK411DVAA	1						*JL	[DV]
	0WK411L5AA	1						*JL	[L5]
	0WK411T5AA	1						*JL	[T5]
3									COVER, Rear Seat Back, 60%
	0WK381DVAA	1						*JL	[DV]
	0WK381L5AA	1						*JL	[L5]
	0WK381T5AA	1						*JL	[T5]
4									SEAT BACK, Rear, 60%
	0WK401DVAA	1						*JL	[DV]
	0WK401L5AA	1						*JL	[L5]
	0WK401T5AA	1						*JL	[T5]
5									COVER, Rear Seat Cushion, 40%
	0WK331DVAA	1						*JL	[DV]
	0WK331L5AA	1						*JL	[L5]
	0WK331T5AA	1						*JL	[T5]
6									CUSHION, Rear Seat, 40%
	0WK351DVAA	1						*JL	[DV]
	0WK351L5AA	1						*JL	[L5]
	0WK351T5AA	1						*JL	[T5]
7	05013119AA	1						*E7	PANEL, Seat Cushion Base, 60%
8									COVER, Rear Seat Cushion, 60%
	0WK321DVAA	1						*JL	[DV]
	0WK321L5AA	1						*JL	[L5]
	0WK321T5AA	1						*JL	[T5]
9									CUSHION, Rear Seat, 60%
	0WK341DVAA	1						*JL	[DV]
	0WK341L5AA	1						*JL	[L5]
	0WK341T5AA	1						*JL	[T5]

GRAND CHEROKEE (WJ)

SERIES	LINE	BODY	ENGINE	TRANSMISSION
H = Laredo M = Sport P = Limited S = Overland	T = JEEP - 2WD J = JEEP - 4WD U = JEEP - 4WD (RHD)	74 = SPORT UTILITY 4-DR	ERH = Engine - 4.0L Power Tech I-6 EVA = Engine- 4.7L V8 MPI EVC = Engine - 4.7L HO V8 MPI ER0 = All 4.0L 6 Cyl. Gas EV0 = All 4.7L Gas	DGK = 4 Speed Auto, 42RE DGQ = 5 Speed Auto, 45RFE DG0 = All Automatic Transmissions

AR = use ase required - = Non illustrrated part

Rear Seat, Trim Code [JL]
Figure IWJ-620

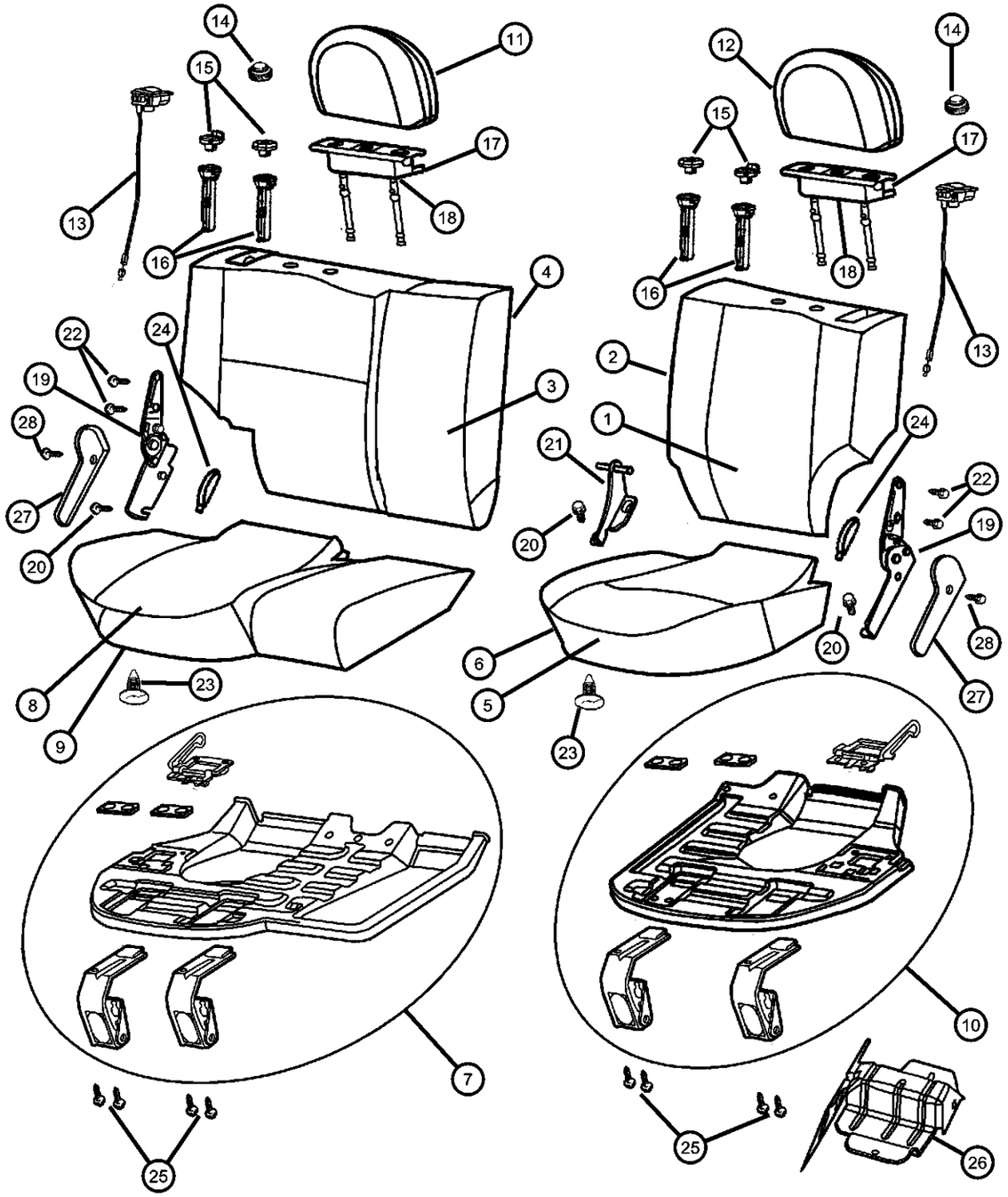

ITEM	PART NUMBER	QTY	LINE	SERIES	BODY	ENGINE	TRANS	TRIM	DESCRIPTION
10	05013118AA	1						*JL	PANEL, Seat Cushion Base, 40%
11									HEADREST, Rear, Right
	0WK301DVAA	1						*JL	[DV]
	0WK301L5AA	1						*JL	[L5]
	0WK301T5AA	1						*JL	[T5]
12									HEADREST, Rear, Left
	0WK311DVAA	1						*JL	[DV]
	0WK311L5AA	1						*JL	[L5]
	0WK311T5AA	1						*JL	[T5]
13									CONTROL, SEAT RELEASE
	0SX641DVAA	1						*JL	[DV]
	0SX641L5AA	1						*JL	[L5]
	0SX641T5AA	1						*JL	[T5]
14									HANDLE, Headrest
	05013168AA	1						*JL	Right
	05013169AA	1						*JL	Left
15									COVER, Headrest Sleeve
	0UK041DVAA	1						*JL	[DV], Without Button
	0UK041L5AA	1						*JL	[L5], Without Button
	0UK041T5AA	1						*JL	[T5], Without Button
	0UK051DVAA	1						*JL	[DV], With Button
	0UK051L5AA	1						*JL	[L5], With Button
	0UK051T5AA	1						*JL	[T5], With Button
16	05013152AA	2						*JL	CYLINDER, Headrest
17									BRACKET AND HINGE, Headrest
	05016178AA	1						*JL	Right
	05016179AA	1						*JL	Left
18									SHIELD, Headrest
	05016920AA	1						*JL	Right
	05016921AA	1						*JL	Left
19									LATCH, Seat
	05080270AA	1						*JL	Right
	05080271AA	1						*JL	Left

GRAND CHEROKEE (WJ)

SERIES	LINE	BODY	ENGINE	TRANSMISSION
H = Laredo M = Sport P = Limited S = Overland	T = JEEP - 2WD J = JEEP - 4WD U = JEEP - 4WD (RHD)	74 = SPORT UTILITY 4-DR	ERH = Engine - 4.0L Power Tech I-6 EVA = Engine- 4.7L V8 MPI EVC = Engine - 4.7L HO V8 MPI ER0 = All 4.0L 6 Cyl. Gas EV0 = All 4.7L Gas	DGK = 4 Speed Auto, 42RE DGQ = 5 Speed Auto, 45RFE DG0 = All Automatic Transmissions

AR = use ase required - = Non illustrrated part

<< RETURN TO GROUP INDEX

Rear Seat, Trim Code [JL]
Figure IWJ-620

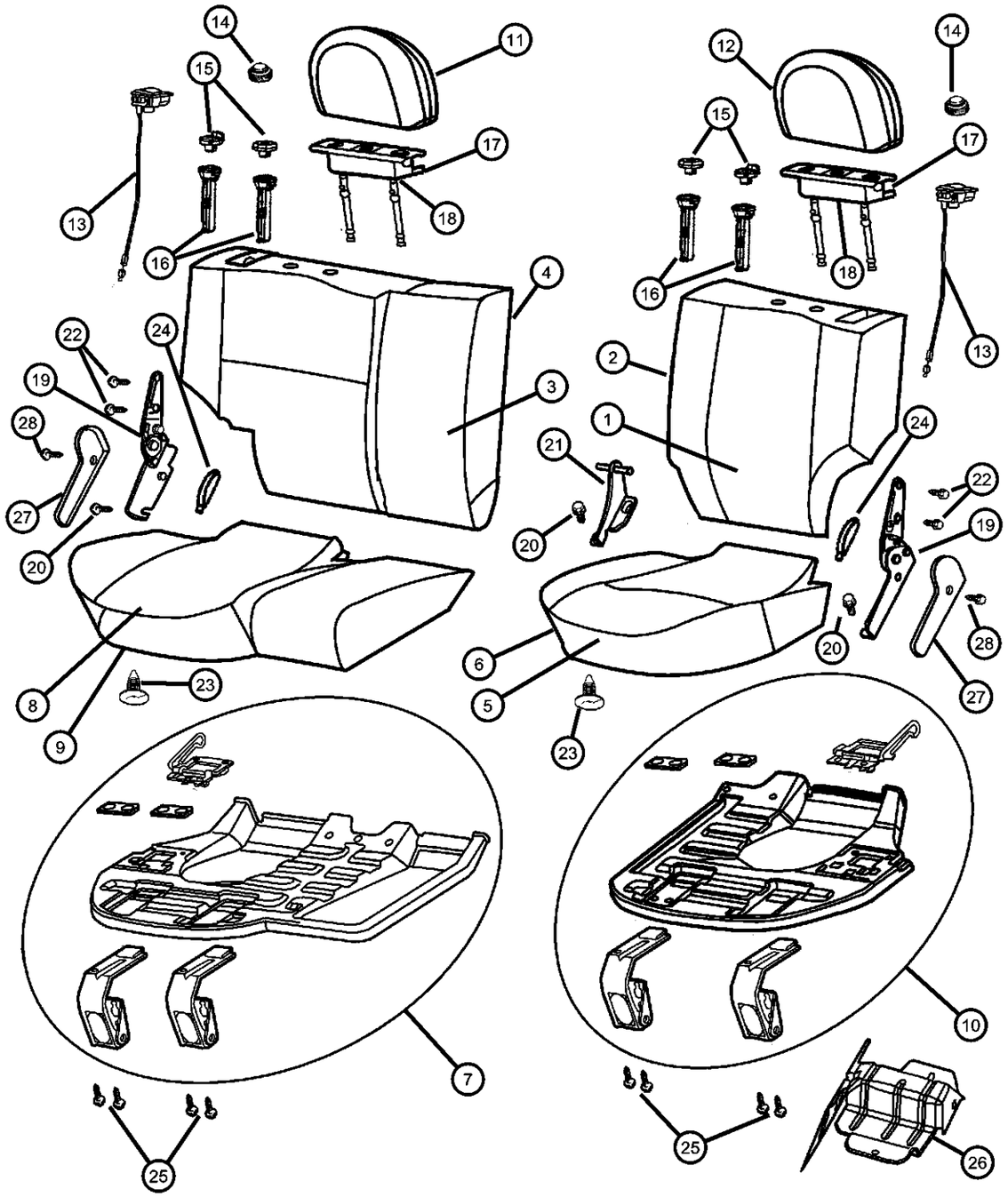

ITEM	PART NUMBER	QTY	LINE	SERIES	BODY	ENGINE	TRANS	TRIM	DESCRIPTION
20	06507385AA	4							SCREW AND WASHER, Hex Head
21	05080268AA	1						*JL	BRACKET, Pivot
22	04720768	4						*JL	BOLT, Recliner to Seat Back
23	05019522AA	2						*JL	RETAINER, Cushion Cover
24									STRAP, Seat Pull
	0SL001DVAA	1						*JL	[DV]
	0SL001L5AA	1						*JL	[L5]
	0SL001T5AA	1						*JL	[T5]
25	06100558	8							BOLT AND CONED WASHER, Hex Head, M6x25x14
26									BRACKET, Seat
	55196740AB	1							Rear Seat Cushion Latch, Right
	55196741AD	1							Rear Seat Cushion Latch, Left
27									COVER, Seat latch
	0UN701DVAA	1						*JL	[DV], Right
	0UN701L5AA	1						*JL	[L5], Right
	0UN701T5AA	1						*JL	[T5], Right
	0UN711DVAA	1						*JL	[DV], Left
	0UN711L5AA	1						*JL	[L5], Left
	0UN711T5AA	1						*JL	[T5], Left
28	05072471AA	2						*JL	RIVET

GRAND CHEROKEE (WJ)

SERIES	LINE	BODY	ENGINE	TRANSMISSION
H = Laredo	T = JEEP - 2WD	74 = SPORT UTILITY 4-DR	ERH = Engine - 4.0L Power Tech I-6	DGK = 4 Speed Auto, 42RE
M = Sport	J = JEEP - 4WD		EVA = Engine- 4.7L V8 MPI	DGQ = 5 Speed Auto, 45RFE
P = Limited	U = JEEP - 4WD (RHD)		EVC = Engine - 4.7L HO V8 MPI	DG0 = All Automatic Transmissions
S = Overland			ER0 = All 4.0L 6 Cyl. Gas	
			EV0 = All 4.7L Gas	

AR = use ase required - = Non illustrrated part

Rear Seat, Trim Code [XL]
Figure IWJ-630

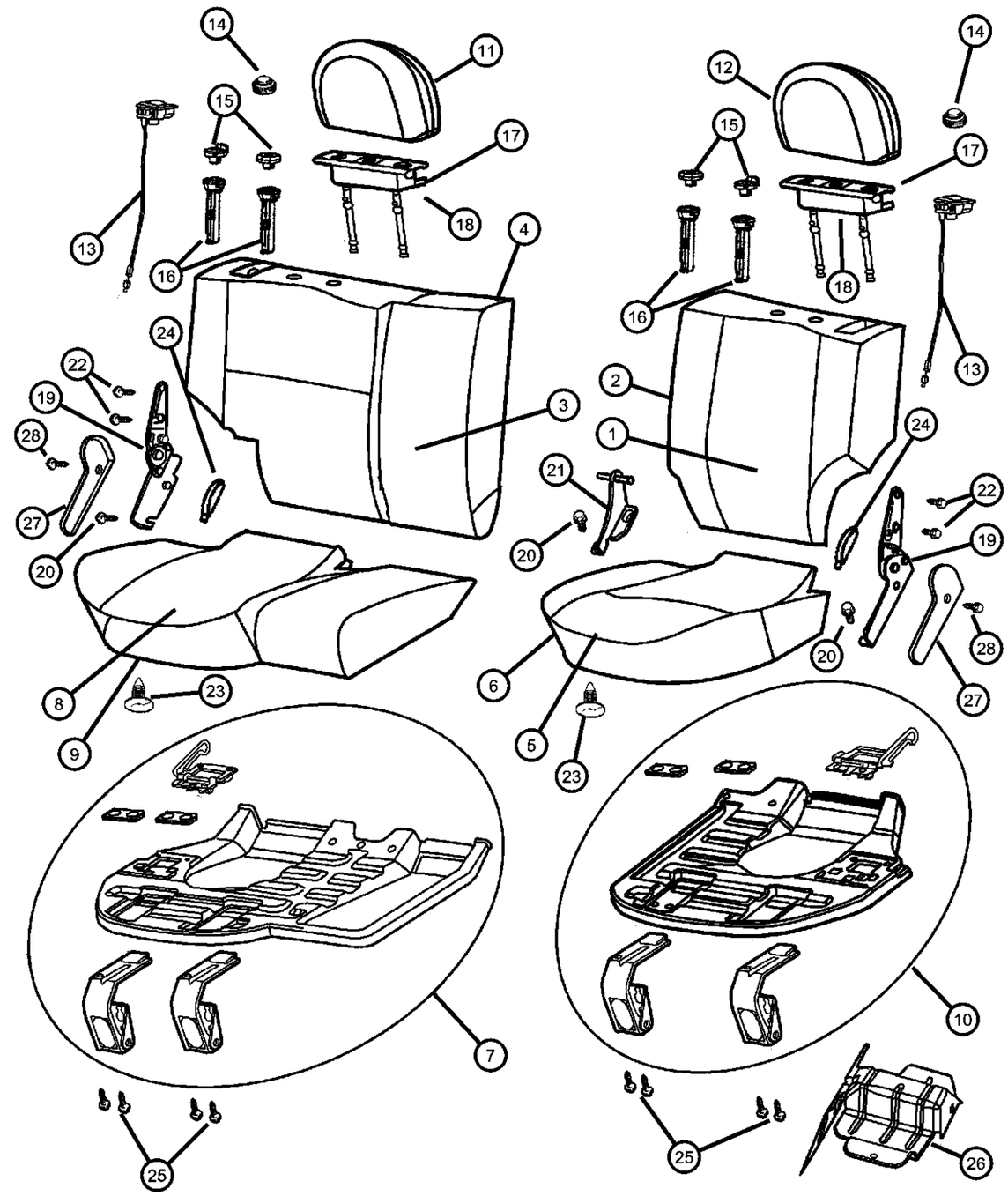

ITEM	PART NUMBER	QTY	LINE	SERIES	BODY	ENGINE	TRANS	TRIM	DESCRIPTION
1									COVER, Rear Seat Back, 40%
	0WN631DVAA	1						*XL	[DV]
	0WN631L5AA	1						*XL	[L5]
	0WN631T5AA	1						*XL	[T5]
2									SEAT BACK, Rear, 40%
	0WN591DVAA	1						*XL	[DV]
	0WN591L5AA	1						*XL	[L5]
	0WN591T5AA	1						*XL	[T5]
3									COVER, Rear Seat Back, 60%
	0WN621DVAA	1						*XL	[DV]
	0WN621L5AA	1						*XL	[L5]
	0WN621T5AA	1						*XL	[T5]
4									SEAT BACK, Rear, 60%
	0WN581DVAA	1						*XL	[DV]
	0WN581L5AA	1						*XL	[L5]
	0WN581T5AA	1						*XL	[T5]
5									COVER, Rear Seat Cushion, 40%
	0WN571DVAA	1						*XL	[DV]
	0WN571L5AA	1						*XL	[L5]
	0WN571T5AA	1						*XL	[T5]
6									CUSHION, Rear Seat, 40%
	0WN551DVAA	1						*XL	[DV]
	0WN551L5AA	1						*XL	[L5]
	0WN551T5AA	1						*XL	[T5]
7	05013119AA	1						*XL	PANEL, Seat Cushion Base, 60%
8									COVER, Rear Seat Cushion, 60%
	0WN561DVAA	1						*XL	[DV]
	0WN561L5AA	1						*XL	[L5]
	0WN561T5AA	1						*XL	[T5]
9									CUSHION, Rear Seat, 60%
	0WN541DVAA	1						*XL	[DV]
	0WN541L5AA	1						*XL	[L5]
	0WN541T5AA	1						*XL	[T5]

GRAND CHEROKEE (WJ)

SERIES	LINE	BODY	ENGINE	TRANSMISSION
H = Laredo M = Sport P = Limited S = Overland	T = JEEP - 2WD J = JEEP - 4WD U = JEEP - 4WD (RHD)	74 = SPORT UTILITY 4-DR	ERH = Engine - 4.0L Power Tech I-6 EVA = Engine- 4.7L V8 MPI EVC = Engine - 4.7L HO V8 MPI ER0 = All 4.0L 6 Cyl. Gas EV0 = All 4.7L Gas	DGK = 4 Speed Auto, 42RE DGQ = 5 Speed Auto, 45RFE DG0 = All Automatic Transmissions

AR = use ase required - = Non illustrrated part

<< RETURN TO GROUP INDEX

Rear Seat, Trim Code [XL]
Figure IWJ-630

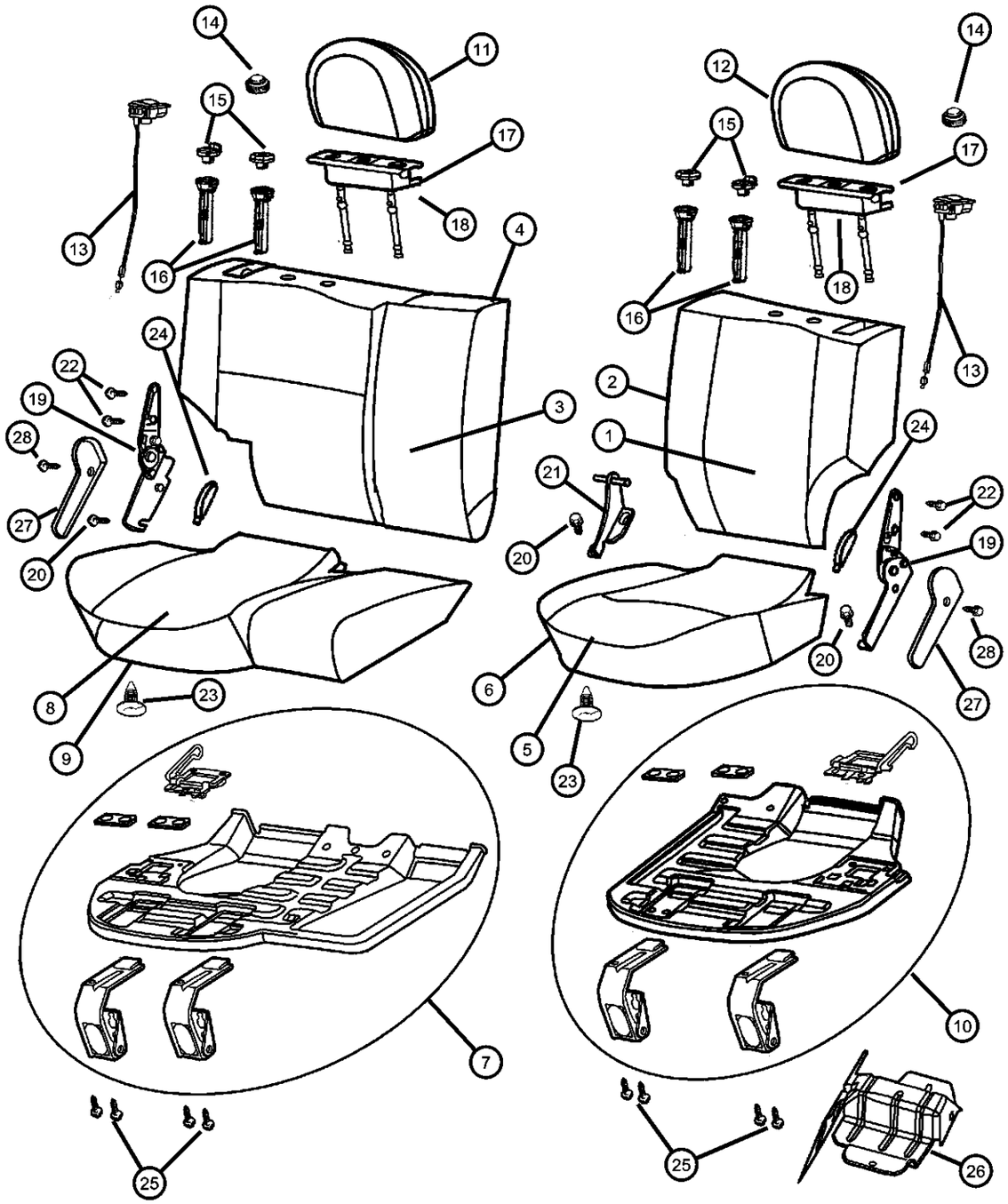

ITEM	PART NUMBER	QTY	LINE	SERIES	BODY	ENGINE	TRANS	TRIM	DESCRIPTION
10	05013118AA	1						*XL	PANEL, Seat Cushion Base, 40%
11									HEADREST, Rear, Right
	0UK161DVAA	1						*XL	[DV]
	0UK161L5AA	1						*XL	[L5]
	0UK161T5AA	1						*XL	[T5]
12									HEADREST, Rear, Left
	0UK171DVAA	1						*XL	[DV]
	0UK171L5AA	1						*XL	[L5]
	0UK171T5AA	1						*XL	[T5]
13									CONTROL, SEAT RELEASE
	0SX641DVAA	1						*XL	[DV]
	0SX641L5AA	1						*XL	[L5]
	0SX641T5AA	1						*XL	[T5]
14									HANDLE, Headrest
	05013168AA	1						*XL	Right
	05013169AA	1						*XL	Left
15									COVER, Headrest Sleeve
	0UK041DVAA	1						*XL	[DV], Without Button
	0UK041L5AA	1						*XL	[L5], Without Button
	0UK041T5AA	1						*XL	[T5], Without Button
	0UK051DVAA	1						*XL	[DV], With Button
	0UK051L5AA	1						*XL	[L5], With Button
	0UK051T5AA	1						*XL	[T5], With Button
16	05013152AA	2						*XL	CYLINDER, Headrest
17									BRACKET AND HINGE, Headrest
	05016178AA	1						*XL	Right
	05016179AA	1						*XL	Left
18									SHIELD, Headrest
	05016920AA	1						*XL	Right
	05016921AA	1						*XL	Left
19									LATCH, Seat
	05080270AA	1						*XL	Right
	05080271AA	1						*XL	Left

GRAND CHEROKEE (WJ)

SERIES	LINE	BODY	ENGINE	TRANSMISSION
H = Laredo M = Sport P = Limited S = Overland	T = JEEP - 2WD J = JEEP - 4WD U = JEEP - 4WD (RHD)	74 = SPORT UTILITY 4-DR	ERH = Engine - 4.0L Power Tech I-6 EVA = Engine- 4.7L V8 MPI EVC = Engine - 4.7L HO V8 MPI ER0 = All 4.0L 6 Cyl. Gas EV0 = All 4.7L Gas	DGK = 4 Speed Auto, 42RE DGQ = 5 Speed Auto, 45RFE DG0 = All Automatic Transmissions

AR = use ase required - = Non illustrrated part

Rear Seat, Trim Code [XL]
Figure IWJ-630

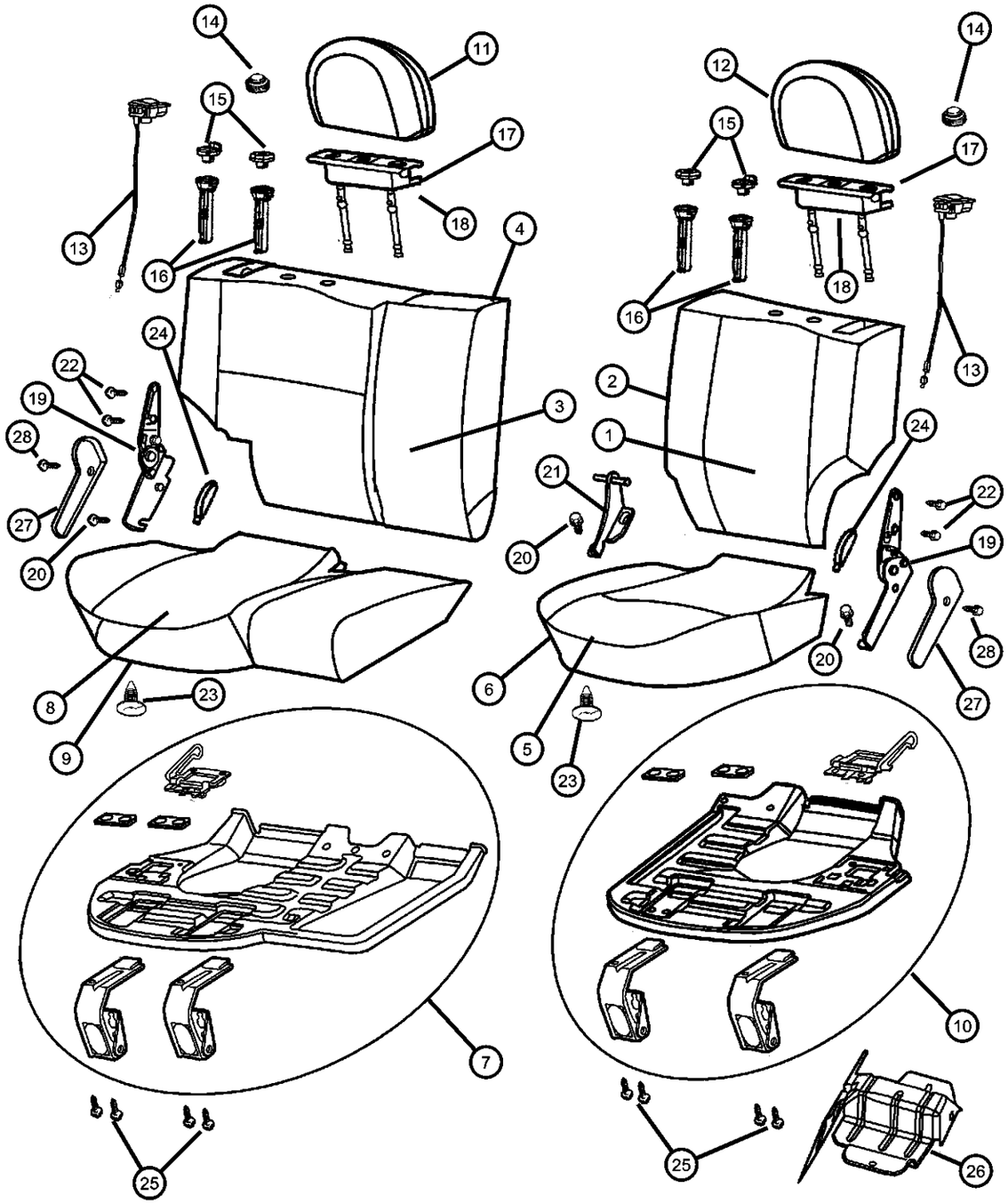

ITEM	PART NUMBER	QTY	LINE	SERIES	BODY	ENGINE	TRANS	TRIM	DESCRIPTION
20	06507385AA	4							SCREW AND WASHER, Hex Head
21	05080268AA	1						*XL	BRACKET, Pivot
22	04720768	4						*XL	BOLT, Recliner to Seat Back
23	05019522AA	2						*XL	RETAINER, Cushion Cover
24									STRAP, Seat Pull
	0SL001DVAA	1						*XL	[DV]
	0SL001L5AA	1						*XL	[L5]
	0SL001T5AA	1						*XL	[T5]
25	06100558	8							BOLT AND CONED WASHER, Hex Head, M6x25x14
26									BRACKET, Seat
	55196740AB	1							Rear Seat Cushion Latch, Right
	55196741AD	1							Rear Seat Cushion Latch, Left
27									COVER, Seat latch
	0UN701DVAA	1						*XL	[DV], Right
	0UN701L5AA	1						*XL	[L5], Right
	0UN701T5AA	1						*XL	[T5], Right
	0UN711DVAA	1						*XL	[DV], Left
	0UN711L5AA	1						*XL	[L5], Left
	0UN711T5AA	1						*XL	[T5], Left
28	05072471AA	2						*XL	RIVET

GRAND CHEROKEE (WJ)

SERIES	LINE	BODY	ENGINE	TRANSMISSION
H = Laredo	T = JEEP - 2WD	74 = SPORT UTILITY 4-DR	ERH = Engine - 4.0L Power Tech I-6	DGK = 4 Speed Auto, 42RE
M = Sport	J = JEEP - 4WD		EVA = Engine- 4.7L V8 MPI	DGQ = 5 Speed Auto, 45RFE
P = Limited	U = JEEP - 4WD (RHD)		EVC = Engine - 4.7L HO V8 MPI	DG0 = All Automatic Transmissions
S = Overland			ER0 = All 4.0L 6 Cyl. Gas	
			EV0 = All 4.7L Gas	

AR = use ase required - = Non illustrrated part

Rear Seat, Trim Code [NL]
Figure IWJ-640

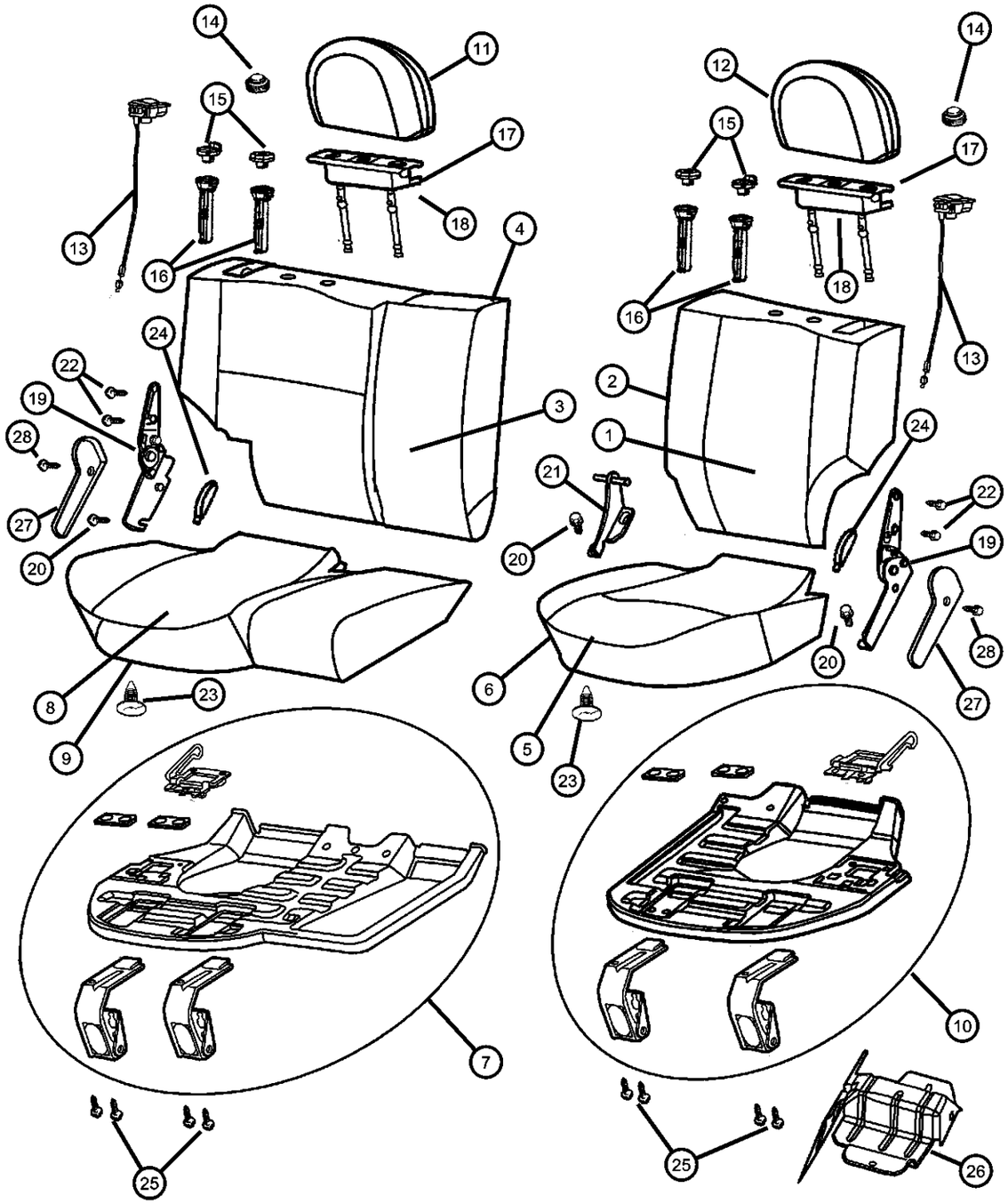

ITEM	PART NUMBER	QTY	LINE	SERIES	BODY	ENGINE	TRANS	TRIM	DESCRIPTION
1	0WK671DBAA	1						*NL	COVER, Rear Seat Back, 40%
2	0WK651DBAA	1						*NL	SEAT BACK, Rear, 40%
3	0WK661DBAA	1						*NL	COVER, Rear Seat Back, 60%
4	0WK641DBAA	1						*NL	SEAT BACK, Rear, 60%
5	0WK631DBAA	1						*NL	COVER, Rear Seat Cushion, 40%
6	0WK591DBAA	1						*NL	CUSHION, Rear Seat, 40%
7	05013119AA	1						*NL	PANEL, Seat Cushion Base, 60%
8	0WK621DBAA	1						*NL	COVER, Rear Seat Cushion, 60%
9	0WK581DBAA	1						*NL	CUSHION, Rear Seat, 60%
10	05013118AA	1						*NL	PANEL, Seat Cushion Base, 40%
11	0WK681DBAA	1						*NL	HEADREST, Rear, Right
12	0WK691DBAA	1						*NL	HEADREST, Rear, Left
13	0SX641DBAA	1						*NL	CONTROL, SEAT RELEASE
14									HANDLE, Headrest
	05013168AA	1						*NL	Right
	05013169AA	1						*NL	Left
15									COVER, Headrest Sleeve
	0UK041DBAA	1						*NL	Without Button
	0UK051DBAA	1						*NL	With Button
16	05013152AA	2						*NL	CYLINDER, Headrest
17									BRACKET AND HINGE, Headrest
	05016178AA	1						*NL	Right
	05016179AA	1						*NL	Left
18									SHIELD, Headrest
	05016920AA	1						*NL	Right
	05016921AA	1						*NL	Left
19									LATCH, Seat
	05080270AA	1						*NL	Right
	05080271AA	1						*NL	Left
20	06507385AA	4							SCREW AND WASHER, Hex Head
21	05080268AA	1						*NL	BRACKET, Pivot
22	04720768	4						*NL	BOLT, Recliner to Seat Back
23	05019522AA	2						*NL	RETAINER, Cushion Cover

GRAND CHEROKEE (WJ)

SERIES	LINE	BODY	ENGINE	TRANSMISSION
H = Laredo M = Sport P = Limited S = Overland	T = JEEP - 2WD J = JEEP - 4WD U = JEEP - 4WD (RHD)	74 = SPORT UTILITY 4-DR	ERH = Engine - 4.0L Power Tech I-6 EVA = Engine- 4.7L V8 MPI EVC = Engine - 4.7L HO V8 MPI ER0 = All 4.0L 6 Cyl. Gas EV0 = All 4.7L Gas	DGK = 4 Speed Auto, 42RE DGQ = 5 Speed Auto, 45RFE DG0 = All Automatic Transmissions

AR = use ase required - = Non illustrrated part

Rear Seat, Trim Code [NL]
Figure IWJ-640

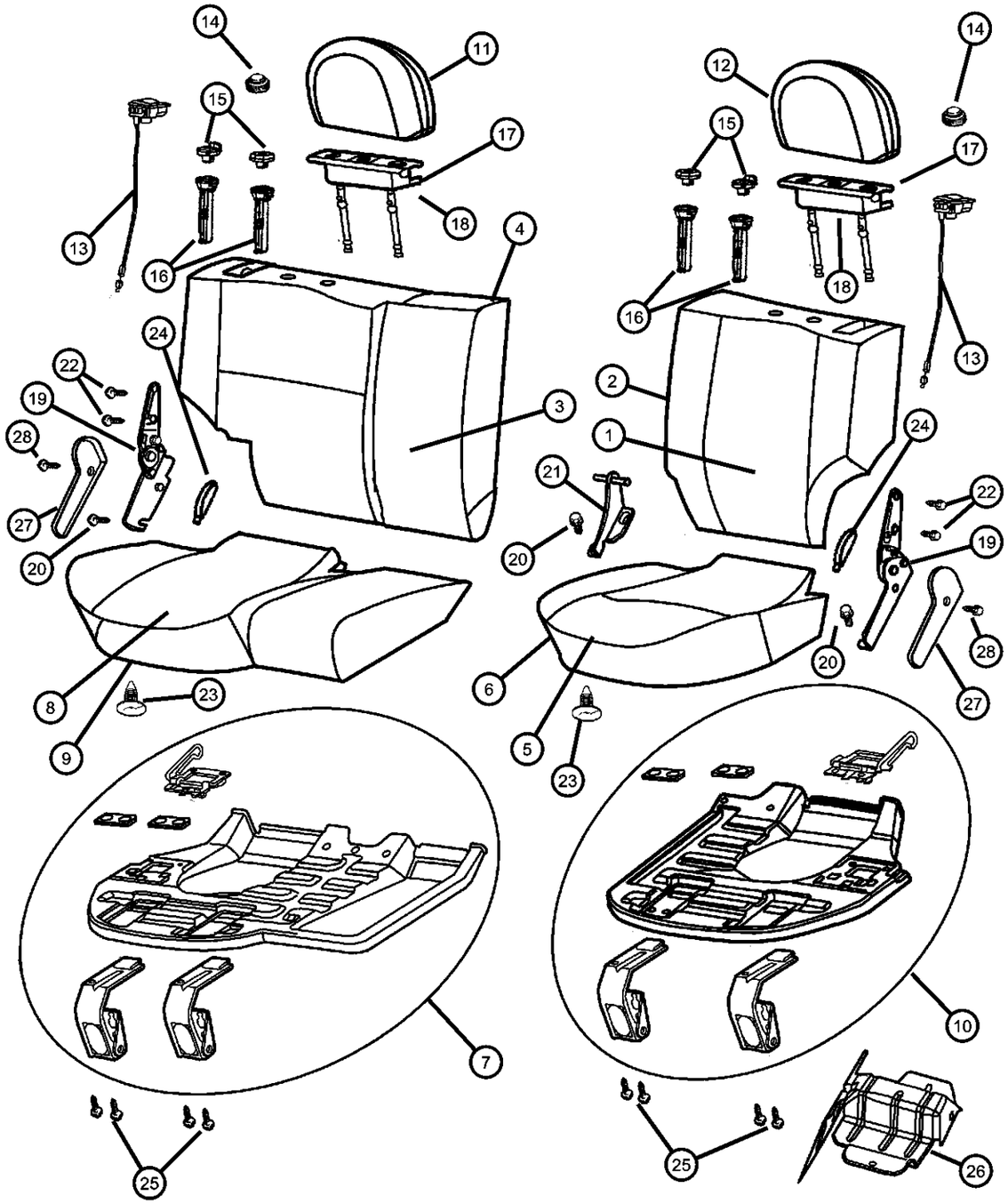

ITEM	PART NUMBER	QTY	LINE	SERIES	BODY	ENGINE	TRANS	TRIM	DESCRIPTION
24	0SL001DBAA	1						*NL	STRAP, Seat Pull
25	06100558	8							BOLT AND CONED WASHER, Hex Head, M6x25x14
26									BRACKET, Seat
	55196740AB	1							Rear Seat Cushion Latch, Right
	55196741AD	1							Rear Seat Cushion Latch, Left
27									COVER, Seat latch
	0UN701DVAA	1						*NL	Right
	0UN711DVAA	1						*NL	Left
28	05072471AA	2						*NL	RIVET

GRAND CHEROKEE (WJ)

SERIES	LINE	BODY	ENGINE	TRANSMISSION
H = Laredo M = Sport P = Limited S = Overland	T = JEEP - 2WD J = JEEP - 4WD U = JEEP - 4WD (RHD)	74 = SPORT UTILITY 4-DR	ERH = Engine - 4.0L Power Tech I-6 EVA = Engine- 4.7L V8 MPI EVC = Engine - 4.7L HO V8 MPI ER0 = All 4.0L 6 Cyl. Gas EV0 = All 4.7L Gas	DGK = 4 Speed Auto, 42RE DGQ = 5 Speed Auto, 45RFE DG0 = All Automatic Transmissions

AR = use ase required - = Non illustrrated part

Front Seat
Figure IWJ-710

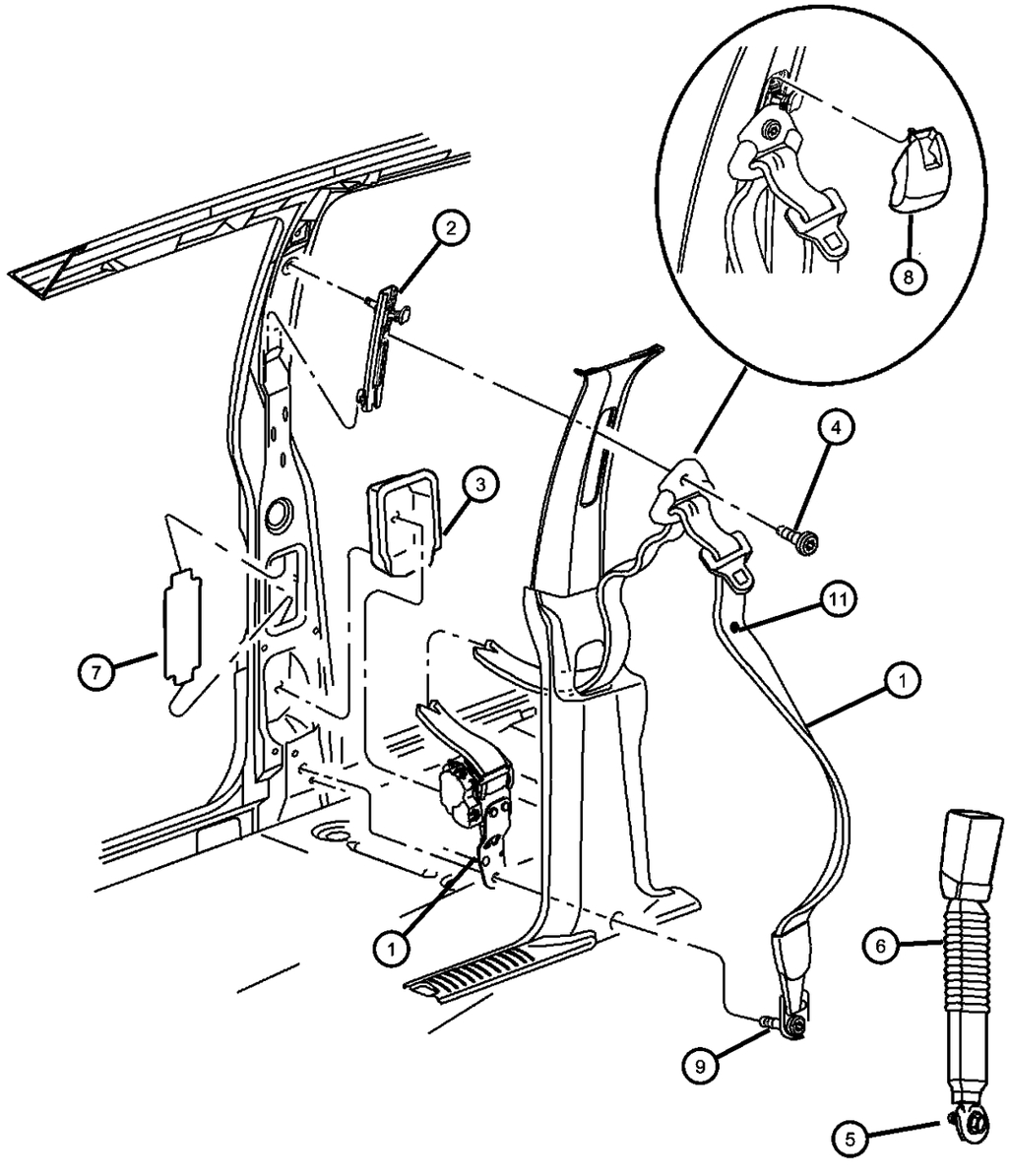

ITEM	PART NUMBER	QTY	LINE	SERIES	BODY	ENGINE	TRANS	TRIM	DESCRIPTION
1									SEAT BELT, Front Outer
	5GX991L5AA	1						*O0	[L5], Left
	5GX99XDVAA	1						*O0	[DB, DV], Left
	5GX99XT5AA	1						*O0	[T5], Left
	5GY021L5AA	1						*O0	[L5], Right
	5GY02XDVAA	1						*O0	[DB, DV], Right
	5GY02XT5AA	1						*O0	[T5], Right
2									ADJUSTER, Seat Belt Turning Loop
	5HP56TL2AA	2						*O0	[DV, L5]
	5HP56XDBAA	2						*O0	[DB]
	5HP56XT5AA	2						*O0	[T5]
3									SHIELD, Seat Belt Retractor
	55196920AA	1							Right
	55196921AA	1							Left
4	06035888	2							SCREW, Shoulder
5	06504973AA	2						*O0	SCREW
6									SEAT BELT, Front Inner
	5GY001DVAB	2						*O0	[DB, DV]
	5GY001L5AB	2						*O0	[L5]
	5GY001T5AB	2						*O0	[T5]
7	55116545AB	2							SHIELD, Seat Belt Retractor
8									COVER, Adjustable Turning Loop
	5GZ63TL2AA	2						*O0	[L5, DV]
	5GZ63XDBAA	2						*O0	[DB]
	5GZ63XT5AA	2						*O0	[T5]
9	06504867AA	1						*O0	SCREW
-10	05018505AA	1							EXTENDER, Seat Belt
11									BUTTON, BELT WEBBING
	05093280AA	1						*O0	[DB, DV]
	05093282AA	1						*O0	[L5]
	05093283AA	1						*O0	[T5]

GRAND CHEROKEE (WJ)

SERIES	LINE	BODY	ENGINE	TRANSMISSION
H = Laredo M = Sport P = Limited S = Overland	T = JEEP - 2WD J = JEEP - 4WD U = JEEP - 4WD (RHD)	74 = SPORT UTILITY 4-DR	ERH = Engine - 4.0L Power Tech I-6 EVA = Engine- 4.7L V8 MPI EVC = Engine - 4.7L HO V8 MPI ER0 = All 4.0L 6 Cyl. Gas EV0 = All 4.7L Gas	DGK = 4 Speed Auto, 42RE DGQ = 5 Speed Auto, 45RFE DG0 = All Automatic Transmissions

Rear Seat Belt
Figure IWJ-720

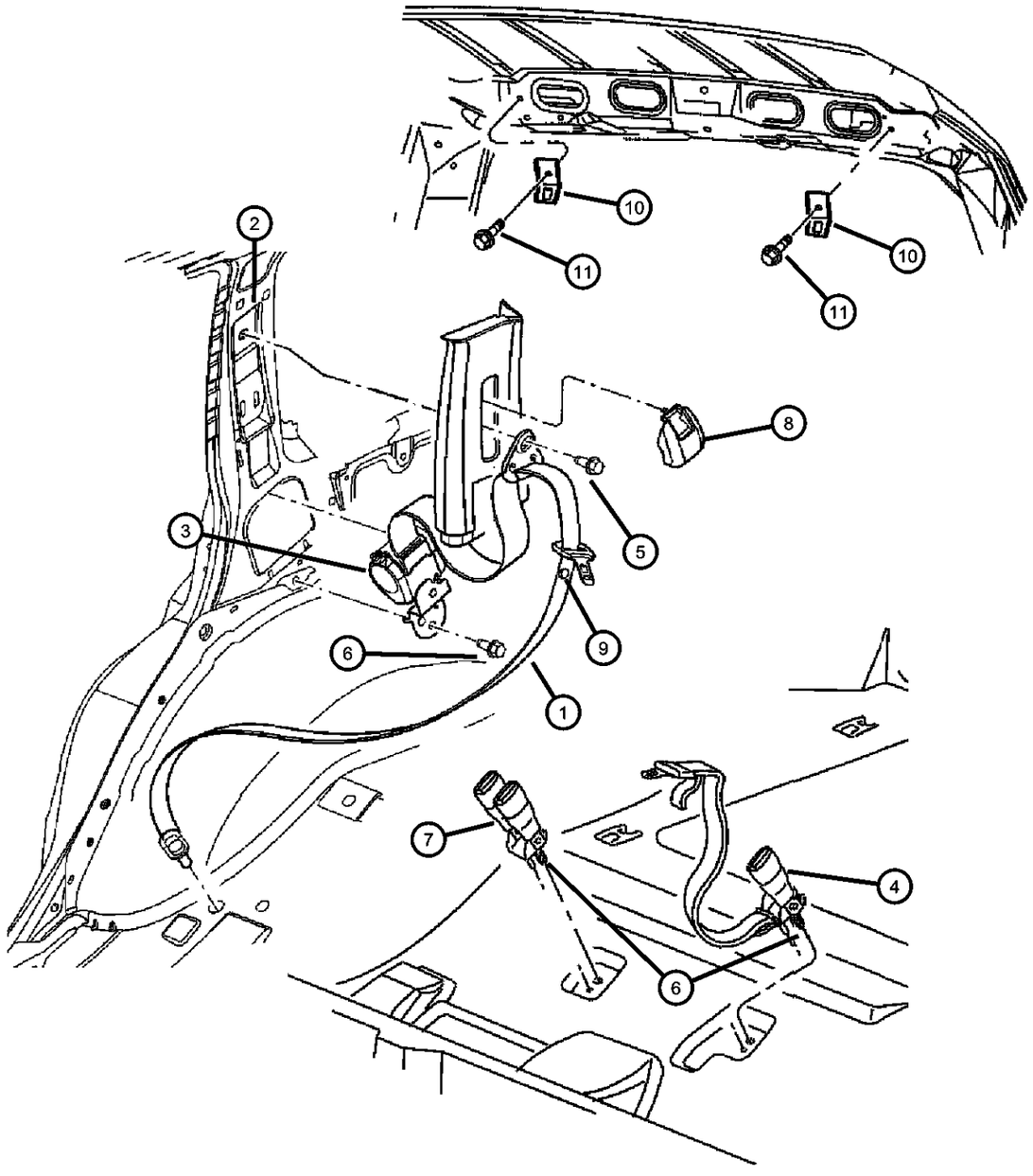

ITEM	PART NUMBER	QTY	LINE	SERIES	BODY	ENGINE	TRANS	TRIM	DESCRIPTION
1									SEAT BELT, Rear Outer
	5GY041L5AA	1						*O0	[L5], With Velcro, Right
	5GY04XDVAA	1						*O0	[DB, DV], With Velcro, Right
	5GY04XT5AA	1						*O0	[T5], With Velcro, Right
	5GY041L5AC	1						*O0	[L5], Without Velcro, Right
	5GY04XD-VAC	1						*O0	[DB, DV], Without Velcro, Right
	5GY04XT5AC	1						*O0	[T5], Without Velcro, Right
	5GY051L5AA	1						*O0	[L5], With Velcro, Left
	5GY05XDVAA	1						*O0	[DB, DV], With Velcro, Left
	5GY05XT5AA	1						*O0	[T5], With Velcro, Left
	5GY051L5AC	1						*O0	[L5], Without Velcro, Left
	5GY05XD-VAC	1						*O0	[DB, DV], Without Velcro, Left
	5GY05XT5AC	1						*O0	[T5], Without Velcro, Left
2									ADJUSTER, Seat Belt Turning Loop
	55196689AB	2							
	5HP56TL2AA	2						*O0	[DV, L5]
	5HP56XDBAA	2						*O0	[DB]
	5HP56XT5AA	2						*O0	[T5]
3	55196922AA	2							SHIELD, Seat Belt Retractor
4									SEAT BELT, Rear Inner, Left
	5GY091DVAB	1						*O0	[DB, DV]
	5GY091L5AB	1						*O0	[L5]
	5GY091T5AB	1						*O0	[T5]
5	06035888	2							SCREW, Shoulder
6	06505286AA	2							SCREW
7									SEAT BELT, Rear Inner, Right
	5GY081DVAB	1						*O0	[DB, DV]
	5GY081L5AB	1						*O0	[L5]
	5GY081T5AB	1						*O0	[T5]
8									COVER, Adjustable Turning Loop
	5GZ63TL2AA	2						*O0	[L5, DV]
	5GZ63XDBAA	2						*O0	[DB]

GRAND CHEROKEE (WJ)

SERIES	LINE	BODY	ENGINE	TRANSMISSION
H = Laredo M = Sport P = Limited S = Overland	T = JEEP - 2WD J = JEEP - 4WD U = JEEP - 4WD (RHD)	74 = SPORT UTILITY 4-DR	ERH = Engine - 4.0L Power Tech I-6 EVA = Engine- 4.7L V8 MPI EVC = Engine - 4.7L HO V8 MPI ER0 = All 4.0L 6 Cyl. Gas EV0 = All 4.7L Gas	DGK = 4 Speed Auto, 42RE DGQ = 5 Speed Auto, 45RFE DG0 = All Automatic Transmissions

Rear Seat Belt
Figure IWJ-720

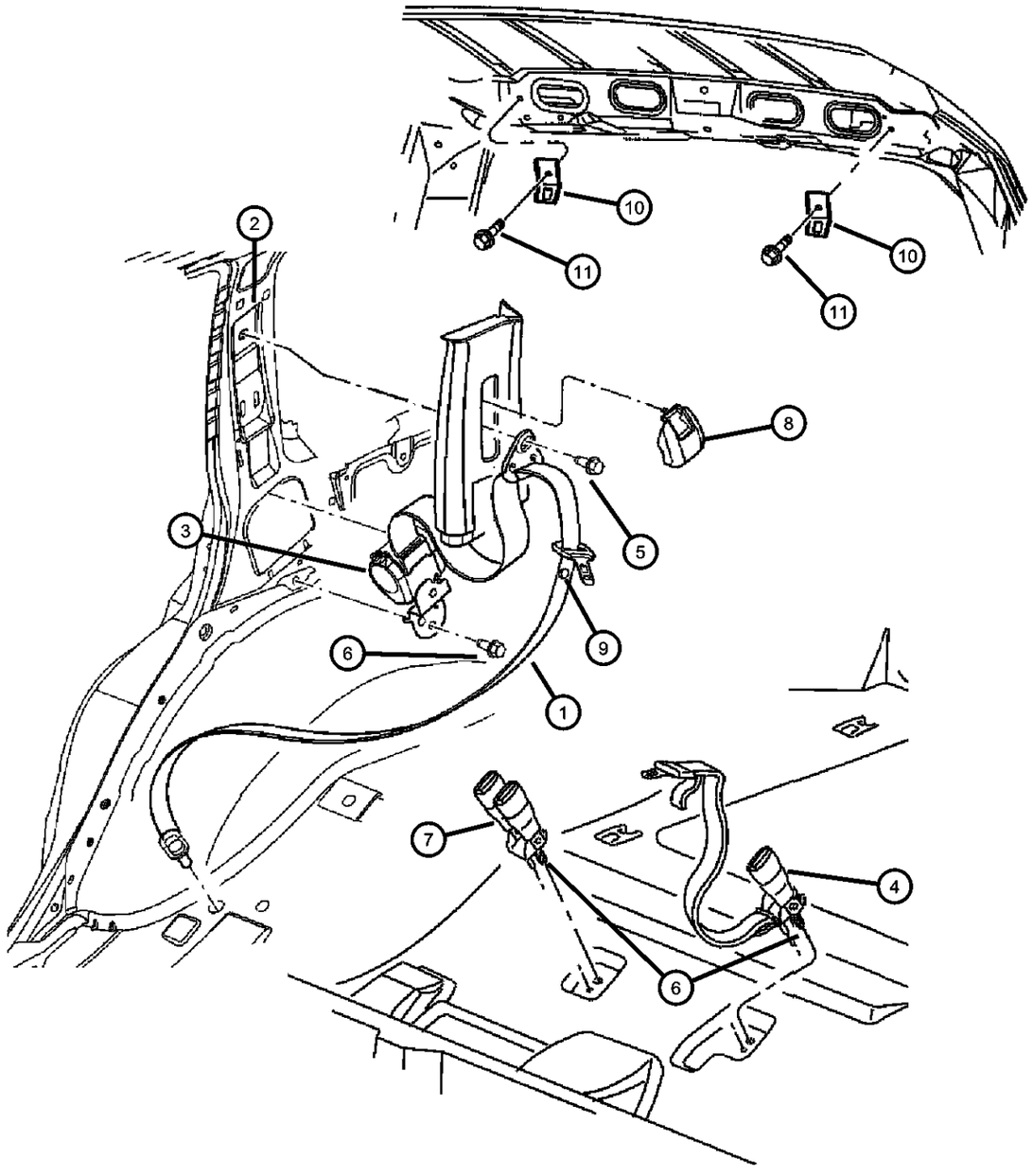

ITEM	PART NUMBER	QTY	LINE	SERIES	BODY	ENGINE	TRANS	TRIM	DESCRIPTION
	5GZ63XT5AA	2						*O0	[T5]
9									BUTTON, BELT WEBBING
	05093280AA	1						*O0	[DB, DV]
	05093282AA	1						*O0	[L5]
	05093283AA	1						*O0	[T5]
10	55196861AB	2							BRACKET
11	06504438	2							BOLT, Hex Flange Head, M8x35
-12									BEZEL, Tether anchor
	5GX261DBAB	1						*O0	[DB], Right
	5GX26TL2AB	1						*O0	[DV, L5, T5], Right
	5GX271DBAB	1						*O0	[DB], Left
	5GX27TL2AB	1						*O0	[DV, L5, T5], Left

GRAND CHEROKEE (WJ)

SERIES	LINE	BODY	ENGINE	TRANSMISSION
H = Laredo M = Sport P = Limited S = Overland	T = JEEP - 2WD J = JEEP - 4WD U = JEEP - 4WD (RHD)	74 = SPORT UTILITY 4-DR	ERH = Engine - 4.0L Power Tech I-6 EVA = Engine- 4.7L V8 MPI EVC = Engine - 4.7L HO V8 MPI ER0 = All 4.0L 6 Cyl. Gas EV0 = All 4.7L Gas	DGK = 4 Speed Auto, 42RE DGQ = 5 Speed Auto, 45RFE DG0 = All Automatic Transmissions

AR = use ase required - = Non illustrrated part

Recliner and Adjusters
Figure IWJ-810

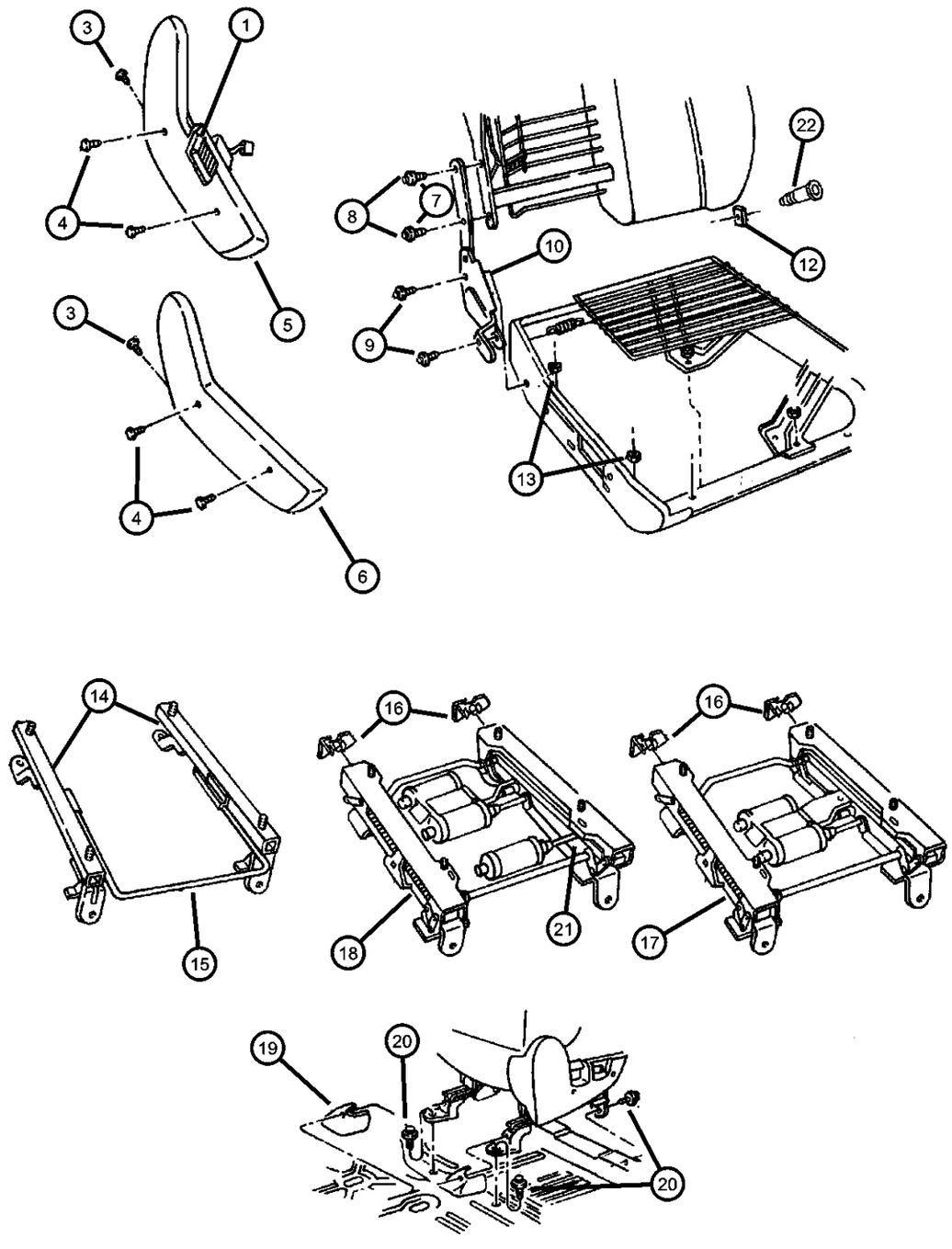

ITEM	PART NUMBER	QTY	LINE	SERIES	BODY	ENGINE	TRANS	TRIM	DESCRIPTION
1									SWITCH, Seat
	04373666	2						*K7	6 Way Power, Without Power Recliner
		1						*XL	6 Way Power, Without Power Recliner
		2						*E7	6 Way Power, Without Power Recliner
		2						*JL	6 Way Power, Without Power Recliner
	04601756AB	1						*NL	10 Way Power, With Power Recliner, Right
		1						*XL	10 Way Power, With Power Recliner, Right
	04601757AB	1						*XL	10 Way Power, With Power Recliner, Left
		1						*NL	10 Way Power, With Power Recliner, Left
-2									KNOB, Power Seat Switch
	04607042	1						*JL	With Arrows, Right
		1						*NL	With Arrows,
		1						*XL	With Arrows
	04607042AB	1						*XL	Without Arrows, Right
		1						*NL	Without Arrows, Right
	04607043	1						*JL	With Arrows, Left
		1						*XL	With Arrows, Left
		1						*NL	With Arrows, Left
	04607043AB	1						*XL	Without Arrows, Left
		1						*NL	Without Arrows, Left
3									SCREW, Trim
	04720769	2						*NL	
		2						*JL	
		2						*E7	
		2						*XL	
4									SCREW, Trim
	04720770	4						*NL	
		4						*JL	
		4						*E7	
		4						*XL	

GRAND CHEROKEE (WJ)

SERIES	LINE	BODY	ENGINE	TRANSMISSION
H = Laredo M = Sport P = Limited S = Overland	T = JEEP - 2WD J = JEEP - 4WD U = JEEP - 4WD (RHD)	74 = SPORT UTILITY 4-DR	ERH = Engine - 4.0L Power Tech I-6 EVA = Engine- 4.7L V8 MPI EVC = Engine - 4.7L HO V8 MPI ER0 = All 4.0L 6 Cyl. Gas EV0 = All 4.7L Gas	DGK = 4 Speed Auto, 42RE DGQ = 5 Speed Auto, 45RFE DG0 = All Automatic Transmissions

AR = use ase required - = Non illustrrated part

Recliner and Adjusters
Figure IWJ-810

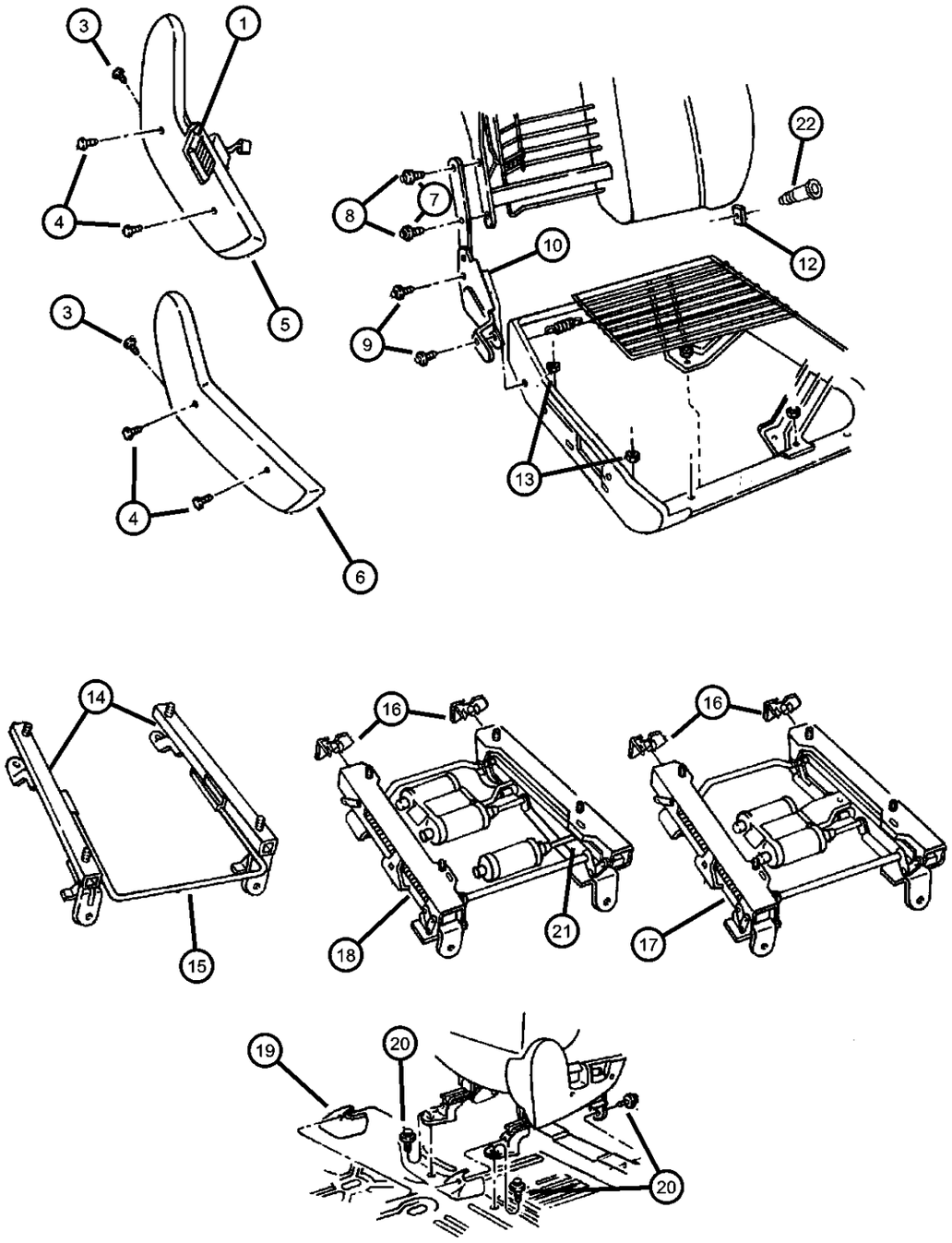

ITEM	PART NUMBER	QTY	LINE	SERIES	BODY	ENGINE	TRANS	TRIM	DESCRIPTION
5									SHIELD, Seat Adjuster
	0SL041DVAA	1						*NL	10 Way Power, Right
		1						*XL	[DV], 10 Way Power, Right
	0SL041L5AA	1						*XL	[L5], 10 Way Power, Right
	0SL041T5AA	1						*XL	[T5], 10 Way Power, Right
	0SL051DVAA	1						*NL	10 Way Power, Left
		1						*XL	[DV], 10 Way Power, Left
	0SL051L5AA	1						*XL	[L5], 10 Way Power, Left
	0SL051T5AA	1						*XL	[T5], 10 Way Power, Left
	0SL061DVAA	1						*JL	[DV], 6 Way Power, Right
		1						*E7	[DV], 6 Way Power, Right
	0SL061L5AA	1						*E7	[L5], 6 Way Power, Right
		1						*JL	[L5], 6 Way Power, Right
	0SL061T5AA	1						*E7	[T5], 6 Way Power, Right
		1						*JL	[T5], 6 Way Power, Right
	0SL071DVAA	1						*JL	[DV], 6 Way Power, Left
		1						*E7	[DV], 6 Way Power, Left
	0SL071L5AA	1						*E7	[L5], 6 Way Power, Left
		1						*JL	[L5], 6 Way Power, Left
	0SL071T5AA	1						*E7	[T5], 6 Way Power, Left
		1						*JL	[T5], 6 Way Power, Left
6									SHIELD, Seat Adjuster
	0SL021DVAA	1						*E7	[DV], Right, Manual
	0SL021L5AA	1						*E7	[L5], Right, Manual
	0SL021T5AA	1						*E7	[T5], Right, Manual
	0SL031DVAA	1						*E7	[DV], Left, Manual
	0SL031L5AA	1						*E7	[L5], Left, Manual
	0SL031T5AA	1						*E7	[T5], Left, Manual
7									BOLT, Recliner to Seat Back, Manual Upper
	04720768	4						*JL	
		4						*E7	
8									BOLT, Power Recliner

GRAND CHEROKEE (WJ)

SERIES	LINE	BODY	ENGINE	TRANSMISSION
H = Laredo M = Sport P = Limited S = Overland	T = JEEP - 2WD J = JEEP - 4WD U = JEEP - 4WD (RHD)	74 = SPORT UTILITY 4-DR	ERH = Engine - 4.0L Power Tech I-6 EVA = Engine- 4.7L V8 MPI EVC = Engine - 4.7L HO V8 MPI ER0 = All 4.0L 6 Cyl. Gas EV0 = All 4.7L Gas	DGK = 4 Speed Auto, 42RE DGQ = 5 Speed Auto, 45RFE DG0 = All Automatic Transmissions

AR = use ase required - = Non illustrrated part

Recliner and Adjusters
Figure IWJ-810

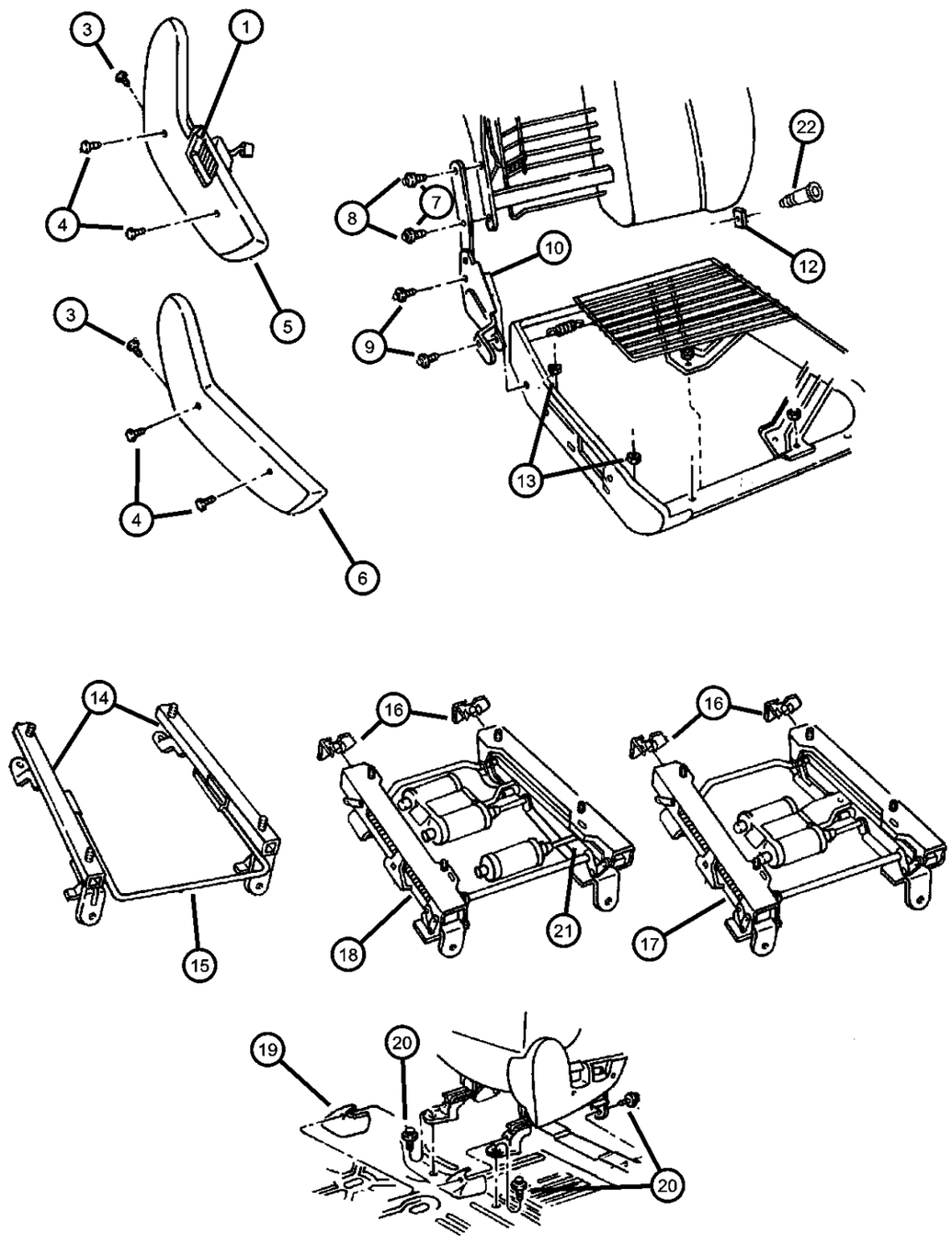

ITEM	PART NUMBER	QTY	LINE	SERIES	BODY	ENGINE	TRANS	TRIM	DESCRIPTION
	04882903	8						*NL	
		8						*JL	
		8						*E7	
		8						*XL	
9	04796793	4						*E7	BOLT, Recliner To Cushion, Front Seat
10									RECLINER, Seat Back
	04796714	1						*E7	Includes Handle, Right, Manual
	04796715	1						*E7	Includes Handle, Left, Manual
	05080510AA	1						*NL	Power Without Memory
		1						*JL	Power Without Memory, Right
		1						*XL	Power Without Memory, Right
	05080511AA	1						*JL	Power Without Memory, Left
	05080513AA	1						*NL	Power With Memory
		1						*XL	Power With Memory, Left
-11									KNOB, Power Seat Switch, Power Recliner
	04607044	1						*JL	With Arrows, Right
		1						*XL	With Arrows, Right
		1						*NL	With Arrows, Right
	04607044AB	1						*XL	Without Arrows, Right
		1						*NL	Without Arrows, Left
	04607045	1						*JL	With Arrows, Left
		1						*XL	With Arrows, Left
		1						*NL	With Arrows, Left
	04607045AB	1						*XL	Without Arrows, Left
		1						*NL	Without Arrows, Right
12	05101925AA	8						*O0	NUT, Seat Adjuster To Cushion
13	06101467	2							NUT, Hex Flange, M8x1.25
14									ADJUSTER, Manual Seat
	05015564AA	1						*E7	Right, Outboard
	05015565AA	1						*E7	Left, Outboard
	05015566AA	1						*E7	Right, Inboard
	05015567AA	1						*E7	Left, Inboard

GRAND CHEROKEE (WJ)

SERIES	LINE	BODY	ENGINE	TRANSMISSION
H = Laredo M = Sport P = Limited S = Overland	T = JEEP - 2WD J = JEEP - 4WD U = JEEP - 4WD (RHD)	74 = SPORT UTILITY 4-DR	ERH = Engine - 4.0L Power Tech I-6 EVA = Engine- 4.7L V8 MPI EVC = Engine - 4.7L HO V8 MPI ER0 = All 4.0L 6 Cyl. Gas EV0 = All 4.7L Gas	DGK = 4 Speed Auto, 42RE DGQ = 5 Speed Auto, 45RFE DG0 = All Automatic Transmissions

AR = use ase required - = Non illustrrated part

Recliner and Adjusters
Figure IWJ-810

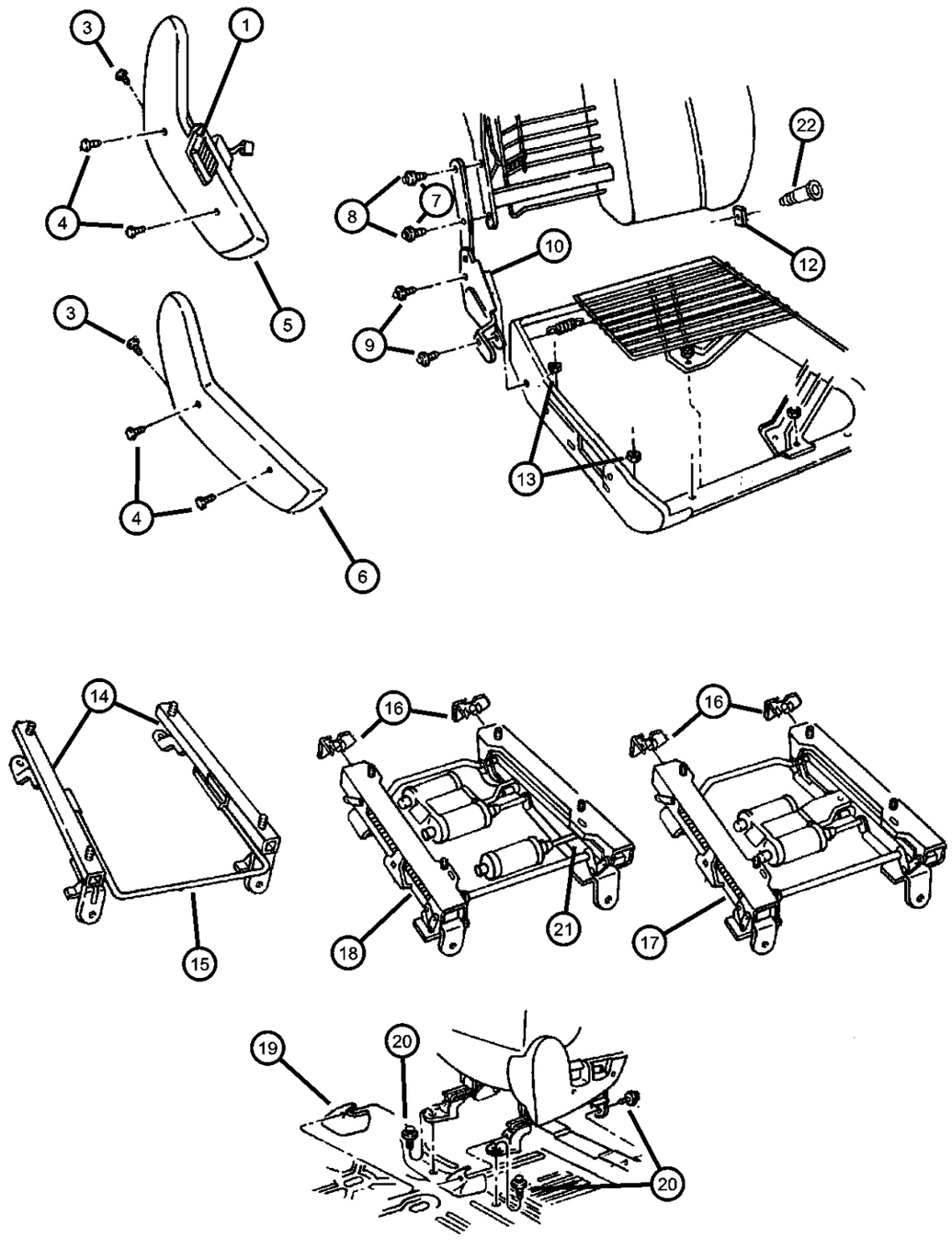

ITEM	PART NUMBER	QTY	LINE	SERIES	BODY	ENGINE	TRANS	TRIM	DESCRIPTION
15	04713930	2						*E7	HANDLE, Seat Release
16									SHIELD, Seat Adjuster
	04723888	2						*NL	Driver Inboard, Passenger Outboard
		2						*JL	Driver Inboard, Passenger Outboard
		2						*E7	Driver Inboard, Passenger Outboard
		2						*XL	Driver Inboard, Passenger Outboard
	04723889	2						*NL	Driver Outboard, Passenger Inboard
		2						*JL	Driver Outboard, Passenger Inboard
		2						*E7	Driver Outboard, Passenger Inboard
		2						*XL	Driver Outboard, Passenger Inboard
17									ADJUSTER, Power Seat, Without Memory
	05015570AA	1						*NL	Right
		1						*JL	Right
		1						*E7	Right
		1						*XL	Right
	05015571AA	1						*JL	Left
		1						*E7	Left
18									ADJUSTER, Power Seat, With Memory
	05015569AA	1						*NL	
		1						*XL	
19									COVER, Power Seat Track
	5FZ19WL8AA	4						*O0	[L5]
	5FZ19XDVAA	4						*O0	[DB, DV]
	5FZ19XTMAA	4						*O0	[T5]
20	06505040AA	8							SCREW, Hex Head, M10x1.5x40
21									BRACKET, Module, With Memory
	05013125AA	1						*NL	
		1						*JL	

GRAND CHEROKEE (WJ)

SERIES	LINE	BODY	ENGINE	TRANSMISSION
H = Laredo M = Sport P = Limited S = Overland	T = JEEP - 2WD J = JEEP - 4WD U = JEEP - 4WD (RHD)	74 = SPORT UTILITY 4-DR	ERH = Engine - 4.0L Power Tech I-6 EVA = Engine- 4.7L V8 MPI EVC = Engine - 4.7L HO V8 MPI ER0 = All 4.0L 6 Cyl. Gas EV0 = All 4.7L Gas	DGK = 4 Speed Auto, 42RE DGQ = 5 Speed Auto, 45RFE DG0 = All Automatic Transmissions

AR = use ase required - = Non illustrrated part

Recliner and Adjusters
Figure IWJ-810

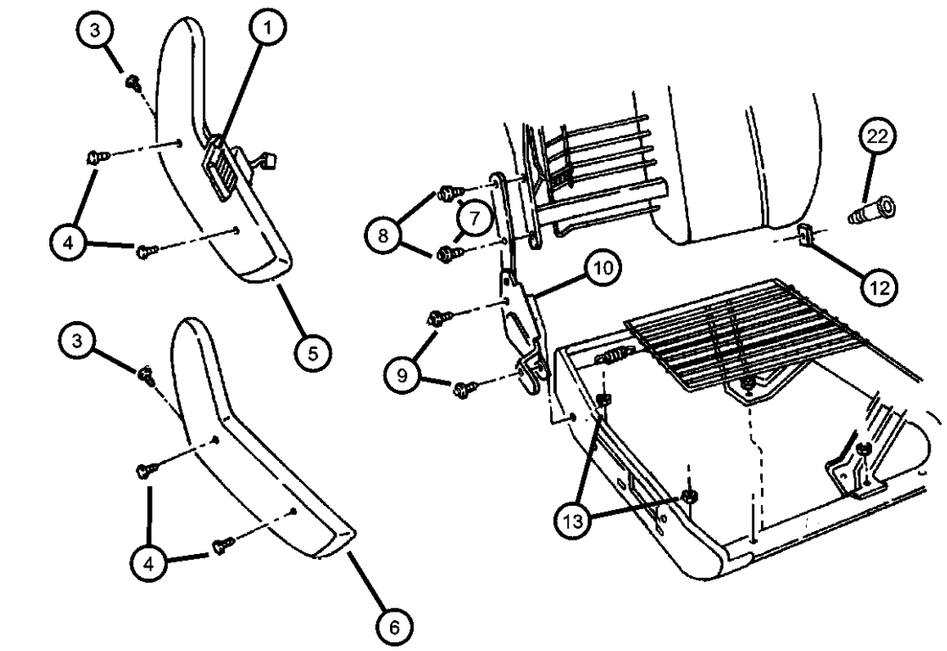

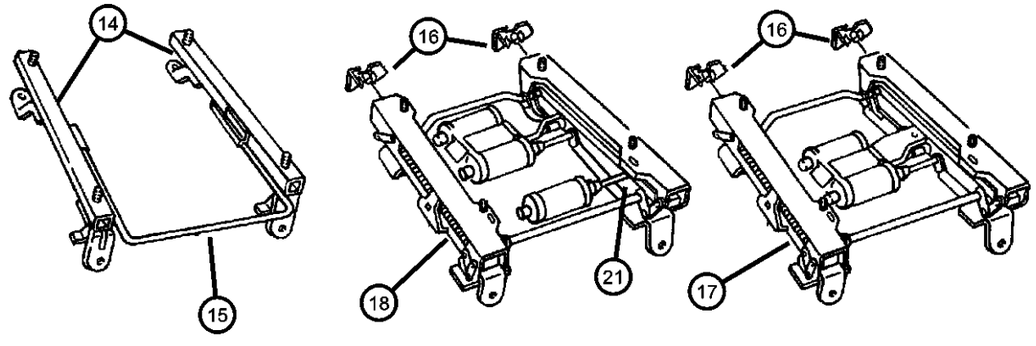

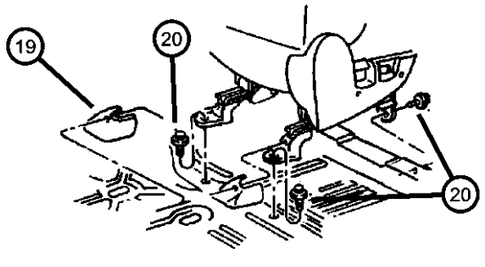

ITEM	PART NUMBER	QTY	LINE	SERIES	BODY	ENGINE	TRANS	TRIM	DESCRIPTION
		1						*XL	
22									BOLT, Shoulder, I.B.-Back To Cushion-Pivot
	05016212AA	2						*NL	
		2						*E7	
		2						*XL	

GRAND CHEROKEE (WJ)

SERIES	LINE	BODY	ENGINE	TRANSMISSION
H = Laredo M = Sport P = Limited S = Overland	T = JEEP - 2WD J = JEEP - 4WD U = JEEP - 4WD (RHD)	74 = SPORT UTILITY 4-DR	ERH = Engine - 4.0L Power Tech I-6 EVA = Engine- 4.7L V8 MPI EVC = Engine - 4.7L HO V8 MPI ER0 = All 4.0L 6 Cyl. Gas EV0 = All 4.7L Gas	DGK = 4 Speed Auto, 42RE DGQ = 5 Speed Auto, 45RFE DG0 = All Automatic Transmissions

AR = use ase required - = Non illustrrated part

Liftgate Panel and Scuff Plate
Figure IWJ-1010

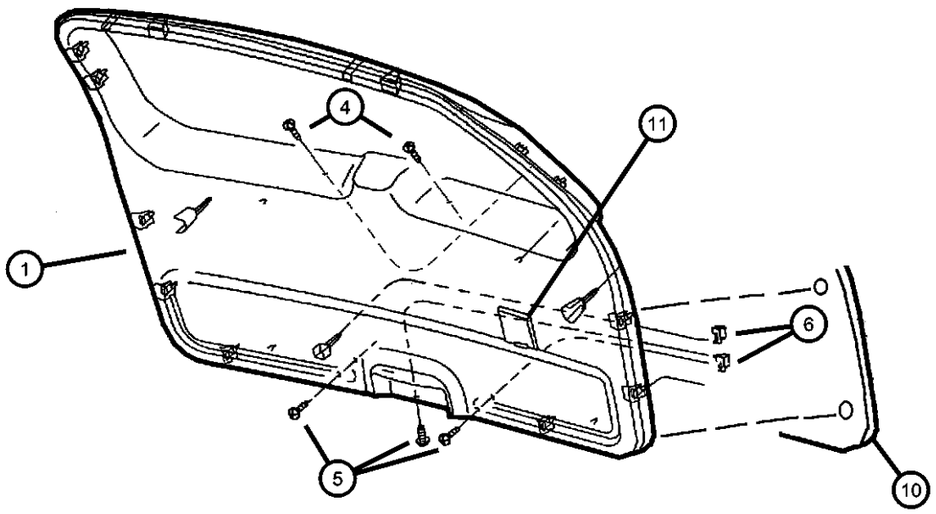

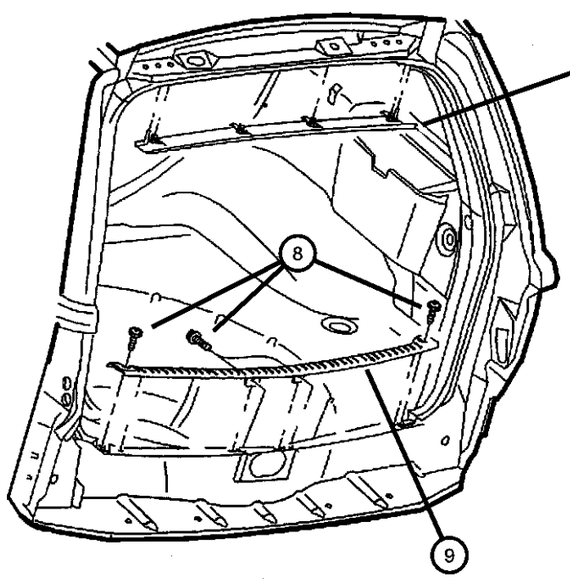

ITEM	PART NUMBER	QTY	LINE	SERIES	BODY	ENGINE	TRANS	TRIM	DESCRIPTION
1									PANEL, Liftgate
	5FS80WL5AG	1						*O0	[L5]
	5FS80XDVAG	1						*O0	[DB, DV]
	5FS80XT5AG	1						*O0	[T5]
-2	06502991	6						*O0	FASTENER, M7.1 Hole Push In, For M7.1 Hole
-3	06503709	4						*O0	PIN, Door Panel
4	06503709	4							SCREW AND WASHER, [.164-15x2.20], (NOT SERVICED)
5	06032723	3							SCREW, Self Tapping, M4.2x1.69x19.05
6	06032723	3							NUT, M4.2X1.70, (NOT SERVICED)
7									PANEL, Liftgate
	5FA67WL5AC	1						*O0	[L5]
	5FA67XDVAC	1						*O0	[DB, DV]
	5FA67XT5AC	1						*O0	[T5]
8	5FA67XT5AC	1							SCREW, [.164-18X.625], (NOT SERVICED),
9									PLATE, Liftgate Scuff
	5FS82WL5AC	1						*O0	[L5]
	5FS82XDVAC	1						*O0	[DB, DV]
	5FS82XT5AC	1						*O0	[T5]
10	55136185AC	1							INSULATION, Liftgate
11									COVER, Liftgate
	0TH63WL5AA	1						*O0	[L5]
	0TH63XDVAA	1						*O0	[DB, DV]
	0TH63XT5AA	1						*O0	[T5]

GRAND CHEROKEE (WJ)

SERIES	LINE	BODY	ENGINE	TRANSMISSION
H = Laredo M = Sport P = Limited S = Overland	T = JEEP - 2WD J = JEEP - 4WD U = JEEP - 4WD (RHD)	74 = SPORT UTILITY 4-DR	ERH = Engine - 4.0L Power Tech I-6 EVA = Engine- 4.7L V8 MPI EVC = Engine - 4.7L HO V8 MPI ER0 = All 4.0L 6 Cyl. Gas EV0 = All 4.7L Gas	DGK = 4 Speed Auto, 42RE DGQ = 5 Speed Auto, 45RFE DG0 = All Automatic Transmissions

Group - SWJ

Body Sheet Metal Except Doors

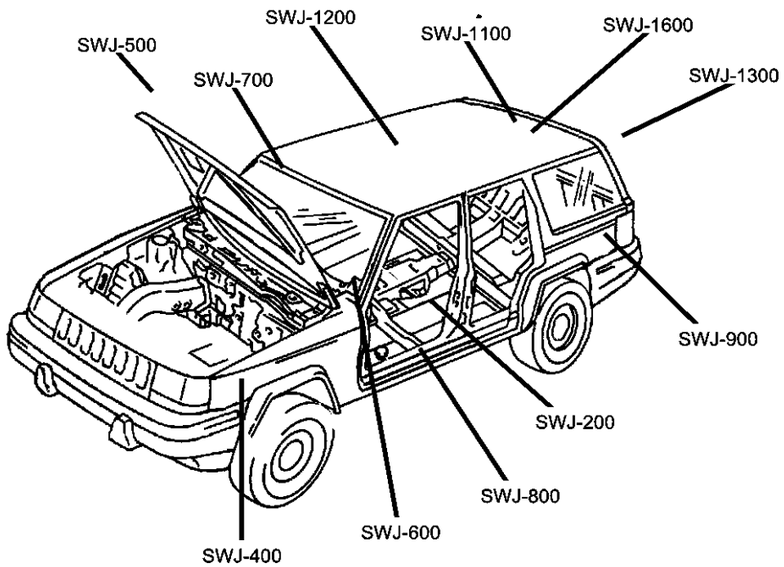

SWJ-1100 Roof Panels 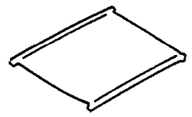	**SWJ-1200** Sunroof 	**SWJ-1300** Liftgate Panel 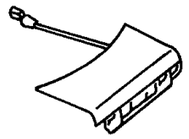	**SWJ-1600** Luggage Rack 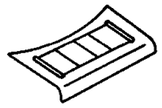
SWJ-200 Floor Pans 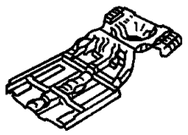	**SWJ-300** Plugs 	**SWJ-400** Front Fenders 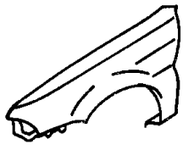	**SWJ-500** Hood and Hood Release 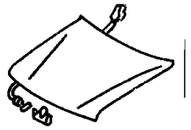
SWJ-600 Cowl and Dash Panel 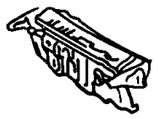	**SWJ-700** Glass and Rear View Mirror 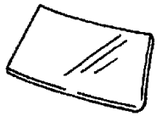	**SWJ-800** Aperture Panel 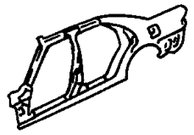	**SWJ-900** Quarter Panel and Pillars 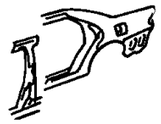

Group - SWJ Body Sheet Metal Except Doors

Illustration Title — Group-Fig. No.

Floor Pans
Front Floor Pan ..... Fig. SWJ - 210
Center and Rear Floor Pan ..... Fig. SWJ - 220

Plugs
Plugs ..... Fig. SWJ - 310

Front Fenders
Front Fender ..... Fig. SWJ - 410

Hood and Hood Release
Hood, Latch, Hinges ..... Fig. SWJ - 510

Cowl and Dash Panel
Panels, Cowl and Dash ..... Fig. SWJ - 610
Insulation, Dash And Cowl ..... Fig. SWJ - 620

Glass and Rear View Mirror
Glass, Windshield, Backlite, Quarter Window, Rear View Mirror ..... Fig. SWJ - 710

Aperture Panel
Panels, Body Side ..... Fig. SWJ - 810

Quarter Panel and Pillars
Panels, Rear Quarter ..... Fig. SWJ - 910

Roof Panels
Panels, Roof ..... Fig. SWJ - 1110

Sunroof
Sunroof ..... Fig. SWJ - 1210

Liftgate Panel
Liftgate, Latch and Hinges ..... Fig. SWJ - 1310

Luggage Rack
Roof Rack ..... Fig. SWJ - 1610

Front Floor Pan
Figure SWJ-210

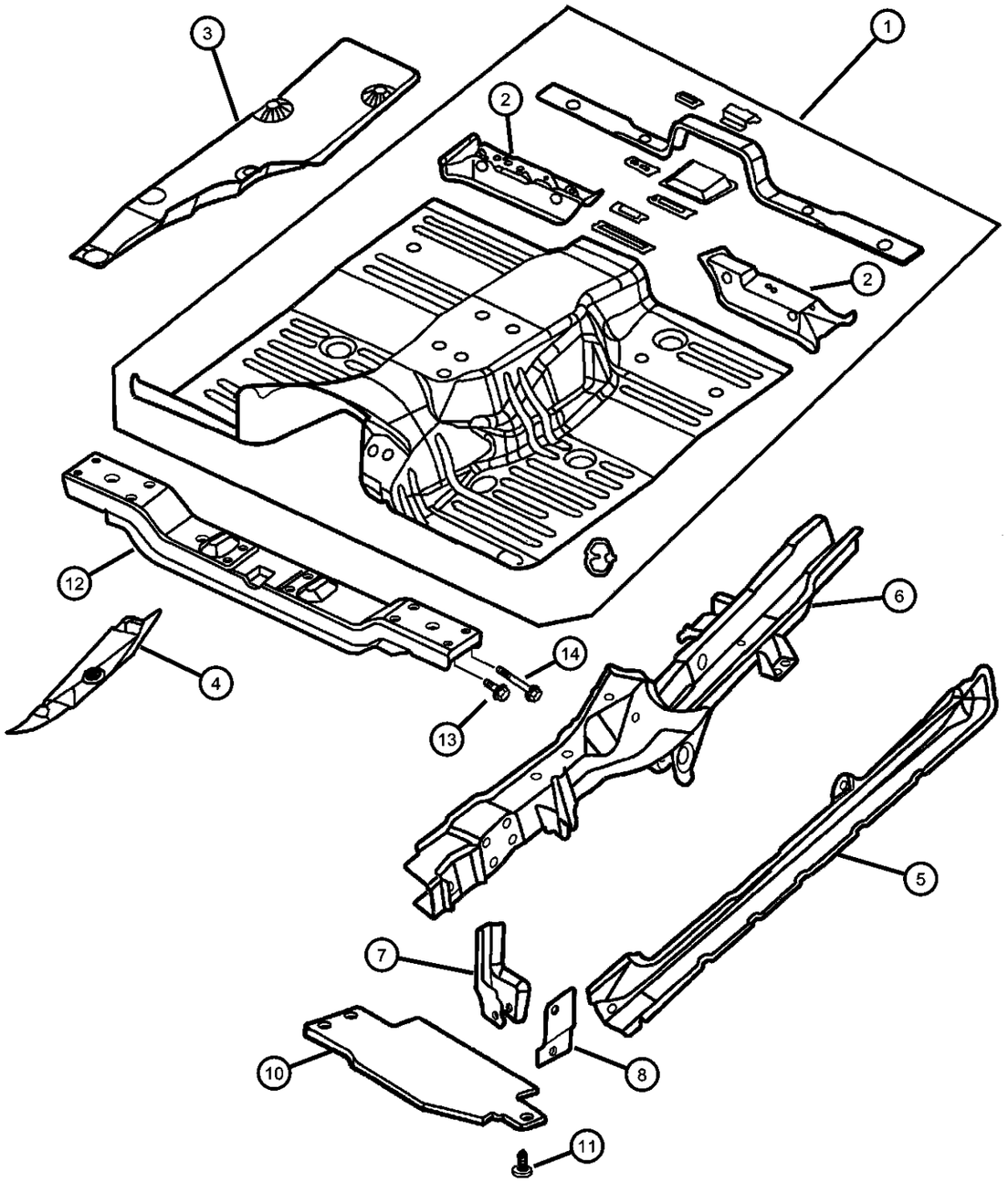

ITEM	PART NUMBER	QTY	LINE	SERIES	BODY	ENGINE	TRANS	TRIM	DESCRIPTION
1	55137188AB	1							PAN, Floor
2									REINFORCEMENT, Front Seat
	55136340AD	1							Right
	55136341AD	1							Left
3	55137210AC	1							SHIELD, Heat
4	55135712AF	1							SHIELD, Heat, Tunnel
5									SILL, Body Side
	55137180AA	1							Right
	55137181AA	1							Left
6									RAIL, Frame Side
	05012524AE	1							Right
	05012525AE	1							Left
7	55136317	1							BRACKET, Track BarInner
8	55136319	1							BRACKET, Track BarOuter
-9	06101916	2							NUT, Hex Weld, M8x1.25
10	55135781	1							SHIELD, Splash
11	06034608	4							PIN, Headline
12	52058940AB	1							CROSSMEMBER, Transmission
13	06506000AA	4							SCREW AND WASHER
14	06505671AA	4							SCREW AND WASHER

GRAND CHEROKEE (WJ)

SERIES	LINE	BODY	ENGINE	TRANSMISSION
H = Laredo	T = JEEP - 2WD	74 = SPORT UTILITY 4-DR	ERH = Engine - 4.0L Power Tech I-6	DGK = 4 Speed Auto, 42RE
M = Sport	J = JEEP - 4WD		EVA = Engine- 4.7L V8 MPI	DGQ = 5 Speed Auto, 45RFE
P = Limited	U = JEEP - 4WD (RHD)		EVC = Engine - 4.7L HO V8 MPI	DG0 = All Automatic Transmissions
S = Overland			ER0 = All 4.0L 6 Cyl. Gas	
			EV0 = All 4.7L Gas	

AR = use ase required - = Non illustrrated part

Center and Rear Floor Pan
Figure SWJ-220

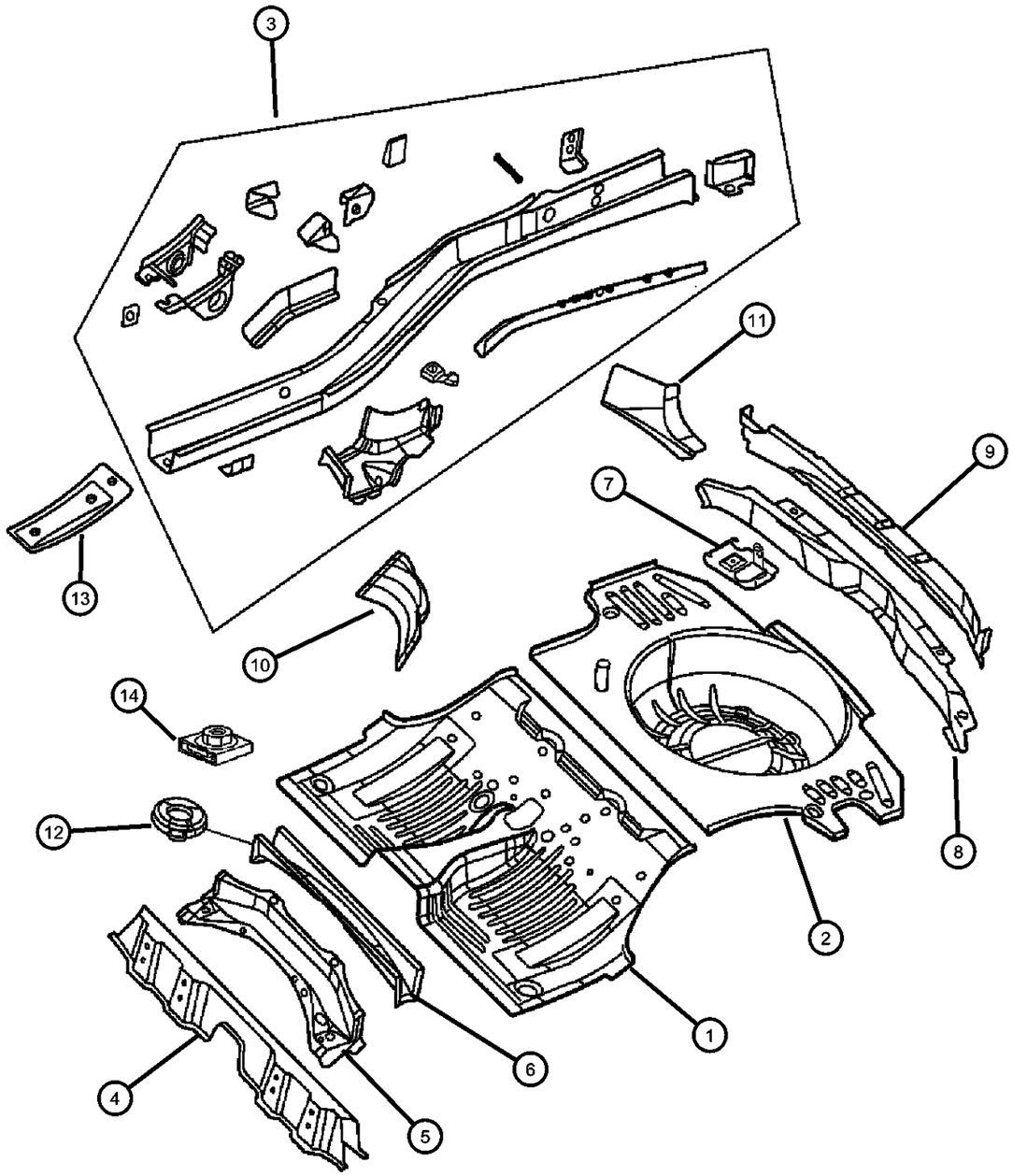

ITEM	PART NUMBER	QTY	LINE	SERIES	BODY	ENGINE	TRANS	TRIM	DESCRIPTION
1	55137230AB	1							PAN, Floor
2	55136377AE	1							PAN, Rear Floor
3									RAIL, Rear Floor Pan Side
	05073930AA	1							Right
	05073931AA	1							Left
4	55136163AF	1							CROSSMEMBER, Rear Floor
5	55137211AD	1							CROSSMEMBER, Rear Floor Pan Front
6	55363143AB	1							CROSSMEMBER, Rear Floor
7	55295800AD	1							BRACKET, Jack
8	55136558AE	1							CROSSMEMBER, Rear Floor
9	55136179AD	1							CROSSMEMBER, Rear Floor
10	55136160AE	1							SHIELD, Fuel Tank
11									GUSSET, Side Member
	55135504AC	1							Right
	55135505AC	1							Left
12	05014781AB	1							GUIDE, Rear Spring, None
13	55137222AA	2							REINFORCEMENT, Rear Floor Pan Rear Rail
14	55136398AB	2							PLATE, Control Arm

GRAND CHEROKEE (WJ)

SERIES	LINE	BODY	ENGINE	TRANSMISSION
H = Laredo	T = JEEP - 2WD	74 = SPORT UTILITY 4-DR	ERH = Engine - 4.0L Power Tech I-6	DGK = 4 Speed Auto, 42RE
M = Sport	J = JEEP - 4WD		EVA = Engine- 4.7L V8 MPI	DGQ = 5 Speed Auto, 45RFE
P = Limited	U = JEEP - 4WD (RHD)		EVC = Engine - 4.7L HO V8 MPI	DG0 = All Automatic Transmissions
S = Overland			ER0 = All 4.0L 6 Cyl. Gas	
			EV0 = All 4.7L Gas	

AR = use ase required - = Non illustrrated part

Plugs
Figure SWJ-310

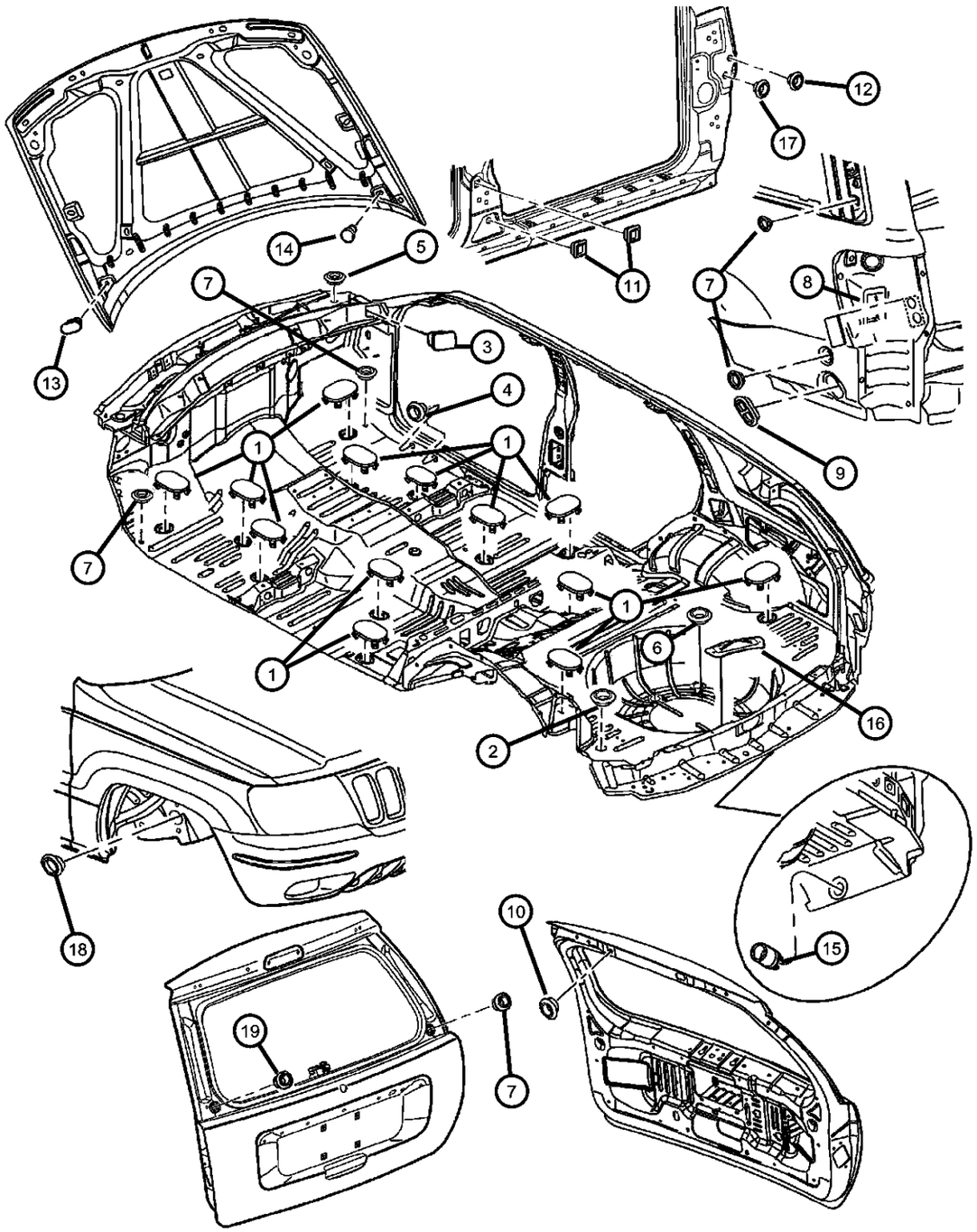

ITEM	PART NUMBER	QTY	LINE	SERIES	BODY	ENGINE	TRANS	TRIM	DESCRIPTION
1	04580343	13							PLUG, Floor Pan
2	02424864	1							PLUG, Body, 1.75 Diameter
3	55136507AB	1							PLUG, BodyCowl Top
4	55257380AA	12							PLUG
5	55136456AB	1							PLUG, Body
6	55136594AA	1							PLUG, Body
7	04440294	7							PLUG, Rear Fascia
8	55136948AA	2							TAPE, Body Side
9	55136562AB	2							PLUG, Body
10	05255217	1							PLUG, Dash Panel
11	55136566AA	4							PLUG, Body
12	55136859AA	2							PLUG
13	55136755AA	1							PLUG, Body
14	55136752AA	1							PLUG, Body
15	55135856AB	2							PLUG, Body
16	55136844AE	1							PLUG, Floor
17	55136860AA	2							PLUG
18	55136945AA	2							PLUG, Body
19	05255216	1							PLUG, Body, .875 Diameter

GRAND CHEROKEE (WJ)

SERIES	LINE	BODY	ENGINE	TRANSMISSION
H = Laredo M = Sport P = Limited S = Overland	T = JEEP - 2WD J = JEEP - 4WD U = JEEP - 4WD (RHD)	74 = SPORT UTILITY 4-DR	ERH = Engine - 4.0L Power Tech I-6 EVA = Engine- 4.7L V8 MPI EVC = Engine - 4.7L HO V8 MPI ER0 = All 4.0L 6 Cyl. Gas EV0 = All 4.7L Gas	DGK = 4 Speed Auto, 42RE DGQ = 5 Speed Auto, 45RFE DG0 = All Automatic Transmissions

Front Fender
Figure SWJ-410

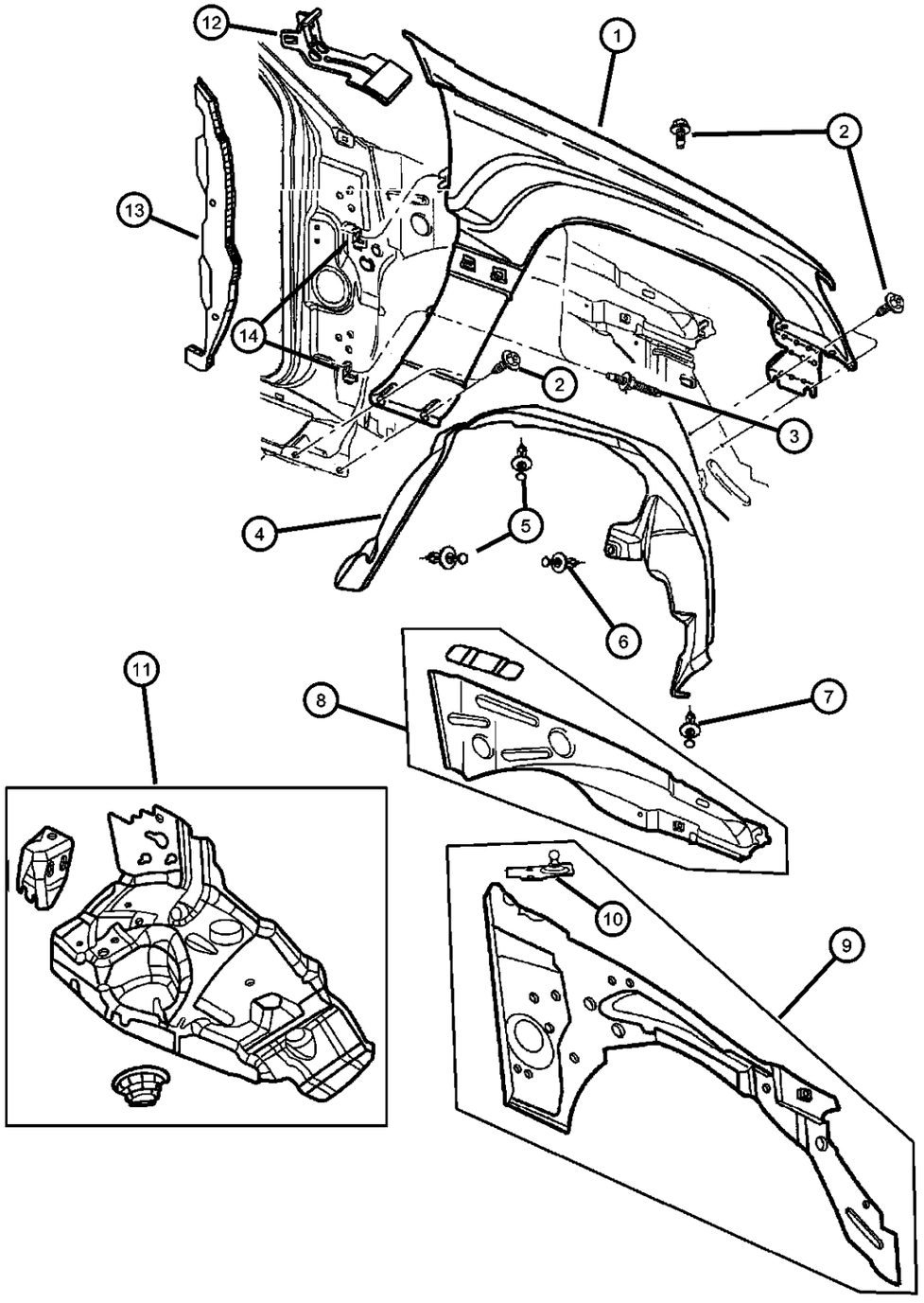

ITEM	PART NUMBER	QTY	LINE	SERIES	BODY	ENGINE	TRANS	TRIM	DESCRIPTION
1									FENDER, Front
	55135900AC	1							Right
	55135901AC	1							Left
2	55135901AC	1							SCREW, M6X1.00X20.00, (NOT SERVICED)
3	55135901AC	1							STUD, Double Ended, M6X1.00X57.00, (NOT SERVICED)
4									LINER, Front Fender
	55136228AB	1							Right
	55136229AB	1							Left
5	06034608	4							PIN, Headline
6	34201631	6							RIVET, M6.25x28 Black
7	06506293AA	12							PIN, Push
8									REINFORCEMENT, Cowl Side
	55136354AH	1							Right
	55136355AH	1							Left
9									PANEL, Cowl
	55135442AE	1							Right
	55135443AE	1							Left
10									BRACKET, Ball to Body
	55136434	1							Right
	55136435	1							Left
11									SUPPORT, Front Suspension
	05017481AC	1							Right
	05017504AD	1							Left
12	55136774AA	2							BRACKET, Fender
13									FILLER, Fender to Wheelhouse
	55135793AC	1							Left
	55135866AC	1							Right
14	55136586AB	4							BRACKET, Fender

GRAND CHEROKEE (WJ)

SERIES	LINE	BODY	ENGINE	TRANSMISSION
H = Laredo M = Sport P = Limited S = Overland	T = JEEP - 2WD J = JEEP - 4WD U = JEEP - 4WD (RHD)	74 = SPORT UTILITY 4-DR	ERH = Engine - 4.0L Power Tech I-6 EVA = Engine- 4.7L V8 MPI EVC = Engine - 4.7L HO V8 MPI ER0 = All 4.0L 6 Cyl. Gas EV0 = All 4.7L Gas	DGK = 4 Speed Auto, 42RE DGQ = 5 Speed Auto, 45RFE DG0 = All Automatic Transmissions

Hood, Latch, Hinges
Figure SWJ-510

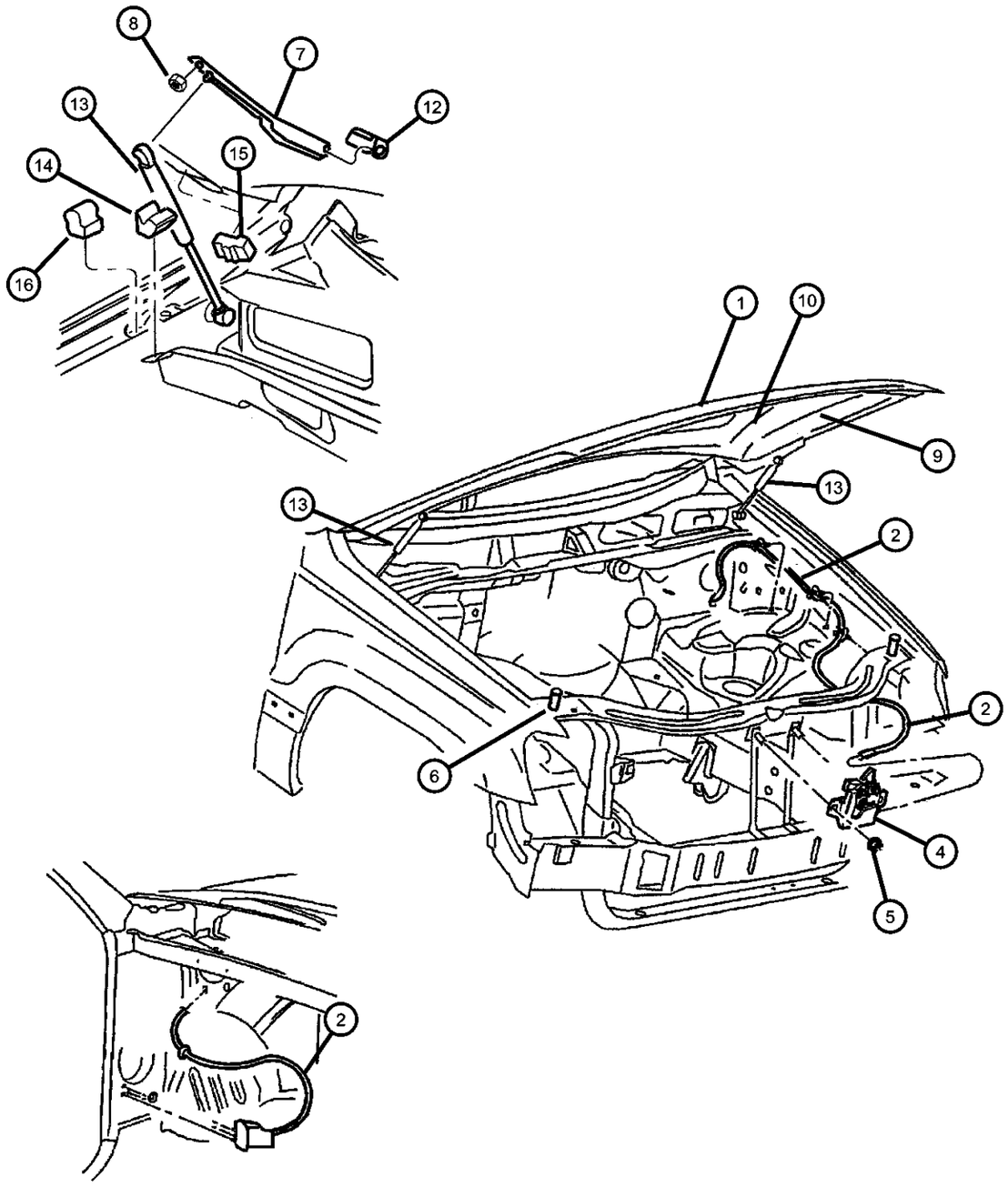

ITEM	PART NUMBER	QTY	LINE	SERIES	BODY	ENGINE	TRANS	TRIM	DESCRIPTION
1	55076470AE	1							HOOD
2	55135532	1							CABLE, Hood Release
-3	06503794	3							CLIP, M6.3x11.2
4	55135600	1							LATCH, Hood
5	06101446	2							NUT AND WASHER
6	04103165	2							BUMPER, Hood
7									HINGE, Hood
	55256196AB	1							Right
	55256197AB	1							Left
8	06503664	4							NUT AND WASHER, Hex Nut-Coned Washer, M6 x 1.00
9	55196298AD	1							INSULATION, Hood
10	55116809AA	1							LABEL, Refrigerant
-11	06003351	12							RETAINER, Hood Insulation, .415x.690
12									COVER, Hinge
	55156110AB	1							Right
	55156111AB	1							Left
13	55136764AA	2							PROP, Hood
	VHWJ9904AA								Mopar Alternative Hood Support Kit (2-hood supports)
14	55363119AA	2							SEAL, HoodLower
15	55136549AA	2							SEAL, HoodUpper
16	55136550AA	2							SEAL, HoodOuter

GRAND CHEROKEE (WJ)

SERIES	LINE	BODY	ENGINE	TRANSMISSION
H = Laredo M = Sport P = Limited S = Overland	T = JEEP - 2WD J = JEEP - 4WD U = JEEP - 4WD (RHD)	74 = SPORT UTILITY 4-DR	ERH = Engine - 4.0L Power Tech I-6 EVA = Engine- 4.7L V8 MPI EVC = Engine - 4.7L HO V8 MPI ER0 = All 4.0L 6 Cyl. Gas EV0 = All 4.7L Gas	DGK = 4 Speed Auto, 42RE DGQ = 5 Speed Auto, 45RFE DG0 = All Automatic Transmissions

AR = use ase required - = Non illustrrated part

Panels, Cowl and Dash
Figure SWJ-610

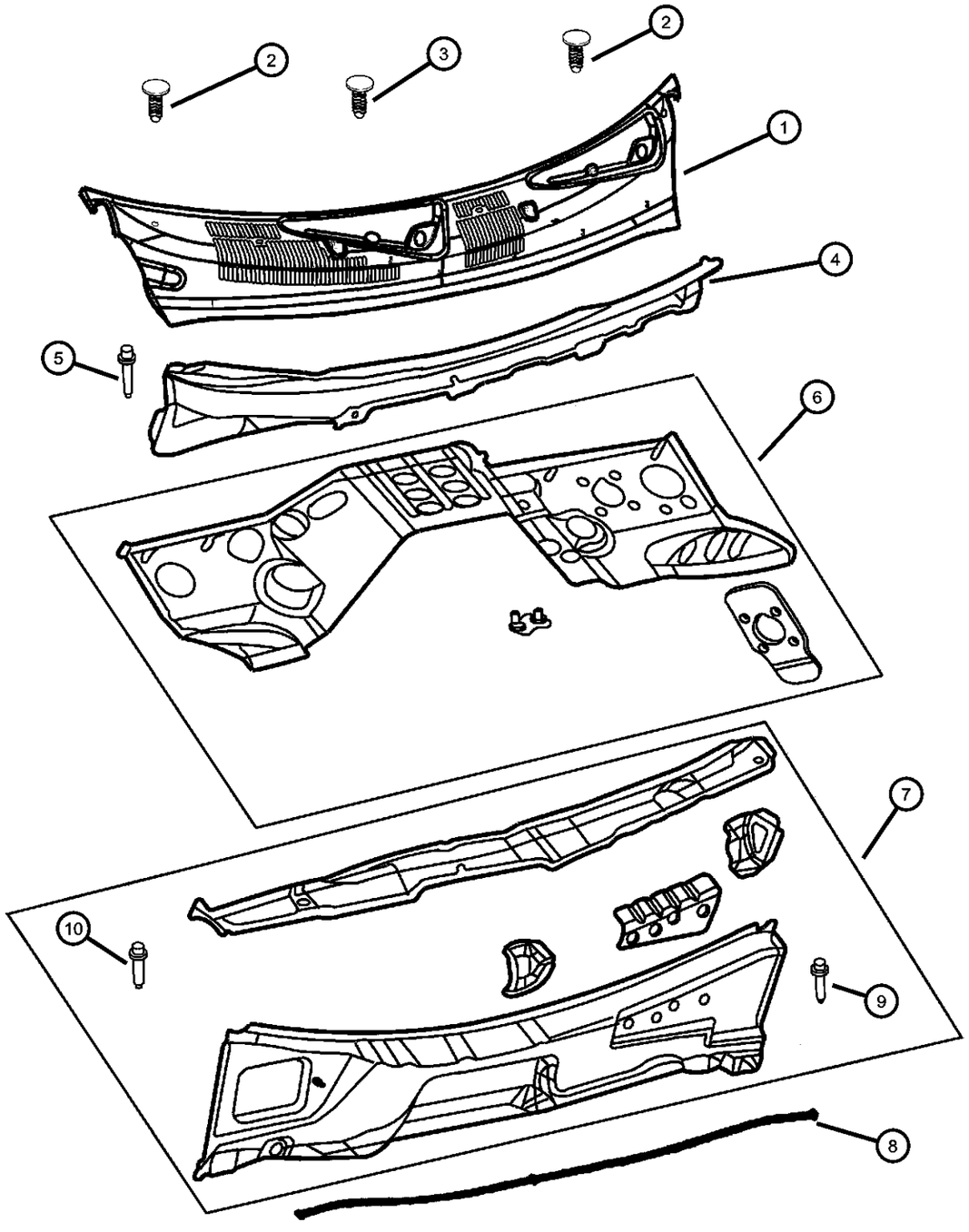

ITEM	PART NUMBER	QTY	LINE	SERIES	BODY	ENGINE	TRANS	TRIM	DESCRIPTION
1	55155355AB	1							COVER, Cowl Grille
2	06505319AA	4							NUT, M6x1.00
3	06503339	2							NUT, Plastic
4	55135369AC	1							PANEL, Cowl Top
5	06505511AA	4							STUD
6	55135358AC	1							PANEL, Dash
7	55135451AD	1							PANEL, Cowl And Plenum
8	55135392AB	1							SEAL, Hood To Plenum
9	06504758	3							STUD, M8x
10	06504952AA	3							STUD

GRAND CHEROKEE (WJ)

SERIES	LINE	BODY	ENGINE	TRANSMISSION
H = Laredo	T = JEEP - 2WD	74 = SPORT UTILITY 4-DR	ERH = Engine - 4.0L Power Tech I-6	DGK = 4 Speed Auto, 42RE
M = Sport	J = JEEP - 4WD		EVA = Engine- 4.7L V8 MPI	DGQ = 5 Speed Auto, 45RFE
P = Limited	U = JEEP - 4WD (RHD)		EVC = Engine - 4.7L HO V8 MPI	DG0 = All Automatic Transmissions
S = Overland			ER0 = All 4.0L 6 Cyl. Gas	
			EV0 = All 4.7L Gas	

AR = use ase required - = Non illustrrated part

Insulation, Dash And Cowl
Figure SWJ-620

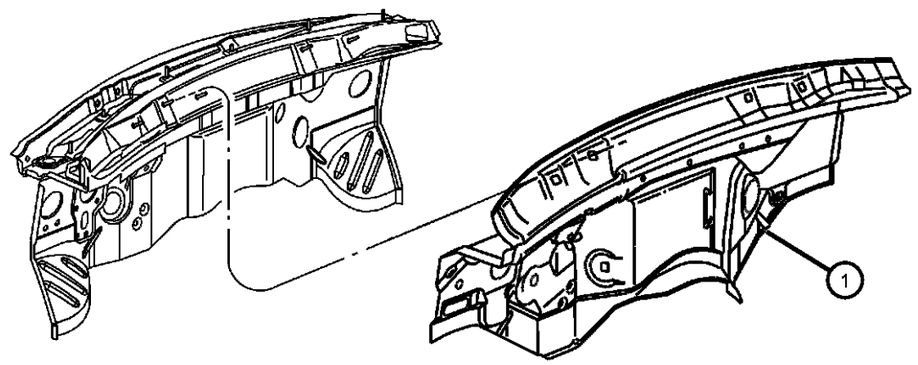

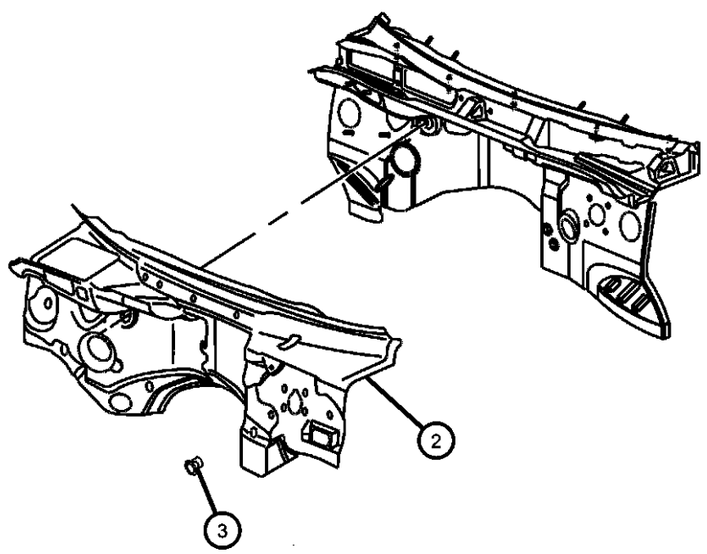

ITEM	PART NUMBER	QTY	LINE	SERIES	BODY	ENGINE	TRANS	TRIM	DESCRIPTION
1	55196892AB	1							INSULATION, Dash Panel
2	55196836AB	1							INSULATION, Dash Panel
3	06503274	3							NUT, Push On

GRAND CHEROKEE (WJ)

SERIES	LINE	BODY	ENGINE	TRANSMISSION
H = Laredo M = Sport P = Limited S = Overland	T = JEEP - 2WD J = JEEP - 4WD U = JEEP - 4WD (RHD)	74 = SPORT UTILITY 4-DR	ERH = Engine - 4.0L Power Tech I-6 EVA = Engine- 4.7L V8 MPI EVC = Engine - 4.7L HO V8 MPI ER0 = All 4.0L 6 Cyl. Gas EV0 = All 4.7L Gas	DGK = 4 Speed Auto, 42RE DGQ = 5 Speed Auto, 45RFE DG0 = All Automatic Transmissions

AR = use ase required - = Non illustrrated part

Glass, Windshield, Backlite, Quarter Window, Rear View Mirror
Figure SWJ-710

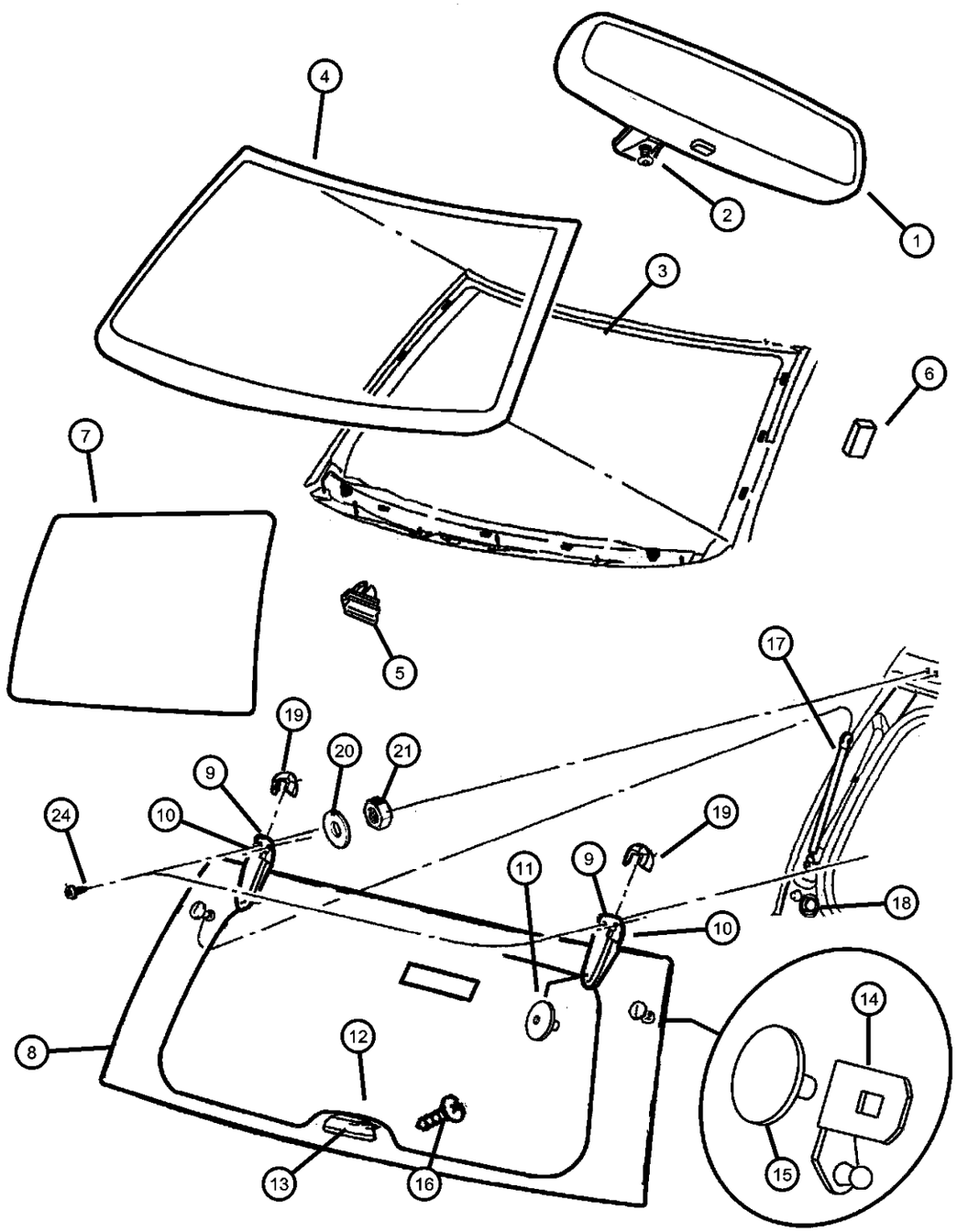

ITEM	PART NUMBER	QTY	LINE	SERIES	BODY	ENGINE	TRANS	TRIM	DESCRIPTION
1									MIRROR, Inside Rear View
	04805332AB	1							Prismatic
	55155380AB	1							Automatic
2	06031094	1							SCREW, Pan Head Tapping, .19-16x.375
3	55076401	1							BUTTON, Rear View Mirror
4									WINDSHIELD
	05017527AA	1							25-Lite Pack
	05080595AA	1							With Rain Sensor, 25-Lite Pack
5	55028214	9							SPACER, Windshield
6	55275388AC	2							SPACER, Windshield
7									GLASS, Quarter Window
	55135808AD	1							Right
	55135809AD	1							Left
8	55136980AB	1							GLASS, Liftgate Flipper
9									HINGE, Liftglass
	05019418AA	1							Right
	05019419AA	1							Left
10	55075164	4							GASKET, Liftgate Hinge
11	06502900	2							SCREW, Special Head, M6x1x12.7, Hinge to Glass
12	55136045	1							GASKET, Liftgate Handle
13	55136048	1							HANDLE, Flipper Window
14									BALL STUD, Liftgate Glass
	55136968AA	1							Right
	55136969AA	1							Left
15	06506200AA	2							FASTENER
16	06035479	2							SCREW AND WASHER
17	55136965AA	2							GAS CYLINDER, Liftgate Glass
18	55136845AA	2							BUMPER, Liftgate Glass
19									COVER, Hinge
	04717486AB	1							Right
	04717487AB	1							Left
20	55295914	4							GASKET, Ball Stud

GRAND CHEROKEE (WJ)

SERIES	LINE	BODY	ENGINE	TRANSMISSION
H = Laredo M = Sport P = Limited S = Overland	T = JEEP - 2WD J = JEEP - 4WD U = JEEP - 4WD (RHD)	74 = SPORT UTILITY 4-DR	ERH = Engine - 4.0L Power Tech I-6 EVA = Engine- 4.7L V8 MPI EVC = Engine - 4.7L HO V8 MPI ER0 = All 4.0L 6 Cyl. Gas EV0 = All 4.7L Gas	DGK = 4 Speed Auto, 42RE DGQ = 5 Speed Auto, 45RFE DG0 = All Automatic Transmissions

AR = use ase required - = Non illustrrated part

Glass, Windshield, Backlite, Quarter Window, Rear View Mirror
Figure SWJ-710

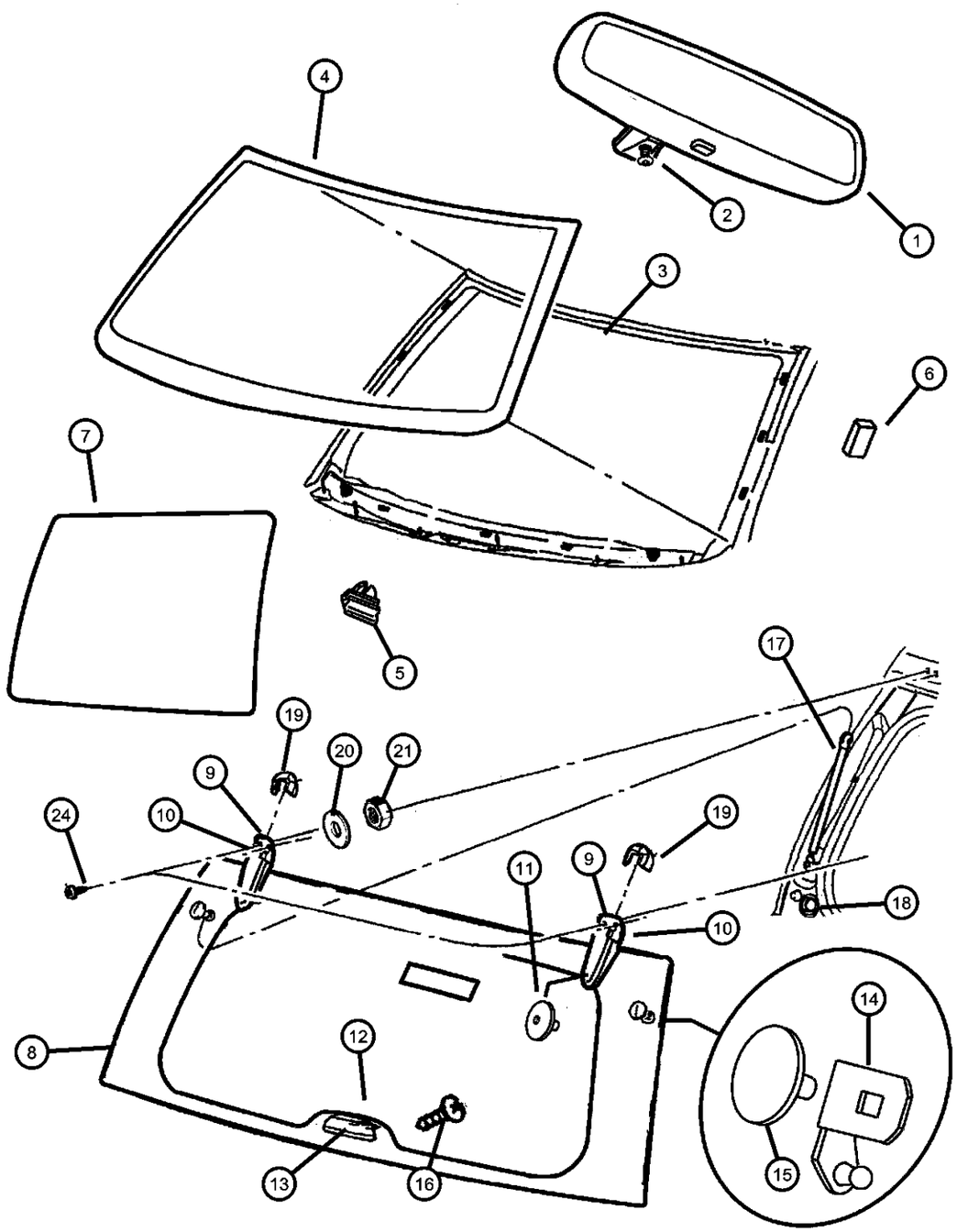

ITEM	PART NUMBER	QTY	LINE	SERIES	BODY	ENGINE	TRANS	TRIM	DESCRIPTION
21	06504513	1							NUT AND WASHER, Hex Nut-Coned Washer, M6 x 1.00
-22	55136044	1							STRIKER, Liftgate Glass
-23	55076299	2							CAP, Lock Cylinder, Locks Prop Rod
24	06505440AA	4							SCREW

GRAND CHEROKEE (WJ)

SERIES	LINE	BODY	ENGINE	TRANSMISSION
H = Laredo M = Sport P = Limited S = Overland	T = JEEP - 2WD J = JEEP - 4WD U = JEEP - 4WD (RHD)	74 = SPORT UTILITY 4-DR	ERH = Engine - 4.0L Power Tech I-6 EVA = Engine- 4.7L V8 MPI EVC = Engine - 4.7L HO V8 MPI ER0 = All 4.0L 6 Cyl. Gas EV0 = All 4.7L Gas	DGK = 4 Speed Auto, 42RE DGQ = 5 Speed Auto, 45RFE DG0 = All Automatic Transmissions

AR = use ase required - = Non illustrrated part

Panels, Body Side
Figure SWJ-810

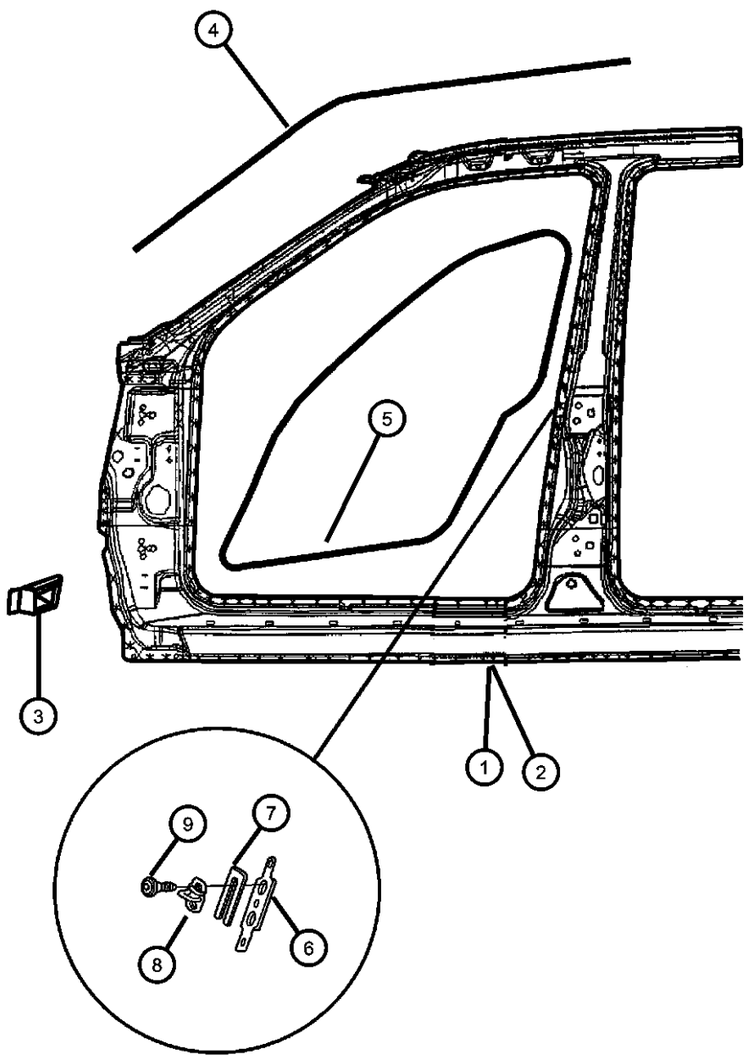

ITEM	PART NUMBER	QTY	LINE	SERIES	BODY	ENGINE	TRANS	TRIM	DESCRIPTION
1									PANEL, Body Side Aperture Front, Complete
	05083300AA	1							Right
	05083301AA	1							Left
2									PANEL, Body Side Aperture, Outer
	05083360AA	1							Right
	05083361AA	1							Left
3									TAPPING PLATE, Door Hinge, Also serviced in Item #1
	55136436AB	1							Right
	55136437AB	1							Left
4									SEAL, Body Side
	55135869AC	1							Upper Right
	55135872AC	1							Upper Left
5									SEAL, Front Door
	55135918AG	1							Right
	55135919AG	1							Left
6	55135503AB	2							TAPPING PLATE, Striker
7	04520289	AR							SPACER, Door Latch Striker
8	04780607AA	2							STRIKER, Door
9	06506749AA	4							SCREW, 6 Lobed

GRAND CHEROKEE (WJ)

SERIES	LINE	BODY	ENGINE	TRANSMISSION
H = Laredo M = Sport P = Limited S = Overland	T = JEEP - 2WD J = JEEP - 4WD U = JEEP - 4WD (RHD)	74 = SPORT UTILITY 4-DR	ERH = Engine - 4.0L Power Tech I-6 EVA = Engine- 4.7L V8 MPI EVC = Engine - 4.7L HO V8 MPI ER0 = All 4.0L 6 Cyl. Gas EV0 = All 4.7L Gas	DGK = 4 Speed Auto, 42RE DGQ = 5 Speed Auto, 45RFE DG0 = All Automatic Transmissions

AR = use ase required - = Non illustrrated part

Panels, Rear Quarter
Figure SWJ-910

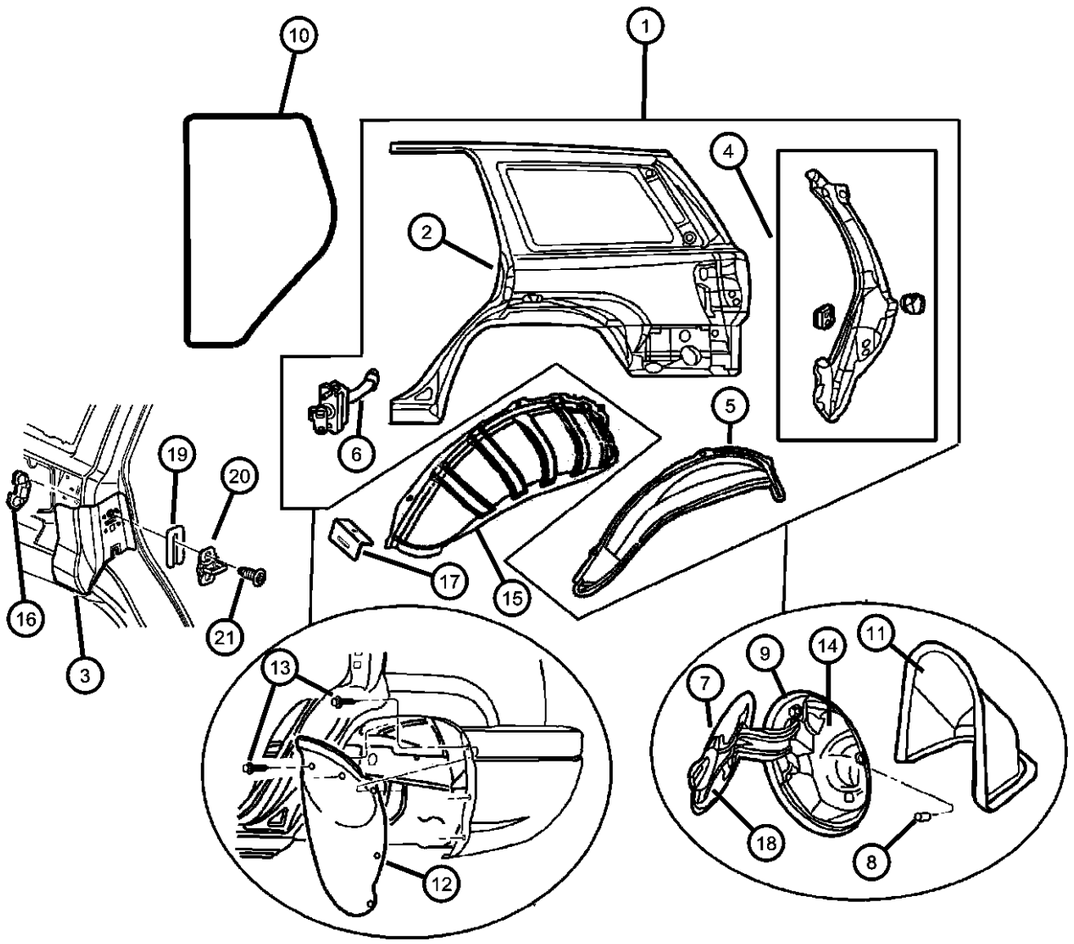

ITEM	PART NUMBER	QTY	LINE	SERIES	BODY	ENGINE	TRANS	TRIM	DESCRIPTION
1									PANEL, Body Side Aperture Rear, Complete, Includes Tailamp Pocket
	05083110AA	1							Right
	05083111AA	1							Left
2									PANEL, Quarter, Outer Only, Without Tailamp Pocket
	05017866AB	1							Right
	05017867AB	1							Left
3									REINFORCEMENT, Door Striker
	55135508AC	1							Right
	55135509AC	1							Left
4									TROUGH, Liftgate Opening
	55135428AC	1							Right
	55135429AC	1							Left
5									PANEL, Rear Wheelhouse
	55136546AB	1							Right
	55136547AB	1							Left
6									CHECK, Rear Door
	55135658AB	1							Right
	55135659AB	1							Left
7	55135514AB	1							DOOR, Fuel Fill
8	55135519AB	2							BUMPER, Fuel Door
9	06504946AA	2							SCREW, Hex Flange Head, M6x1.0x16.0
10									SEAL, Rear Door
	55135958AG	1							Right
	55135959AG	1							Left
11									REINFORCEMENT, Fuel Filler Door
	55136178AB	1							Inner
	55136683AA	1							Outer
12									SHIELD, Splash
	55136500AD	1							Right
	55136501AD	1							Left
13	34201631	4							RIVET, M6.25x28 Black
14	55135511AB	1							HOUSING, Fuel Filler

GRAND CHEROKEE (WJ)

SERIES	LINE	BODY	ENGINE	TRANSMISSION
H = Laredo M = Sport P = Limited S = Overland	T = JEEP - 2WD J = JEEP - 4WD U = JEEP - 4WD (RHD)	74 = SPORT UTILITY 4-DR	ERH = Engine - 4.0L Power Tech I-6 EVA = Engine- 4.7L V8 MPI EVC = Engine - 4.7L HO V8 MPI ER0 = All 4.0L 6 Cyl. Gas EV0 = All 4.7L Gas	DGK = 4 Speed Auto, 42RE DGQ = 5 Speed Auto, 45RFE DG0 = All Automatic Transmissions

Panels, Rear Quarter
Figure SWJ-910

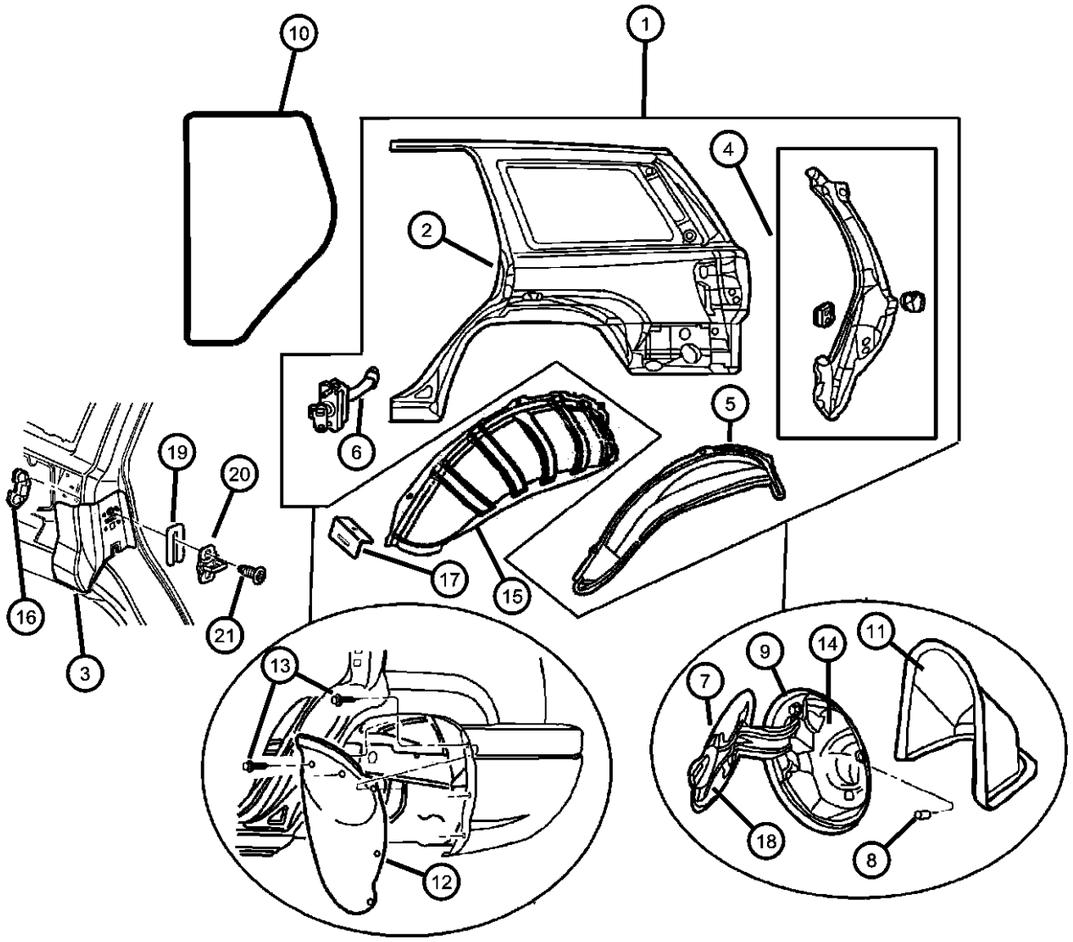

ITEM	PART NUMBER	QTY	LINE	SERIES	BODY	ENGINE	TRANS	TRIM	DESCRIPTION
15									WHEELHOUSE, Rear Inner
	55136996AA	1							Right
	55136997AA	1							Left
16	04674669	2							PLATE, Liftgate Striker
17	55136998AA	2							BRACKET, Wheel House, Trim Panel Attach
18	55295856AC	2							LABEL, Fuel
19									SPACER, Door Latch Striker
	04520289	AR							3.75 Thick
	55075483	AR							2.0 to 2.5 Thick
20	04780607AA	2							STRIKER, Door
21	06504573	4							SCREW, Oval Head, SCREW

GRAND CHEROKEE (WJ)

SERIES	LINE	BODY	ENGINE	TRANSMISSION
H = Laredo M = Sport P = Limited S = Overland	T = JEEP - 2WD J = JEEP - 4WD U = JEEP - 4WD (RHD)	74 = SPORT UTILITY 4-DR	ERH = Engine - 4.0L Power Tech I-6 EVA = Engine- 4.7L V8 MPI EVC = Engine - 4.7L HO V8 MPI ER0 = All 4.0L 6 Cyl. Gas EV0 = All 4.7L Gas	DGK = 4 Speed Auto, 42RE DGQ = 5 Speed Auto, 45RFE DG0 = All Automatic Transmissions

AR = use ase required - = Non illustrrated part

Panels, Roof
Figure SWJ-1110

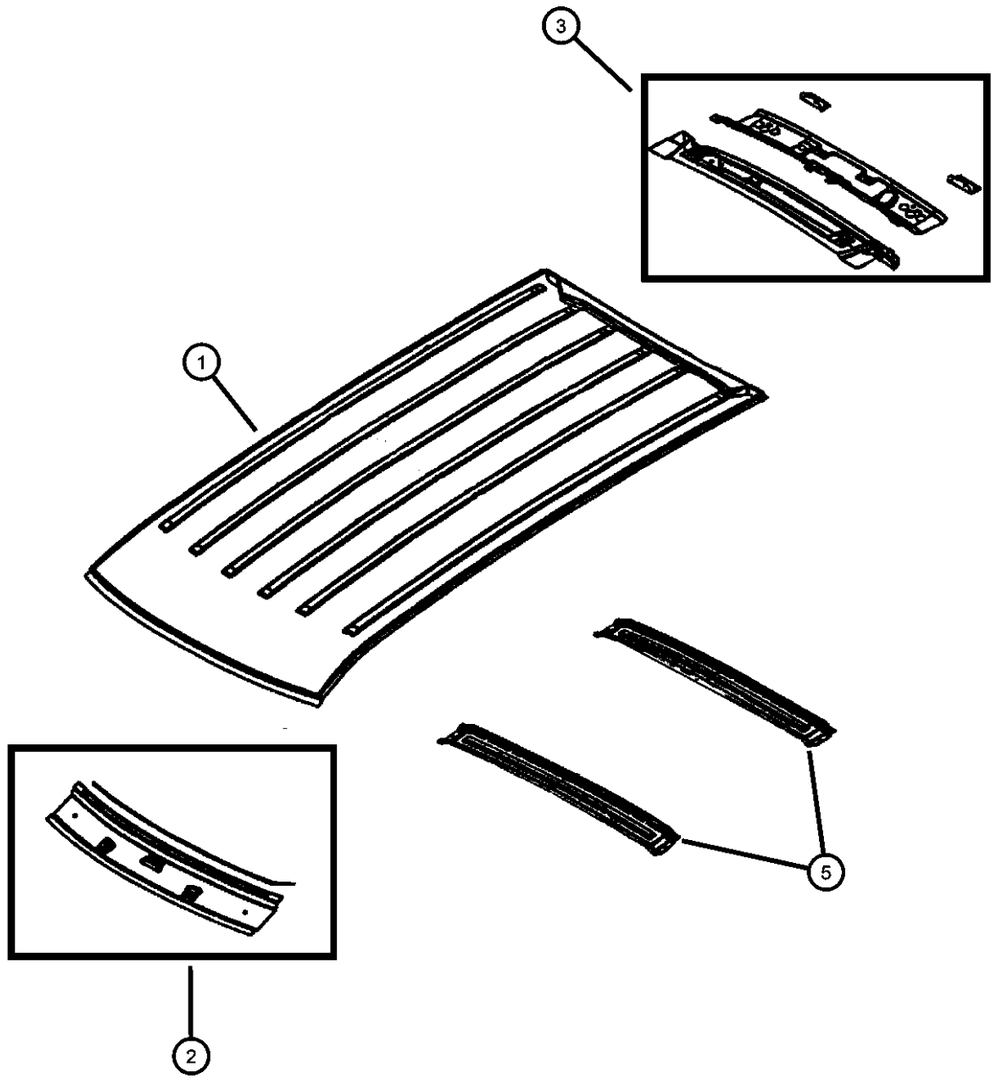

ITEM	PART NUMBER	QTY	LINE	SERIES	BODY	ENGINE	TRANS	TRIM	DESCRIPTION
1									PANEL, Roof
	55135404AC	1							Without Sunroof
	55135461AC	1							With Sunroof
2	55135545AB	1							HEADER, Roof FrontFront
3	55135523AD	1							HEADER, PanelRear
-4									PIN, Headline
	06034608	4							Roof Bow Attach
		2							Front Header Attach
		2							Rear Header Attach
5	55135424AD	2							BOW, Roof

GRAND CHEROKEE (WJ)

SERIES	LINE	BODY	ENGINE	TRANSMISSION
H = Laredo M = Sport P = Limited S = Overland	T = JEEP - 2WD J = JEEP - 4WD U = JEEP - 4WD (RHD)	74 = SPORT UTILITY 4-DR	ERH = Engine - 4.0L Power Tech I-6 EVA = Engine- 4.7L V8 MPI EVC = Engine - 4.7L HO V8 MPI ER0 = All 4.0L 6 Cyl. Gas EV0 = All 4.7L Gas	DGK = 4 Speed Auto, 42RE DGQ = 5 Speed Auto, 45RFE DG0 = All Automatic Transmissions

Sunroof
Figure SWJ-1210

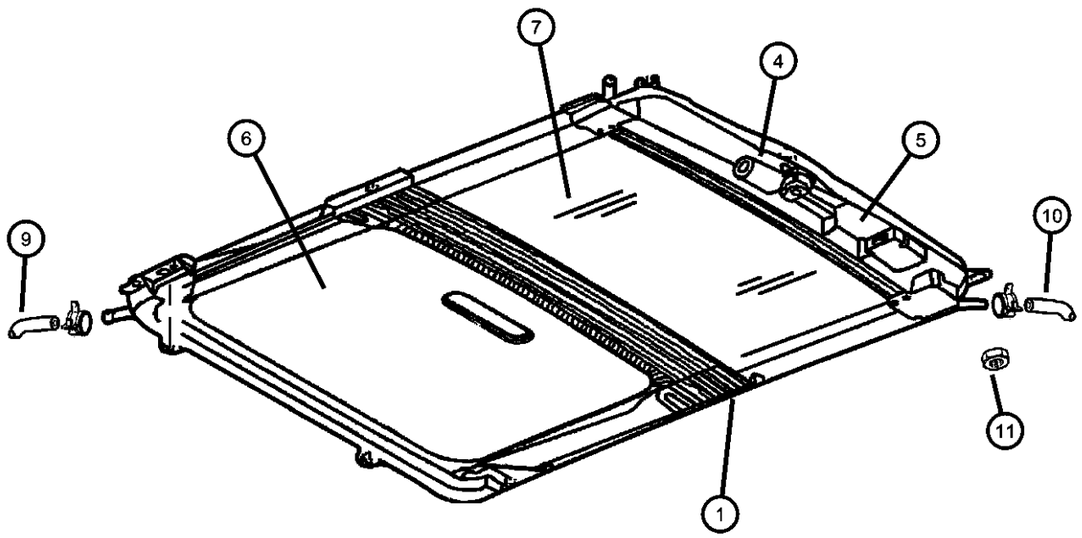

ITEM	PART NUMBER	QTY	LINE	SERIES	BODY	ENGINE	TRANS	TRIM	DESCRIPTION
1	05012772AA	1							MODULE, Sunroof
-2	05012765AA	1							DEFLECTOR, Sunroof Wind
-3	05012769AA	1							CHANNEL, Sunroof Drain
4	05012768AA	1							MOTOR, Sunroof
5	05012771AB	1							CONTROL UNIT, Sunroof
6									SUNSHADE, Sunroof
	5EZ11TL2AB	1							[DV, L5], Up to 5/22/02
	5EZ11XDBAB	1							[DB]
	5EZ11XT5AB	1							[T5], Up to 5/22/02
	5EZ11TL2AE	1							[DV, L5, T5], After 5/22/02
7	55135858AB	1							GLASS, Sunroof
-8	05012773AA	1							GUIDE, Sunroof Lid
9									HOSE, Sunroof Drain
	55136967AD	1							Front Left
	55137396AA	1							Front Right
10	55137274AA	2							HOSE, Sunroof DrainRear
11	06503504	2							NUT AND WASHER, Hex, M6x1
-12	04814215	1							GROMMET, Tube
-13	06502843	9							NUT AND WASHER, Hex Nut-Coned Washer, M6 x 1.00, Sunroof to Roof Reinforcement Attach
-14	04805378AB	2							CLIP, Tube, Sunroof Drain Hose Attach

GRAND CHEROKEE (WJ)

SERIES	LINE	BODY	ENGINE	TRANSMISSION
H = Laredo M = Sport P = Limited S = Overland	T = JEEP - 2WD J = JEEP - 4WD U = JEEP - 4WD (RHD)	74 = SPORT UTILITY 4-DR	ERH = Engine - 4.0L Power Tech I-6 EVA = Engine- 4.7L V8 MPI EVC = Engine - 4.7L HO V8 MPI ER0 = All 4.0L 6 Cyl. Gas EV0 = All 4.7L Gas	DGK = 4 Speed Auto, 42RE DGQ = 5 Speed Auto, 45RFE DG0 = All Automatic Transmissions

Liftgate, Latch and Hinges
Figure SWJ-1310

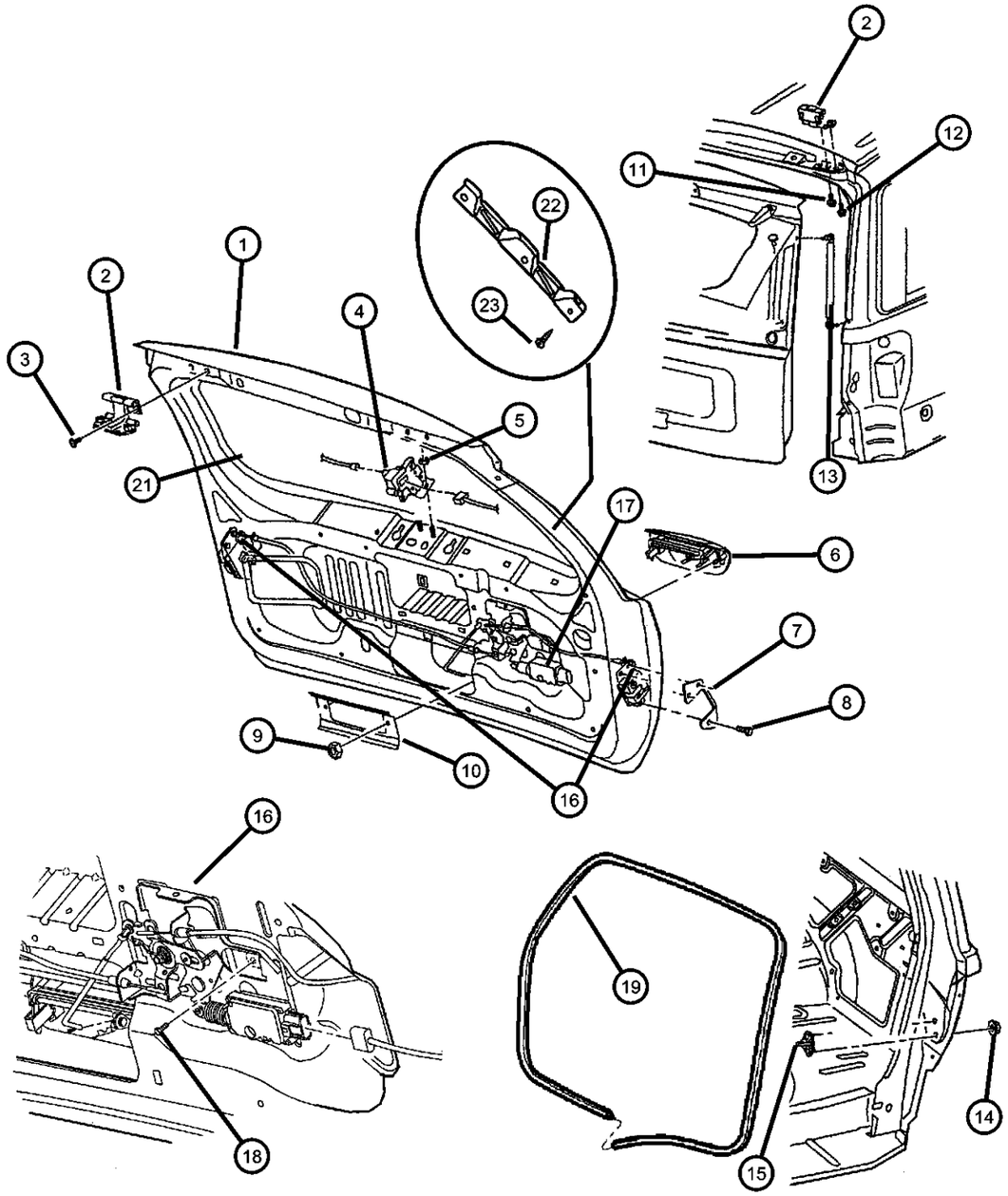

ITEM	PART NUMBER	QTY	LINE	SERIES	BODY	ENGINE	TRANS	TRIM	DESCRIPTION
1	55256177AC	1							PANEL, Liftgate
2	55257015AB	2							HINGE, Liftgate
3	55257015AB	2							SCREW AND WASHER, Hex Head, M8-1.25x30, (NOT SERVICED)
4	55136740AA	1							LATCH, Liftgate Glass
5	06503102	2							NUT AND WASHER, Hex Nut-Coned Washer, M6 x 1.00
6									HANDLE, Liftgate
	55136699AC	1							Black, Laredo
	5GD47DX8AC	1							[X8], Limited
		1							[X8], Laredo
	5GD47SW1AC	1							[W1], Limited
		1							[W1], Laredo
	5GD47WB-TAC	1							[BT], Limited
		1							[BT], Laredo
	5GD47WELAC	1							[EL], Limited
		1							[EL], Overland
		1							[EL], Laredo
	5GD47WS-BAC	1							[SB], Overland
	5GD47AXRAC	1							[XR], Limited
	5GD47YFFAC	1							[FF], Limited
	5GD47YJRAC	1							[JR], Limited
		1							[JR], Overland
		1							[JR], Laredo
	5GD47YUBAC	1							[UB], Limited
		1							[SB], Limited
	5GD47XBQAC	1							[BQ], Limited
		1							[BQ], Laredo
	5GD47XR-VAC	1							[RV], Limited
		1							[RV], Laredo
	5GD47XS5AC	1							[S5], Limited
		1							[S5], Overland
		1							[S5], Laredo

GRAND CHEROKEE (WJ)

SERIES	LINE	BODY	ENGINE	TRANSMISSION
H = Laredo M = Sport P = Limited S = Overland	T = JEEP - 2WD J = JEEP - 4WD U = JEEP - 4WD (RHD)	74 = SPORT UTILITY 4-DR	ERH = Engine - 4.0L Power Tech I-6 EVA = Engine- 4.7L V8 MPI EVC = Engine - 4.7L HO V8 MPI ER0 = All 4.0L 6 Cyl. Gas EV0 = All 4.7L Gas	DGK = 4 Speed Auto, 42RE DGQ = 5 Speed Auto, 45RFE DG0 = All Automatic Transmissions

AR = use ase required - = Non illustrrated part

Liftgate, Latch and Hinges
Figure SWJ-1310

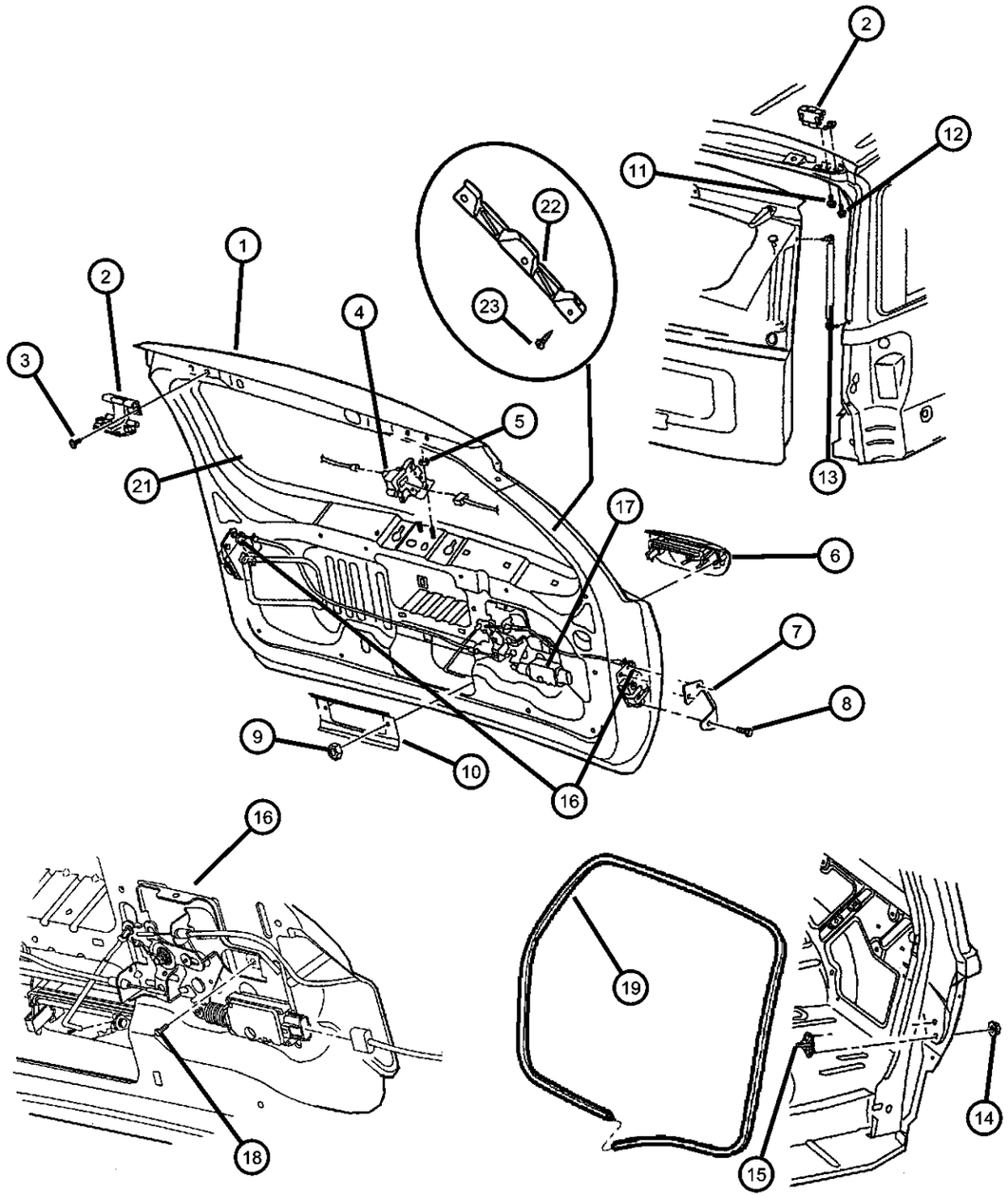

ITEM	PART NUMBER	QTY	LINE	SERIES	BODY	ENGINE	TRANS	TRIM	DESCRIPTION
		1							[UB], Laredo
	5GD47ZDRAC	1							[DR], Limited
		1							[DR], Overland
		1							[DR], Laredo
7									PLATE, Liftgate Latch
	55136910AB	1							Right
	55136911AB	1							Left
8	06503259	6							SCREW, Tapping, M6x1x20
9	06505316AA	2							NUT
10	55136696AB	1							BRACKET, Outside Door Handle
11	06505337AA	2							SCREW AND WASHER, Hex Head
12	06507002AA	4							SCREW AND WASHER, Hex Head, M8x1.25x25
13									SUPPORT, Liftgate Strut
	55137022AB	1							Right
	55137023AB	1							Left
14	06503533	4							SCREW, Flange Head, M8x1.25x26
15									STRIKER, Liftgate
	55136912AB	1							Right
	55136913AB	1							Left
16	55136742AC	1							LATCH, Liftgate, Includes Center, Left & Right
17	05018479AA	1							ACTUATOR, Decklid Lock
18	06501979	1							SCREW AND WASHER, Hex Head, M6x1x17
19	55135388AC	1							SEAL, Liftgate
-20	06505435AA	4							NUT, Plastic, License Plate Ataching
21	55363160AB	1							WEATHERSTRIP, Liftgate Glass
22									BRACKET, Liftgate
	55136654AC	1							Right
	55136655AB	1							Left
23	06032723	6							SCREW, Self Tapping, M4.2x1.69x19.05

GRAND CHEROKEE (WJ)

SERIES	LINE	BODY	ENGINE	TRANSMISSION
H = Laredo M = Sport P = Limited S = Overland	T = JEEP - 2WD J = JEEP - 4WD U = JEEP - 4WD (RHD)	74 = SPORT UTILITY 4-DR	ERH = Engine - 4.0L Power Tech I-6 EVA = Engine- 4.7L V8 MPI EVC = Engine - 4.7L HO V8 MPI ER0 = All 4.0L 6 Cyl. Gas EV0 = All 4.7L Gas	DGK = 4 Speed Auto, 42RE DGQ = 5 Speed Auto, 45RFE DG0 = All Automatic Transmissions

Roof Rack
Figure SWJ-1610

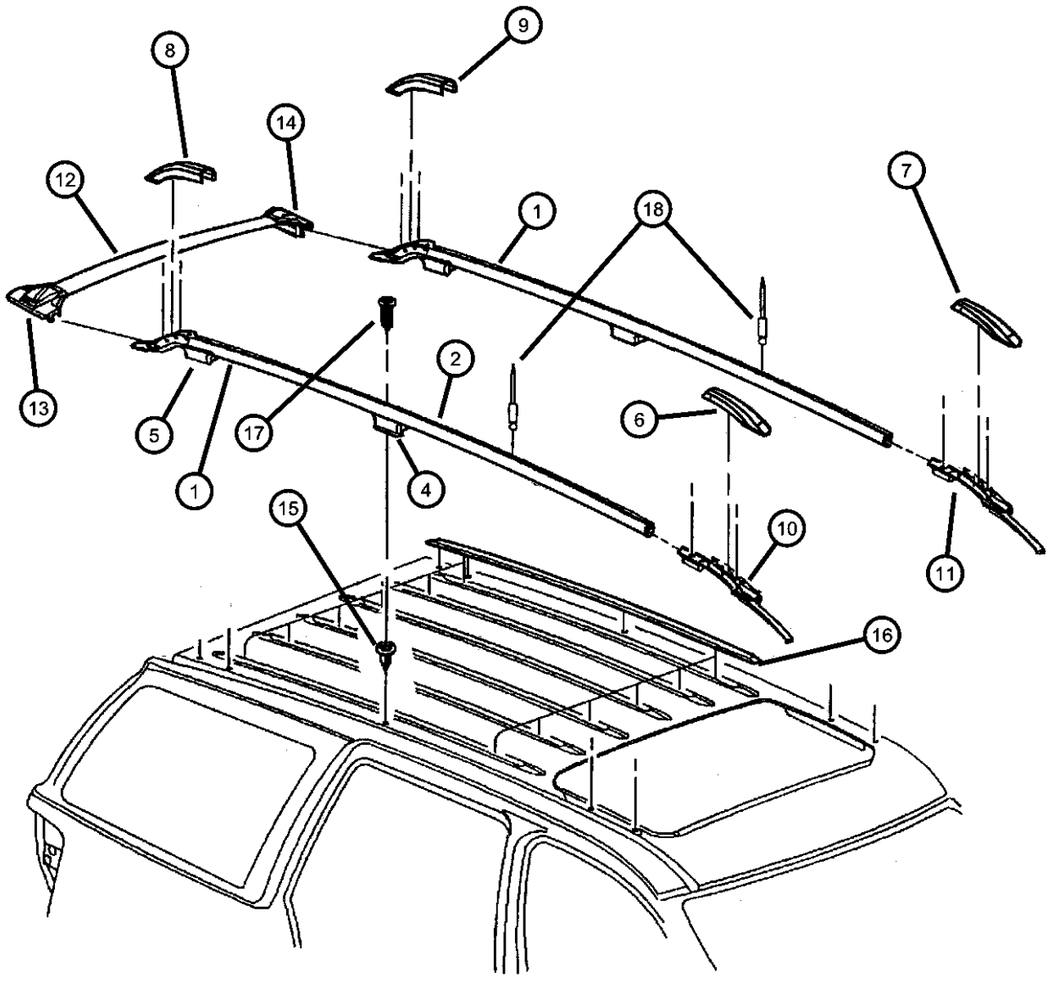

ITEM	PART NUMBER	QTY	LINE	SERIES	BODY	ENGINE	TRANS	TRIM	DESCRIPTION
1									RAIL, Luggage Rack Side
	55136848AB	1							Right
	55136849AB	1							Left
2									SPACER
	55136838AA	1							Right
	55136839AA	1							Left
-3	55363383AA	2							GASKET
4									SUPPORT, Luggage Rack
	55136854AA	1							Right, Center
	55136855AA	1							Left, Center
5									SUPPORT, Roof Rack
	55136836AA	1							Right Rear
	55136837AA	1							Left Rear
6	55135970AB	1							CAP, Side RailFront, Right
7	55135971AB	1							CAP, Side RailFront, Left
8	55136576AA	1							CAP, Side RailRear, Right
9	55136577AA	1							CAP, Side RailRear, Left
10	55136952AC	1							SUPPORT, Roof RackFront, Right
11	55136953AC	1							SUPPORT, Roof RackFront, Left
12	05017213AA	2							CROSS RAIL, Roof Rack
13	55136850AA	2							STANCHION, LUGG RACK CROSS RAILRight
14	55136851AA	2							STANCHION, LUGG RACK CROSS RAILLeft
15	06506104AA	10							NUT
16	55135987AB	6							SKID STRIP, Roof Rack
17	06506455AA	8							SCREW, Pan Head
18	06506455AA	8							RIVET, [.125x.283], (NOT SERVICED)

GRAND CHEROKEE (WJ)

SERIES	LINE	BODY	ENGINE	TRANSMISSION
H = Laredo M = Sport P = Limited S = Overland	T = JEEP - 2WD J = JEEP - 4WD U = JEEP - 4WD (RHD)	74 = SPORT UTILITY 4-DR	ERH = Engine - 4.0L Power Tech I-6 EVA = Engine- 4.7L V8 MPI EVC = Engine - 4.7L HO V8 MPI ER0 = All 4.0L 6 Cyl. Gas EV0 = All 4.7L Gas	DGK = 4 Speed Auto, 42RE DGQ = 5 Speed Auto, 45RFE DG0 = All Automatic Transmissions

AR = use ase required - = Non illustrrated part