VIN PLATE DECODING INFORMATION

1	2	3	4	5	6	7	8	9	10	11	12 thru 17
Country	**Make**	**Vehicle Type**	**GVWR & Pass. Safety**	**Line**	**Series**	**Body Style**	**Engine**	**Check Digit**	**Model Year**	**Assy. Plant**	**Sequence No.**

The following table interprets the VIN Plate position shown above.

Position	Interpretation	Codes = Description
1	Country of Origin	1 = Built in U.S. by DaimlerChrysler Corporation
2	Assembler	B = Dodge
3	Vehicle Type	7 = Truck (CGS)
4	GVWR & Pass. Safety	F = 4001-5000 lbs (1815-2267 kg) G = 5001-6000 lbs (2268-2721 kg) H = 6001-7000 lbs (2722-3175 kg) J = 7001-8000 lbs (3176-3628 kg) D = 0-3000 lbs (0-1360 kg) E = 3001-4000 lbs (1361-1814 kg) K = 8001-9000 lbs (3629-4082 kg) L = 9001-10000 lbs (4083-4535 kg) M = 10001-14000 lbs (4536-6350 kg)
5	Vehicle Line	G = Dakota, Dakota/Sport, Dakota 4x4 L = Dakota, Dakota/Sport, Dakota 4x2
6	Series	2 = L Series/Sport/SLT
7	Body Style	2 = Club Cab (31) 6 = Regular Cab (61) 8 = Quad Club Cab (84)
8	Engine	N = 4.7L 8 Cyl Gasoline (MPI) (EVA) P = 2.5L 4 Cyl. Gasoline MPI (Unleaded) (EPE) X = 3.9L 6 Cyl. Gasoline MPI (EHC) Z = 5.9L 8 Cyl. Gasoline (MPI) LDC (EML)
9	Check Digit	0 = Check Digit 0 = Check Digit
10	Model Year	1 = 2001 2 = 2002 V = 1997 W = 1998 X = 1999 Y = 2000
11	Assembly Plant	S = Dodge City
12 thru 17	Vehicle Build Sequence	Model Year Assembly Sequence

Group - 1

Component Parts for Mopar Accessories

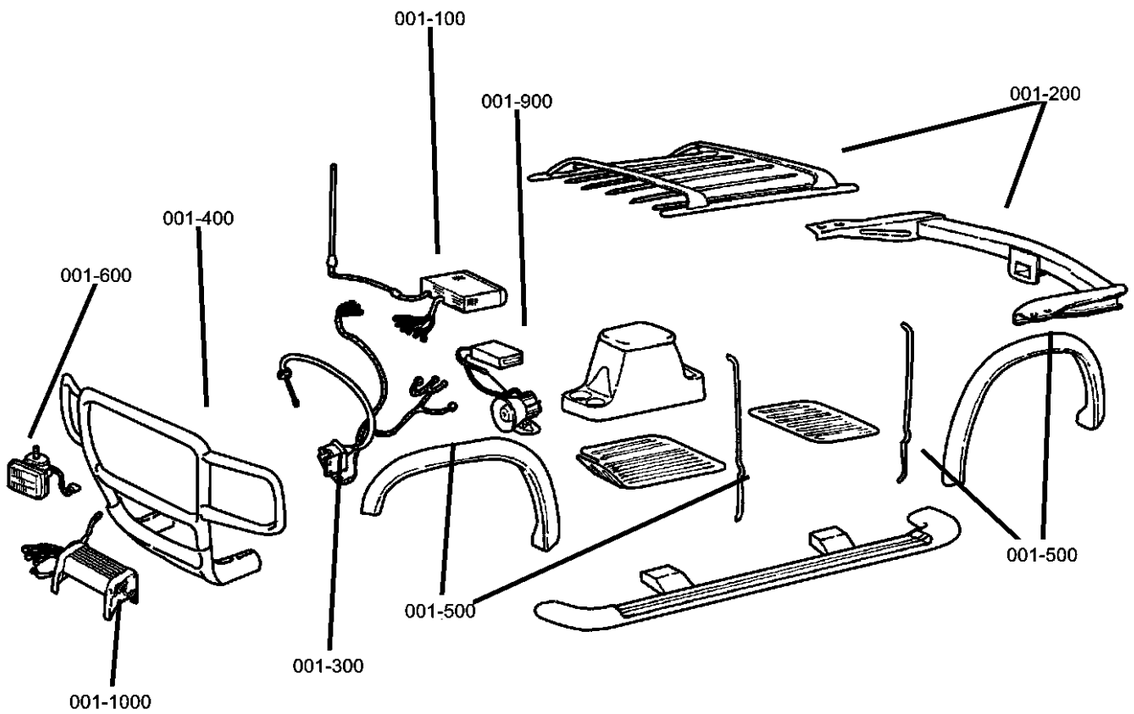

001-100 Audio & Electronics 	**001-1000** 4 - Wheeling & Off Road 	**001-200** Carriers & Cargo Hauling 	**001-300** Driving Convenience
001-400 Exterior Appearance 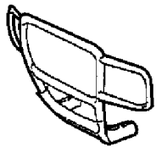	**001-500** Exterior Protection 	**001-600** Fog Lights & Electrical 	**001-900** Security

Group - 1 Component Parts for Mopar Accessories

Illustration Title — Group-Fig. No.

Audio & Electronics
Player Kit - CD Changer - 6 Disc. ..... Fig. 1 - 110
Install Kit -CD Changer - Trunk ..... Fig. 1 - 130

Carriers & Cargo Hauling
Carrier Kit - Ski ..... Fig. 1 - 220
Wiring Kit - Trailer Tow - 7 Way ..... Fig. 1 - 240
Wiring Kit - Trailer Tow - 4 Way ..... Fig. 1 - 242
Cooler Kit - Transmission Oil ..... Fig. 1 - 250
Cover Kit - Tonneau ..... Fig. 1 - 260
Cover Kit - Folding ..... Fig. 1 - 270
Cover Kit - Tonneau ..... Fig. 1 - 280

Driving Convenience
Control Package - Speed ..... Fig. 1 - 310
Mounting Kit - Cellular Phone ..... Fig. 1 - 320

Exterior Appearance
Brush Guard ..... Fig. 1 - 420
Grill Guard ..... Fig. 1 - 422

Exterior Protection
Bedliner, Trays and Mats ..... Fig. 1 - 510
Shield Kit - Air Front. ..... Fig. 1 - 530

Fog Lights & Electrical
Heater Kit - Engine Block ..... Fig. 1 - 610

Security
Alarm EVS Base System ..... Fig. 1 - 910
Alarm, EVSII ..... Fig. 1 - 914

4 - Wheeling & Off Road
Plate Package - Skid, Front ..... Fig. 1 - 1020
Plate Package - Skid, Fuel Tank ..... Fig. 1 - 1022

Player Kit - CD Changer - 6 Disc
Figure 1-110

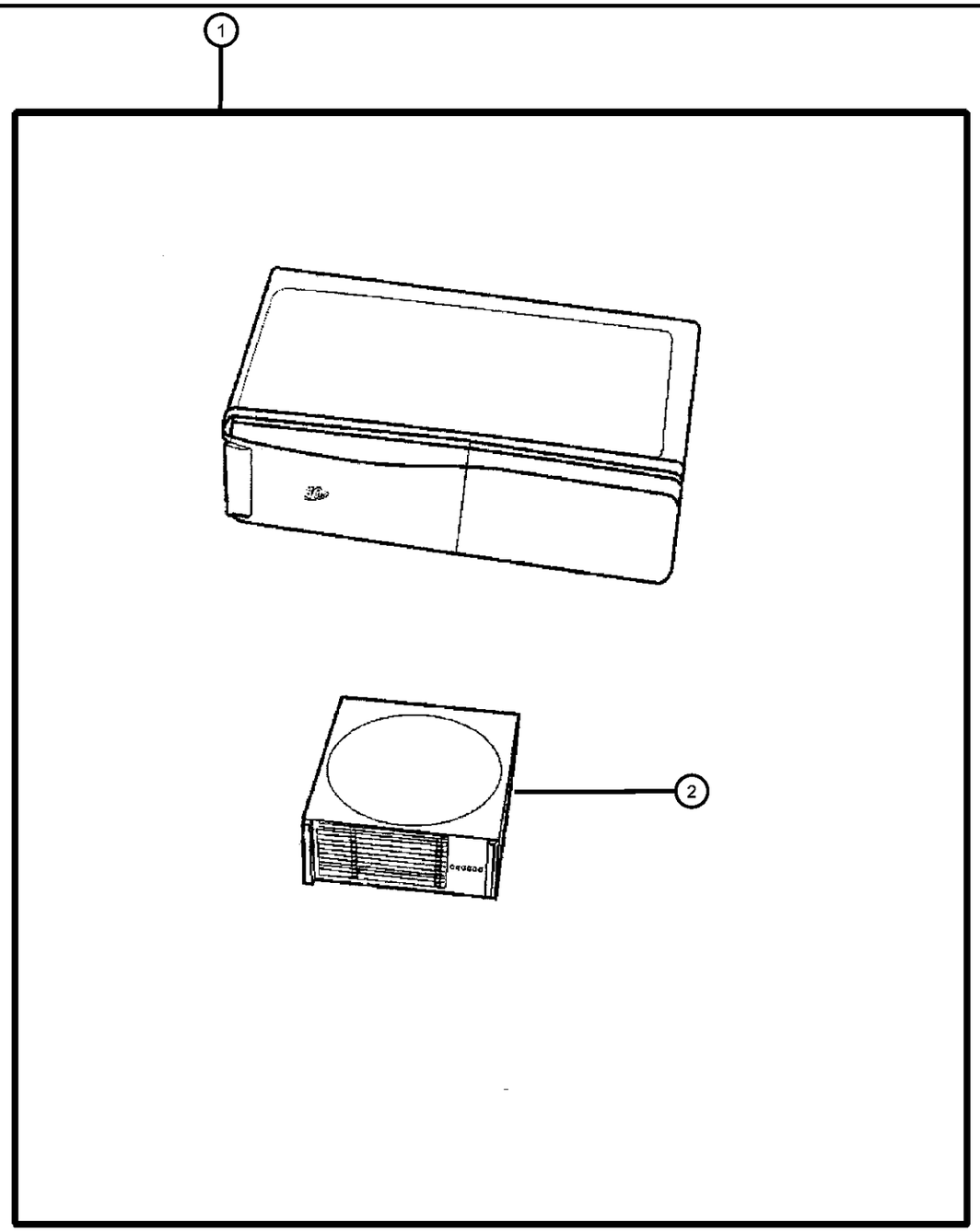

ITEM	PART NUMBER	QTY	LINE	SERIES	BODY	ENGINE	TRANS	TRIM	DESCRIPTION
1									PLAYER KIT, CD Changer - 6 Disc
	82202700	1							Player Kit, CD Changer 6 Disc for Radios w/o CD Controls
	82207483	1							Player Kit, CD Changer 6 Disc for Radios with CD Controls
2	04797433	1							MAGAZINE, CD Changer

DAKOTA (AN)

SERIES	LINE	BODY	ENGINE	TRANSMISSION
L = Dakota (All)	1 = Dakota 2WD	61 = Regular Cab (112 WB)	EPE = 2.5L 4 Cylinder	DGK = 4 Speed Automatic 42RE
	5 = Dakota 4WD	31 = Club Cab (131 WB)	EHC = 3.9L 6 Cylinder	DGT = 4 Speed Automatic 46RE
		84 = Quad Cab (131 WB)	EML = 5.0L 8 Cylinder	DDC = 5 Speed HD Manual
			EVA = 4.7L Magnum V8	DDK = 5 Speed HD Manual
			EP0 = All 2.5L	DG4 = Multispeed Automatic 45RFE
			EH0 = All 3.9L	DG0 = All Automatic Transmissions
			EM0 = All 5.9L	DBB = All Manual Transmissions
			EV0 = All 4.7L	

Install Kit -CD Changer - Trunk
Figure 1-130

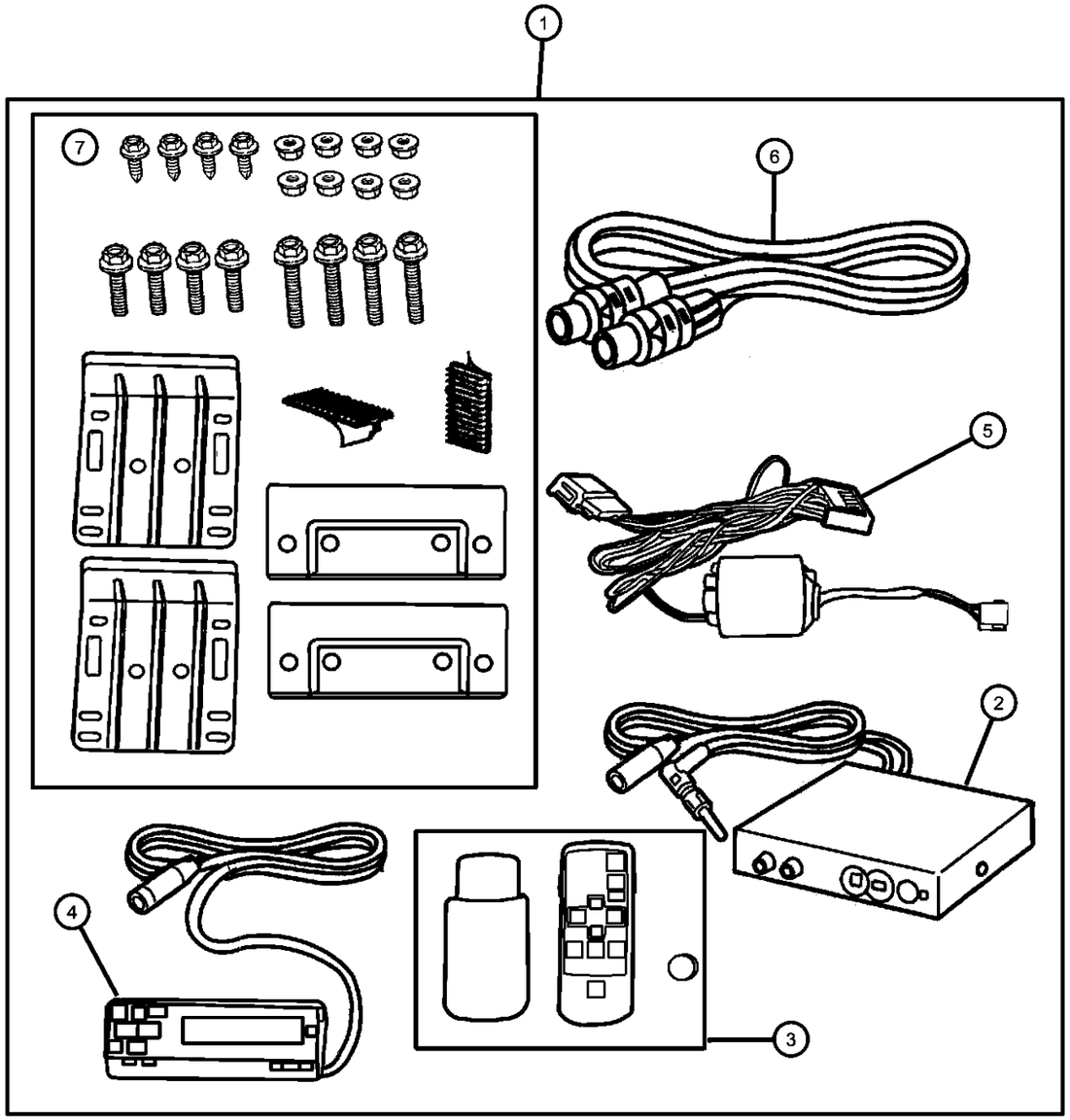

ITEM	PART NUMBER	QTY	LINE	SERIES	BODY	ENGINE	TRANS	TRIM	DESCRIPTION
1	82207481	1							INSTALL KIT, CD Changer - Trunk
2	82207481	1							MODULATOR, FM Changer, Serviced in Package, (NOT SERVICED)
3	05017217AA	1							CONTROLLER, CD Wireless
4	05017217AA	1							CONTROLLER, CD Wired, (NOT SERVICED)
5	04465117	1							ADAPTOR, A/C
6	04465113	1							CABLE, Din
7	04465113	1							HARDWARE KIT, Mounting, Serviced in package, (NOT SERVICED)

DAKOTA (AN)

SERIES	LINE	BODY	ENGINE	TRANSMISSION
L = Dakota (All)	1 = Dakota 2WD	61 = Regular Cab (112 WB)	EPE = 2.5L 4 Cylinder	DGK = 4 Speed Automatic 42RE
	5 = Dakota 4WD	31 = Club Cab (131 WB)	EHC = 3.9L 6 Cylinder	DGT = 4 Speed Automatic 46RE
		84 = Quad Cab (131 WB)	EML = 5.0L 8 Cylinder	DDC = 5 Speed HD Manual
			EVA = 4.7L Magnum V8	DDK = 5 Speed HD Manual
			EP0 = All 2.5L	DG4 = Multispeed Automatic 45RFE
			EH0 = All 3.9L	DG0 = All Automatic Transmissions
			EM0 = All 5.9L	DBB = All Manual Transmissions
			EV0 = All 4.7L	

Carrier Kit - Ski
Figure 1-220

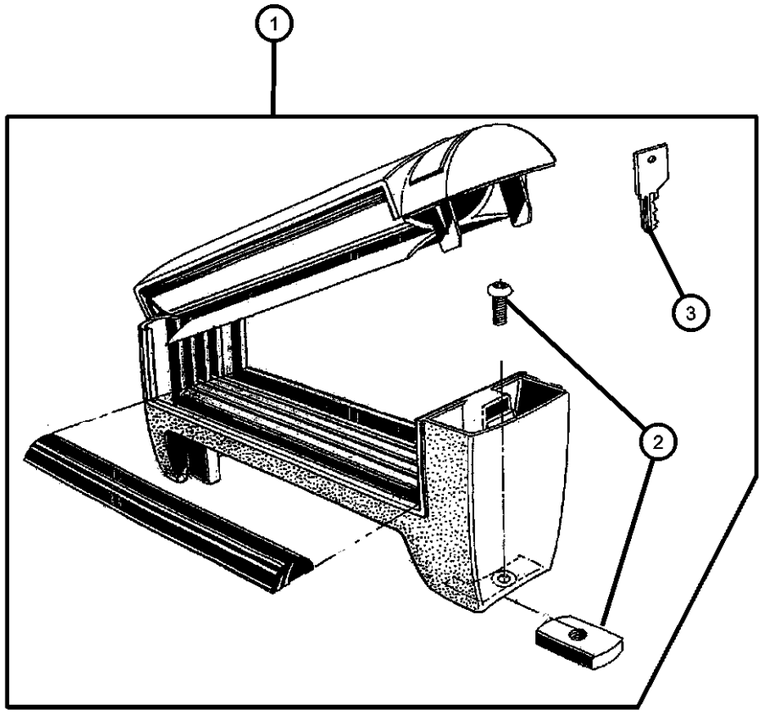

ITEM	PART NUMBER	QTY	LINE	SERIES	BODY	ENGINE	TRANS	TRIM	DESCRIPTION
NOTE: New keys are Vendor Ship Direct.									
1	82203474	1	1, 5		84				CARRIER KIT, Ski - 2 Pair
2	05018389AA	1	1, 5		84				HARDWARE KIT, Mounting
3	05018389AA	1							KEY, Master, (NOT SERVICED)

DAKOTA (AN)

SERIES	LINE	BODY	ENGINE	TRANSMISSION
L = Dakota (All)	1 = Dakota 2WD	61 = Regular Cab (112 WB)	EPE = 2.5L 4 Cylinder	DGK = 4 Speed Automatic 42RE
	5 = Dakota 4WD	31 = Club Cab (131 WB)	EHC = 3.9L 6 Cylinder	DGT = 4 Speed Automatic 46RE
		84 = Quad Cab (131 WB)	EML = 5.0L 8 Cylinder	DDC = 5 Speed HD Manual
			EVA = 4.7L Magnum V8	DDK = 5 Speed HD Manual
			EP0 = All 2.5L	DG4 = Multispeed Automatic 45RFE
			EH0 = All 3.9L	DG0 = All Automatic Transmissions
			EM0 = All 5.9L	DBB = All Manual Transmissions
			EV0 = All 4.7L	

Wiring Kit - Trailer Tow - 7 Way
Figure 1-240

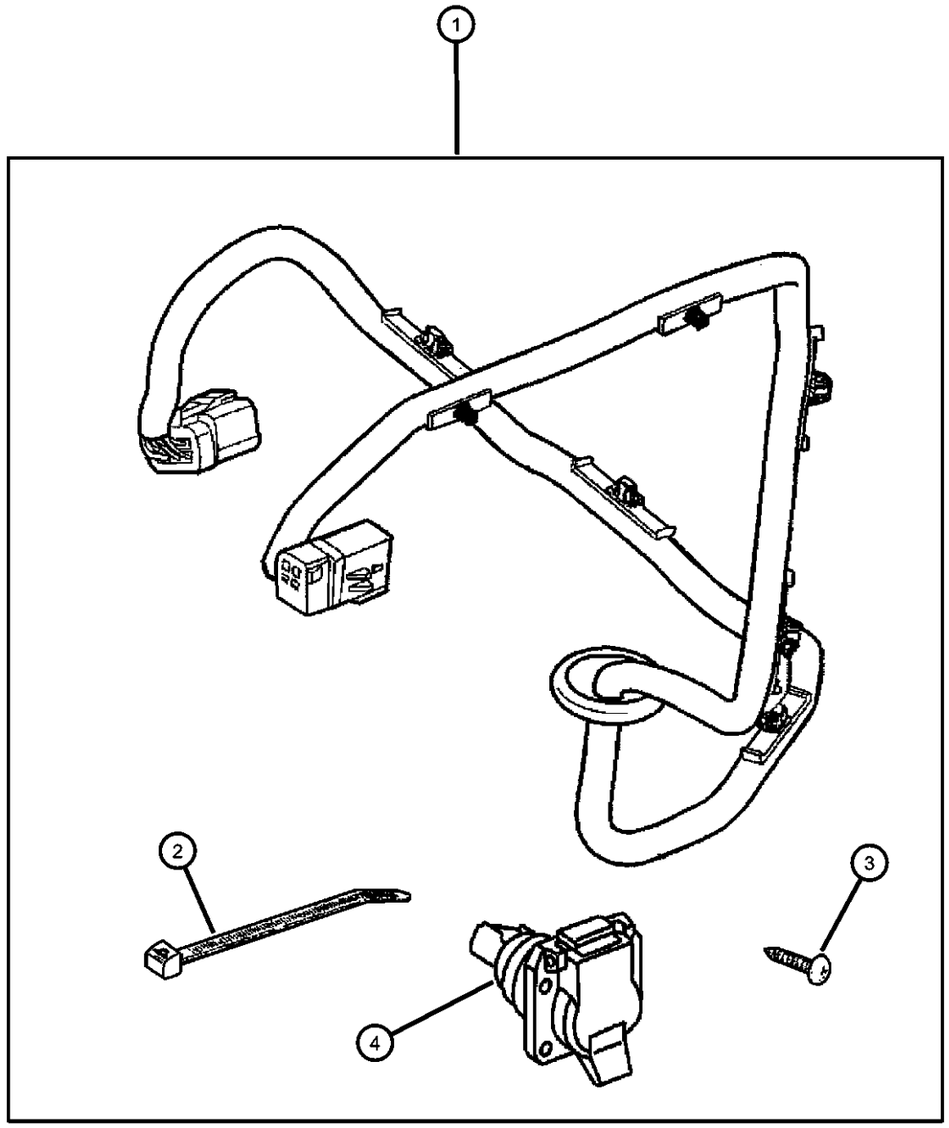

ITEM	PART NUMBER	QTY	LINE	SERIES	BODY	ENGINE	TRANS	TRIM	DESCRIPTION
NOTE: Will not fit Chassis Cab. Built in Running Light Relay.									
1	82204724	1							WIRING KIT, Trailer Tow - 7 Way
2	06015756	1							STRAP, Tie
3	00154633	4							SCREW, .164-18x.625
4	56038366AB	1							CONNECTOR, 7 Way
-5	56007078	1							RELAY, Electrical

DAKOTA (AN)

SERIES	LINE	BODY	ENGINE	TRANSMISSION
L = Dakota (All)	1 = Dakota 2WD	61 = Regular Cab (112 WB)	EPE = 2.5L 4 Cylinder	DGK = 4 Speed Automatic 42RE
	5 = Dakota 4WD	31 = Club Cab (131 WB)	EHC = 3.9L 6 Cylinder	DGT = 4 Speed Automatic 46RE
		84 = Quad Cab (131 WB)	EML = 5.0L 8 Cylinder	DDC = 5 Speed HD Manual
			EVA = 4.7L Magnum V8	DDK = 5 Speed HD Manual
			EP0 = All 2.5L	DG4 = Multispeed Automatic 45RFE
			EH0 = All 3.9L	DG0 = All Automatic Transmissions
			EM0 = All 5.9L	DBB = All Manual Transmissions
			EV0 = All 4.7L	

Wiring Kit - Trailer Tow - 4 Way
Figure 1-242

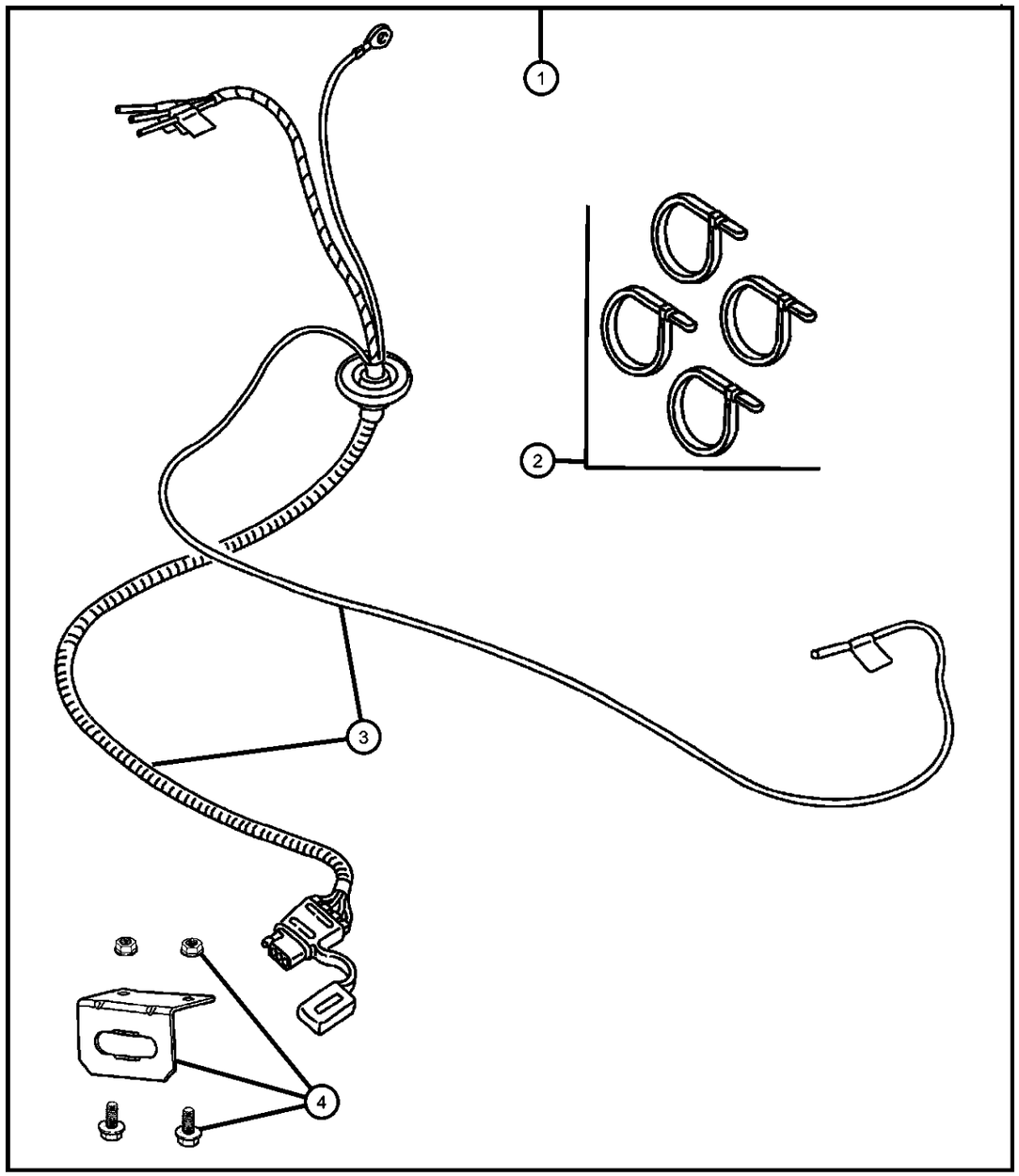

ITEM	PART NUMBER	QTY	LINE	SERIES	BODY	ENGINE	TRANS	TRIM	DESCRIPTION
NOTE; Molded cap with Mopar Logo.									
1	82204641	1	1, 5		31, 61, 84				WIRING KIT, Trailer Tow, Four Way Flat
2	06016155	1							STRAP, Tie
3	06016155	1							WIRING, Trailer Tow, Serviced in Kit, (NOT SERVICED)
4	82204602	1							BRACKET KIT, Trailer Tow

DAKOTA (AN)

SERIES	LINE	BODY	ENGINE	TRANSMISSION
L = Dakota (All)	1 = Dakota 2WD	61 = Regular Cab (112 WB)	EPE = 2.5L 4 Cylinder	DGK = 4 Speed Automatic 42RE
	5 = Dakota 4WD	31 = Club Cab (131 WB)	EHC = 3.9L 6 Cylinder	DGT = 4 Speed Automatic 46RE
		84 = Quad Cab (131 WB)	EML = 5.0L 8 Cylinder	DDC = 5 Speed HD Manual
			EVA = 4.7L Magnum V8	DDK = 5 Speed HD Manual
			EP0 = All 2.5L	DG4 = Multispeed Automatic 45RFE
			EH0 = All 3.9L	DG0 = All Automatic Transmissions
			EM0 = All 5.9L	DBB = All Manual Transmissions
			EV0 = All 4.7L	

Cooler Kit - Transmission Oil
Figure 1-250

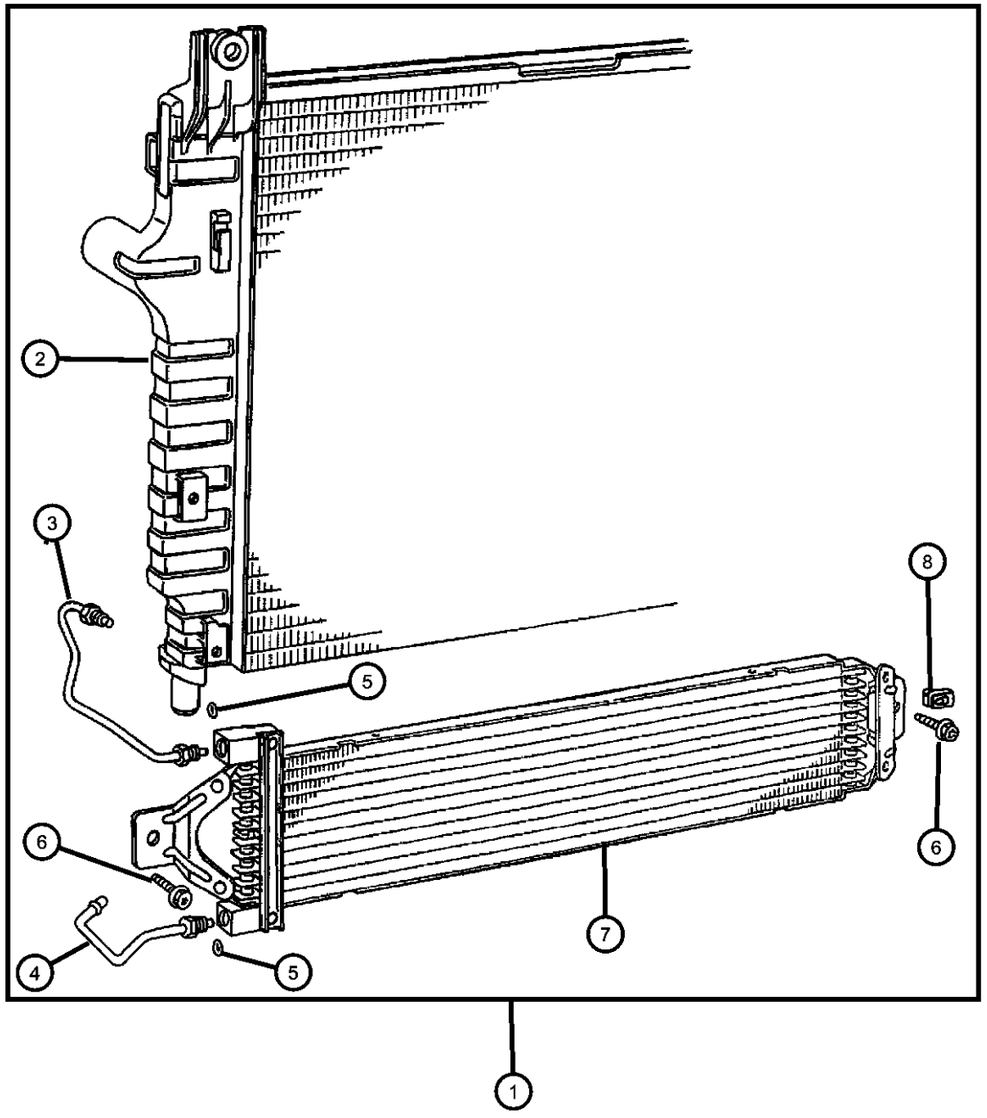

ITEM	PART NUMBER	QTY	LINE	SERIES	BODY	ENGINE	TRANS	TRIM	DESCRIPTION
1									COOLER PACKAGE, Transmission Oil
	82205677	1	1, 5		31, 61, 84				3.9L V6
	82205678	1	1, 5		31, 61, 84				4.7L and 5.9L V8
2									RADIATOR, Engine Cooling
	52028816AD	1							3.9L V6
	05066386AA								Mopar Coolant 5 Year/100,000 Mile Formula 1 Gallon
	52028818AD	1							4.7L and 5.9L V8
	05066386AA								Mopar Coolant 5 Year/100,000 Mile Formula 1 Gallon
3	05015415AA	1							TUBE, Oil CoolerUpper
4	05015416AA	1							TUBE, Oil CoolerLower
5	05016144AA	1							SEAL, O-Ring
6	04734274	2							SCREW, Decking Bracket
7	52028779AB	1							COOLER, Auxiliary Oil
8	52028779AB	1							U-NUT, M6x1.00, (NOT SERVICED)

DAKOTA (AN)

SERIES	LINE	BODY	ENGINE	TRANSMISSION
L = Dakota (All)	1 = Dakota 2WD	61 = Regular Cab (112 WB)	EPE = 2.5L 4 Cylinder	DGK = 4 Speed Automatic 42RE
	5 = Dakota 4WD	31 = Club Cab (131 WB)	EHC = 3.9L 6 Cylinder	DGT = 4 Speed Automatic 46RE
		84 = Quad Cab (131 WB)	EML = 5.0L 8 Cylinder	DDC = 5 Speed HD Manual
			EVA = 4.7L Magnum V8	DDK = 5 Speed HD Manual
			EP0 = All 2.5L	DG4 = Multispeed Automatic 45RFE
			EH0 = All 3.9L	DG0 = All Automatic Transmissions
			EM0 = All 5.9L	DBB = All Manual Transmissions
			EV0 = All 4.7L	

Cover Kit - Tonneau
Figure 1-260

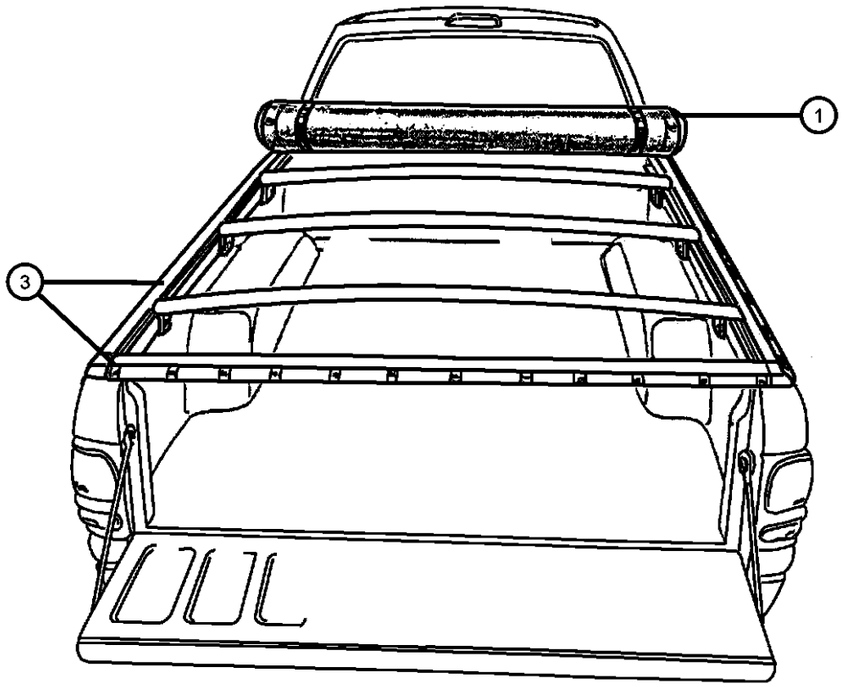

ITEM	PART NUMBER	QTY	LINE	SERIES	BODY	ENGINE	TRANS	TRIM	DESCRIPTION
NOTE; Not for use with OverRail Bedliners.									
1									COVER, Tonneau
	82202723	1	1, 5		31, 61				Sport Style 6.5 Foot Bed
	82203122	1	1, 5		31, 61				Premium Style 6.5 Foot Bed
-2	05017515AA	1	1, 5		31, 61				SNAP KIT, Tonneau Cover, Replacement Package of 10
3	05018233AA	1	1, 5		31, 61				RAIL KIT, Tonneau - Rear Mounting, Contains: 2 Corner Brackets and Thumb Screws, Snaps
-4	05018424AA	1	1, 5		31, 61				CLAMP, Cover, Contains: F shaped Upper Clamp, J shaped Lower Clamp and 3 Screws
-5									COVER KIT, Tonneau
	82204995	1	1, 5		31, 61				Snapless Style 6.5 Foot Bed
	82205000	1	1, 5		84				Snapless Style 5.25 Bed
-6	05014597AA	1	1, 5		31, 61				CLAMP, Over Center Style Clamp
-7	05018339AA	1	1, 5		31, 61				HARDWARE KIT, Mounting, Also Includes 4 Snapless Corner Pieces

DAKOTA (AN)

SERIES	LINE	BODY	ENGINE	TRANSMISSION
L = Dakota (All)	1 = Dakota 2WD	61 = Regular Cab (112 WB)	EPE = 2.5L 4 Cylinder	DGK = 4 Speed Automatic 42RE
	5 = Dakota 4WD	31 = Club Cab (131 WB)	EHC = 3.9L 6 Cylinder	DGT = 4 Speed Automatic 46RE
		84 = Quad Cab (131 WB)	EML = 5.0L 8 Cylinder	DDC = 5 Speed HD Manual
			EVA = 4.7L Magnum V8	DDK = 5 Speed HD Manual
			EP0 = All 2.5L	DG4 = Multispeed Automatic 45RFE
			EH0 = All 3.9L	DG0 = All Automatic Transmissions
			EM0 = All 5.9L	DBB = All Manual Transmissions
			EV0 = All 4.7L	

Cover Kit - Folding
Figure 1-270

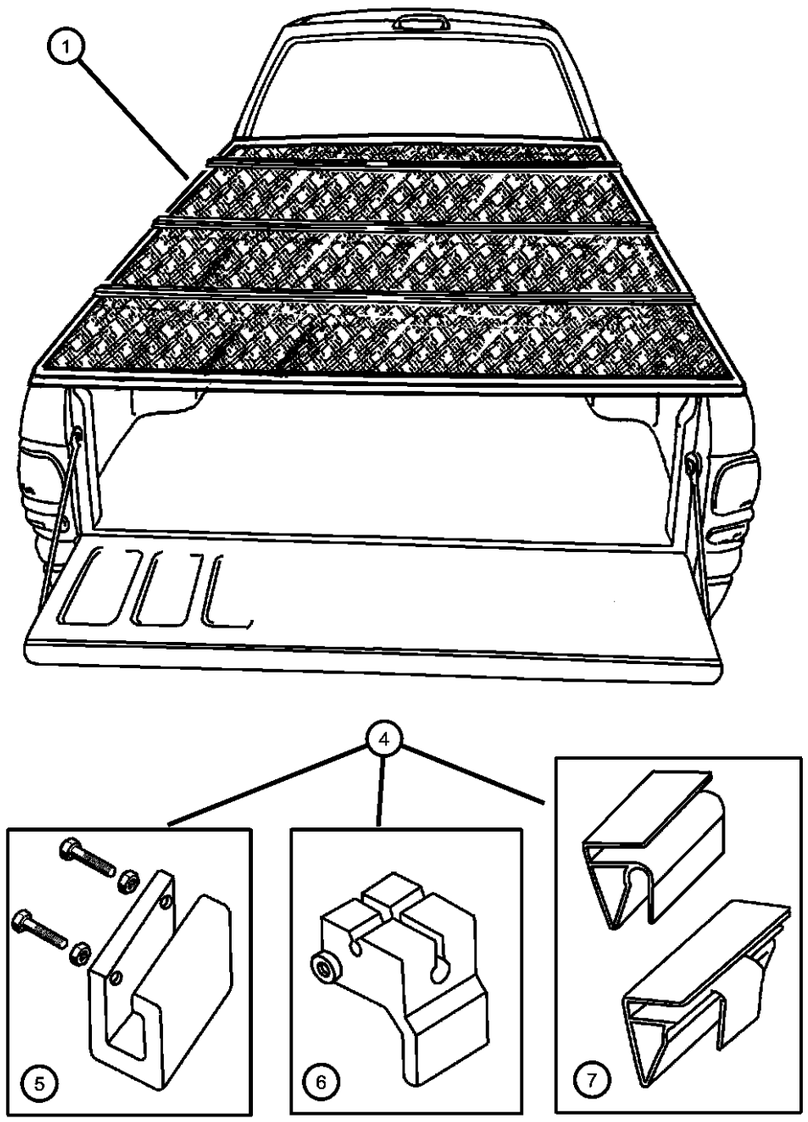

ITEM	PART NUMBER	QTY	LINE	SERIES	BODY	ENGINE	TRANS	TRIM	DESCRIPTION
NOTE; 82202727 requires hardware kit for installation.									
1									COVER KIT, Tonneau-Folding
	82202727	1	1, 5		31, 61				6.5 Foot Bed
	82205224	1	1, 5		84				5.25 Foot Bed Includes Hardware.
-2									LOCK KIT, Folding-tonneau
	05018118AA	1	1, 5		84				
		1	1, 5		31, 61				
-3									KEY, Master
	05018386AA	1	1, 5		31, 61				
		1	1, 5		84				
4	82203246	1	1, 5		31, 61				HARDWARE KIT, Tonneau - Folding
5	05071483AA	1	1, 5		31, 61				CLAMP, Cover
6	05071489AA	1	1, 5		31, 61				BRACKET, Tonneau
7	05071487AA	1	1, 5		31, 61				BRACKET, Tonneau

DAKOTA (AN)

SERIES	LINE	BODY	ENGINE	TRANSMISSION
L = Dakota (All)	1 = Dakota 2WD	61 = Regular Cab (112 WB)	EPE = 2.5L 4 Cylinder	DGK = 4 Speed Automatic 42RE
	5 = Dakota 4WD	31 = Club Cab (131 WB)	EHC = 3.9L 6 Cylinder	DGT = 4 Speed Automatic 46RE
		84 = Quad Cab (131 WB)	EML = 5.0L 8 Cylinder	DDC = 5 Speed HD Manual
			EVA = 4.7L Magnum V8	DDK = 5 Speed HD Manual
			EP0 = All 2.5L	DG4 = Multispeed Automatic 45RFE
			EH0 = All 3.9L	DG0 = All Automatic Transmissions
			EM0 = All 5.9L	DBB = All Manual Transmissions
			EV0 = All 4.7L	

Cover Kit - Tonneau
Figure 1-280

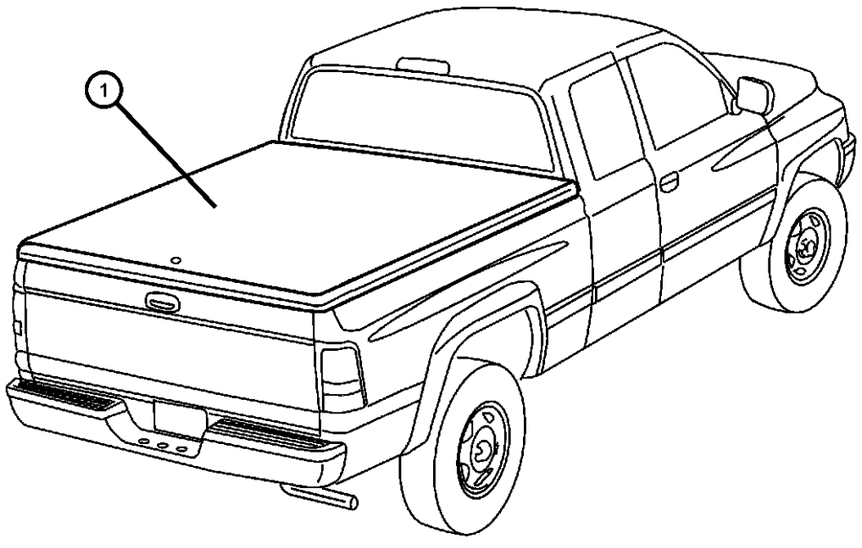

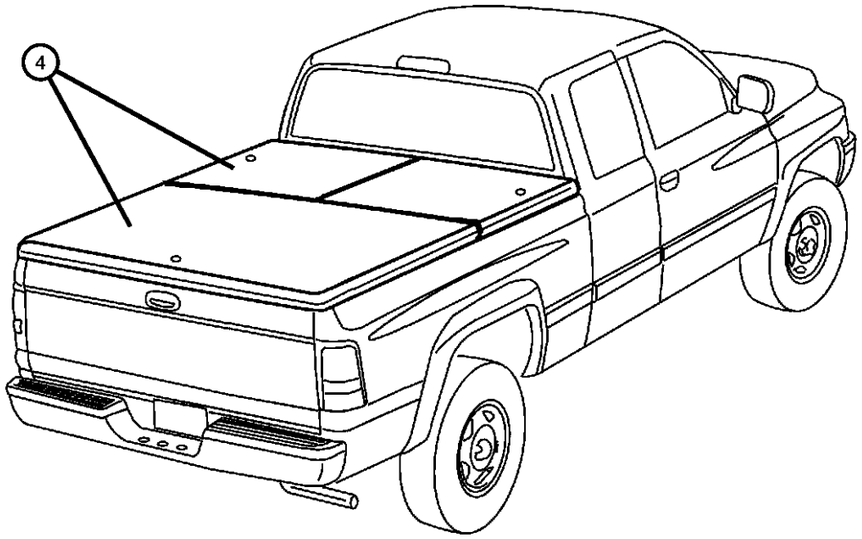

ITEM	PART NUMBER	QTY	LINE	SERIES	BODY	ENGINE	TRANS	TRIM	DESCRIPTION
1									COVER KIT, Tonneau-Hard, One Piece, 6.5 Foot Bed
	82204160	1	1, 5		31, 61				Forrest Green
	82204366	1	1, 5		31, 61				Black
	82204368	1	1, 5		31, 61				Flame Red
	82204370	1	1, 5		31, 61				White
	82205797	1	1, 5		31, 61				Patriot Blue
	82205798	1	1, 5		31, 61				Garnet Red
	82206992	1	1, 5		31, 61				Bright Silver Metallic
-2	05018117AA	1	1, 5		31, 61				LOCK KIT, Hard-tonneau
-3	05018343AA	1	1, 5		31, 61				KEY, Master
4									COVER KIT, Tonneau-Hard, Three Piece, 5.25 Foot Bed
	82205069	1	1, 5		84				Black
	82205070	1	1, 5		84				White
	82205072	1			84				Flame Red
	82205073	1			84				Forrest Green
	82205076	1			84				Patriot Blue
	82205077	1			84				Garnet Red
	82206991	1	1, 5		84				Bright Silver Metallic
-5									GAS PROP KIT, Tonneau-hard
	05018067AA	1			84				Pair includes brackets
	05018201AA	1			84				Gas Struts for the front
-6	05018117AA	1			84				LOCK KIT, Hard-tonneau
-7	05018343AA	1			84				KEY, Master

DAKOTA (AN)

SERIES	LINE	BODY	ENGINE	TRANSMISSION
L = Dakota (All)	1 = Dakota 2WD	61 = Regular Cab (112 WB)	EPE = 2.5L 4 Cylinder	DGK = 4 Speed Automatic 42RE
	5 = Dakota 4WD	31 = Club Cab (131 WB)	EHC = 3.9L 6 Cylinder	DGT = 4 Speed Automatic 46RE
		84 = Quad Cab (131 WB)	EML = 5.0L 8 Cylinder	DDC = 5 Speed HD Manual
			EVA = 4.7L Magnum V8	DDK = 5 Speed HD Manual
			EP0 = All 2.5L	DG4 = Multispeed Automatic 45RFE
			EH0 = All 3.9L	DG0 = All Automatic Transmissions
			EM0 = All 5.9L	DBB = All Manual Transmissions
			EV0 = All 4.7L	

Control Package - Speed
Figure 1-310

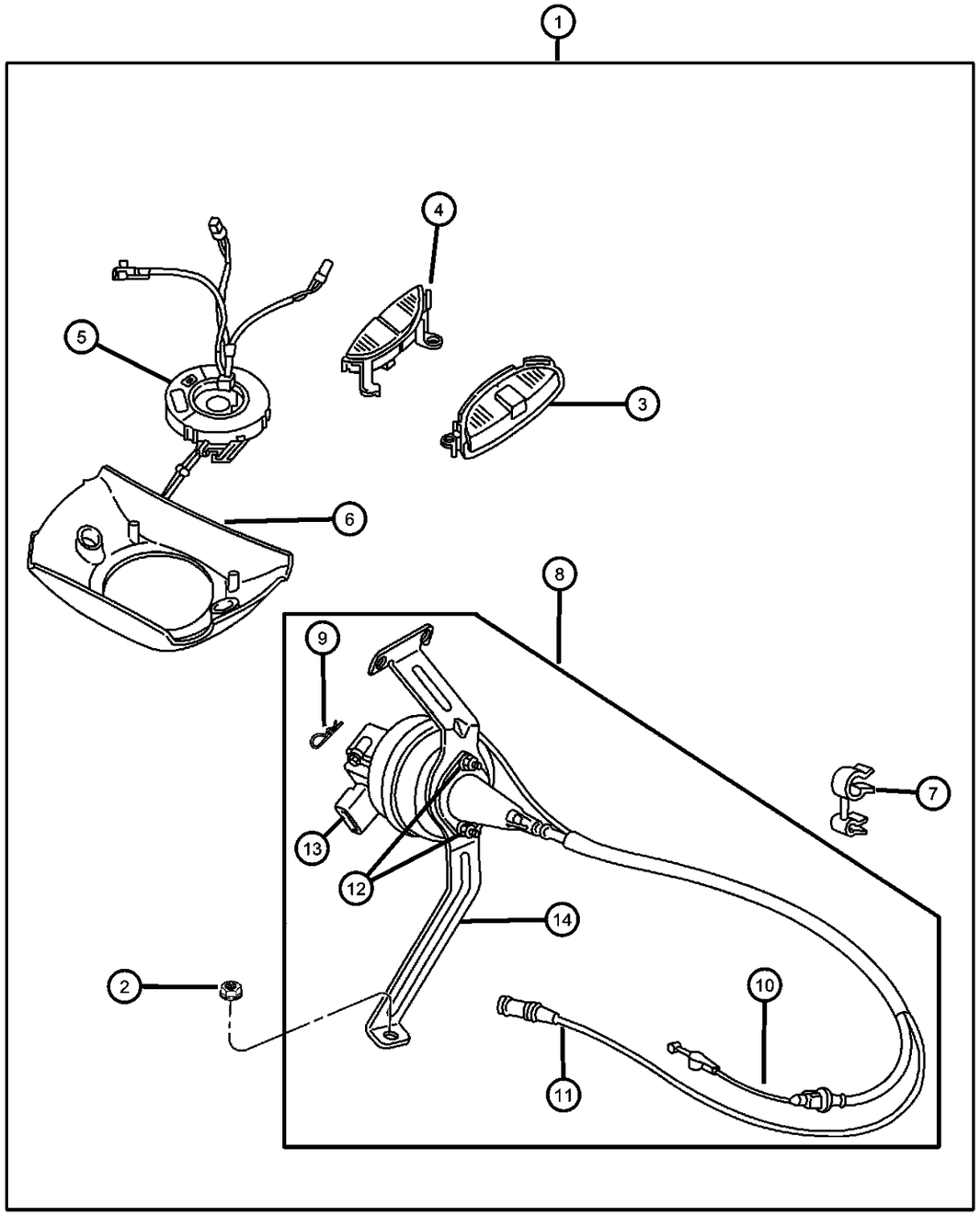

ITEM	PART NUMBER	QTY	LINE	SERIES	BODY	ENGINE	TRANS	TRIM	DESCRIPTION
1									CONTROL PACKAGE, Speed Control
	82206969	1	1, 5		31, 61, 84				3.9L V6
	82206970	1	1, 5		31, 61, 84				4.7L V8
	82206971	1	1, 5		31, 61, 84				5.9L V8
2	82206971	1							NUT AND WASHER, M6x1.00, (NOT SERVICED),
3	56021332AB	1							SWITCH, Speed Control, Right
4	56021333AB	1							SWITCH, Speed Control, Left
5	56045403AF	1							CLOCKSPRING
6									SHROUD, Steering Column
	5GE09DX9AB	1							Black / Tilt
	5GE10DX9AB	1							Without Tilt
7	06506545AA	1							CLIP, Cruise Control, 4.7L V8
8	06506545AA	1							CONTROL, Speed, Service Component Parts, (NOT SERVICED)
9	06025867	1							CLIP, Cable to Servo Attach
10									CABLE, Speed Control
	05015853AA	1							5.9L V8
	05015856AA	1							3.9L V6
	05015857AB	1							4.7L V8
11									HARNESS, Speed Control Vacuum
	05015845AA	1							5.9L V8
		1							3.9L V6
	05015846AA	1							4.7L V8
12	06500274	1							LOCK NUT, M6x1.0x6
13	04669977	1							SERVO, Speed Control
14	05015843AA	1							BRACKET, Cruise Control Servo

DAKOTA (AN)

SERIES	LINE	BODY	ENGINE	TRANSMISSION
L = Dakota (All)	1 = Dakota 2WD	61 = Regular Cab (112 WB)	EPE = 2.5L 4 Cylinder	DGK = 4 Speed Automatic 42RE
	5 = Dakota 4WD	31 = Club Cab (131 WB)	EHC = 3.9L 6 Cylinder	DGT = 4 Speed Automatic 46RE
		84 = Quad Cab (131 WB)	EML = 5.0L 8 Cylinder	DDC = 5 Speed HD Manual
			EVA = 4.7L Magnum V8	DDK = 5 Speed HD Manual
			EP0 = All 2.5L	DG4 = Multispeed Automatic 45RFE
			EH0 = All 3.9L	DG0 = All Automatic Transmissions
			EM0 = All 5.9L	DBB = All Manual Transmissions
			EV0 = All 4.7L	

Mounting Kit - Cellular Phone
Figure 1-320

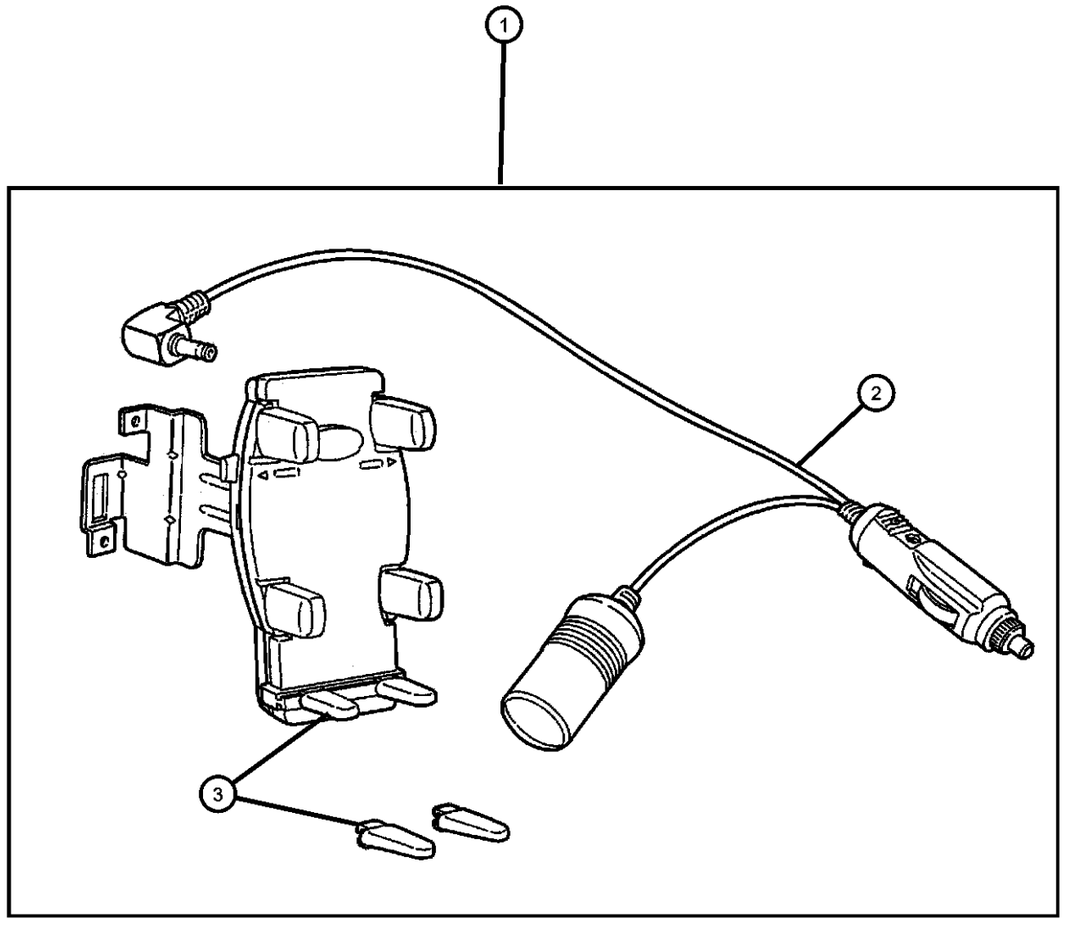

ITEM	PART NUMBER	QTY	LINE	SERIES	BODY	ENGINE	TRANS	TRIM	DESCRIPTION
1	82206685	1							MOUNTING KIT, Cellular Phone
2	05018104AA	1							CORD, Cellular Phone, 7.5 inch long
3	05018103AA	1							HARDWARE KIT, Accessory, Long Support Feet

DAKOTA (AN)

SERIES	LINE	BODY	ENGINE	TRANSMISSION
L = Dakota (All)	1 = Dakota 2WD	61 = Regular Cab (112 WB)	EPE = 2.5L 4 Cylinder	DGK = 4 Speed Automatic 42RE
	5 = Dakota 4WD	31 = Club Cab (131 WB)	EHC = 3.9L 6 Cylinder	DGT = 4 Speed Automatic 46RE
		84 = Quad Cab (131 WB)	EML = 5.0L 8 Cylinder	DDC = 5 Speed HD Manual
			EVA = 4.7L Magnum V8	DDK = 5 Speed HD Manual
			EP0 = All 2.5L	DG4 = Multispeed Automatic 45RFE
			EH0 = All 3.9L	DG0 = All Automatic Transmissions
			EM0 = All 5.9L	DBB = All Manual Transmissions
			EV0 = All 4.7L	

Brush Guard
Figure 1-420

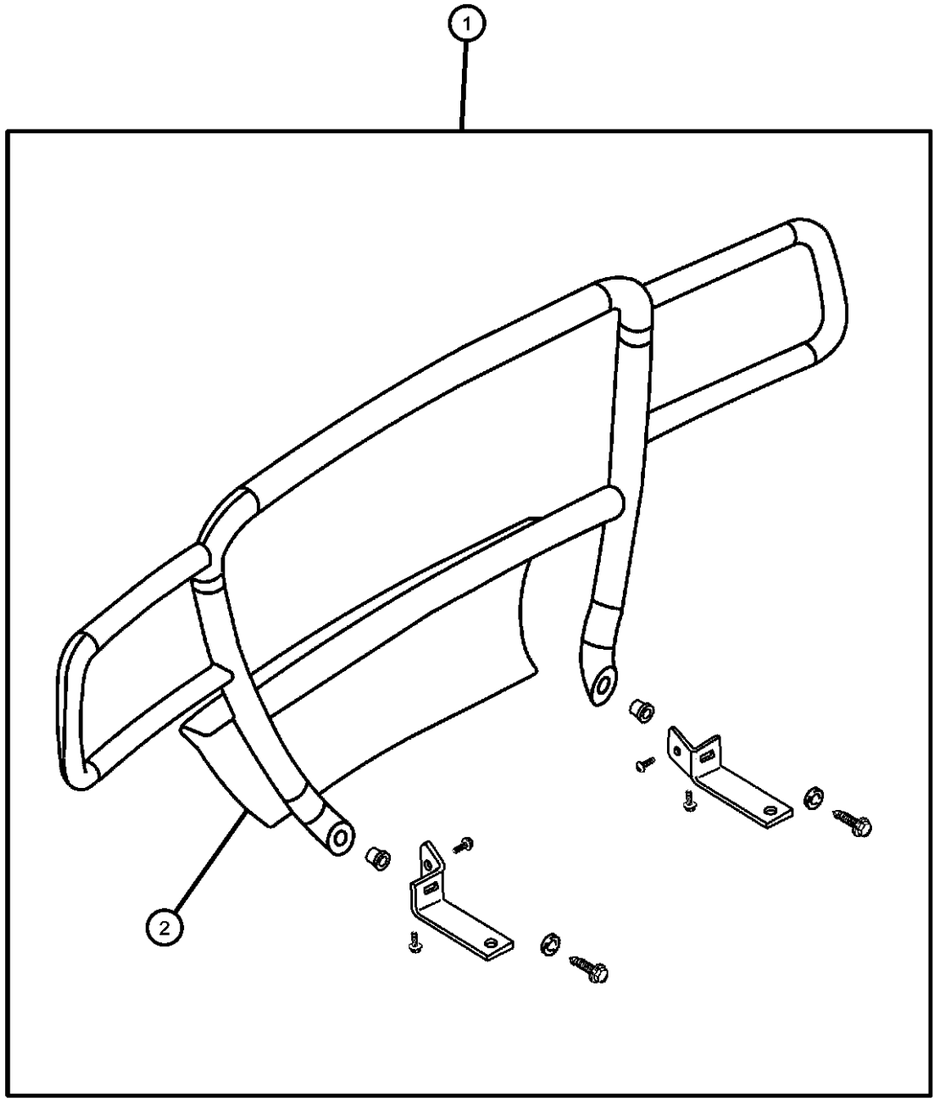

ITEM	PART NUMBER	QTY	LINE	SERIES	BODY	ENGINE	TRANS	TRIM	DESCRIPTION
NOTES:									
[P.A.R.] = Paint as Required									
1									GUARD KIT, Brush
	82206465	1	1, 5		31, 61, 84				Chromed Steel
	82206468	1	1, 5		31, 61, 84				Natural Aluminum
	82206469	1	1, 5		31, 61, 84				Black
	82206470	1	1, 5		31, 61, 84				Bright White
	82206471	1	1, 5		31, 61, 84				Flame Red
	82206472	1	1, 5		31, 61, 84				Forest Green
	82206473	1	1, 5		31, 61, 84				Patriot Blue
	82206474	1	1, 5		31, 61, 84				Bright Silver
	82206477	1			31, 61, 84				Garnet Red
2	05018364AA	1			31, 61, 84				FASCIA, Front, Primed, [P.A.R.]

DAKOTA (AN)

SERIES	LINE	BODY	ENGINE	TRANSMISSION
L = Dakota (All)	1 = Dakota 2WD	61 = Regular Cab (112 WB)	EPE = 2.5L 4 Cylinder	DGK = 4 Speed Automatic 42RE
	5 = Dakota 4WD	31 = Club Cab (131 WB)	EHC = 3.9L 6 Cylinder	DGT = 4 Speed Automatic 46RE
		84 = Quad Cab (131 WB)	EML = 5.0L 8 Cylinder	DDC = 5 Speed HD Manual
			EVA = 4.7L Magnum V8	DDK = 5 Speed HD Manual
			EP0 = All 2.5L	DG4 = Multispeed Automatic 45RFE
			EH0 = All 3.9L	DG0 = All Automatic Transmissions
			EM0 = All 5.9L	DBB = All Manual Transmissions
			EV0 = All 4.7L	

Grill Guard
Figure 1-422

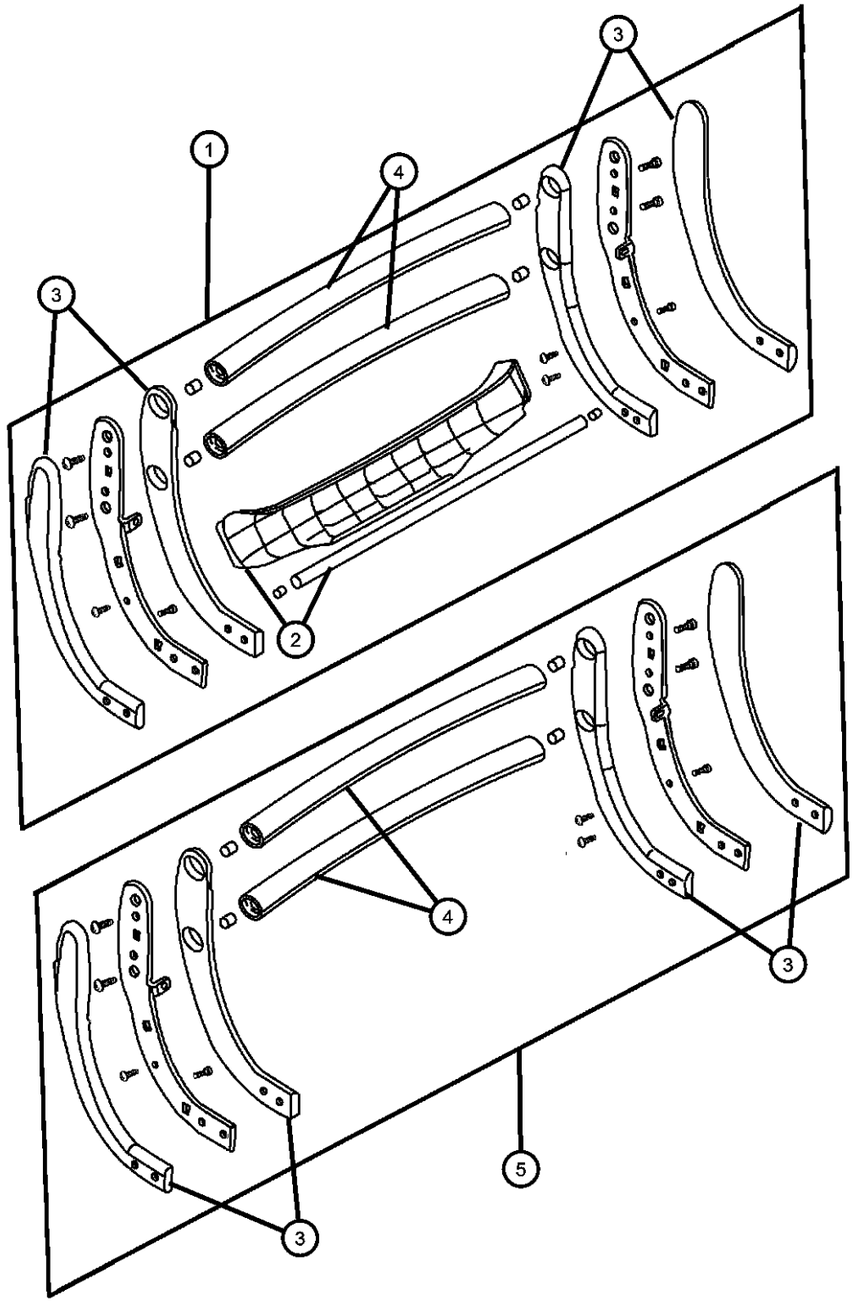

ITEM	PART NUMBER	QTY	LINE	SERIES	BODY	ENGINE	TRANS	TRIM	DESCRIPTION
1	82206478	1	1, 5		31, 61, 84				GUARD KIT, Grille, with Fascia, Black
2	05018425AA	1	1, 5		31, 61, 84				FASCIA, Front, Primed
3									END CAP, Grille Guard
	05018328AA	1	1, 5		31, 61, 84				Primed, Right
	05018329AA	1	1, 5		31, 61, 84				Primed, Left
4									CROSSTUBE, Grille Guard
	05018326AA	1	1, 5		31, 61, 84				Package of 2, Primed
	05018438AA	1	1, 5		31, 61, 84				Package of 2, Chromed
5									GUARD KIT, Grille, Without Fascia
	82206479	1	1, 5		31, 61, 84				Black
	82206480	1	1, 5		31, 61, 84				Chromed

DAKOTA (AN)

SERIES	LINE	BODY	ENGINE	TRANSMISSION
L = Dakota (All)	1 = Dakota 2WD	61 = Regular Cab (112 WB)	EPE = 2.5L 4 Cylinder	DGK = 4 Speed Automatic 42RE
	5 = Dakota 4WD	31 = Club Cab (131 WB)	EHC = 3.9L 6 Cylinder	DGT = 4 Speed Automatic 46RE
		84 = Quad Cab (131 WB)	EML = 5.0L 8 Cylinder	DDC = 5 Speed HD Manual
			EVA = 4.7L Magnum V8	DDK = 5 Speed HD Manual
			EP0 = All 2.5L	DG4 = Multispeed Automatic 45RFE
			EH0 = All 3.9L	DG0 = All Automatic Transmissions
			EM0 = All 5.9L	DBB = All Manual Transmissions
			EV0 = All 4.7L	

Bedliner, Trays and Mats
Figure 1-510

ITEM	PART NUMBER	QTY	LINE	SERIES	BODY	ENGINE	TRANS	TRIM	DESCRIPTION
1									TRAY, Molded Cargo
	82205003	1	1, 5		31, 61				6.5 Foot Box
	82206435	1			84				5.25 Foot Box
-2	05018121AA	1	1, 5		31, 61				HARDWARE KIT, Bed tray

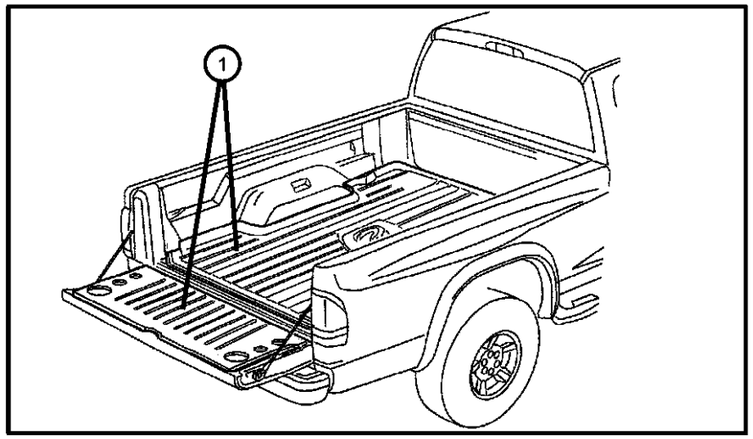

DAKOTA (AN)

SERIES	LINE	BODY	ENGINE	TRANSMISSION
L = Dakota (All)	1 = Dakota 2WD	61 = Regular Cab (112 WB)	EPE = 2.5L 4 Cylinder	DGK = 4 Speed Automatic 42RE
	5 = Dakota 4WD	31 = Club Cab (131 WB)	EHC = 3.9L 6 Cylinder	DGT = 4 Speed Automatic 46RE
		84 = Quad Cab (131 WB)	EML = 5.0L 8 Cylinder	DDC = 5 Speed HD Manual
			EVA = 4.7L Magnum V8	DDK = 5 Speed HD Manual
			EP0 = All 2.5L	DG4 = Multispeed Automatic 45RFE
			EH0 = All 3.9L	DG0 = All Automatic Transmissions
			EM0 = All 5.9L	DBB = All Manual Transmissions
			EV0 = All 4.7L	

Shield Kit - Air Front
Figure 1-530

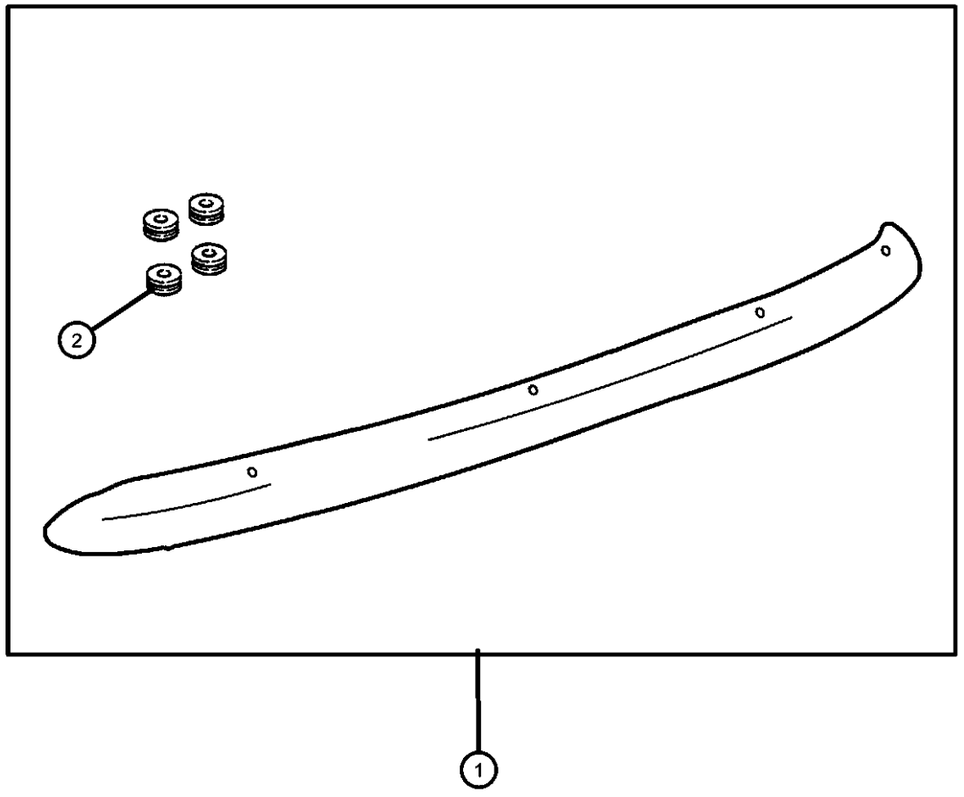

ITEM	PART NUMBER	QTY	LINE	SERIES	BODY	ENGINE	TRANS	TRIM	DESCRIPTION
NOTE: Shield Kit - Color Smoke, Material Lexan. Ram's Head Logo									
1									SHIELD KIT, Air - Front
	82202754	1	1, 5		31, 61, 84				
	82204322	1	1, 5		31, 61, 84				Includes hood and fender deflectors
2	05014754AA	1	1, 5		31, 61, 84				SPACER, Air Deflector

DAKOTA (AN)

SERIES	LINE	BODY	ENGINE	TRANSMISSION
L = Dakota (All)	1 = Dakota 2WD	61 = Regular Cab (112 WB)	EPE = 2.5L 4 Cylinder	DGK = 4 Speed Automatic 42RE
	5 = Dakota 4WD	31 = Club Cab (131 WB)	EHC = 3.9L 6 Cylinder	DGT = 4 Speed Automatic 46RE
		84 = Quad Cab (131 WB)	EML = 5.0L 8 Cylinder	DDC = 5 Speed HD Manual
			EVA = 4.7L Magnum V8	DDK = 5 Speed HD Manual
			EP0 = All 2.5L	DG4 = Multispeed Automatic 45RFE
			EH0 = All 3.9L	DG0 = All Automatic Transmissions
			EM0 = All 5.9L	DBB = All Manual Transmissions
			EV0 = All 4.7L	

Heater Kit - Engine Block
Figure 1-610

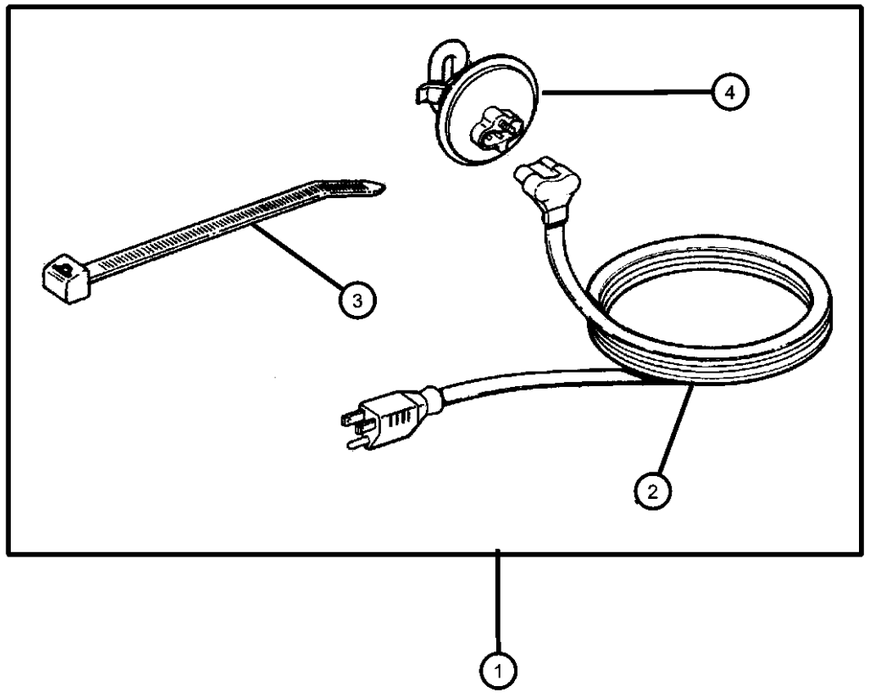

ITEM	PART NUMBER	QTY	LINE	SERIES	BODY	ENGINE	TRANS	TRIM	DESCRIPTION
1	82201505	1							HEATER PACKAGE, Engine Block, 2.5L Engine
2	56020234	1							CORD, Engine Block Heater
3	06015756	1							STRAP, Tie
4	06015756	1							HEATER KIT, Engine Block, (NOT SERVICED)

DAKOTA (AN)

SERIES	LINE	BODY	ENGINE	TRANSMISSION
L = Dakota (All)	1 = Dakota 2WD	61 = Regular Cab (112 WB)	EPE = 2.5L 4 Cylinder	DGK = 4 Speed Automatic 42RE
	5 = Dakota 4WD	31 = Club Cab (131 WB)	EHC = 3.9L 6 Cylinder	DGT = 4 Speed Automatic 46RE
		84 = Quad Cab (131 WB)	EML = 5.0L 8 Cylinder	DDC = 5 Speed HD Manual
			EVA = 4.7L Magnum V8	DDK = 5 Speed HD Manual
			EP0 = All 2.5L	DG4 = Multispeed Automatic 45RFE
			EH0 = All 3.9L	DG0 = All Automatic Transmissions
			EM0 = All 5.9L	DBB = All Manual Transmissions
			EV0 = All 4.7L	

Alarm EVS Base System
Figure 1-910

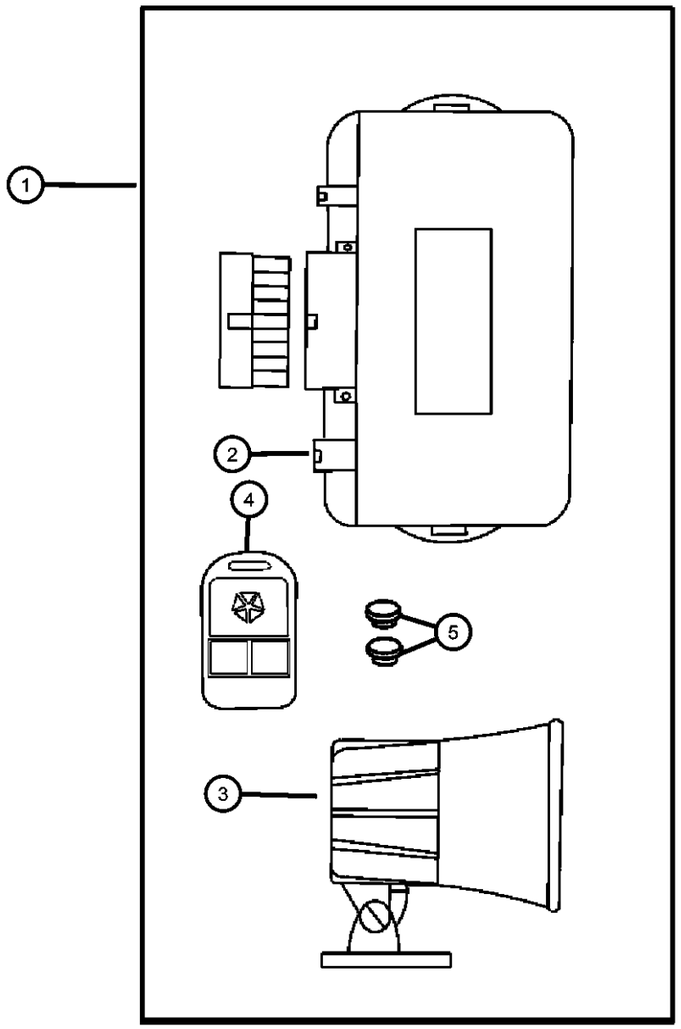

ITEM	PART NUMBER	QTY	LINE	SERIES	BODY	ENGINE	TRANS	TRIM	DESCRIPTION
1	82203763	1							MODULE KIT, Alarm without Keyless
2	82204268	1	1, 5		31, 61, 84				MODULE, Security Alarm, W/factory keyless entry
3	82203198	1							SIREN, Alarm
4	04886374AA	1							TRANSMITTER, Alarm or Keyless
5	04636141	1							BATTERY, Transmitter
-6	04886259AA	1	1, 5		31, 61, 84				INDICATOR, Valet Status
-7	04886258AA	1							SWITCH, Programing Bypass

DAKOTA (AN)

SERIES	LINE	BODY	ENGINE	TRANSMISSION
L = Dakota (All)	1 = Dakota 2WD	61 = Regular Cab (112 WB)	EPE = 2.5L 4 Cylinder	DGK = 4 Speed Automatic 42RE
	5 = Dakota 4WD	31 = Club Cab (131 WB)	EHC = 3.9L 6 Cylinder	DGT = 4 Speed Automatic 46RE
		84 = Quad Cab (131 WB)	EML = 5.0L 8 Cylinder	DDC = 5 Speed HD Manual
			EVA = 4.7L Magnum V8	DDK = 5 Speed HD Manual
			EP0 = All 2.5L	DG4 = Multispeed Automatic 45RFE
			EH0 = All 3.9L	DG0 = All Automatic Transmissions
			EM0 = All 5.9L	DBB = All Manual Transmissions
			EV0 = All 4.7L	

Alarm, EVSII
Figure 1-914

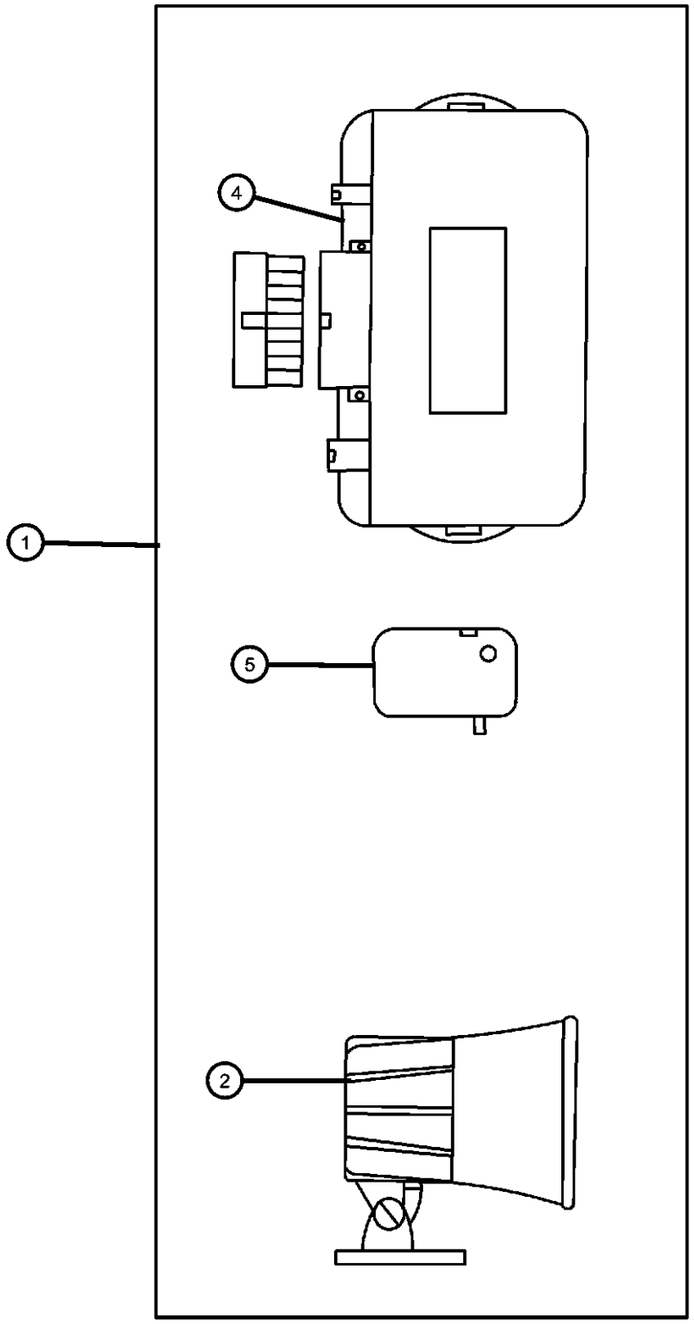

ITEM	PART NUMBER	QTY	LINE	SERIES	BODY	ENGINE	TRANS	TRIM	DESCRIPTION
1	82204268	1	1, 5		31, 61, 84				MODULE, Security Alarm
2	82203198	1	1, 5		31, 61, 84				SIREN, Alarm
-3	04886259AA	1	1, 5		31, 61, 84				INDICATOR, Valet Status
4	05011619AA	1	1, 5		31, 61, 84				MODULE, Security Alarm
5	04886261AA	1	1, 5		31, 61, 84				SENSOR, Shock, With Connector

DAKOTA (AN)

SERIES	LINE	BODY	ENGINE	TRANSMISSION
L = Dakota (All)	1 = Dakota 2WD	61 = Regular Cab (112 WB)	EPE = 2.5L 4 Cylinder	DGK = 4 Speed Automatic 42RE
	5 = Dakota 4WD	31 = Club Cab (131 WB)	EHC = 3.9L 6 Cylinder	DGT = 4 Speed Automatic 46RE
		84 = Quad Cab (131 WB)	EML = 5.0L 8 Cylinder	DDC = 5 Speed HD Manual
			EVA = 4.7L Magnum V8	DDK = 5 Speed HD Manual
			EP0 = All 2.5L	DG4 = Multispeed Automatic 45RFE
			EH0 = All 3.9L	DG0 = All Automatic Transmissions
			EM0 = All 5.9L	DBB = All Manual Transmissions
			EV0 = All 4.7L	

Plate Package - Skid, Front
Figure 1-1020

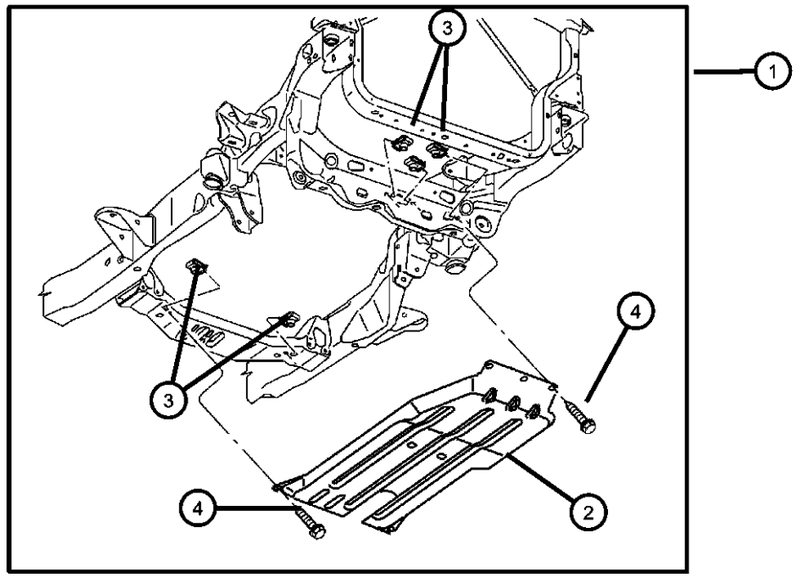

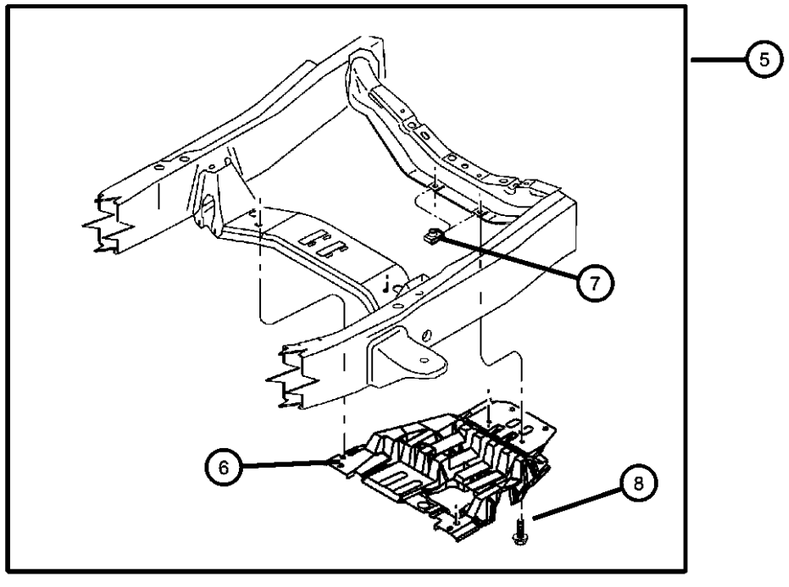

ITEM	PART NUMBER	QTY	LINE	SERIES	BODY	ENGINE	TRANS	TRIM	DESCRIPTION
1	82205936	1	5		31, 61				PLATE PACKAGE, Skid - Front
2	52020378AC	1	5						SKID PLATE, Front
3	06101340	2							U-NUT, M10-1.50
4	06506164AA	8	5						SCREW AND WASHER, Hex Head
5	82205937	1	5		31, 61, 84				PLATE PACKAGE, Skid - Transfer Case
6	52020479AB	1	5						SKID PLATE, Front
7	06101340	2							U-NUT, M10-1.50
8	06506164AA	2	5						SCREW AND WASHER, Hex Head

DAKOTA (AN)

SERIES	LINE	BODY	ENGINE	TRANSMISSION
L = Dakota (All)	1 = Dakota 2WD	61 = Regular Cab (112 WB)	EPE = 2.5L 4 Cylinder	DGK = 4 Speed Automatic 42RE
	5 = Dakota 4WD	31 = Club Cab (131 WB)	EHC = 3.9L 6 Cylinder	DGT = 4 Speed Automatic 46RE
		84 = Quad Cab (131 WB)	EML = 5.0L 8 Cylinder	DDC = 5 Speed HD Manual
			EVA = 4.7L Magnum V8	DDK = 5 Speed HD Manual
			EP0 = All 2.5L	DG4 = Multispeed Automatic 45RFE
			EH0 = All 3.9L	DG0 = All Automatic Transmissions
			EM0 = All 5.9L	DBB = All Manual Transmissions
			EV0 = All 4.7L	

Plate Package - Skid, Fuel Tank
Figure 1-1022

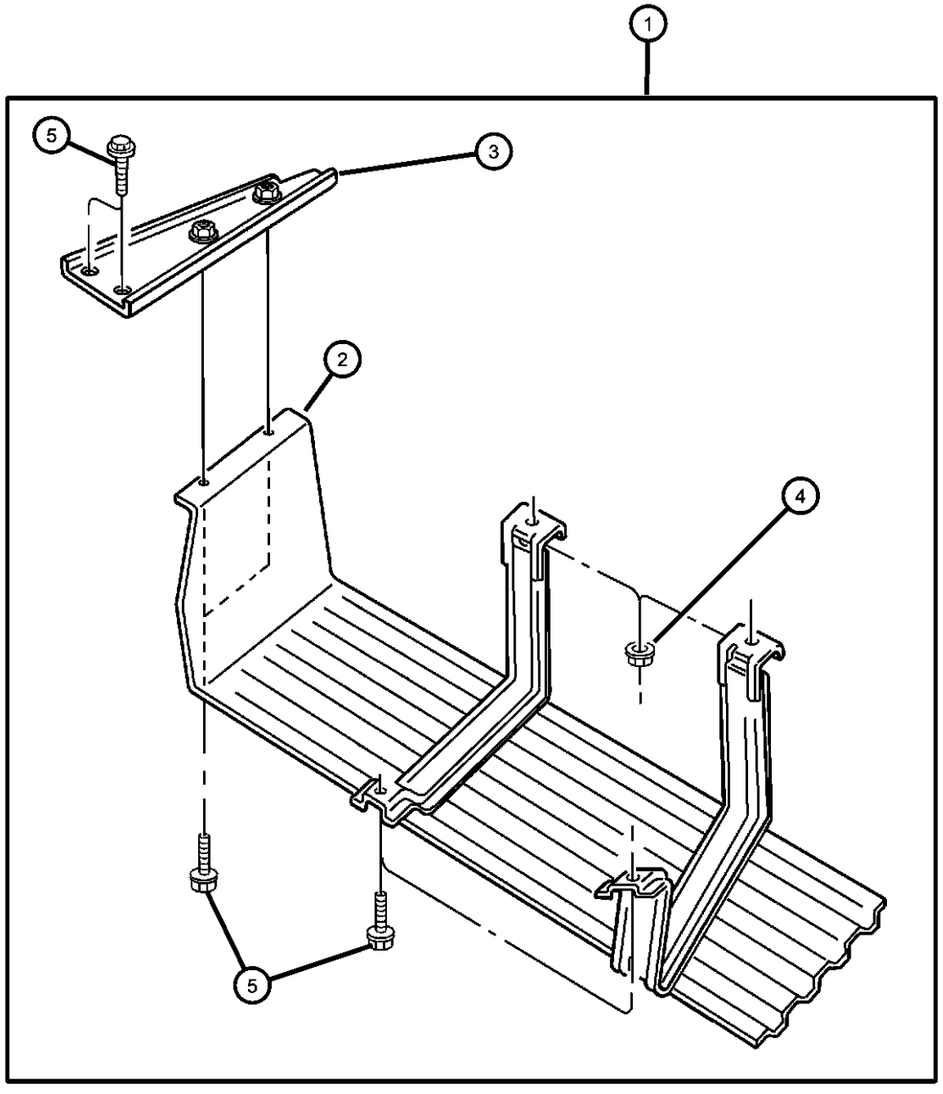

ITEM	PART NUMBER	QTY	LINE	SERIES	BODY	ENGINE	TRANS	TRIM	DESCRIPTION
1	82203839	1	5		31, 61				PLATE PACKAGE, Skid - Fuel Tank
2	04279781	1							PLATE, Fuel Tank Skid
3	04279783AB	1							BRACKET, Fuel Tank Skid Plate
4	06502337	2							NUT, M10x1.5
5	06101787	1	5		31, 61				SCREW, Tapping, M8x20

DAKOTA (AN)

SERIES	LINE	BODY	ENGINE	TRANSMISSION
L = Dakota (All)	1 = Dakota 2WD	61 = Regular Cab (112 WB)	EPE = 2.5L 4 Cylinder	DGK = 4 Speed Automatic 42RE
	5 = Dakota 4WD	31 = Club Cab (131 WB)	EHC = 3.9L 6 Cylinder	DGT = 4 Speed Automatic 46RE
		84 = Quad Cab (131 WB)	EML = 5.0L 8 Cylinder	DDC = 5 Speed HD Manual
			EVA = 4.7L Magnum V8	DDK = 5 Speed HD Manual
			EP0 = All 2.5L	DG4 = Multispeed Automatic 45RFE
			EH0 = All 3.9L	DG0 = All Automatic Transmissions
			EM0 = All 5.9L	DBB = All Manual Transmissions
			EV0 = All 4.7L	

Group - 2

Front Suspension & Drive

002-100 Front Suspension 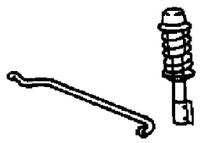	**002-200** Front Axle Drive Shafts 	**002-300** Front Axle Housing 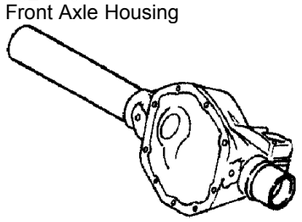	**002-400** Front Axle Assembly 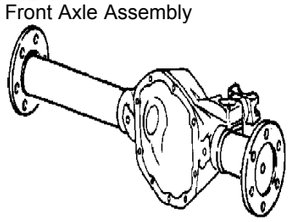
002-600 Front Axle Differential 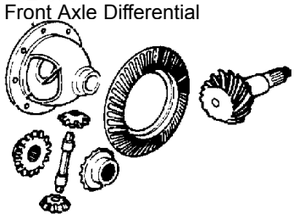	**002-800** Front Axle Skid Plate 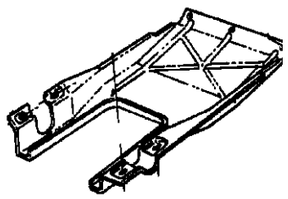		

Group - 2 Front Suspension & Drive

Illustration Title — Group-Fig. No.

Front Suspension
Suspension,Front,Control Arms,Springs,Shocks,Knuckles-AN 1 ..... Fig. 2 - 110
Stabilizer Bar,Front-AN 1 ..... Fig. 2 - 120
Suspension,Front,Control Arms,Shocks,Knuckles-AN 5 ..... Fig. 2 - 130
Stabilizer Bar and Torsion Bar,Front-AN 5 ..... Fig. 2 - 140

Front Axle Drive Shafts
Shaft.Front Drive Axle ..... Fig. 2 - 210

Front Axle Housing
Housing,Front Axle ..... Fig. 2 - 310

Front Axle Assembly
Axle Assembly,Front ..... Fig. 2 - 410

Front Axle Differential
Differential,Front Axle ..... Fig. 2 - 610

Front Axle Skid Plate
Skid Plate,Front Axle ..... Fig. 2 - 810

Suspension,Front,Control Arms,Springs,Shocks,Knuckles-AN 1
Figure 2-110

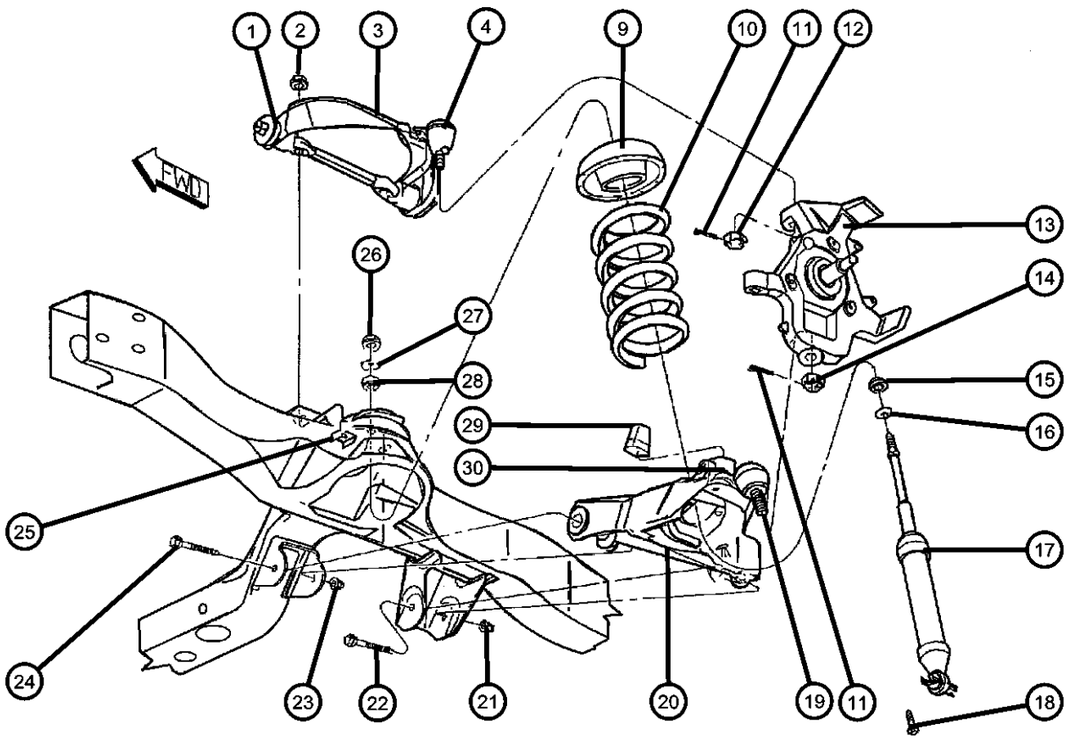

ITEM	PART NUMBER	QTY	LINE	SERIES	BODY	ENGINE	TRANS	TRIM	DESCRIPTION

Note:Sales Codes ;
[EH0]=Engines - All 3.9L V6 Gas
[EM0]=Engines - All 5.9L 8 Cylinder Gas
[EP0]=Engines - All 2.5L 4 Cylinder Gas
[EV0]=Engines - All 4.7L Gas
[SFB]=Shock Absorbers - Front Heavy Duty
[SFD]=Shock Absorbers - Front Extra Heavy Duty
[ZAC] Through [ZRA]= Spring Sales Codes will be Found on Vehicle Identification Number [VIN] Sales Code Listing
[Z1P]=GVW Rating - 5000#
[Z1Q]=GVW Rating - 5350#
[Z1R]=GVW Rating - 5900#

1	52037673	2	1	BUSHING, Control ArmUpper
2	06036048AA	4	1	NUT, Hex Lock, .562 - 18, Pivot Bar Mounting Bolt, Upper Control Arm
3				ARM, Upper Control, Front
	52106160AC	1	1	Complete Assembly, Right
	52106161AB	1	1	Complete Assembly, Left
4	05104816AA	1	1	BALL JOINT PACKAGE, Upper Control ArmRight or Left
-5	06503320	2	1	NUT, Hex Lock, M15x2, Pivot, Upper Control Arm
-6	52038241	2	1	WASHER, Control Arm Shaft, Outer, Upper Front
-7	52038745	1	1	BUMPER, Suspension JounceUpper Control Arm
-8	06504317	1	1	NUT, Hex, Jounce Bumper Mounting, Upper Control Arm
9	52037718	2	1	ISOLATOR, SpringUpper
10				SPRING, Front Coil
	52039198	1	1	[ZBG,ZPG]
	52039199	1	1	[ZBH,ZPH]
	52039200	1	1	[ZBJ,ZPJ]
	52039201	1	1	[ZBK,ZPK]
	52039242	1	1	[ZAC,ZNC]
	52039243	1	1	[ZAD,ZND]
	52039244	1	1	[ZAE,ZNE]
	52039245	1	1	[ZAF,ZNF]
	52039246	1	1	[ZAG,ZNG]
	52039247	1	1	[ZAH,ZNH]

DAKOTA (AN)

SERIES	LINE	BODY	ENGINE	TRANSMISSION
L = Dakota (All)	1 = Dakota 2WD	61 = Regular Cab (112 WB)	EPE = 2.5L 4 Cylinder	DGK = 4 Speed Automatic 42RE
	5 = Dakota 4WD	31 = Club Cab (131 WB)	EHC = 3.9L 6 Cylinder	DGT = 4 Speed Automatic 46RE
		84 = Quad Cab (131 WB)	EML = 5.0L 8 Cylinder	DDC = 5 Speed HD Manual
			EVA = 4.7L Magnum V8	DDK = 5 Speed HD Manual
			EP0 = All 2.5L	DG4 = Multispeed Automatic 45RFE
			EH0 = All 3.9L	DG0 = All Automatic Transmissions
			EM0 = All 5.9L	DBB = All Manual Transmissions
			EV0 = All 4.7L	

AR = use ase required - = Non illustrrated part

Suspension,Front,Control Arms,Springs,Shocks,Knuckles-AN 1
Figure 2-110

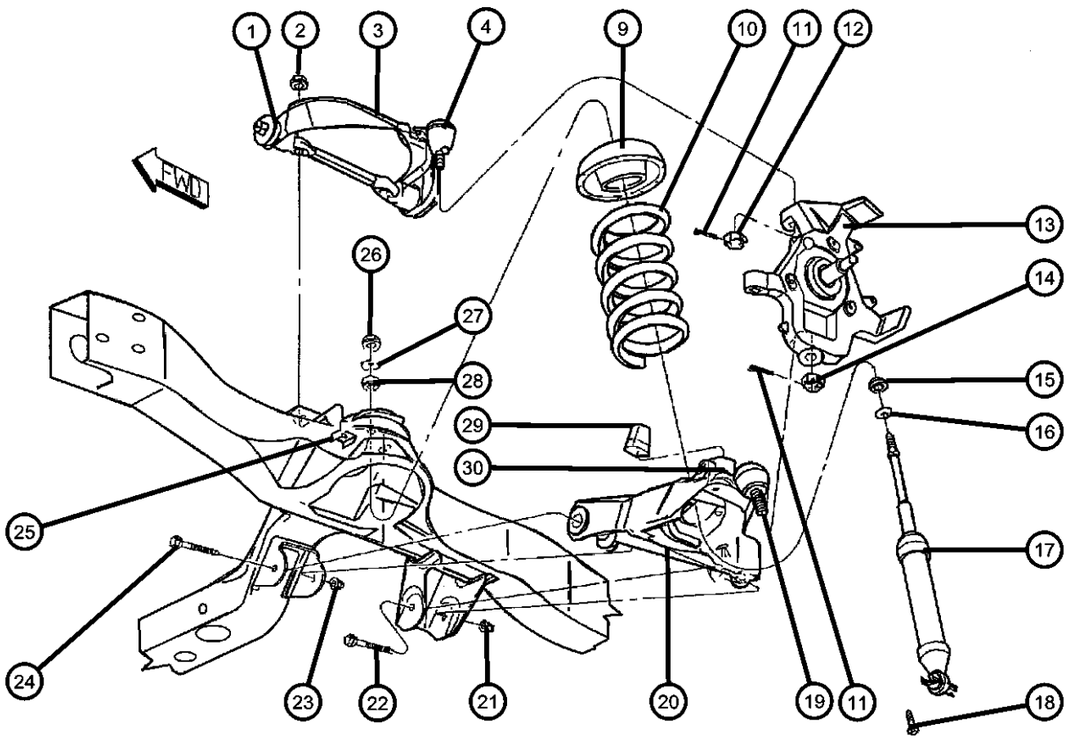

ITEM	PART NUMBER	QTY	LINE	SERIES	BODY	ENGINE	TRANS	TRIM	DESCRIPTION
	52039248	1	1						[ZAJ,ZNJ]
	52039249	1	1						[ZAK,ZNK]
	52106196AA	1	1						[ZBE,ZPE]
	52106197AA	1	1						[ZBF,ZPF]
	52106202	1	1						[ZBL,ZPL]
	52106436AA	1	1		31, 61				[ZCA,ZRA]
11	00120123	2							PIN, Cotter, UCA and LCA Ball Joint Stud
12	06502749	2							NUT, Castle, M14x1.5, Ball Joint Mounting, Upper Control Arm
13									KNUCKLE, Front
	52106508AA	1	1						Right
	52106509AA	1	1						Left
14	06502858	2	1						NUT, Hex, Ball Joint Mounting, Lower Control Arm
15	52106499AA	2							GROMMET, Shock AbsorberLower
16	52038809	2							RETAINER, Shock AbsorberLower
17									SHOCK ABSORBER PACKAGE, Suspension, Front
	04883055AB	2	1		31, 61	EH0			[SFB,Z1P,Z1Q]
	0SGR5609								Rancho Shock
	0SG23318								Mopar V-Line Alternative Part
	04883057AB	2	1		31, 61	EH0			[SFB,Z1R]
	0SG23318								Mopar V-Line Alternative Part
	05011245AC	2	1		31, 61	EP0			[SFB]
	0SGR5609								Rancho Shock
	0SG23318								Mopar V-Line Alternative Part
	05011246AC	2	1		31, 61	EM0			[SFD]
	05015435AD	2	1		31, 61	EV0			[SFB,Z1P,Z1Q]
	0SGR5609								Rancho Shock
	0SG23318								Mopar V-Line Alternative Part
	05015444AD	2	1		84	EH0, EV0			[SFB,Z1R]
	0SG23318								Mopar V-Line Alternative Part
	0SGR5609								Rancho Shock

DAKOTA (AN)

SERIES	LINE	BODY	ENGINE	TRANSMISSION
L = Dakota (All)	1 = Dakota 2WD	61 = Regular Cab (112 WB)	EPE = 2.5L 4 Cylinder	DGK = 4 Speed Automatic 42RE
	5 = Dakota 4WD	31 = Club Cab (131 WB)	EHC = 3.9L 6 Cylinder	DGT = 4 Speed Automatic 46RE
		84 = Quad Cab (131 WB)	EML = 5.0L 8 Cylinder	DDC = 5 Speed HD Manual
			EVA = 4.7L Magnum V8	DDK = 5 Speed HD Manual
			EP0 = All 2.5L	DG4 = Multispeed Automatic 45RFE
			EH0 = All 3.9L	DG0 = All Automatic Transmissions
			EM0 = All 5.9L	DBB = All Manual Transmissions
			EV0 = All 4.7L	

Suspension,Front,Control Arms,Springs,Shocks,Knuckles-AN 1
Figure 2-110

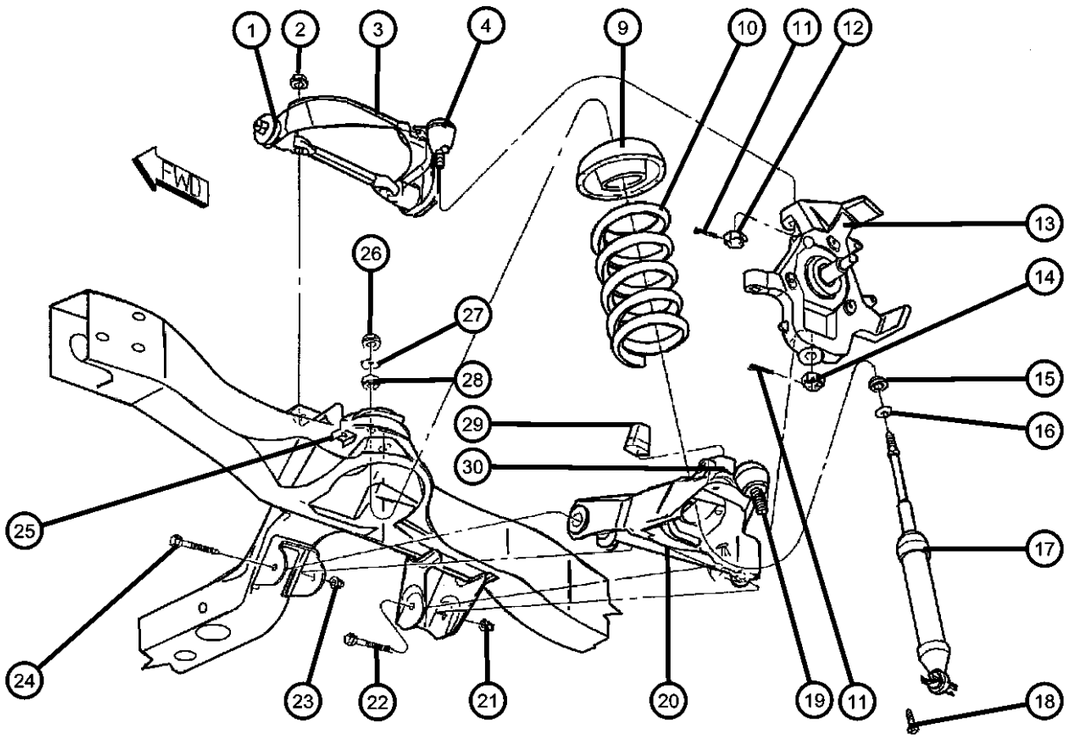

ITEM	PART NUMBER	QTY	LINE	SERIES	BODY	ENGINE	TRANS	TRIM	DESCRIPTION
	05015931AC	2	1		84	EM0			[SFB]
	05016353AB	2	1		31, 61	EV0			[SFB,Z1R]
18	06503792	4	1						SCREW AND WASHER, Hex Head, M8-1.25x32.00, Shock Mounting, Lower
19	05104817AA	1	1						BALL JOINT PACKAGE, Lower Control ArmRight or Left
20									ARM, Lower Control, Front
	52106116AA	1	1						Complete Assembly, Right
	52106117AA	1	1						Complete Assembly, Left
21	06502697	2	1						NUT, Hex Flange Lock, M12x1.75, Rear Pivot Screw Mounting, Lower Control Arm
22	06503965	2	1						SCREW, Hex Flange Head, Rear Pivot, Lower Control Arm
23	06502698	2	1						NUT, Hex Flange Lock, Front Pivot Screw Mounting, Lower Control Arm
24	06505599AA	2	1						SCREW, Pilot Point, Front Pivot, Lower Control Arm
25	06036049AA	4	1						BOLT AND RETAINER, .562-18x2.07, Pivot Bar Mounting, Upper Control Arm
26	06504728	2							NUT AND WASHER, M10x1.5, Shock Mounting, Upper
27	52038805	2							RETAINER, Shock AbsorberUpper
28	52106498AA	2							GROMMET, Shock AbsorberUpper
29	52106438AB	2	1						BUMPER, JounceLower Control Arm
30	52038815	1	1						CUP, Jounce BumperLower Control Arm

DAKOTA (AN)

SERIES	LINE	BODY	ENGINE	TRANSMISSION
L = Dakota (All)	1 = Dakota 2WD	61 = Regular Cab (112 WB)	EPE = 2.5L 4 Cylinder	DGK = 4 Speed Automatic 42RE
	5 = Dakota 4WD	31 = Club Cab (131 WB)	EHC = 3.9L 6 Cylinder	DGT = 4 Speed Automatic 46RE
		84 = Quad Cab (131 WB)	EML = 5.0L 8 Cylinder	DDC = 5 Speed HD Manual
			EVA = 4.7L Magnum V8	DDK = 5 Speed HD Manual
			EP0 = All 2.5L	DG4 = Multispeed Automatic 45RFE
			EH0 = All 3.9L	DG0 = All Automatic Transmissions
			EM0 = All 5.9L	DBB = All Manual Transmissions
			EV0 = All 4.7L	

Stabilizer Bar,Front-AN 1
Figure 2-120

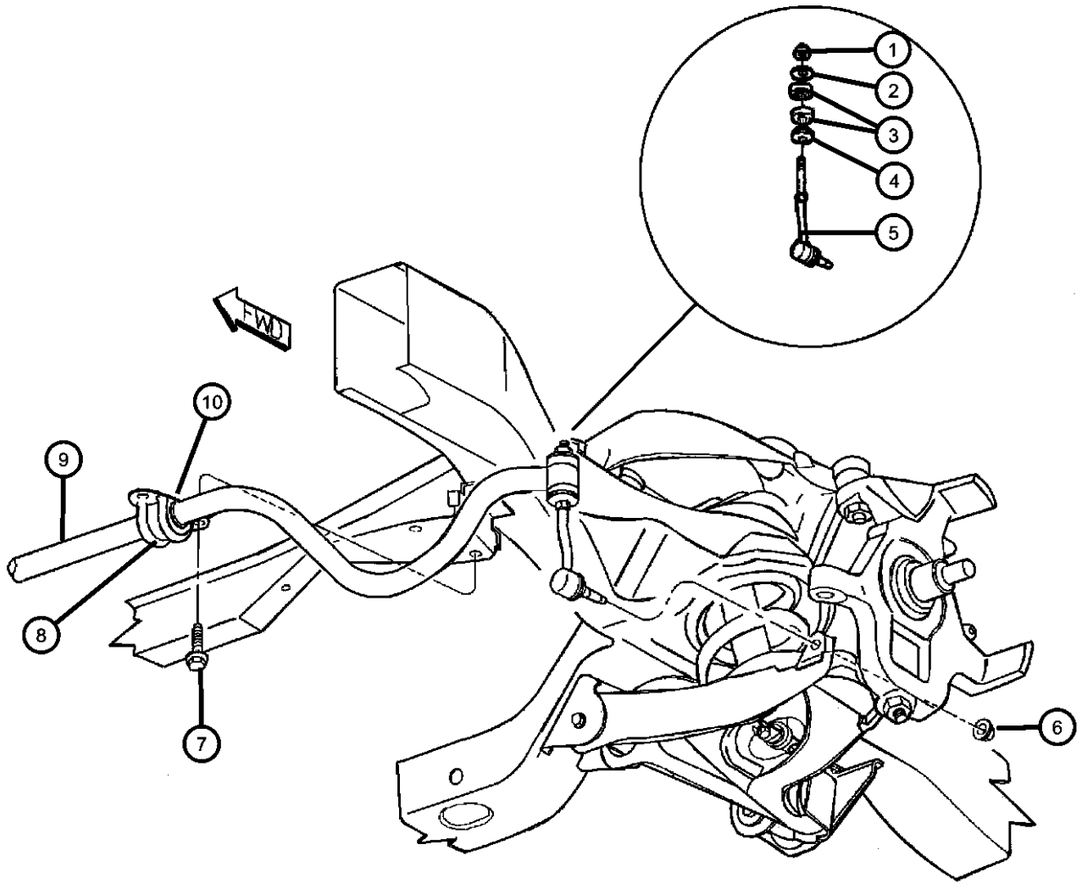

ITEM	PART NUMBER	QTY	LINE	SERIES	BODY	ENGINE	TRANS	TRIM	DESCRIPTION
Note:Sales Codes ; [EH0]=Engines - All 3.9L V6 Gas [EM0]=Engines - All 5.9L 8 Cylinder Gas [EP0]=Engines - All 2.5L 4 Cylinder Gas [EV0]=Engines - All 4.7L Gas									
1									NUT, Hex Lock, M10x1.5
	06506746AA	2	1			EH0, EM0, EV0			
		2	1		31, 61	EP0			
2									RETAINER, Stabilizer Bar Grommet
	52038115	2	1			EH0, EM0, EV0			Large Hole
		2	1		31, 61	EP0			Large Hole
	52038116	2	1			EH0, EM0, EV0			Small Hole
		2	1		31, 61	EP0			Small Hole
3									GROMMET, Link
	52037916	4	1			EH0, EM0, EV0			
		4	1		31, 61	EP0			
4									LINK, Sway Eliminator
	52038736	2	1			EH0, EM0, EV0			
		2	1		31, 61	EP0			
5	06101696	2	1						NUT, Stabilizer Link to LCA, Mounting
6	06506093AA	4	1						SCREW AND WASHER, Hex Head, M10x1.50x35, Stabilizer Retainer to Frame
7									RETAINER, Stabilizer Bar Grommet
	52037710	2	1			EH0, EM0, EV0			Bushing
		2	1		31, 61	EP0			Bushing
8									STABILIZER BAR, Front
	52038864	1	1		31, 61	EP0			
	52106091AB	1	1			EH0, EM0, EV0			
9									BUSHING, Stabilizer Bar

DAKOTA (AN)

SERIES	LINE	BODY	ENGINE	TRANSMISSION
L = Dakota (All)	1 = Dakota 2WD 5 = Dakota 4WD	61 = Regular Cab (112 WB) 31 = Club Cab (131 WB) 84 = Quad Cab (131 WB)	EPE = 2.5L 4 Cylinder EHC = 3.9L 6 Cylinder EML = 5.0L 8 Cylinder EVA = 4.7L Magnum V8 EP0 = All 2.5L EH0 = All 3.9L EM0 = All 5.9L EV0 = All 4.7L	DGK = 4 Speed Automatic 42RE DGT = 4 Speed Automatic 46RE DDC = 5 Speed HD Manual DDK = 5 Speed HD Manual DG4 = Multispeed Automatic 45RFE DG0 = All Automatic Transmissions DBB = All Manual Transmissions

Stabilizer Bar,Front-AN 1
Figure 2-120

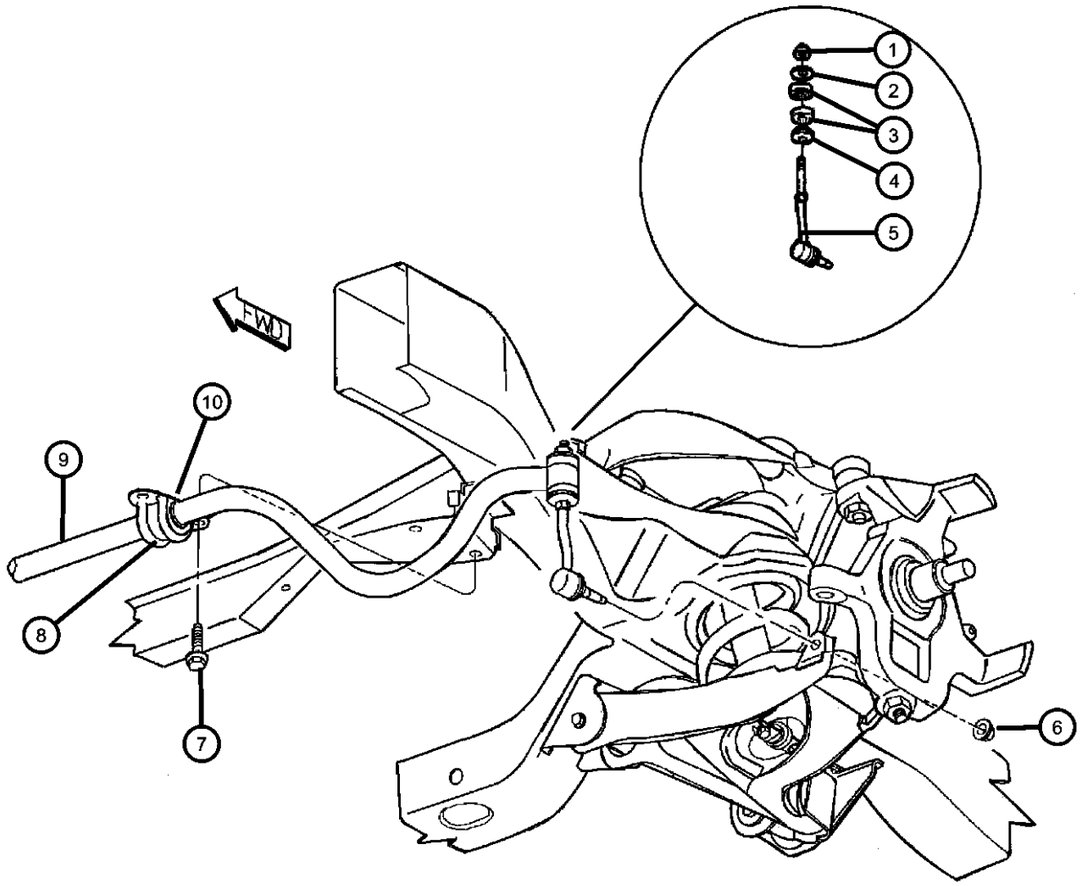

ITEM	PART NUMBER	QTY	LINE	SERIES	BODY	ENGINE	TRANS	TRIM	DESCRIPTION
	52038975	2	1		31, 61	EP0			
	52106092AA	2	1			EH0, EM0, EV0			

DAKOTA (AN)

SERIES	LINE	BODY	ENGINE	TRANSMISSION
L = Dakota (All)	1 = Dakota 2WD	61 = Regular Cab (112 WB)	EPE = 2.5L 4 Cylinder	DGK = 4 Speed Automatic 42RE
	5 = Dakota 4WD	31 = Club Cab (131 WB)	EHC = 3.9L 6 Cylinder	DGT = 4 Speed Automatic 46RE
		84 = Quad Cab (131 WB)	EML = 5.0L 8 Cylinder	DDC = 5 Speed HD Manual
			EVA = 4.7L Magnum V8	DDK = 5 Speed HD Manual
			EP0 = All 2.5L	DG4 = Multispeed Automatic 45RFE
			EH0 = All 3.9L	DG0 = All Automatic Transmissions
			EM0 = All 5.9L	DBB = All Manual Transmissions
			EV0 = All 4.7L	

Suspension,Front,Control Arms,Shocks,Knuckles-AN 5
Figure 2-130

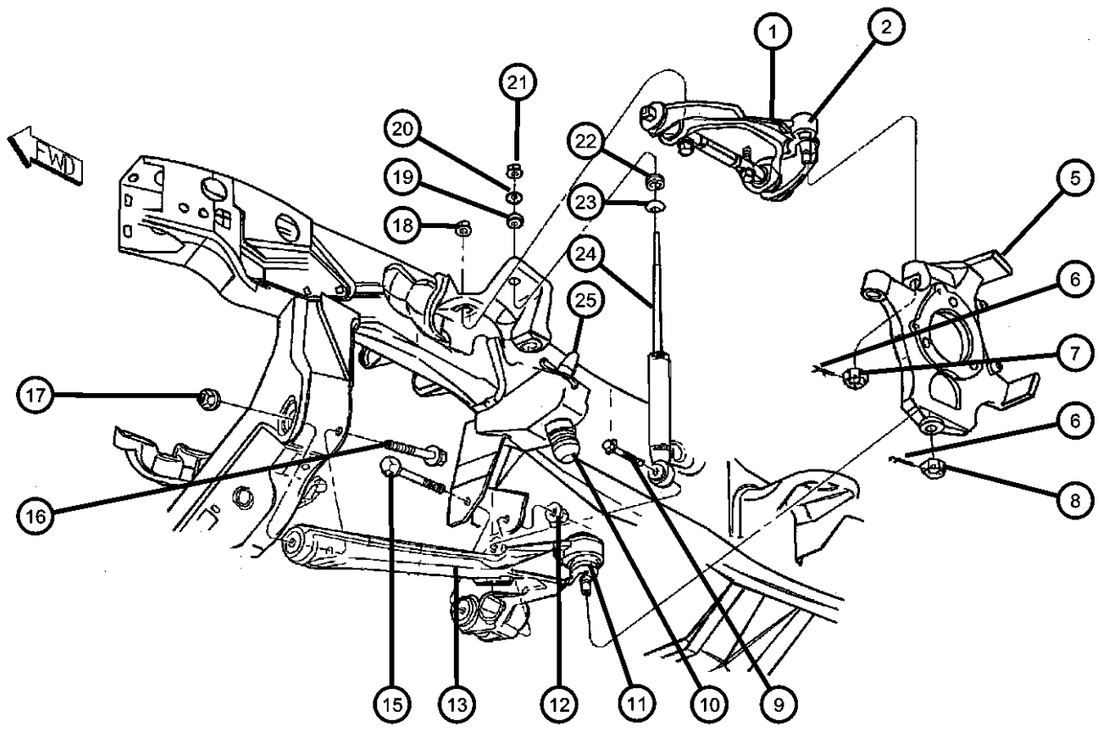

ITEM	PART NUMBER	QTY	LINE	SERIES	BODY	ENGINE	TRANS	TRIM	DESCRIPTION
Note:Sales Codes ;									
[EH0]=Engines - All 3.9L V6 Gas									
[EM0]=Engines - All 5.9L 8 Cylinder Gas									
[EV0]=Engines - All 4.7L Gas									
[SFB]=Shock Absorbers - Front Heavy Duty									
[Z5M]=GVW Rating -5400#									
[Z5N]=GVW Rating - 5600#									
[Z5P]=GVW Rating - 5900#									
1									ARM, Control
	52106386AB	1	5						Complete Assembly, Upper Right
	52106387AB	1	5						Complete Assembly, Upper Left
2	05104816AA	1	5						BALL JOINT PACKAGE, Upper Control ArmRight or Left
-3	03815704	2	5						RETAINER, Control Arm Bushing
-4	06503975	2	5						NUT, Hex Lock, M14 x 2.00Upper Control Arm
5									KNUCKLE, Front
	52106406AB	1	5						Right
	52106407AB	1	5						Left
6	00120123	2							PIN, Cotter, Ball Joint Stud, Upper or Lower
7	06502749	2							NUT, Castle, M14x1.5, Mounting, Ball Joint Stud
8	06502858	2	5						NUT, Hex, Mounting, Ball Joint Stud
9	06101971	2	5						SCREW AND WASHER, Shock Mounting, Lower
10	52038558	2	5						BUMPER, JounceFront Suspension
11	52106222AA	1	5						BALL JOINT, Lower Control ArmRight or Left
12	06502698	2	5						NUT, Hex Flange Lock, Rear Pivot Screw Mounting, Lower Control Arm
13									ARM, Control
	52106396AA	1	5						Complete Assembly, Lower Right
	52106397AA	1	5						Complete Assembly, Lower Left
-14	09412281	1	5						PIN, Spring, .250 x 1.00Torsion Bar Locator
15	06504109	2	5						SCREW, Hex Flange Head, M14x2x110, Rear Pivot Mounting, Lower Control Arm

DAKOTA (AN)

SERIES	LINE	BODY	ENGINE	TRANSMISSION
L = Dakota (All)	1 = Dakota 2WD	61 = Regular Cab (112 WB)	EPE = 2.5L 4 Cylinder	DGK = 4 Speed Automatic 42RE
	5 = Dakota 4WD	31 = Club Cab (131 WB)	EHC = 3.9L 6 Cylinder	DGT = 4 Speed Automatic 46RE
		84 = Quad Cab (131 WB)	EML = 5.0L 8 Cylinder	DDC = 5 Speed HD Manual
			EVA = 4.7L Magnum V8	DDK = 5 Speed HD Manual
			EP0 = All 2.5L	DG4 = Multispeed Automatic 45RFE
			EH0 = All 3.9L	DG0 = All Automatic Transmissions
			EM0 = All 5.9L	DBB = All Manual Transmissions
			EV0 = All 4.7L	

Suspension,Front,Control Arms,Shocks,Knuckles-AN 5
Figure 2-130

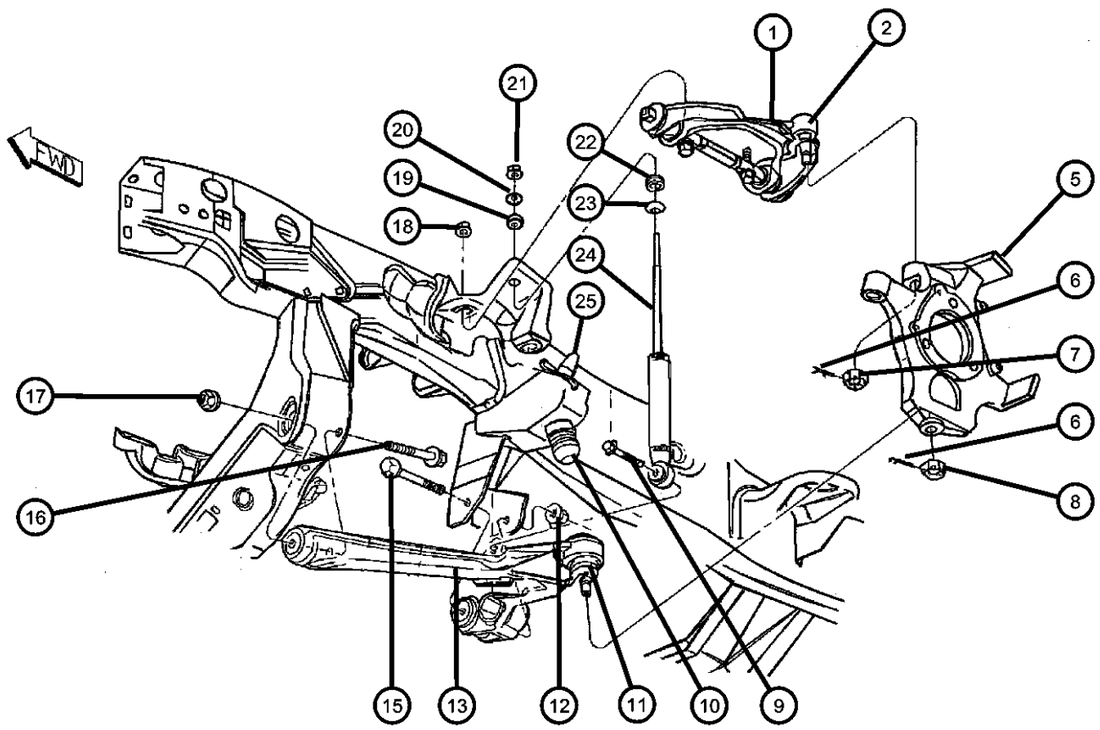

ITEM	PART NUMBER	QTY	LINE	SERIES	BODY	ENGINE	TRANS	TRIM	DESCRIPTION
16	06506021AA	2	5						SCREW, Hex Flange Head, M12X1.75X110.00, Front Pivot Mounting, Lower Control Arm
17	06502697	2	5						NUT, Hex Flange Lock, M12x1.75, Front Pivot Screw Mounting, Lower Control Arm
18	06504707	4	5						NUT, Pivot Bar Mounting Bolt, Upper Control Arm
19	52106498AA	2							GROMMET, Shock AbsorberUpper
20	52038805	2							RETAINER, Shock AbsorberUpper
21	06504728	2							NUT AND WASHER, M10x1.5, Shock Mounting, Upper
22	52106499AA	2							GROMMET, Shock AbsorberLower
23	52038809	2							RETAINER, Shock AbsorberLower
24									SHOCK ABSORBER PACKAGE, Suspension, Front
	05015442AD	2	5		31, 61	EH0			[SFB,Z5M,Z5N]
	0SGR5019								Rancho Shock
	0SG23387								Mopar V-Line Alternative Part
	05015443AD	2	5		31, 61	EM0, EV0			[SFB,Z5M,Z5N]
	0SGR5019								Rancho Shock
	0SG23387								Mopar V-Line Alternative Part
	05015445AD	2	5		84				[SFB]
	0SGR5019								Rancho Shock
	0SG23387								Mopar V-Line Alternative Part
	05016354AB	2	5		31, 61	EH0			[SFB,Z5P]
	05016355AB	2	5		31, 61	EM0, EV0			[SFB,Z5P]
	0SGR5019								Rancho Shock
	0SG23387								Mopar V-Line Alternative Part
25	52038781	2	5						BUMPER, Jounce

DAKOTA (AN)

SERIES	LINE	BODY	ENGINE	TRANSMISSION
L = Dakota (All)	1 = Dakota 2WD 5 = Dakota 4WD	61 = Regular Cab (112 WB) 31 = Club Cab (131 WB) 84 = Quad Cab (131 WB)	EPE = 2.5L 4 Cylinder EHC = 3.9L 6 Cylinder EML = 5.0L 8 Cylinder EVA = 4.7L Magnum V8 EP0 = All 2.5L EH0 = All 3.9L EM0 = All 5.9L EV0 = All 4.7L	DGK = 4 Speed Automatic 42RE DGT = 4 Speed Automatic 46RE DDC = 5 Speed HD Manual DDK = 5 Speed HD Manual DG4 = Multispeed Automatic 45RFE DG0 = All Automatic Transmissions DBB = All Manual Transmissions

Stabilizer Bar and Torsion Bar,Front-AN 5
Figure 2-140

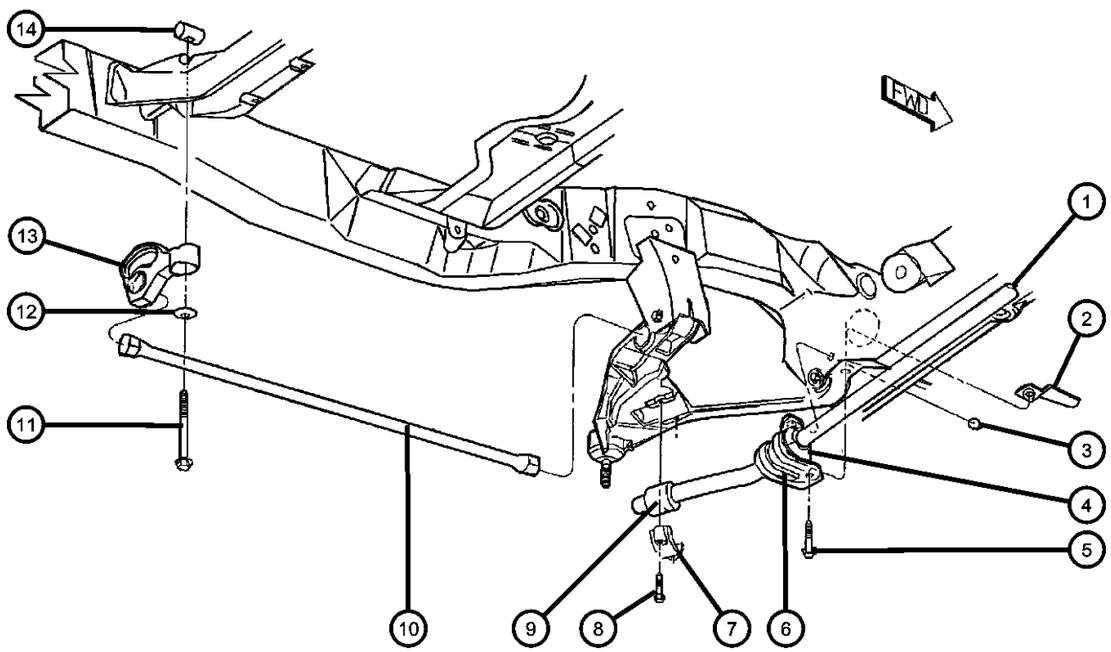

ITEM	PART NUMBER	QTY	LINE	SERIES	BODY	ENGINE	TRANS	TRIM	DESCRIPTION
Note:Sales Codes ; [ZSA] Through [ZEA]= Torsion Bar Sales Codes will be Found on Vehicle Identification Number [VIN] Sales Code Listing									
1									BAR, Front Sway
	52106324AA	1	5		31, 61				
	52106378AA	1	5		84				
2	06502697	2	5						NUT, Hex Flange Lock, M12x1.75, Stabilizer Retainer to Crossmember, Mounting
3	06502698	2	5						NUT, Hex Flange Lock, Upper Sill Bushing, Mounting
4									BUSHING, Stabilizer Bar
	52106420AA	2	5		84				Inner
	52106427AA	2	5		31, 61				Inner
5	06502559	2	5						SCREW, Hex Flange Head, M12x1.75x40.00, Stabilizer Bar Retainer, Mounting
6									RETAINER, Stabilizer Bar Grommet
	52106682AA	2	5		84				Inner
		2	5		31, 61				Inner
7	52106379AA	2	5						CLAMP, Stabilizer Shaft Bushing, Stabilizer Bar to LCA, Mounting
8	06101980	4	5						SCREW AND WASHER, Hex Head, M8x1.25x45, Stabilizer Bar Clamp, Mounting
9									CUSHION, Sway Eliminator
	52106332AA	2	5		31, 61				Outer
	52106421AA	2	5		84				Outer
10									BAR, Torsion
	52106640AA	1	5						[ZSA], Right
	52106641AA	1	5						[ZDA], Left
	52106642AA	1	5						[ZTA], Right
	52106643AA	1	5						[ZEA], Left
11	06035925AA	2	5						SCREW, Hex Head, .625-11x5.75, Torsion Bar Rear Anchor
12	04014100	2	5						BEARING, Torsion Bar, Torsion Bar Rear Anchor Adjust Bolt

DAKOTA (AN)

SERIES	LINE	BODY	ENGINE	TRANSMISSION
L = Dakota (All)	1 = Dakota 2WD	61 = Regular Cab (112 WB)	EPE = 2.5L 4 Cylinder	DGK = 4 Speed Automatic 42RE
	5 = Dakota 4WD	31 = Club Cab (131 WB)	EHC = 3.9L 6 Cylinder	DGT = 4 Speed Automatic 46RE
		84 = Quad Cab (131 WB)	EML = 5.0L 8 Cylinder	DDC = 5 Speed HD Manual
			EVA = 4.7L Magnum V8	DDK = 5 Speed HD Manual
			EP0 = All 2.5L	DG4 = Multispeed Automatic 45RFE
			EH0 = All 3.9L	DG0 = All Automatic Transmissions
			EM0 = All 5.9L	DBB = All Manual Transmissions
			EV0 = All 4.7L	

Stabilizer Bar and Torsion Bar,Front-AN 5
Figure 2-140

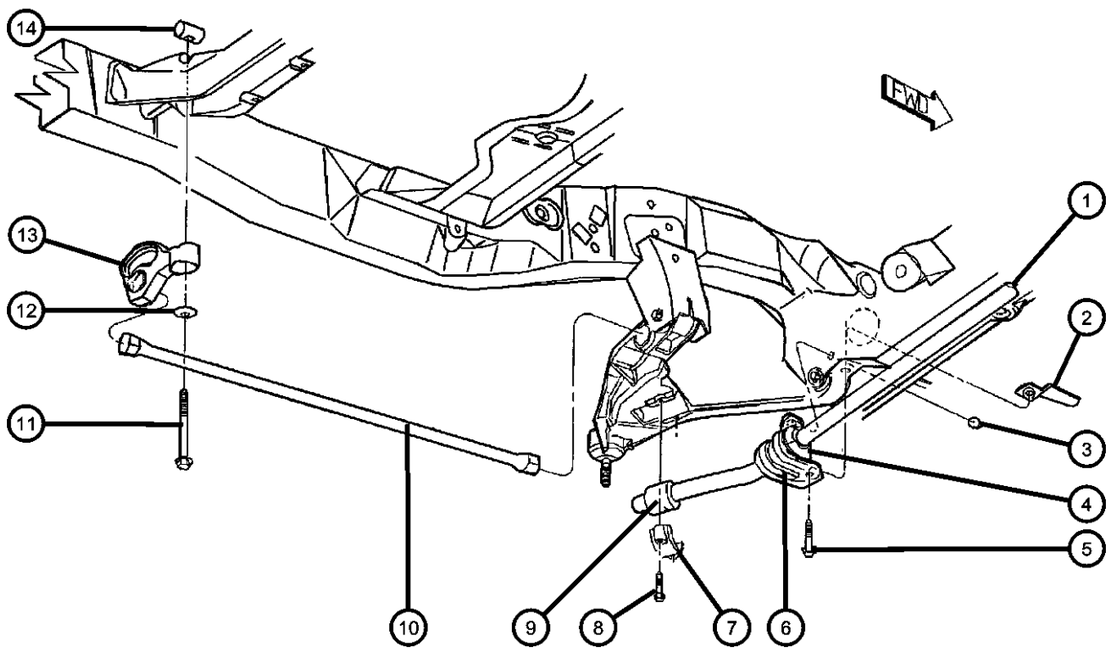

ITEM	PART NUMBER	QTY	LINE	SERIES	BODY	ENGINE	TRANS	TRIM	DESCRIPTION
13	52113061AB	2	5						ANCHOR, Torsion Bar, Front Adjustment
14	04322561	2	5						SWIVEL, Torsion Bar, Torsion Bar Rear Anchor Adjust Bolt

DAKOTA (AN)

SERIES	LINE	BODY	ENGINE	TRANSMISSION
L = Dakota (All)	1 = Dakota 2WD	61 = Regular Cab (112 WB)	EPE = 2.5L 4 Cylinder	DGK = 4 Speed Automatic 42RE
	5 = Dakota 4WD	31 = Club Cab (131 WB)	EHC = 3.9L 6 Cylinder	DGT = 4 Speed Automatic 46RE
		84 = Quad Cab (131 WB)	EML = 5.0L 8 Cylinder	DDC = 5 Speed HD Manual
			EVA = 4.7L Magnum V8	DDK = 5 Speed HD Manual
			EP0 = All 2.5L	DG4 = Multispeed Automatic 45RFE
			EH0 = All 3.9L	DG0 = All Automatic Transmissions
			EM0 = All 5.9L	DBB = All Manual Transmissions
			EV0 = All 4.7L	

Shaft.Front Drive Axle
Figure 2-210

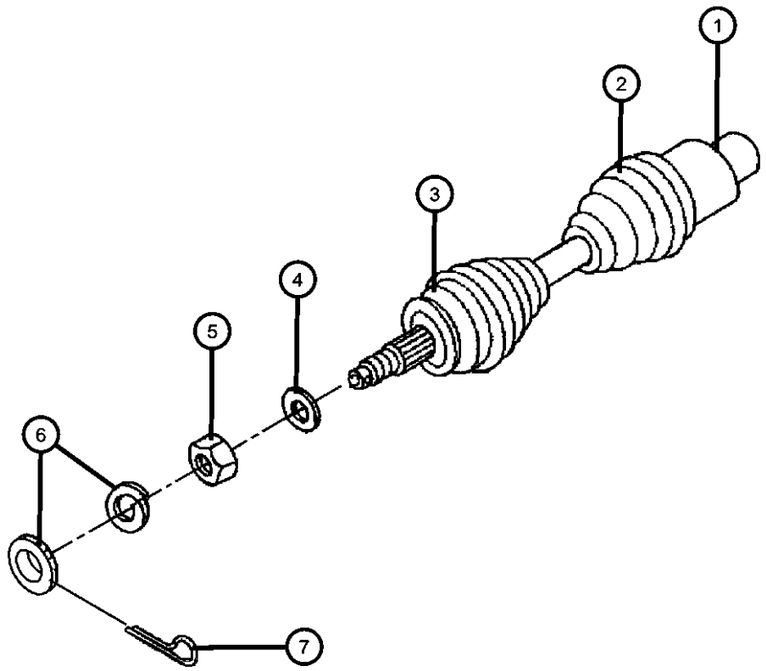

ITEM	PART NUMBER	QTY	LINE	SERIES	BODY	ENGINE	TRANS	TRIM	DESCRIPTION
1	05072214AA	2	5						SHAFT, Axle Half
2	05015966AA	2	5						BOOT KIT, Half Shaft, Inner
3	05015967AA	2	5						BOOT KIT, Half Shaft, Outer
4	06502293	2	5						WASHER, Flat, M23x43x4
5	06502294	2	5						NUT, Hex Flange, M22x1.25
6	04293167	2	5						NUT AND WASHER PACKAGE, Front Hub
7	06500336	2	5						PIN, Cotter, M5x36.00

DAKOTA (AN)

SERIES	LINE	BODY	ENGINE	TRANSMISSION
L = Dakota (All)	1 = Dakota 2WD	61 = Regular Cab (112 WB)	EPE = 2.5L 4 Cylinder	DGK = 4 Speed Automatic 42RE
	5 = Dakota 4WD	31 = Club Cab (131 WB)	EHC = 3.9L 6 Cylinder	DGT = 4 Speed Automatic 46RE
		84 = Quad Cab (131 WB)	EML = 5.0L 8 Cylinder	DDC = 5 Speed HD Manual
			EVA = 4.7L Magnum V8	DDK = 5 Speed HD Manual
			EP0 = All 2.5L	DG4 = Multispeed Automatic 45RFE
			EH0 = All 3.9L	DG0 = All Automatic Transmissions
			EM0 = All 5.9L	DBB = All Manual Transmissions
			EV0 = All 4.7L	

Housing,Front Axle
Figure 2-310

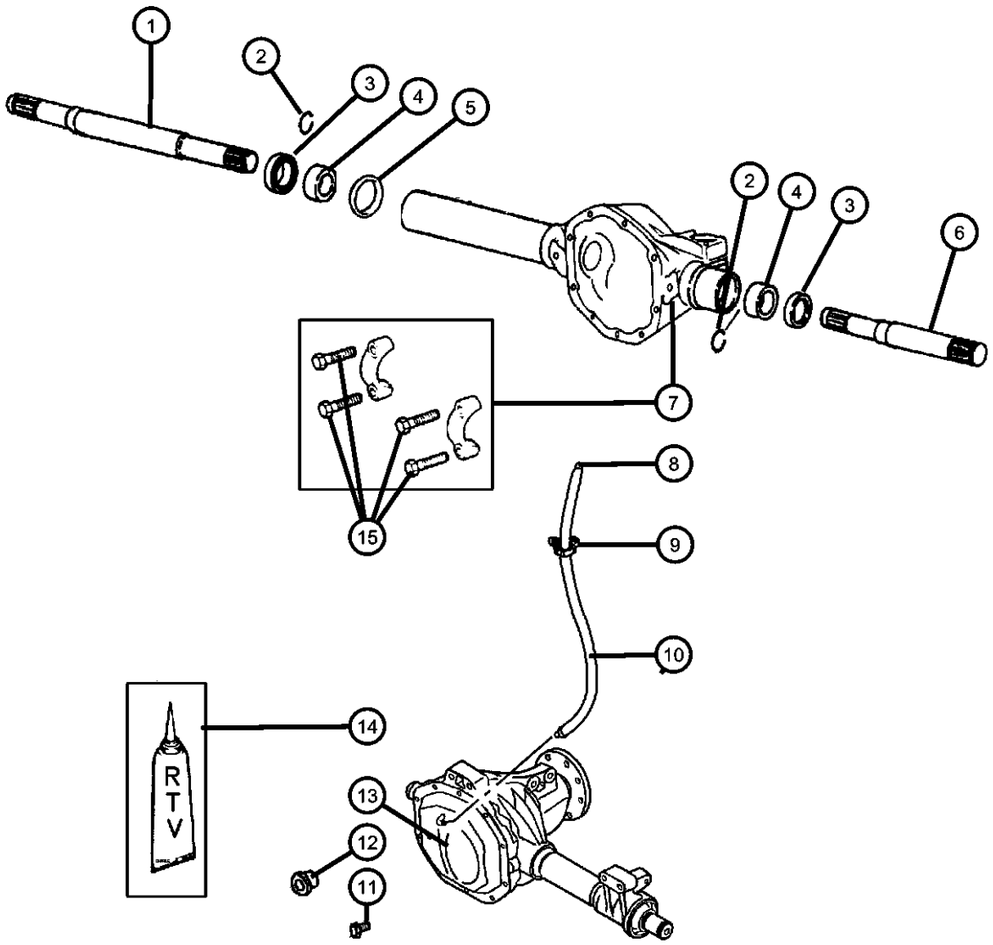

ITEM	PART NUMBER	QTY	LINE	SERIES	BODY	ENGINE	TRANS	TRIM	DESCRIPTION
1	52069708AC	1	5						SHAFT, AxleRight, Intermediate
2	52069710AB	2	5						SNAP RING, Axle ShaftRight or Left
3	52069706	2	5						SEAL, Axle Drive ShaftRight or Left
4	52111167AA	1	5						BUSHING, Axle ShaftRight or Left
5	52069888AA	2	5						O RING, Shaft DisconnectRight or Left
6	52069711AC	1	5						SHAFT, AxleLeft, Intermediate
7	05015892AA	1	5						HOUSING, Axle, Includes Item 15
8	J5352955	1	5						VENT, Axle
9	J5352955	1							CLIP, Wiring, (NOT SERVICED)
10	52069960AC	1	5						HOSE, Axle Vent, Includes Item 8
11	06505216AA	12	5						BOLT, Differential Cover
12	52070428AA	1	5						PLUG, Differential Cover
13	52069713	1	5						COVER, Differential, with Vent
14	05010884AA	1	5						SEALANT, RTV, Cover, Differential
15	06100954	4	5						BOLT, Differential, Carrier Bearing Cap, Mounting

DAKOTA (AN)

SERIES	LINE	BODY	ENGINE	TRANSMISSION
L = Dakota (All)	1 = Dakota 2WD	61 = Regular Cab (112 WB)	EPE = 2.5L 4 Cylinder	DGK = 4 Speed Automatic 42RE
	5 = Dakota 4WD	31 = Club Cab (131 WB)	EHC = 3.9L 6 Cylinder	DGT = 4 Speed Automatic 46RE
		84 = Quad Cab (131 WB)	EML = 5.0L 8 Cylinder	DDC = 5 Speed HD Manual
			EVA = 4.7L Magnum V8	DDK = 5 Speed HD Manual
			EP0 = All 2.5L	DG4 = Multispeed Automatic 45RFE
			EH0 = All 3.9L	DG0 = All Automatic Transmissions
			EM0 = All 5.9L	DBB = All Manual Transmissions
			EV0 = All 4.7L	

AR = use ase required - = Non illustrrated part

Axle Assembly,Front
Figure 2-410

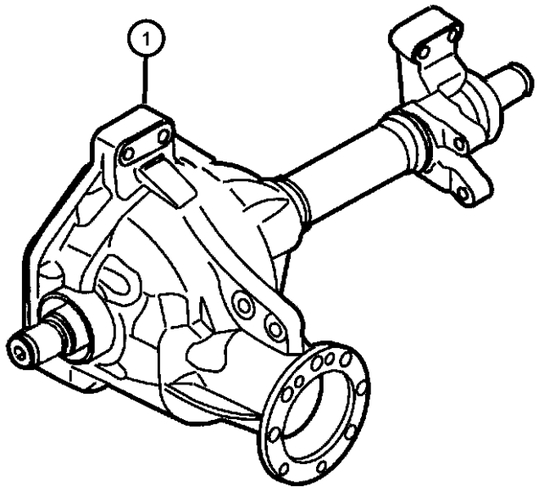

ITEM	PART NUMBER	QTY	LINE	SERIES	BODY	ENGINE	TRANS	TRIM	DESCRIPTION
Note:Sales Codes;									
[DMD]=Axle Ratio - 3.55									
[DMH]=Axle Ratio - 3.92									
1									AXLE, Service Front
	52069680AD	1	5						[DMD]
	52069862AD	1	5						[DMH]

DAKOTA (AN)

SERIES	LINE	BODY	ENGINE	TRANSMISSION
L = Dakota (All)	1 = Dakota 2WD	61 = Regular Cab (112 WB)	EPE = 2.5L 4 Cylinder	DGK = 4 Speed Automatic 42RE
	5 = Dakota 4WD	31 = Club Cab (131 WB)	EHC = 3.9L 6 Cylinder	DGT = 4 Speed Automatic 46RE
		84 = Quad Cab (131 WB)	EML = 5.0L 8 Cylinder	DDC = 5 Speed HD Manual
			EVA = 4.7L Magnum V8	DDK = 5 Speed HD Manual
			EP0 = All 2.5L	DG4 = Multispeed Automatic 45RFE
			EH0 = All 3.9L	DG0 = All Automatic Transmissions
			EM0 = All 5.9L	DBB = All Manual Transmissions
			EV0 = All 4.7L	

Differential,Front Axle
Figure 2-610

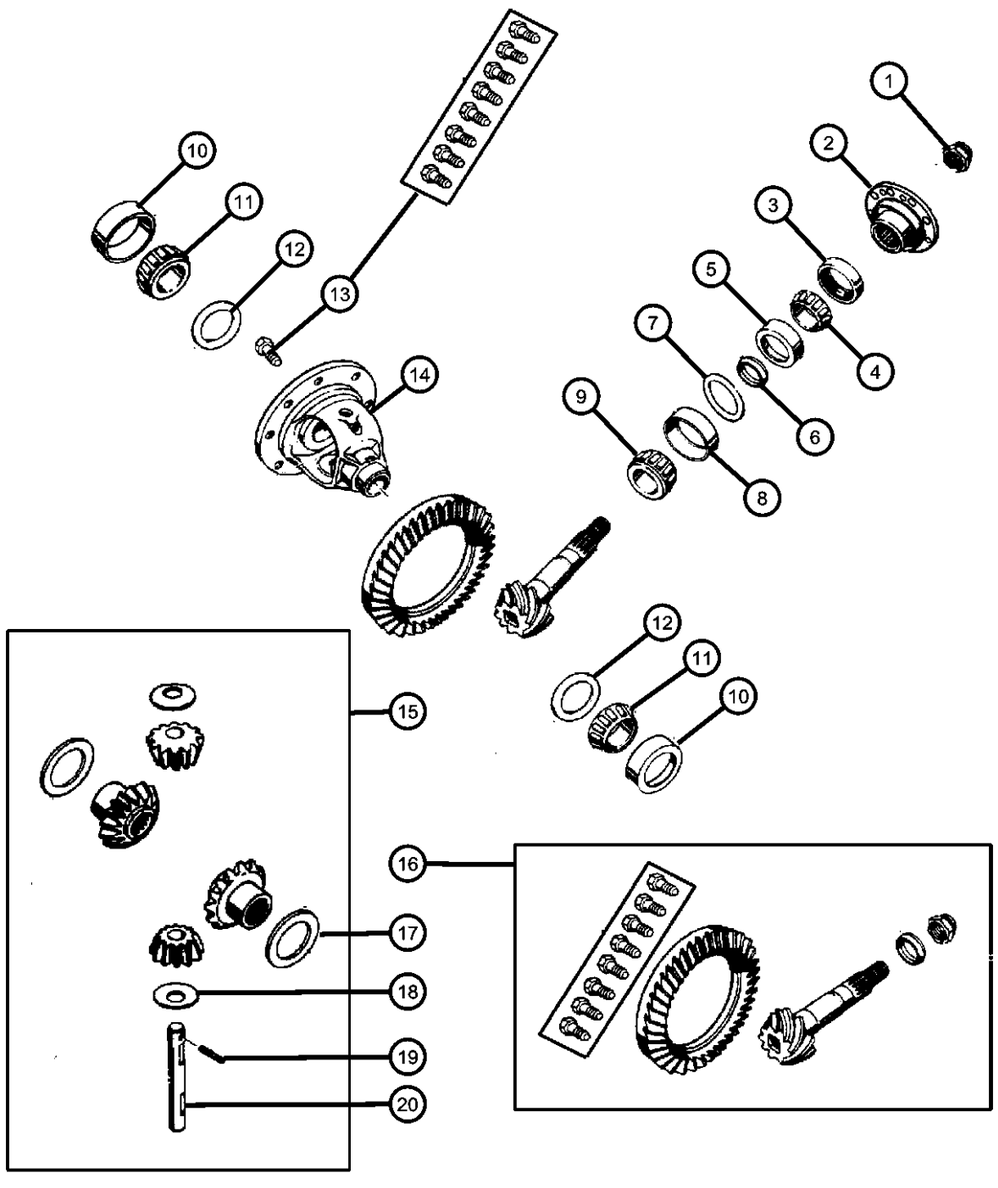

ITEM	PART NUMBER	QTY	LINE	SERIES	BODY	ENGINE	TRANS	TRIM	DESCRIPTION
Note:Sales Codes; [DMD]=Axle Ratio - 3.55 [DMH]=Axle Ratio - 3.92									
1	06036150AA	1	5						NUT, Hex, .875-14
2	52105400AA	1	5						FLANGE, Driveshaft Yoke
3	52069700	1	5						SEAL, Drive Pinion
4	01820552	1	5						BEARING, Drive PinionFront
5	01820551	1	5						CUP, Pinion BearingFront
6	03507678	1	5						SPACER, Drive Pinion Bearing, Crush
7									SHIM PACKAGE, Pinion
	05015874AA	1	5						0.94MM to 1.27MM
	05015875AA	1	5						1.30MM to 1.57MM
	05015876AA	1	5						0.64MM to 0.91MM
8	52069693	1	5						CUP, Pinion BearingRear
9	52069691	1	5						BEARING, Drive PinionRear
10	52069916AA	2	5						CUP, Differential Side
11	52069915AA	2	5						BEARING, Differential
12									SHIM PACKAGE, Differential
	05015884AA	1	5						2.82MM to 3.05MM
	05015885AA	1	5						3.07MM to 3.35MM
	05015886AA	1	5						3.38MM to 3.66MM
	05015887AA	1	5						3.68MM to 3.96MM
	05015888AA	1	5						3.99MM to 4.27MM
	05015889AA	1	5						4.29MM to 4.57MM
	05015890AA	1	5						4.60MM to 4.88MM
13	04443158	1	5						SCREW PACKAGE, Axle Drive Gear
14	52069908AA	1	5						CASE, Differential, Includes Item 15
15	05015870AA	1	5						GEAR PACKAGE, Differential
16									GEAR KIT, Ring And Pinion
	05015873AA	1	5						[DMD]
	05015895AA	1	5						[DMH]
17	05015864AA	1	5						WASHER PACKAGE, Side Gear Thrust

DAKOTA (AN)

SERIES	LINE	BODY	ENGINE	TRANSMISSION
L = Dakota (All)	1 = Dakota 2WD 5 = Dakota 4WD	61 = Regular Cab (112 WB) 31 = Club Cab (131 WB) 84 = Quad Cab (131 WB)	EPE = 2.5L 4 Cylinder EHC = 3.9L 6 Cylinder EML = 5.0L 8 Cylinder EVA = 4.7L Magnum V8 EP0 = All 2.5L EH0 = All 3.9L EM0 = All 5.9L EV0 = All 4.7L	DGK = 4 Speed Automatic 42RE DGT = 4 Speed Automatic 46RE DDC = 5 Speed HD Manual DDK = 5 Speed HD Manual DG4 = Multispeed Automatic 45RFE DG0 = All Automatic Transmissions DBB = All Manual Transmissions

Differential,Front Axle
Figure 2-610

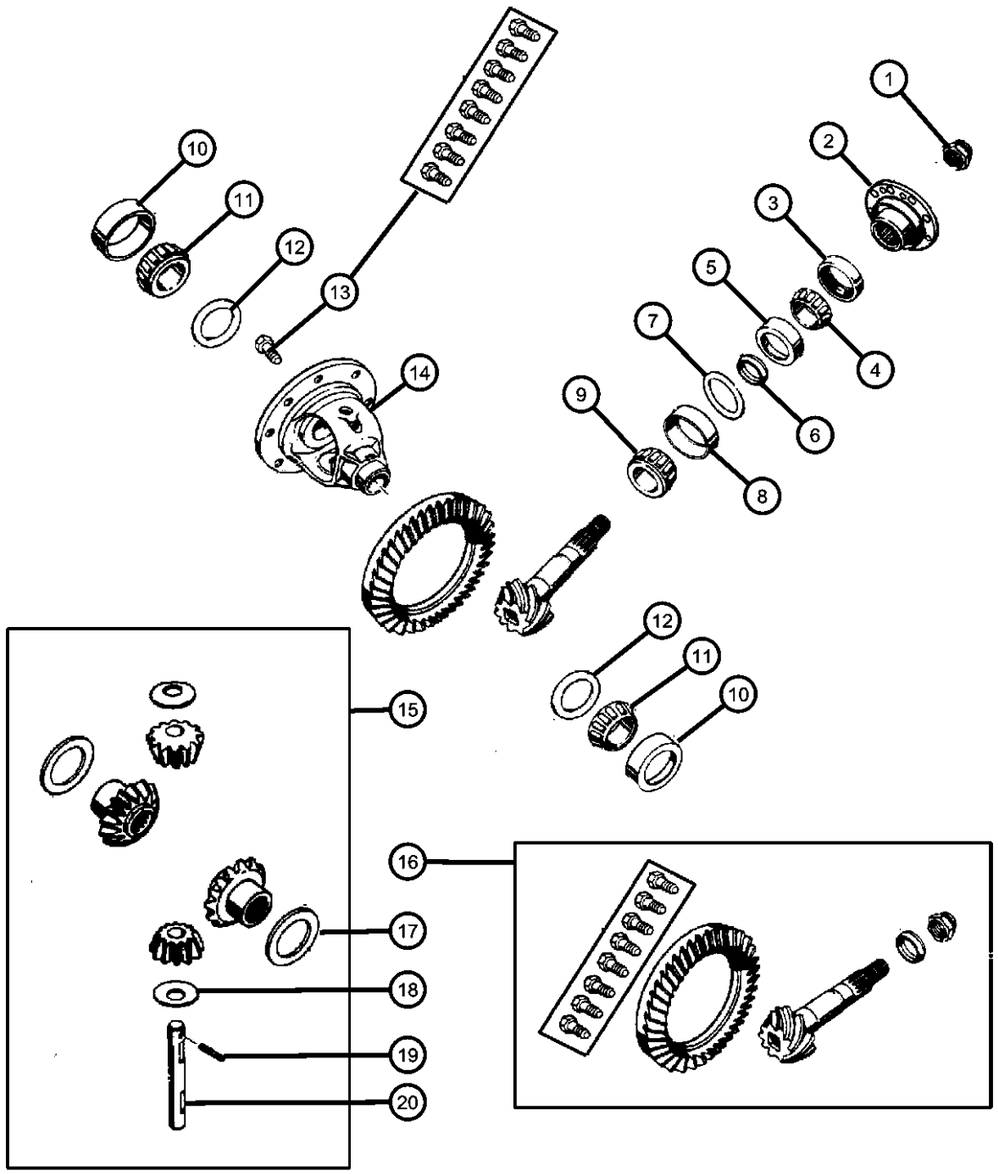

ITEM	PART NUMBER	QTY	LINE	SERIES	BODY	ENGINE	TRANS	TRIM	DESCRIPTION
18	02852912	2	5						WASHER, Pinion Thrust
19	52070338AA	1	5						PIN, Differential Shaft
20	52069657	1	5						SHAFT, Differential Pinion

DAKOTA (AN)

SERIES	LINE	BODY	ENGINE	TRANSMISSION
L = Dakota (All)	1 = Dakota 2WD	61 = Regular Cab (112 WB)	EPE = 2.5L 4 Cylinder	DGK = 4 Speed Automatic 42RE
	5 = Dakota 4WD	31 = Club Cab (131 WB)	EHC = 3.9L 6 Cylinder	DGT = 4 Speed Automatic 46RE
		84 = Quad Cab (131 WB)	EML = 5.0L 8 Cylinder	DDC = 5 Speed HD Manual
			EVA = 4.7L Magnum V8	DDK = 5 Speed HD Manual
			EP0 = All 2.5L	DG4 = Multispeed Automatic 45RFE
			EH0 = All 3.9L	DG0 = All Automatic Transmissions
			EM0 = All 5.9L	DBB = All Manual Transmissions
			EV0 = All 4.7L	

Skid Plate,Front Axle
Figure 2-810

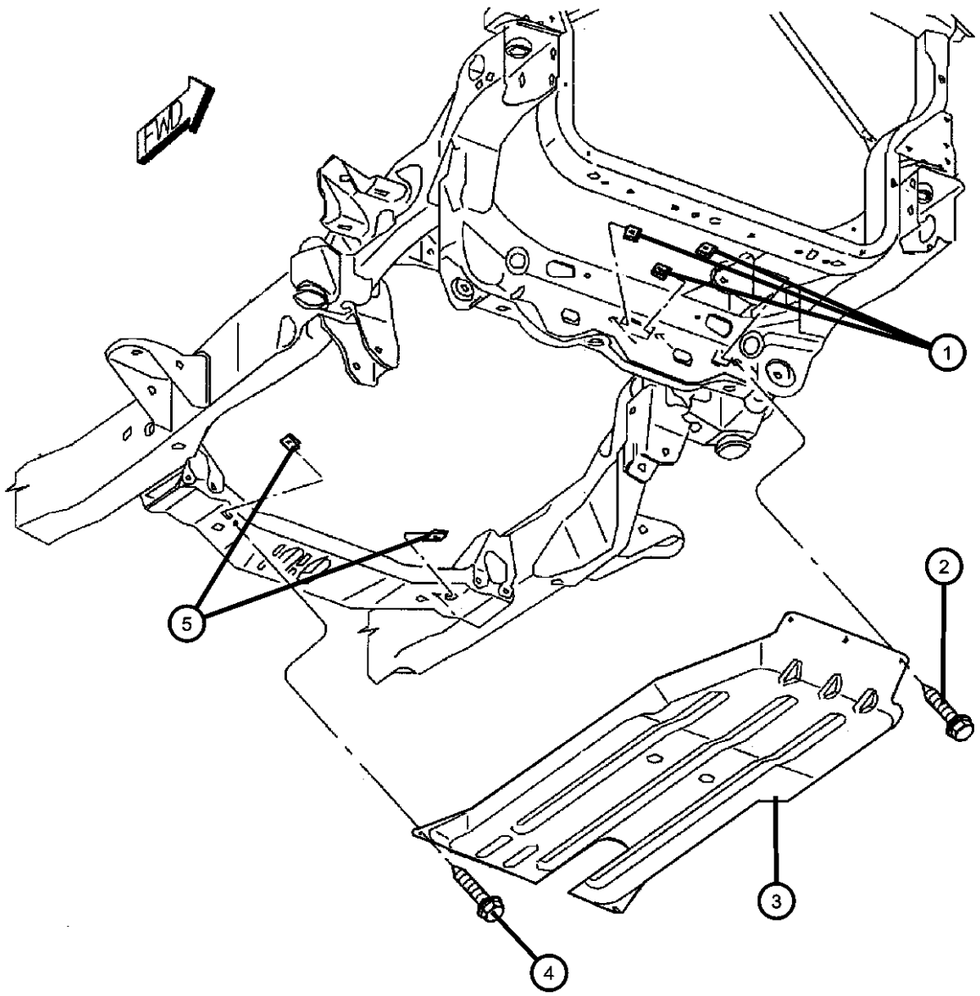

ITEM	PART NUMBER	QTY	LINE	SERIES	BODY	ENGINE	TRANS	TRIM	DESCRIPTION
1	06101340	2	5						U-NUT, M10-1.50, Skid Plate to Frame, Mounting
2	06506164AA	2	5						SCREW AND WASHER, Hex Head, Skid Plate to Frame, Mounting
3	52020378AC	1	5						SKID PLATE, Front
4	06506164AA	2	5						SCREW AND WASHER, Hex Head, Skid Plate to Crossmember, Mounting
5	06101340	2	5						U-NUT, M10-1.50, Skid Plate to Crossmember, Mounting

DAKOTA (AN)

SERIES	LINE	BODY	ENGINE	TRANSMISSION
L = Dakota (All)	1 = Dakota 2WD	61 = Regular Cab (112 WB)	EPE = 2.5L 4 Cylinder	DGK = 4 Speed Automatic 42RE
	5 = Dakota 4WD	31 = Club Cab (131 WB)	EHC = 3.9L 6 Cylinder	DGT = 4 Speed Automatic 46RE
		84 = Quad Cab (131 WB)	EML = 5.0L 8 Cylinder	DDC = 5 Speed HD Manual
			EVA = 4.7L Magnum V8	DDK = 5 Speed HD Manual
			EP0 = All 2.5L	DG4 = Multispeed Automatic 45RFE
			EH0 = All 3.9L	DG0 = All Automatic Transmissions
			EM0 = All 5.9L	DBB = All Manual Transmissions
			EV0 = All 4.7L	

Group - 3

Rear Axle

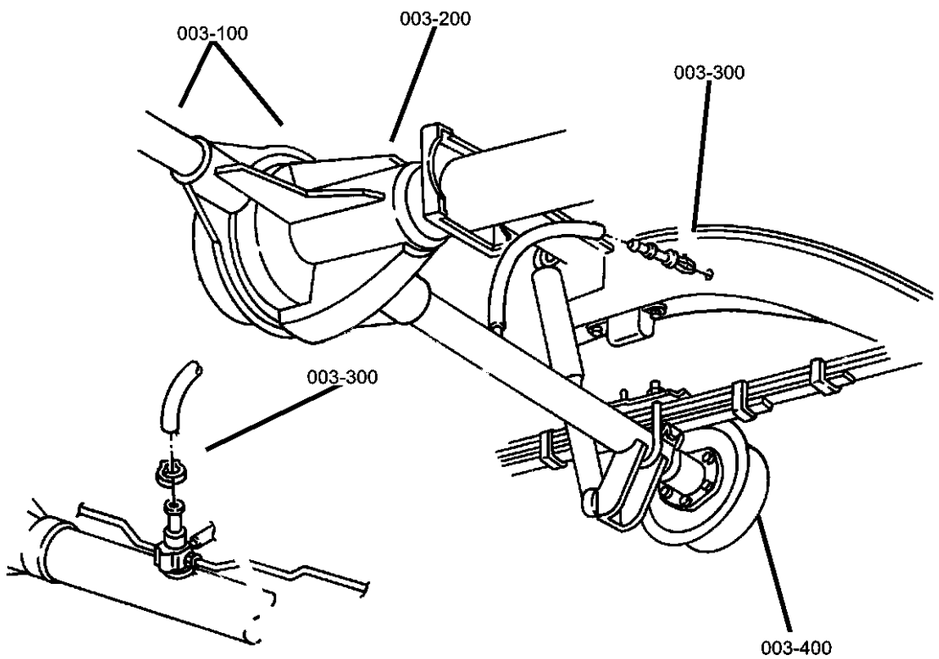

003-100 Rear Axle	003-200 Differential and Housing	003-300 Rear Axle Vent	
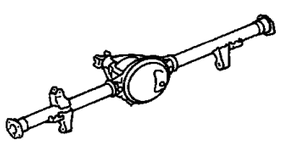	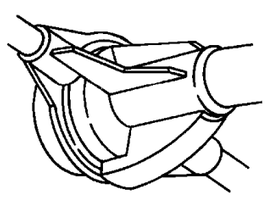	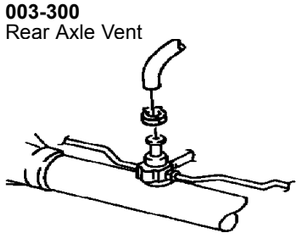	

Group - 3 Rear Axle

Illustration Title — Group-Fig. No.

Rear Axle
Axle Assembly,Rear,Corporate 8.25 [DRA] ..... Fig. 3 - 110
Axle Assembly,Rear,Corporate 9.25LD [DRB] ..... Fig. 3 - 120

Differential and Housing
Axle,Rear,with Differential and Housing,Corporate 8.25 [DRA] ..... Fig. 3 - 210
Axle,Rear,with Differential and Housing,Corporate 9.25LD [DRB] ..... Fig. 3 - 220

Rear Axle Vent
Vent,Axle ..... Fig. 3 - 310

Axle Assembly,Rear,Corporate 8.25 [DRA]
Figure 3-110

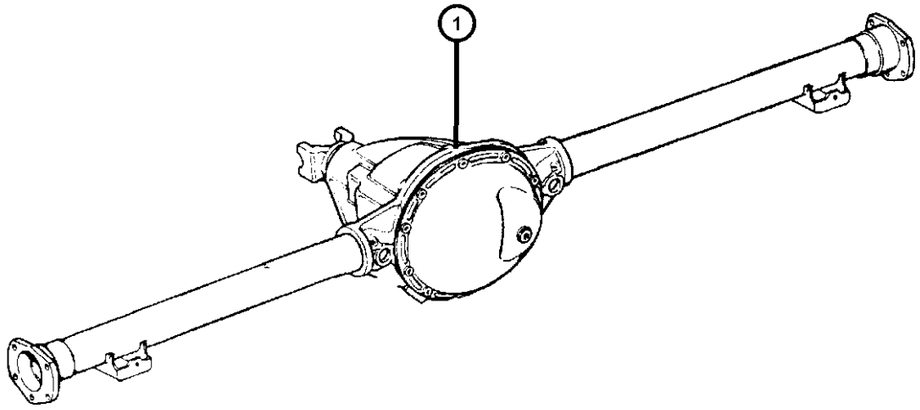

ITEM	PART NUMBER	QTY	LINE	SERIES	BODY	ENGINE	TRANS	TRIM	DESCRIPTION
Note:Sales Codes;									
[DMC]=Axle Ratio - 3.21									
[DMD]=Axle Ratio - 3.55									
[DMH]=Axle Ratio - 3.92									
[DRA]=Axle - Rear,Corporate 8.25									
[DSA] =Axle - Anti-Spin Differential									
1									AXLE, Service Rear
	05015765AA	1	1						[DMD,DSA] with Tag 52070300AA
	04874469								Mopar SAE 75W-140 Synthetic Gear and Axle Lube Quart
	68003055AA								Mopar SAE 75W-140 Synthetic Gear and Axle Lube 16 Gallon Keg
	05010320AA								Mopar SAE 75W-90 Synthetic Gear Lube Quart
	68003056								Mopar SAE 75W-90 Synthetic Gear Lube 16 Gallon Keg
	P5007326								Performance Mobil 1, 75W - 90 Synthetic Gear Lube
		1	1						[DMD,DSA] with Tag 52070341AB
	04874469								Mopar SAE 75W-140 Synthetic Gear and Axle Lube Quart
	68003055AA								Mopar SAE 75W-140 Synthetic Gear and Axle Lube 16 Gallon Keg
	05010320AA								Mopar SAE 75W-90 Synthetic Gear Lube Quart
	68003056								Mopar SAE 75W-90 Synthetic Gear Lube 16 Gallon Keg
	P5007326								Performance Mobil 1, 75W - 90 Synthetic Gear Lube
	05015768AA	1	1						[DMH,DSA] with Tag 52070302AA
	04874469								Mopar SAE 75W-140 Synthetic Gear and Axle Lube Quart
	68003055AA								Mopar SAE 75W-140 Synthetic Gear and Axle Lube 16 Gallon Keg
	05010320AA								Mopar SAE 75W-90 Synthetic Gear Lube Quart
	68003056								Mopar SAE 75W-90 Synthetic Gear Lube 16 Gallon Keg

DAKOTA (AN)

SERIES	LINE	BODY	ENGINE	TRANSMISSION
L = Dakota (All)	1 = Dakota 2WD	61 = Regular Cab (112 WB)	EPE = 2.5L 4 Cylinder	DGK = 4 Speed Automatic 42RE
	5 = Dakota 4WD	31 = Club Cab (131 WB)	EHC = 3.9L 6 Cylinder	DGT = 4 Speed Automatic 46RE
		84 = Quad Cab (131 WB)	EML = 5.0L 8 Cylinder	DDC = 5 Speed HD Manual
			EVA = 4.7L Magnum V8	DDK = 5 Speed HD Manual
			EP0 = All 2.5L	DG4 = Multispeed Automatic 45RFE
			EH0 = All 3.9L	DG0 = All Automatic Transmissions
			EM0 = All 5.9L	DBB = All Manual Transmissions
			EV0 = All 4.7L	

Axle Assembly,Rear,Corporate 8.25 [DRA]
Figure 3-110

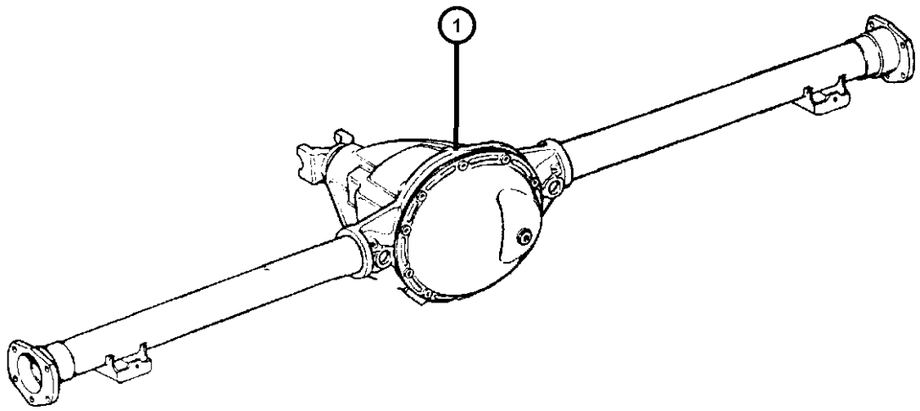

ITEM	PART NUMBER	QTY	LINE	SERIES	BODY	ENGINE	TRANS	TRIM	DESCRIPTION
	P5007326								Performance Mobil 1, 75W - 90 Synthetic Gear Lube
		1	1						[DMH,DSA] with Tag 52070292AB
	04874469								Mopar SAE 75W-140 Synthetic Gear and Axle Lube Quart
	68003055AA								Mopar SAE 75W-140 Synthetic Gear and Axle Lube 16 Gallon Keg
	05010320AA								Mopar SAE 75W-90 Synthetic Gear Lube Quart
	68003056								Mopar SAE 75W-90 Synthetic Gear Lube 16 Gallon Keg
	P5007326								Performance Mobil 1, 75W - 90 Synthetic Gear Lube
	05015774AA	1	1						[DMH] with Tag 52070301AA
	04874469								Mopar SAE 75W-140 Synthetic Gear and Axle Lube Quart
	68003055AA								Mopar SAE 75W-140 Synthetic Gear and Axle Lube 16 Gallon Keg
	05010320AA								Mopar SAE 75W-90 Synthetic Gear Lube Quart
	68003056								Mopar SAE 75W-90 Synthetic Gear Lube 16 Gallon Keg
	P5007326								Performance Mobil 1, 75W - 90 Synthetic Gear Lube
		1	1						[DMH] with Tag 52069779AD
	04874469								Mopar SAE 75W-140 Synthetic Gear and Axle Lube Quart
	68003055AA								Mopar SAE 75W-140 Synthetic Gear and Axle Lube 16 Gallon Keg
	05010320AA								Mopar SAE 75W-90 Synthetic Gear Lube Quart
	68003056								Mopar SAE 75W-90 Synthetic Gear Lube 16 Gallon Keg
	P5007326								Performance Mobil 1, 75W - 90 Synthetic Gear Lube
	05015783AA	1	1						[DMC] with Tag 52069642AF
	04874469								Mopar SAE 75W-140 Synthetic Gear and Axle Lube Quart

DAKOTA (AN)

SERIES	LINE	BODY	ENGINE	TRANSMISSION
L = Dakota (All)	1 = Dakota 2WD	61 = Regular Cab (112 WB)	EPE = 2.5L 4 Cylinder	DGK = 4 Speed Automatic 42RE
	5 = Dakota 4WD	31 = Club Cab (131 WB)	EHC = 3.9L 6 Cylinder	DGT = 4 Speed Automatic 46RE
		84 = Quad Cab (131 WB)	EML = 5.0L 8 Cylinder	DDC = 5 Speed HD Manual
			EVA = 4.7L Magnum V8	DDK = 5 Speed HD Manual
			EP0 = All 2.5L	DG4 = Multispeed Automatic 45RFE
			EH0 = All 3.9L	DG0 = All Automatic Transmissions
			EM0 = All 5.9L	DBB = All Manual Transmissions
			EV0 = All 4.7L	

Axle Assembly,Rear,Corporate 8.25 [DRA]
Figure 3-110

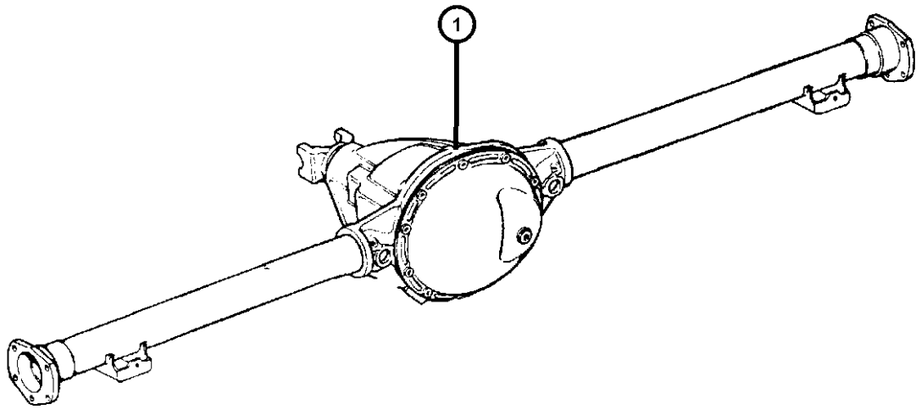

ITEM	PART NUMBER	QTY	LINE	SERIES	BODY	ENGINE	TRANS	TRIM	DESCRIPTION
	68003055AA								Mopar SAE 75W-140 Synthetic Gear and Axle Lube 16 Gallon Keg
	05010320AA								Mopar SAE 75W-90 Synthetic Gear Lube Quart
	68003056								Mopar SAE 75W-90 Synthetic Gear Lube 16 Gallon Keg
	P5007326								Performance Mobil 1, 75W - 90 Synthetic Gear Lube
	05015786AA	1	1						[DMD] with Tag 52070298AA
	04874469								Mopar SAE 75W-140 Synthetic Gear and Axle Lube Quart
	68003055AA								Mopar SAE 75W-140 Synthetic Gear and Axle Lube 16 Gallon Keg
	05010320AA								Mopar SAE 75W-90 Synthetic Gear Lube Quart
	68003056								Mopar SAE 75W-90 Synthetic Gear Lube 16 Gallon Keg
	P5007326								Performance Mobil 1, 75W - 90 Synthetic Gear Lube
		1	1						[DMD] with Tag 52069814AD
	04874469								Mopar SAE 75W-140 Synthetic Gear and Axle Lube Quart
	68003055AA								Mopar SAE 75W-140 Synthetic Gear and Axle Lube 16 Gallon Keg
	05010320AA								Mopar SAE 75W-90 Synthetic Gear Lube Quart
	68003056								Mopar SAE 75W-90 Synthetic Gear Lube 16 Gallon Keg
	P5007326								Performance Mobil 1, 75W - 90 Synthetic Gear Lube
	05015798AA	1	5						[DMH] with Tag 52070305AA
	04874469								Mopar SAE 75W-140 Synthetic Gear and Axle Lube Quart
	68003055AA								Mopar SAE 75W-140 Synthetic Gear and Axle Lube 16 Gallon Keg
	05010320AA								Mopar SAE 75W-90 Synthetic Gear Lube Quart
	68003056								Mopar SAE 75W-90 Synthetic Gear Lube 16 Gallon Keg

DAKOTA (AN)

SERIES	LINE	BODY	ENGINE	TRANSMISSION
L = Dakota (All)	1 = Dakota 2WD	61 = Regular Cab (112 WB)	EPE = 2.5L 4 Cylinder	DGK = 4 Speed Automatic 42RE
	5 = Dakota 4WD	31 = Club Cab (131 WB)	EHC = 3.9L 6 Cylinder	DGT = 4 Speed Automatic 46RE
		84 = Quad Cab (131 WB)	EML = 5.0L 8 Cylinder	DDC = 5 Speed HD Manual
			EVA = 4.7L Magnum V8	DDK = 5 Speed HD Manual
			EP0 = All 2.5L	DG4 = Multispeed Automatic 45RFE
			EH0 = All 3.9L	DG0 = All Automatic Transmissions
			EM0 = All 5.9L	DBB = All Manual Transmissions
			EV0 = All 4.7L	

Axle Assembly,Rear,Corporate 8.25 [DRA]
Figure 3-110

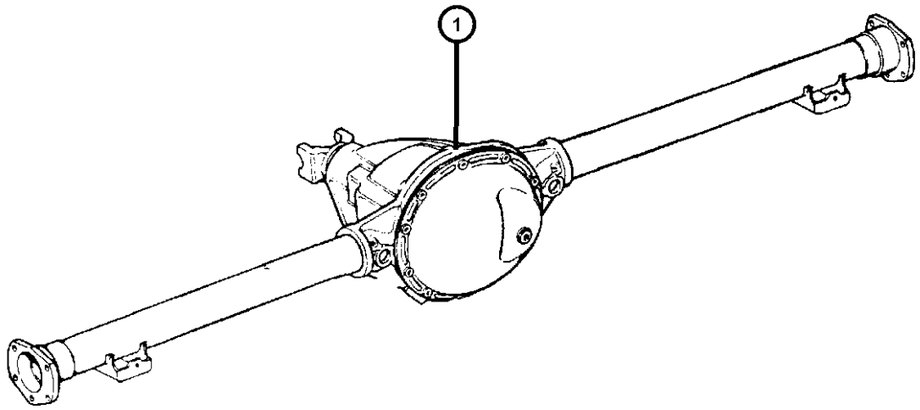

ITEM	PART NUMBER	QTY	LINE	SERIES	BODY	ENGINE	TRANS	TRIM	DESCRIPTION
	P5007326								Performance Mobil 1, 75W - 90 Synthetic Gear Lube
		1	5						[DMH] with Tag 52070366AA
	04874469								Mopar SAE 75W-140 Synthetic Gear and Axle Lube Quart
	68003055AA								Mopar SAE 75W-140 Synthetic Gear and Axle Lube 16 Gallon Keg
	05010320AA								Mopar SAE 75W-90 Synthetic Gear Lube Quart
	68003056								Mopar SAE 75W-90 Synthetic Gear Lube 16 Gallon Keg
	P5007326								Performance Mobil 1, 75W - 90 Synthetic Gear Lube
	05015802AA	1	5						[DMD,DSA] with Tag 52070304AA
	04874469								Mopar SAE 75W-140 Synthetic Gear and Axle Lube Quart
	68003055AA								Mopar SAE 75W-140 Synthetic Gear and Axle Lube 16 Gallon Keg
	05010320AA								Mopar SAE 75W-90 Synthetic Gear Lube Quart
	68003056								Mopar SAE 75W-90 Synthetic Gear Lube 16 Gallon Keg
	P5007326								Performance Mobil 1, 75W - 90 Synthetic Gear Lube
		1	5						[DMD,DSA] with Tag 52070293AB
	04874469								Mopar SAE 75W-140 Synthetic Gear and Axle Lube Quart
	68003055AA								Mopar SAE 75W-140 Synthetic Gear and Axle Lube 16 Gallon Keg
	05010320AA								Mopar SAE 75W-90 Synthetic Gear Lube Quart
	68003056								Mopar SAE 75W-90 Synthetic Gear Lube 16 Gallon Keg
	P5007326								Performance Mobil 1, 75W - 90 Synthetic Gear Lube
	05015806AA	1	5						[DMD] with Tag 52070303AA
	04874469								Mopar SAE 75W-140 Synthetic Gear and Axle Lube Quart

DAKOTA (AN)

SERIES	LINE	BODY	ENGINE	TRANSMISSION
L = Dakota (All)	1 = Dakota 2WD	61 = Regular Cab (112 WB)	EPE = 2.5L 4 Cylinder	DGK = 4 Speed Automatic 42RE
	5 = Dakota 4WD	31 = Club Cab (131 WB)	EHC = 3.9L 6 Cylinder	DGT = 4 Speed Automatic 46RE
		84 = Quad Cab (131 WB)	EML = 5.0L 8 Cylinder	DDC = 5 Speed HD Manual
			EVA = 4.7L Magnum V8	DDK = 5 Speed HD Manual
			EP0 = All 2.5L	DG4 = Multispeed Automatic 45RFE
			EH0 = All 3.9L	DG0 = All Automatic Transmissions
			EM0 = All 5.9L	DBB = All Manual Transmissions
			EV0 = All 4.7L	

Axle Assembly,Rear,Corporate 8.25 [DRA]
Figure 3-110

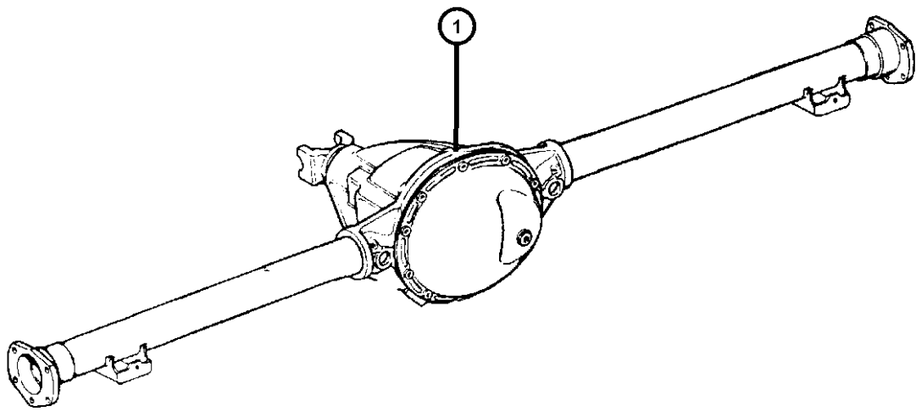

ITEM	PART NUMBER	QTY	LINE	SERIES	BODY	ENGINE	TRANS	TRIM	DESCRIPTION
	68003055AA								Mopar SAE 75W-140 Synthetic Gear and Axle Lube 16 Gallon Keg
	05010320AA								Mopar SAE 75W-90 Synthetic Gear Lube Quart
	68003056								Mopar SAE 75W-90 Synthetic Gear Lube 16 Gallon Keg
	P5007326								Performance Mobil 1, 75W - 90 Synthetic Gear Lube
		1	5						[DMD] with Tag 52069812AD
	04874469								Mopar SAE 75W-140 Synthetic Gear and Axle Lube Quart
	68003055AA								Mopar SAE 75W-140 Synthetic Gear and Axle Lube 16 Gallon Keg
	05010320AA								Mopar SAE 75W-90 Synthetic Gear Lube Quart
	68003056								Mopar SAE 75W-90 Synthetic Gear Lube 16 Gallon Keg
	P5007326								Performance Mobil 1, 75W - 90 Synthetic Gear Lube
	05015807AA	1	5						[DMH,DSA] with Tag 52070306AA
	04874469								Mopar SAE 75W-140 Synthetic Gear and Axle Lube Quart
	68003055AA								Mopar SAE 75W-140 Synthetic Gear and Axle Lube 16 Gallon Keg
	05010320AA								Mopar SAE 75W-90 Synthetic Gear Lube Quart
	68003056								Mopar SAE 75W-90 Synthetic Gear Lube 16 Gallon Keg
	P5007326								Performance Mobil 1, 75W - 90 Synthetic Gear Lube
		1	5						[DMH,DSA] with Tag 52070294AB
	04874469								Mopar SAE 75W-140 Synthetic Gear and Axle Lube Quart
	68003055AA								Mopar SAE 75W-140 Synthetic Gear and Axle Lube 16 Gallon Keg
	05010320AA								Mopar SAE 75W-90 Synthetic Gear Lube Quart

DAKOTA (AN)

SERIES	LINE	BODY	ENGINE	TRANSMISSION
L = Dakota (All)	1 = Dakota 2WD 5 = Dakota 4WD	61 = Regular Cab (112 WB) 31 = Club Cab (131 WB) 84 = Quad Cab (131 WB)	EPE = 2.5L 4 Cylinder EHC = 3.9L 6 Cylinder EML = 5.0L 8 Cylinder EVA = 4.7L Magnum V8 EP0 = All 2.5L EH0 = All 3.9L EM0 = All 5.9L EV0 = All 4.7L	DGK = 4 Speed Automatic 42RE DGT = 4 Speed Automatic 46RE DDC = 5 Speed HD Manual DDK = 5 Speed HD Manual DG4 = Multispeed Automatic 45RFE DG0 = All Automatic Transmissions DBB = All Manual Transmissions

Axle Assembly,Rear,Corporate 8.25 [DRA]
Figure 3-110

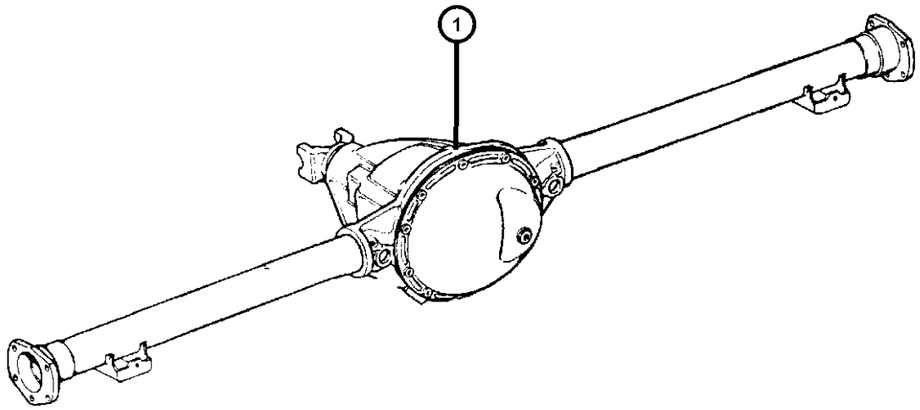

ITEM	PART NUMBER	QTY	LINE	SERIES	BODY	ENGINE	TRANS	TRIM	DESCRIPTION
	68003056								Mopar SAE 75W-90 Synthetic Gear Lube 16 Gallon Keg
	P5007326								Performance Mobil 1, 75W - 90 Synthetic Gear Lube

DAKOTA (AN)

SERIES	LINE	BODY	ENGINE	TRANSMISSION
L = Dakota (All)	1 = Dakota 2WD	61 = Regular Cab (112 WB)	EPE = 2.5L 4 Cylinder	DGK = 4 Speed Automatic 42RE
	5 = Dakota 4WD	31 = Club Cab (131 WB)	EHC = 3.9L 6 Cylinder	DGT = 4 Speed Automatic 46RE
		84 = Quad Cab (131 WB)	EML = 5.0L 8 Cylinder	DDC = 5 Speed HD Manual
			EVA = 4.7L Magnum V8	DDK = 5 Speed HD Manual
			EP0 = All 2.5L	DG4 = Multispeed Automatic 45RFE
			EH0 = All 3.9L	DG0 = All Automatic Transmissions
			EM0 = All 5.9L	DBB = All Manual Transmissions
			EV0 = All 4.7L	

Axle Assembly,Rear,Corporate 9.25LD [DRB]
Figure 3-120

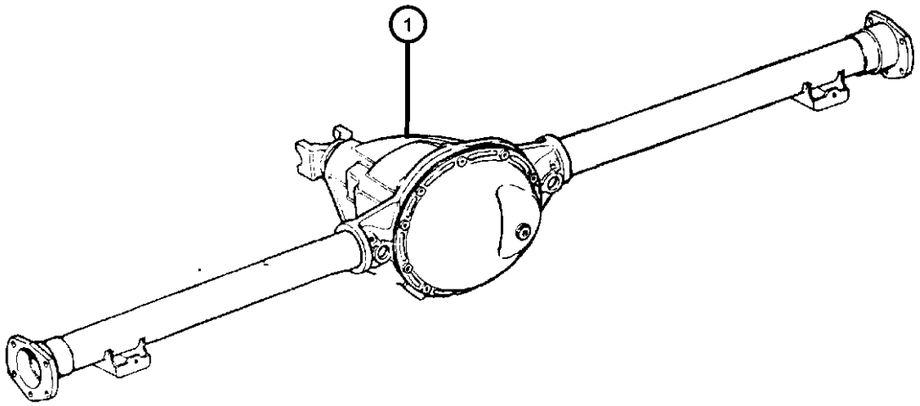

ITEM	PART NUMBER	QTY	LINE	SERIES	BODY	ENGINE	TRANS	TRIM	DESCRIPTION
Note:Sales Codes; [DMD]=Axle Ratio - 3.55 [DMH]=Axle Ratio - 3.92 [DRB]=Axle - Rear,Corporate 9.25LD [DSA] =Axle - Anti-Spin Differential									
1									AXLE, Service Rear
	05015809AA	1	1						[DMD,DSA] with Tag 52070308AA
	04874469								Mopar SAE 75W-140 Synthetic Gear and Axle Lube Quart
	68003055AA								Mopar SAE 75W-140 Synthetic Gear and Axle Lube 16 Gallon Keg
	05010320AA								Mopar SAE 75W-90 Synthetic Gear Lube Quart
	68003056								Mopar SAE 75W-90 Synthetic Gear Lube 16 Gallon Keg
	P5007326								Performance Mobil 1, 75W - 90 Synthetic Gear Lube
		1	1						[DMD,DSA] with Tag 52070295AB
	04874469								Mopar SAE 75W-140 Synthetic Gear and Axle Lube Quart
	68003055AA								Mopar SAE 75W-140 Synthetic Gear and Axle Lube 16 Gallon Keg
	05010320AA								Mopar SAE 75W-90 Synthetic Gear Lube Quart
	68003056								Mopar SAE 75W-90 Synthetic Gear Lube 16 Gallon Keg
	P5007326								Performance Mobil 1, 75W - 90 Synthetic Gear Lube
	05015815AA	1	1						[DMH,DSA] with Tag 52070310AA
	04874469								Mopar SAE 75W-140 Synthetic Gear and Axle Lube Quart
	68003055AA								Mopar SAE 75W-140 Synthetic Gear and Axle Lube 16 Gallon Keg
	05010320AA								Mopar SAE 75W-90 Synthetic Gear Lube Quart
	68003056								Mopar SAE 75W-90 Synthetic Gear Lube 16 Gallon Keg
	P5007326								Performance Mobil 1, 75W - 90 Synthetic Gear Lube

DAKOTA (AN)

SERIES	LINE	BODY	ENGINE	TRANSMISSION
L = Dakota (All)	1 = Dakota 2WD	61 = Regular Cab (112 WB)	EPE = 2.5L 4 Cylinder	DGK = 4 Speed Automatic 42RE
	5 = Dakota 4WD	31 = Club Cab (131 WB)	EHC = 3.9L 6 Cylinder	DGT = 4 Speed Automatic 46RE
		84 = Quad Cab (131 WB)	EML = 5.0L 8 Cylinder	DDC = 5 Speed HD Manual
			EVA = 4.7L Magnum V8	DDK = 5 Speed HD Manual
			EP0 = All 2.5L	DG4 = Multispeed Automatic 45RFE
			EH0 = All 3.9L	DG0 = All Automatic Transmissions
			EM0 = All 5.9L	DBB = All Manual Transmissions
			EV0 = All 4.7L	

Axle Assembly,Rear,Corporate 9.25LD [DRB]
Figure 3-120

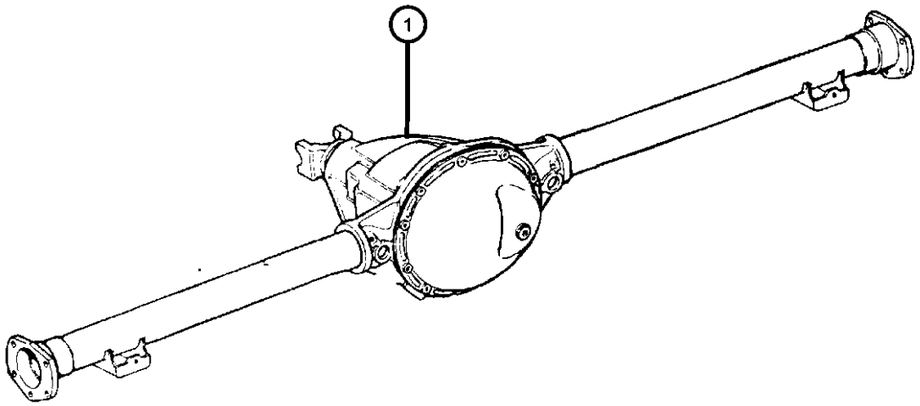

ITEM	PART NUMBER	QTY	LINE	SERIES	BODY	ENGINE	TRANS	TRIM	DESCRIPTION
		1	1						[DMH,DSA] with Tag 52070200AB
	04874469								Mopar SAE 75W-140 Synthetic Gear and Axle Lube Quart
	68003055AA								Mopar SAE 75W-140 Synthetic Gear and Axle Lube 16 Gallon Keg
	05010320AA								Mopar SAE 75W-90 Synthetic Gear Lube Quart
	68003056								Mopar SAE 75W-90 Synthetic Gear Lube 16 Gallon Keg
	P5007326								Performance Mobil 1, 75W - 90 Synthetic Gear Lube
	05015816AA	1	1						[DMH] with Tag 52070378AA
	04874469								Mopar SAE 75W-140 Synthetic Gear and Axle Lube Quart
	68003055AA								Mopar SAE 75W-140 Synthetic Gear and Axle Lube 16 Gallon Keg
	05010320AA								Mopar SAE 75W-90 Synthetic Gear Lube Quart
	68003056								Mopar SAE 75W-90 Synthetic Gear Lube 16 Gallon Keg
	P5007326								Performance Mobil 1, 75W - 90 Synthetic Gear Lube
		1	1						[DMH] with Tag 52069982AA
	04874469								Mopar SAE 75W-140 Synthetic Gear and Axle Lube Quart
	68003055AA								Mopar SAE 75W-140 Synthetic Gear and Axle Lube 16 Gallon Keg
	05010320AA								Mopar SAE 75W-90 Synthetic Gear Lube Quart
	68003056								Mopar SAE 75W-90 Synthetic Gear Lube 16 Gallon Keg
	P5007326								Performance Mobil 1, 75W - 90 Synthetic Gear Lube
	05015820AA	1	1						[DMD] with Tag 52070377AA
	04874469								Mopar SAE 75W-140 Synthetic Gear and Axle Lube Quart
	68003055AA								Mopar SAE 75W-140 Synthetic Gear and Axle Lube 16 Gallon Keg

DAKOTA (AN)

SERIES	LINE	BODY	ENGINE	TRANSMISSION
L = Dakota (All)	1 = Dakota 2WD	61 = Regular Cab (112 WB)	EPE = 2.5L 4 Cylinder	DGK = 4 Speed Automatic 42RE
	5 = Dakota 4WD	31 = Club Cab (131 WB)	EHC = 3.9L 6 Cylinder	DGT = 4 Speed Automatic 46RE
		84 = Quad Cab (131 WB)	EML = 5.0L 8 Cylinder	DDC = 5 Speed HD Manual
			EVA = 4.7L Magnum V8	DDK = 5 Speed HD Manual
			EP0 = All 2.5L	DG4 = Multispeed Automatic 45RFE
			EH0 = All 3.9L	DG0 = All Automatic Transmissions
			EM0 = All 5.9L	DBB = All Manual Transmissions
			EV0 = All 4.7L	

Axle Assembly,Rear,Corporate 9.25LD [DRB]
Figure 3-120

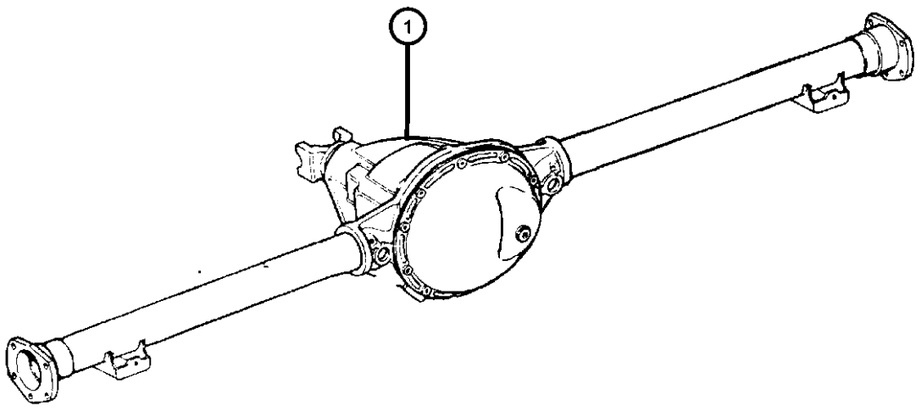

ITEM	PART NUMBER	QTY	LINE	SERIES	BODY	ENGINE	TRANS	TRIM	DESCRIPTION
	05010320AA								Mopar SAE 75W-90 Synthetic Gear Lube Quart
	68003056								Mopar SAE 75W-90 Synthetic Gear Lube 16 Gallon Keg
	P5007326								Performance Mobil 1, 75W - 90 Synthetic Gear Lube
		1	1						[DMD] with Tag 52069973AA
	04874469								Mopar SAE 75W-140 Synthetic Gear and Axle Lube Quart
	68003055AA								Mopar SAE 75W-140 Synthetic Gear and Axle Lube 16 Gallon Keg
	05010320AA								Mopar SAE 75W-90 Synthetic Gear Lube Quart
	68003056								Mopar SAE 75W-90 Synthetic Gear Lube 16 Gallon Keg
	P5007326								Performance Mobil 1, 75W - 90 Synthetic Gear Lube
	05015821AA	1	5						[DMD,DSA] with Tag 52070312AA
	04874469								Mopar SAE 75W-140 Synthetic Gear and Axle Lube Quart
	68003055AA								Mopar SAE 75W-140 Synthetic Gear and Axle Lube 16 Gallon Keg
	05010320AA								Mopar SAE 75W-90 Synthetic Gear Lube Quart
	68003056								Mopar SAE 75W-90 Synthetic Gear Lube 16 Gallon Keg
	P5007326								Performance Mobil 1, 75W - 90 Synthetic Gear Lube
		1	5						[DMD,DSA] with Tag 52070296AB
	04874469								Mopar SAE 75W-140 Synthetic Gear and Axle Lube Quart
	68003055AA								Mopar SAE 75W-140 Synthetic Gear and Axle Lube 16 Gallon Keg
	05010320AA								Mopar SAE 75W-90 Synthetic Gear Lube Quart
	68003056								Mopar SAE 75W-90 Synthetic Gear Lube 16 Gallon Keg
	P5007326								Performance Mobil 1, 75W - 90 Synthetic Gear Lube

DAKOTA (AN)

SERIES	LINE	BODY	ENGINE	TRANSMISSION
L = Dakota (All)	1 = Dakota 2WD	61 = Regular Cab (112 WB)	EPE = 2.5L 4 Cylinder	DGK = 4 Speed Automatic 42RE
	5 = Dakota 4WD	31 = Club Cab (131 WB)	EHC = 3.9L 6 Cylinder	DGT = 4 Speed Automatic 46RE
		84 = Quad Cab (131 WB)	EML = 5.0L 8 Cylinder	DDC = 5 Speed HD Manual
			EVA = 4.7L Magnum V8	DDK = 5 Speed HD Manual
			EP0 = All 2.5L	DG4 = Multispeed Automatic 45RFE
			EH0 = All 3.9L	DG0 = All Automatic Transmissions
			EM0 = All 5.9L	DBB = All Manual Transmissions
			EV0 = All 4.7L	

Axle Assembly,Rear,Corporate 9.25LD [DRB]
Figure 3-120

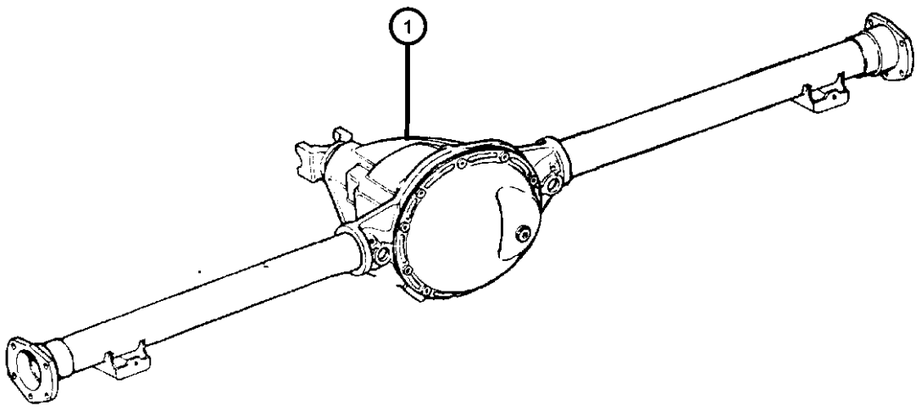

ITEM	PART NUMBER	QTY	LINE	SERIES	BODY	ENGINE	TRANS	TRIM	DESCRIPTION
	05015830AA	1	5						[DMH,DSA] with Tag 52070314AA
	04874469								Mopar SAE 75W-140 Synthetic Gear and Axle Lube Quart
	68003055AA								Mopar SAE 75W-140 Synthetic Gear and Axle Lube 16 Gallon Keg
	05010320AA								Mopar SAE 75W-90 Synthetic Gear Lube Quart
	68003056								Mopar SAE 75W-90 Synthetic Gear Lube 16 Gallon Keg
	P5007326								Performance Mobil 1, 75W - 90 Synthetic Gear Lube
		1	5						[DMH,DSA] with Tag 52070297AB
	04874469								Mopar SAE 75W-140 Synthetic Gear and Axle Lube Quart
	68003055AA								Mopar SAE 75W-140 Synthetic Gear and Axle Lube 16 Gallon Keg
	05010320AA								Mopar SAE 75W-90 Synthetic Gear Lube Quart
	68003056								Mopar SAE 75W-90 Synthetic Gear Lube 16 Gallon Keg
	P5007326								Performance Mobil 1, 75W - 90 Synthetic Gear Lube
	05015839AA	1	5						[DMH] with Tag 52070376AA
	04874469								Mopar SAE 75W-140 Synthetic Gear and Axle Lube Quart
	68003055AA								Mopar SAE 75W-140 Synthetic Gear and Axle Lube 16 Gallon Keg
	05010320AA								Mopar SAE 75W-90 Synthetic Gear Lube Quart
	68003056								Mopar SAE 75W-90 Synthetic Gear Lube 16 Gallon Keg
	05015840AA	1	5						[DMD] with Tag 52070379AA
	04874469								Mopar SAE 75W-140 Synthetic Gear and Axle Lube Quart
	68003055AA								Mopar SAE 75W-140 Synthetic Gear and Axle Lube 16 Gallon Keg
	05010320AA								Mopar SAE 75W-90 Synthetic Gear Lube Quart

DAKOTA (AN)

SERIES	LINE	BODY	ENGINE	TRANSMISSION
L = Dakota (All)	1 = Dakota 2WD 5 = Dakota 4WD	61 = Regular Cab (112 WB) 31 = Club Cab (131 WB) 84 = Quad Cab (131 WB)	EPE = 2.5L 4 Cylinder EHC = 3.9L 6 Cylinder EML = 5.0L 8 Cylinder EVA = 4.7L Magnum V8 EP0 = All 2.5L EH0 = All 3.9L EM0 = All 5.9L EV0 = All 4.7L	DGK = 4 Speed Automatic 42RE DGT = 4 Speed Automatic 46RE DDC = 5 Speed HD Manual DDK = 5 Speed HD Manual DG4 = Multispeed Automatic 45RFE DG0 = All Automatic Transmissions DBB = All Manual Transmissions

Axle Assembly,Rear,Corporate 9.25LD [DRB]
Figure 3-120

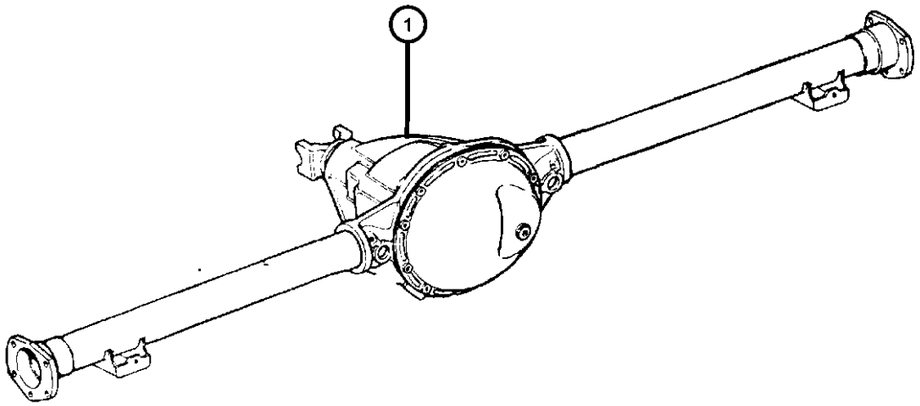

ITEM	PART NUMBER	QTY	LINE	SERIES	BODY	ENGINE	TRANS	TRIM	DESCRIPTION
	68003056								Mopar SAE 75W-90 Synthetic Gear Lube 16 Gallon Keg
	P5007326								Performance Mobil 1, 75W - 90 Synthetic Gear Lube
		1	5						[DMD] with Tag 52069975AA
	04874469								Mopar SAE 75W-140 Synthetic Gear and Axle Lube Quart
	68003055AA								Mopar SAE 75W-140 Synthetic Gear and Axle Lube 16 Gallon Keg
	05010320AA								Mopar SAE 75W-90 Synthetic Gear Lube Quart
	68003056								Mopar SAE 75W-90 Synthetic Gear Lube 16 Gallon Keg
	P5007326								Performance Mobil 1, 75W - 90 Synthetic Gear Lube

DAKOTA (AN)

SERIES	LINE	BODY	ENGINE	TRANSMISSION
L = Dakota (All)	1 = Dakota 2WD	61 = Regular Cab (112 WB)	EPE = 2.5L 4 Cylinder	DGK = 4 Speed Automatic 42RE
	5 = Dakota 4WD	31 = Club Cab (131 WB)	EHC = 3.9L 6 Cylinder	DGT = 4 Speed Automatic 46RE
		84 = Quad Cab (131 WB)	EML = 5.0L 8 Cylinder	DDC = 5 Speed HD Manual
			EVA = 4.7L Magnum V8	DDK = 5 Speed HD Manual
			EP0 = All 2.5L	DG4 = Multispeed Automatic 45RFE
			EH0 = All 3.9L	DG0 = All Automatic Transmissions
			EM0 = All 5.9L	DBB = All Manual Transmissions
			EV0 = All 4.7L	

Axle,Rear,with Differential and Housing,Corporate 8.25 [DRA]
Figure 3-210

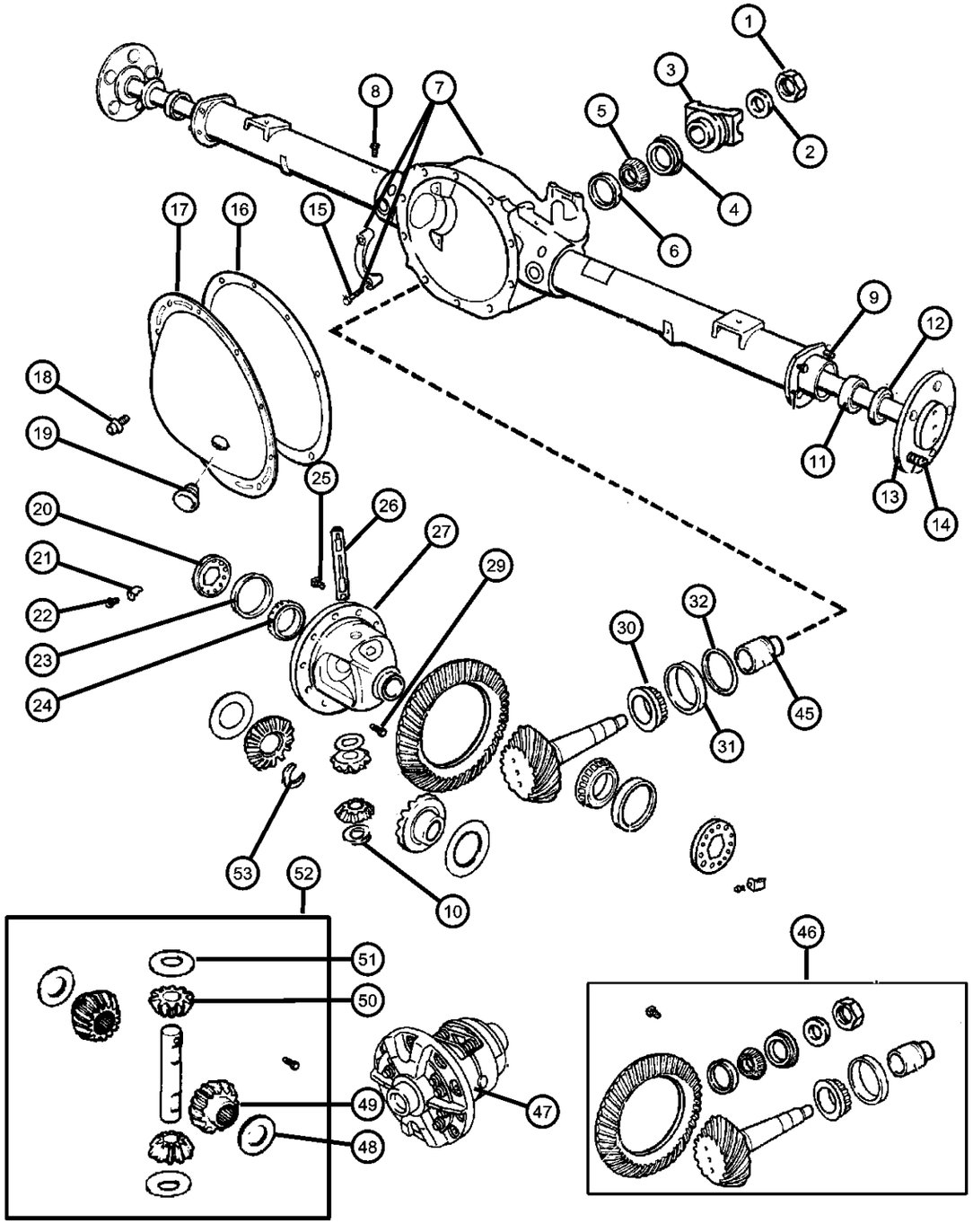

ITEM	PART NUMBER	QTY	LINE	SERIES	BODY	ENGINE	TRANS	TRIM	DESCRIPTION
Note:Sales Codes;									
[DMC]=Axle Ratio - 3.21									
[DMD]=Axle Ratio - 3.55									
[DMH]=Axle Ratio - 3.92									
[DRA]=Axle - Rear,Corporate 8.25									
[DSA] =Axle - Anti-Spin Differential									
1									NUT, Pinion Yoke
	06028041	1	1						
		1	5						
2									WASHER, Pinion Yoke
	02070117	1	1						
		1	5						
3									FLANGE, Driveshaft Yoke
	52105065	1	1						
		1	5						
4									SEAL, Drive Pinion
	52070339AA	1	1						
		1	5						
5									BEARING, Drive Pinion
	02070316	1	1						Front
		1	5						Front
6									CUP, Pinion Bearing
	02070317	1	1						Front
		1	5						Front
7									HOUSING, Axle
	04897072AC	1	1						
	04897075AC	1	5						
8									VENT, Axle
	52069896AA	1	1						
		1	5						
9									STUD
	03723668	8	1						Axle Housing to Backing Plate, Mounting
		8	5						Axle Housing to Backing Plate, Mounting

DAKOTA (AN)

SERIES	LINE	BODY	ENGINE	TRANSMISSION
L = Dakota (All)	1 = Dakota 2WD	61 = Regular Cab (112 WB)	EPE = 2.5L 4 Cylinder	DGK = 4 Speed Automatic 42RE
	5 = Dakota 4WD	31 = Club Cab (131 WB)	EHC = 3.9L 6 Cylinder	DGT = 4 Speed Automatic 46RE
		84 = Quad Cab (131 WB)	EML = 5.0L 8 Cylinder	DDC = 5 Speed HD Manual
			EVA = 4.7L Magnum V8	DDK = 5 Speed HD Manual
			EP0 = All 2.5L	DG4 = Multispeed Automatic 45RFE
			EH0 = All 3.9L	DG0 = All Automatic Transmissions
			EM0 = All 5.9L	DBB = All Manual Transmissions
			EV0 = All 4.7L	

Axle,Rear,with Differential and Housing,Corporate 8.25 [DRA]
Figure 3-210

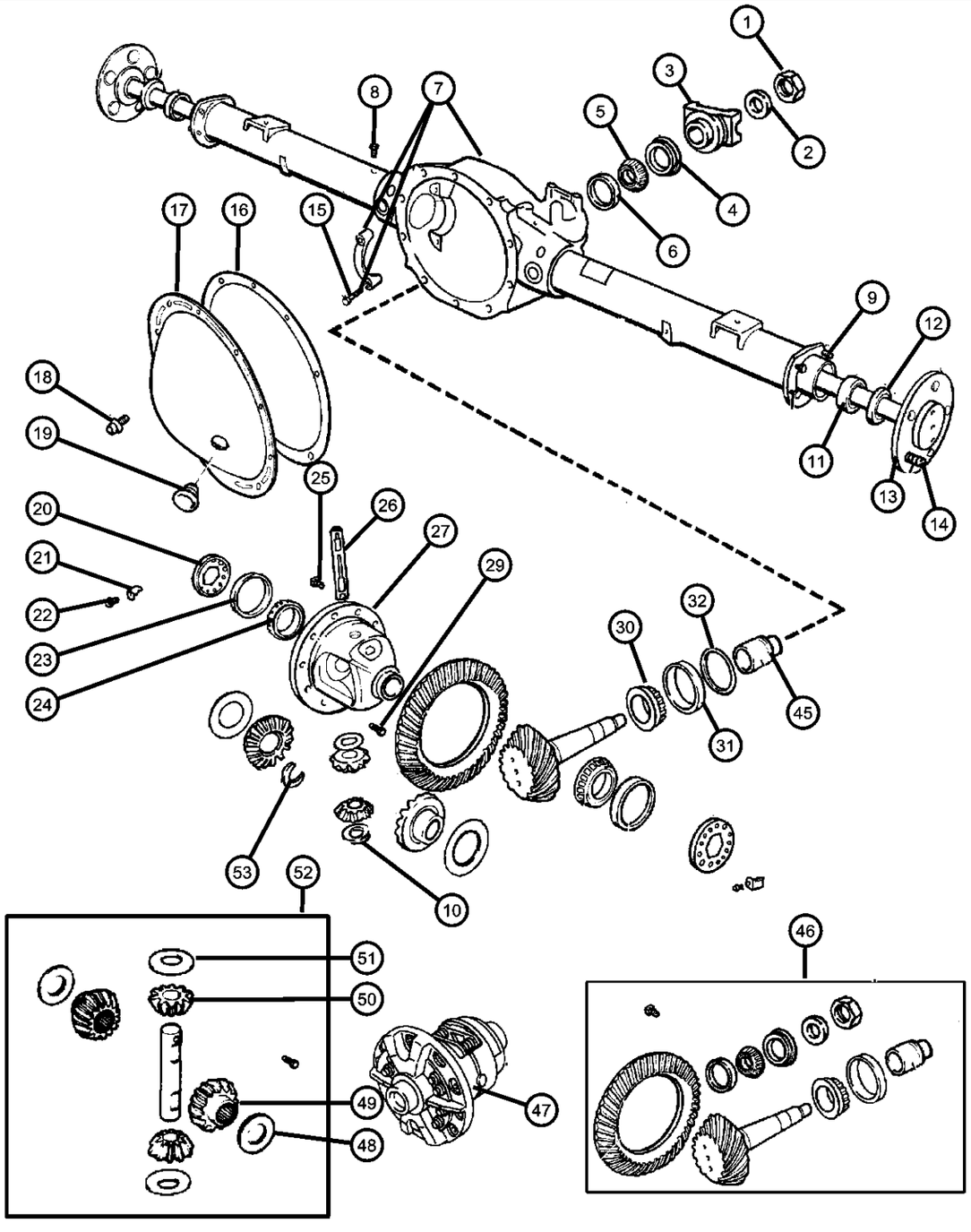

ITEM	PART NUMBER	QTY	LINE	SERIES	BODY	ENGINE	TRANS	TRIM	DESCRIPTION
10									NUT, Hex Flange Lock
	00152345	8	1						Axle Housing to Backing Plate
		8	5						Axle Housing to Backing Plate
11									BEARING, Wheel
	03507898AB	2	1						
		2	5						
12									SEAL, Axle Drive Shaft
	52070427AA	2	1						
	52070427AB	2	5						
13									SHAFT, Axle
	52069512	1	5						Right
		1	1						Right
	52069513	1	1						Left
		1	5						Left
14									STUD, Wheel
	06036123AA	12	1						
		12	5						
15									SCREW, Hex Head, .50-13x2.38
	03432695	4	1						Carrier Bearing Cap, Mounting
		4	5						Carrier Bearing Cap, Mounting
16									SEALANT, RTV
	05010884AA	1	1						
		1	5						
17									COVER, Differential
	03723681AC	1	1						
		1	5						
18									SCREW AND WASHER, Hex Flange Head, .312-18x.562
	06033043	10	1						Differential Cover, Mounting
		10	5						Differential Cover, Mounting
19									PLUG, Differential Cover
	52070428AA	1	5						
		1	1						

DAKOTA (AN)

SERIES	LINE	BODY	ENGINE	TRANSMISSION
L = Dakota (All)	1 = Dakota 2WD	61 = Regular Cab (112 WB)	EPE = 2.5L 4 Cylinder	DGK = 4 Speed Automatic 42RE
	5 = Dakota 4WD	31 = Club Cab (131 WB)	EHC = 3.9L 6 Cylinder	DGT = 4 Speed Automatic 46RE
		84 = Quad Cab (131 WB)	EML = 5.0L 8 Cylinder	DDC = 5 Speed HD Manual
			EVA = 4.7L Magnum V8	DDK = 5 Speed HD Manual
			EP0 = All 2.5L	DG4 = Multispeed Automatic 45RFE
			EH0 = All 3.9L	DG0 = All Automatic Transmissions
			EM0 = All 5.9L	DBB = All Manual Transmissions
			EV0 = All 4.7L	

Axle,Rear,with Differential and Housing,Corporate 8.25 [DRA]
Figure 3-210

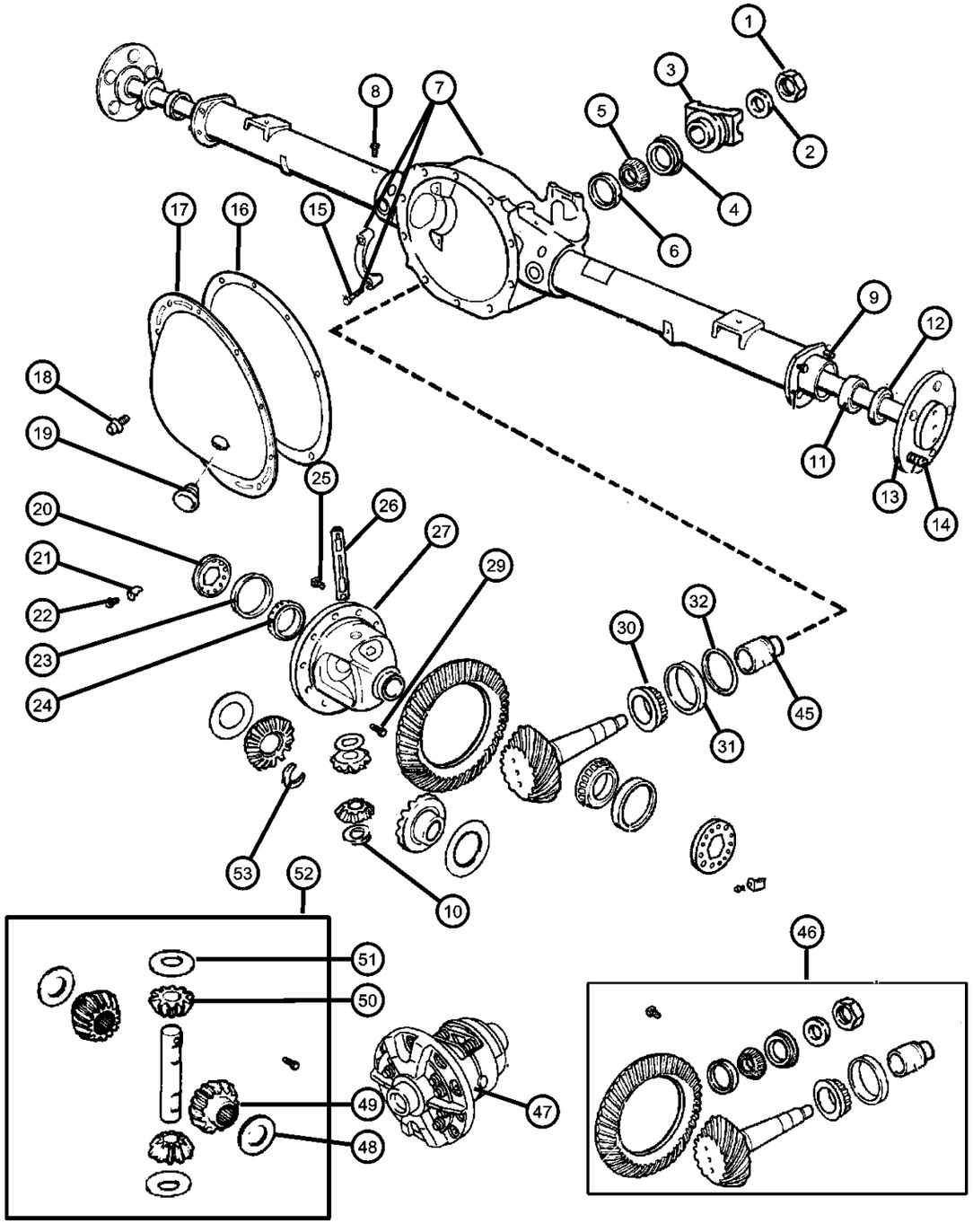

ITEM	PART NUMBER	QTY	LINE	SERIES	BODY	ENGINE	TRANS	TRIM	DESCRIPTION
20									ADJUSTER, Differential Bearing
	03507876	2	1						
		2	5						
21									LOCK, Differential Bearing
	03723859	2	1						
		2	5						
22									SCREW AND WASHER, Hex Head, .25-20x.50
	06023092	2	1						Differential Bearing Lock
		2	5						Differential Bearing Lock
23									CUP, Differential Side
	03723569	2	1						
		2	5						
24									BEARING, Differential
	01790541	2	1						
		2	5						
25									SCREW PACKAGE, Axle Drive Gear
	04443158	1	1						
		1	5						
26									SHAFT, Differential Pinion, Also Serviced In Differential Gear Package
	52069657	1	1						without [DSA]
		1	5						without [DSA]
27									CASE, Differential
	52069428	1	1						without [DSA] without Internal Parts
		1	5						without [DSA] without Internal Parts
-28									TONE RING, Sensor
	04384226	1	1						
		1	5						
29									SCREW, Hex Head, .312-18x1.80, Also Serviced in Differential Gear Package

DAKOTA (AN)

SERIES	LINE	BODY	ENGINE	TRANSMISSION
L = Dakota (All)	1 = Dakota 2WD	61 = Regular Cab (112 WB)	EPE = 2.5L 4 Cylinder	DGK = 4 Speed Automatic 42RE
	5 = Dakota 4WD	31 = Club Cab (131 WB)	EHC = 3.9L 6 Cylinder	DGT = 4 Speed Automatic 46RE
		84 = Quad Cab (131 WB)	EML = 5.0L 8 Cylinder	DDC = 5 Speed HD Manual
			EVA = 4.7L Magnum V8	DDK = 5 Speed HD Manual
			EP0 = All 2.5L	DG4 = Multispeed Automatic 45RFE
			EH0 = All 3.9L	DG0 = All Automatic Transmissions
			EM0 = All 5.9L	DBB = All Manual Transmissions
			EV0 = All 4.7L	

Axle,Rear,with Differential and Housing,Corporate 8.25 [DRA]
Figure 3-210

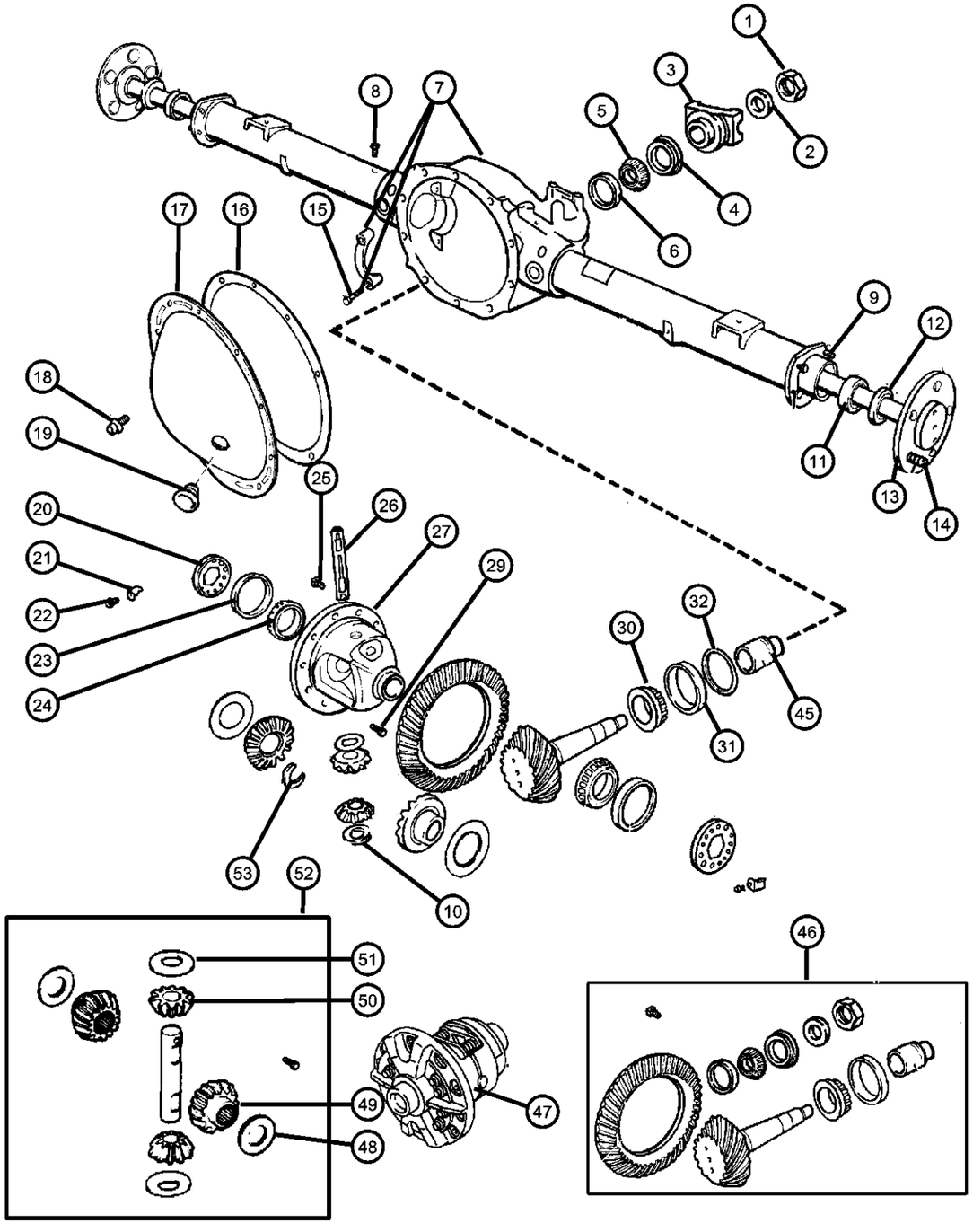

ITEM	PART NUMBER	QTY	LINE	SERIES	BODY	ENGINE	TRANS	TRIM	DESCRIPTION
	03507724	1	5						
		1	1						
30									BEARING, Drive Pinion
	02800484	1	1						Rear
		1	5						Rear
31									CUP, Pinion Bearing
	02800485	1	1						Rear
		1	5						Rear
32									SHIM, Drive Pinion Bearing, 0.020
	03723520	AR	1						
		AR	5						
-33									SHIM, Drive Pinion Bearing, 0.022
	03723522	AR	1						
		AR	5						
-34									SHIM, Drive Pinion Bearing, 0.024
	03723524	AR	5						
		AR	1						
-35									SHIM, Drive Pinion Bearing, 0.026
	03723526	AR	1						
		AR	5						
-36									SHIM, Drive Pinion Bearing, 0.027
	03723527	AR	5						
		AR	1						
-37									SHIM, Drive Pinion Bearing, 0.028
	03723528	AR	1						
		AR	5						
-38									SHIM, Drive Pinion Bearing, 0.029
	03723529	AR	1						
		AR	5						
-39									SHIM, Drive Pinion Bearing, 0.030
	03723530	AR	5						
		AR	1						

DAKOTA (AN)

SERIES	LINE	BODY	ENGINE	TRANSMISSION
L = Dakota (All)	1 = Dakota 2WD	61 = Regular Cab (112 WB)	EPE = 2.5L 4 Cylinder	DGK = 4 Speed Automatic 42RE
	5 = Dakota 4WD	31 = Club Cab (131 WB)	EHC = 3.9L 6 Cylinder	DGT = 4 Speed Automatic 46RE
		84 = Quad Cab (131 WB)	EML = 5.0L 8 Cylinder	DDC = 5 Speed HD Manual
			EVA = 4.7L Magnum V8	DDK = 5 Speed HD Manual
			EP0 = All 2.5L	DG4 = Multispeed Automatic 45RFE
			EH0 = All 3.9L	DG0 = All Automatic Transmissions
			EM0 = All 5.9L	DBB = All Manual Transmissions
			EV0 = All 4.7L	

AR = use ase required - = Non illustrrated part

Axle,Rear,with Differential and Housing,Corporate 8.25 [DRA]
Figure 3-210

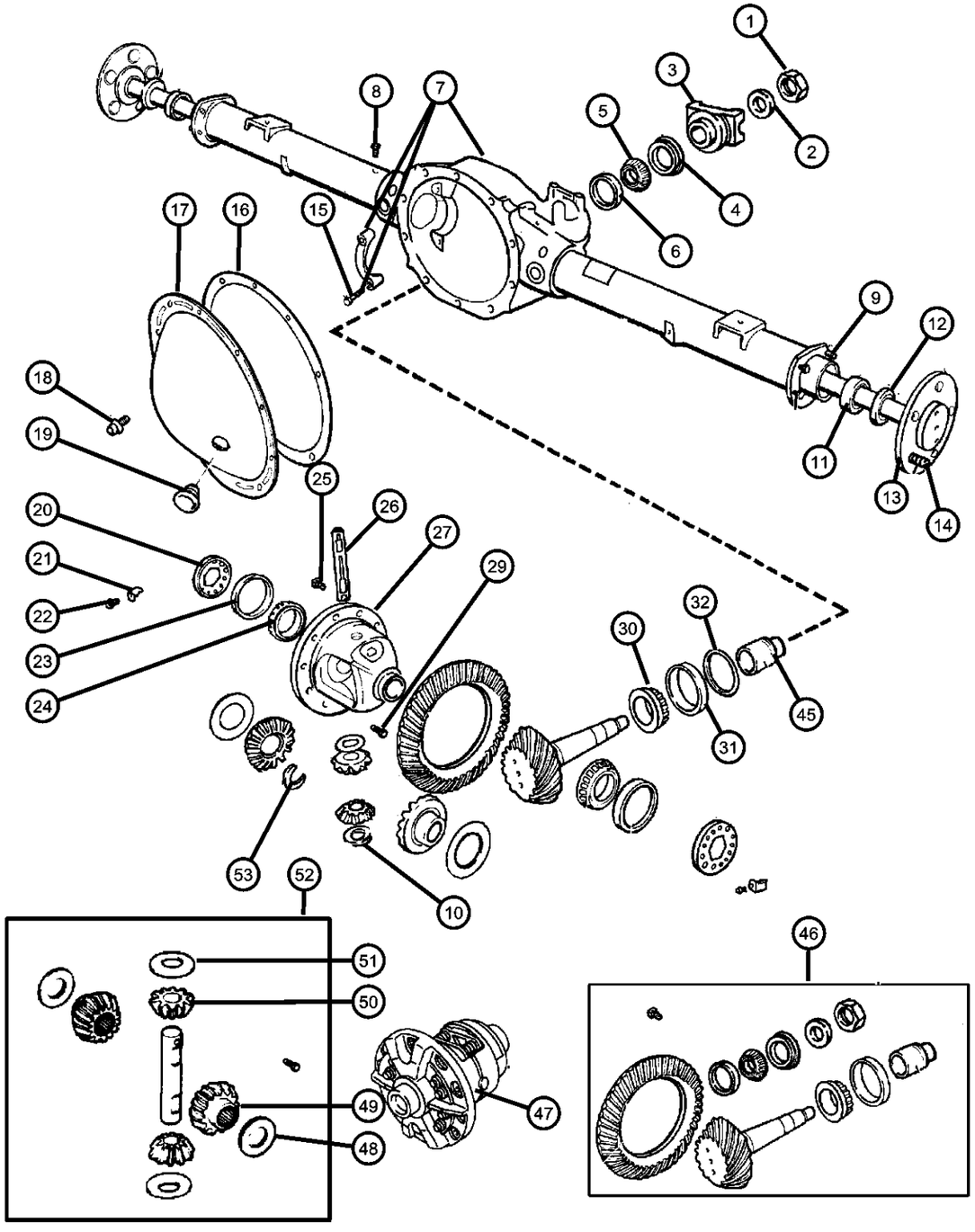

ITEM	PART NUMBER	QTY	LINE	SERIES	BODY	ENGINE	TRANS	TRIM	DESCRIPTION
-40									SHIM, Drive Pinion Bearing, 0.031
	03723531	AR	1						
		AR	5						
-41									SHIM, Drive Pinion Bearing, 0.032
	03723532	AR	1						
		AR	5						
-42									SHIM, Drive Pinion Bearing, 0.034
	03723534	AR	1						
		AR	5						
-43									SHIM, Drive Pinion Bearing, 0.036
	03723536	AR	1						
		AR	5						
-44									SHIM, Drive Pinion Bearing, 0.038
	03723538	AR	1						
		AR	5						
45									SPACER, Drive Pinion Bearing
	03507575	1	5						Crush
		1	1						Crush
46									GEAR KIT, Ring And Pinion
	04856540AC	1	5						[DMD]
		1	1						[DMD]
	04882051AC	1	1						[DMC]
	04882132AC	1	1						[DMH]
		1	5						[DMH]
47									CASE, Differential
	52098778	1	1						[DSA] with Internal Parts
		1	5						[DSA] with Internal Parts
48									WASHER PACKAGE, Side Gear Thrust, Also Serviced In Differential Gear Package
	04883085	1	1						without [DSA]
		1	5						without [DSA]

DAKOTA (AN)

SERIES	LINE	BODY	ENGINE	TRANSMISSION
L = Dakota (All)	1 = Dakota 2WD	61 = Regular Cab (112 WB)	EPE = 2.5L 4 Cylinder	DGK = 4 Speed Automatic 42RE
	5 = Dakota 4WD	31 = Club Cab (131 WB)	EHC = 3.9L 6 Cylinder	DGT = 4 Speed Automatic 46RE
		84 = Quad Cab (131 WB)	EML = 5.0L 8 Cylinder	DDC = 5 Speed HD Manual
			EVA = 4.7L Magnum V8	DDK = 5 Speed HD Manual
			EP0 = All 2.5L	DG4 = Multispeed Automatic 45RFE
			EH0 = All 3.9L	DG0 = All Automatic Transmissions
			EM0 = All 5.9L	DBB = All Manual Transmissions
			EV0 = All 4.7L	

Axle,Rear,with Differential and Housing,Corporate 8.25 [DRA]
Figure 3-210

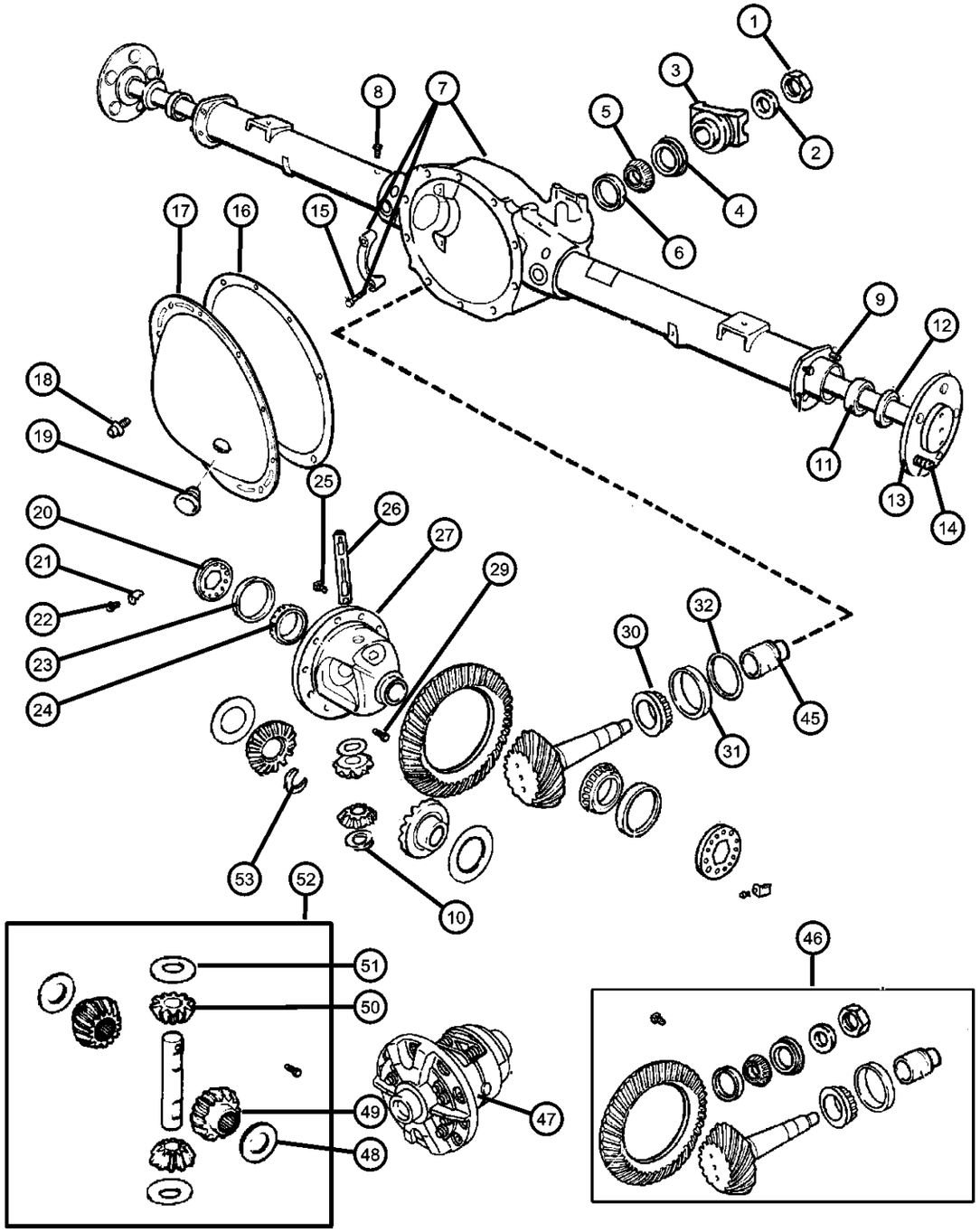

ITEM	PART NUMBER	QTY	LINE	SERIES	BODY	ENGINE	TRANS	TRIM	DESCRIPTION
49									GEAR, Differential, Also Serviced In Differential Gear Package
	52069429	2	5						without [DSA]
		2	1						without [DSA]
50									PINION, Differential, Also Serviced In Differential Gear Package
	52069655	2	1						
		2	5						without [DSA]
51									WASHER, Pinion Thrust, Also Serviced In Differential Gear Package
	02852912	2	1						
		2	5						without [DSA]
52									GEAR PACKAGE, Differential
	04883087	1	1						without [DSA]
		1	5						without [DSA]
53									RETAINER, Axle Shaft
	52069426	2	1						
		2	5						

DAKOTA (AN)

SERIES	LINE	BODY	ENGINE	TRANSMISSION
L = Dakota (All)	1 = Dakota 2WD	61 = Regular Cab (112 WB)	EPE = 2.5L 4 Cylinder	DGK = 4 Speed Automatic 42RE
	5 = Dakota 4WD	31 = Club Cab (131 WB)	EHC = 3.9L 6 Cylinder	DGT = 4 Speed Automatic 46RE
		84 = Quad Cab (131 WB)	EML = 5.0L 8 Cylinder	DDC = 5 Speed HD Manual
			EVA = 4.7L Magnum V8	DDK = 5 Speed HD Manual
			EP0 = All 2.5L	DG4 = Multispeed Automatic 45RFE
			EH0 = All 3.9L	DG0 = All Automatic Transmissions
			EM0 = All 5.9L	DBB = All Manual Transmissions
			EV0 = All 4.7L	

Axle,Rear,with Differential and Housing,Corporate 9.25LD [DRB]
Figure 3-220

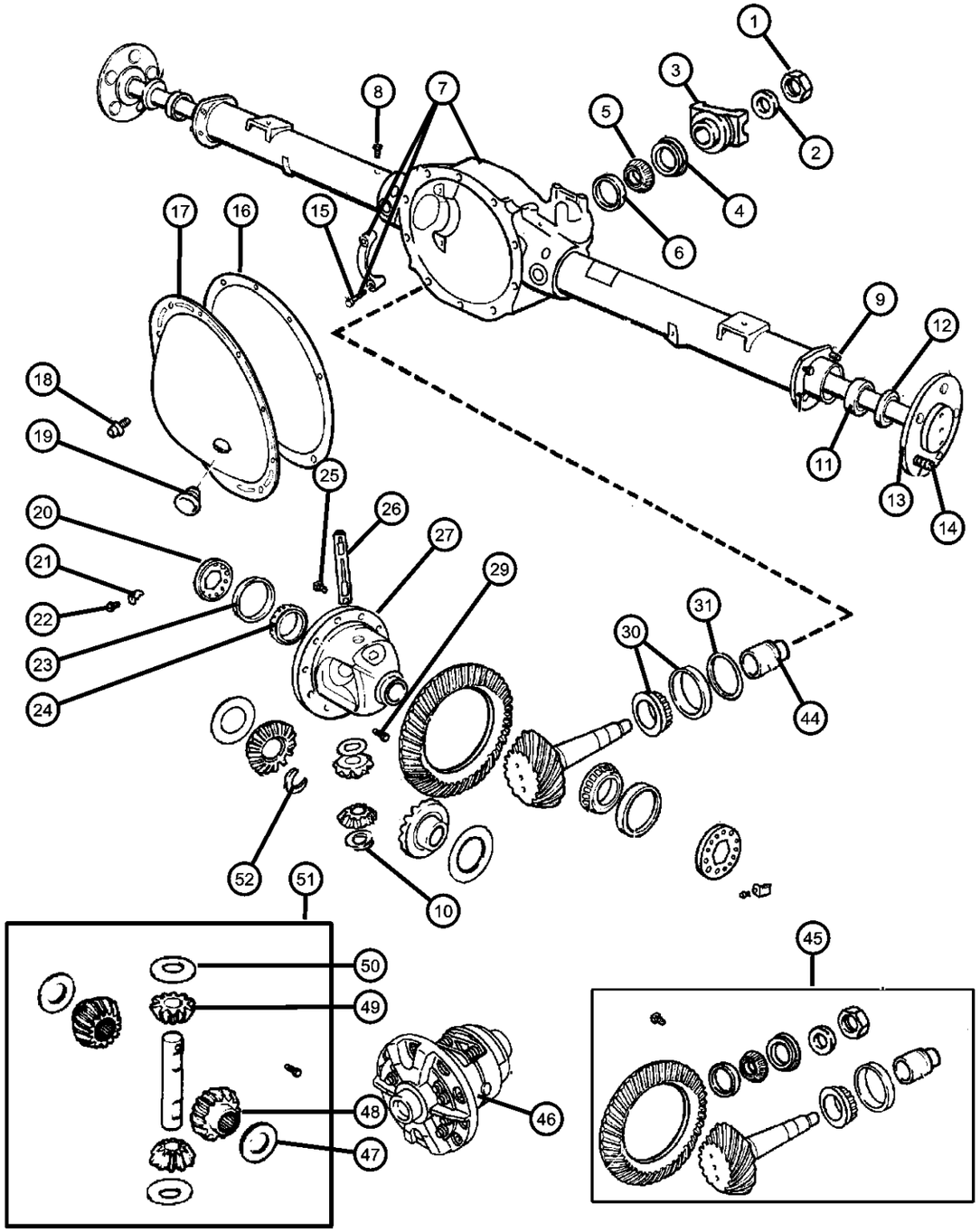

ITEM	PART NUMBER	QTY	LINE	SERIES	BODY	ENGINE	TRANS	TRIM	DESCRIPTION
Note:Sales Codes;									
[DMD]=Axle Ratio - 3.55									
[DMH]=Axle Ratio - 3.92									
[DRB]=Axle - Rear,Corporate 9.25LD									
[DSA] =Axle - Anti-Spin Differential									
1									NUT, Pinion Yoke
	06028041	1	1						
		1	5						
2									WASHER, Pinion Yoke
	02070117	1	1						
		1	5						
3									FLANGE, Driveshaft Yoke
	52105064	1	1						
		1	5						
4									SEAL, Drive Pinion
	52070340AA	1	1						
		1	5						
5									BEARING, Drive Pinion
	01820552	1	1						Front
		1	5						Front
6									CUP, Pinion Bearing
	01820551	1	1						Front
		1	5						Front
7									HOUSING, Axle
	05003676AB	1	1						
	05003678AB	1	5						
8									VENT, Axle
	52069896AA	1	1						
		1	5						
9									STUD
	03723668	8	1						Axle Housing to Backing Plate, Mounting
		8	5						Axle Housing to Backing Plate, Mounting
10									NUT

DAKOTA (AN)

SERIES	LINE	BODY	ENGINE	TRANSMISSION
L = Dakota (All)	1 = Dakota 2WD	61 = Regular Cab (112 WB)	EPE = 2.5L 4 Cylinder	DGK = 4 Speed Automatic 42RE
	5 = Dakota 4WD	31 = Club Cab (131 WB)	EHC = 3.9L 6 Cylinder	DGT = 4 Speed Automatic 46RE
		84 = Quad Cab (131 WB)	EML = 5.0L 8 Cylinder	DDC = 5 Speed HD Manual
			EVA = 4.7L Magnum V8	DDK = 5 Speed HD Manual
			EP0 = All 2.5L	DG4 = Multispeed Automatic 45RFE
			EH0 = All 3.9L	DG0 = All Automatic Transmissions
			EM0 = All 5.9L	DBB = All Manual Transmissions
			EV0 = All 4.7L	

Axle,Rear,with Differential and Housing,Corporate 9.25LD [DRB]
Figure 3-220

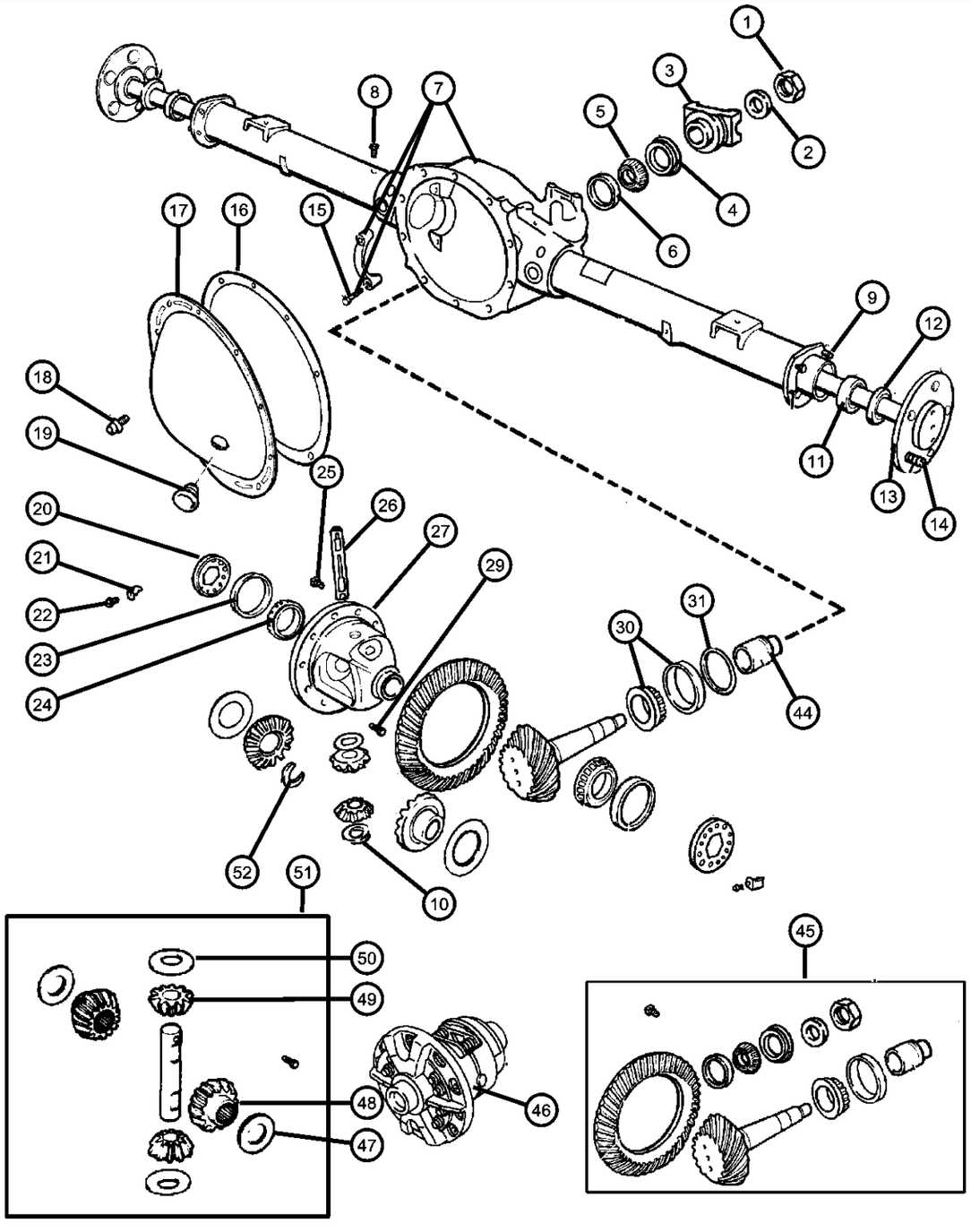

ITEM	PART NUMBER	QTY	LINE	SERIES	BODY	ENGINE	TRANS	TRIM	DESCRIPTION
	00152345	8	1						Axle Housing to Backing Plate, Mounting
		8	5						Axle Housing to Backing Plate, Mounting
11									BEARING, Wheel
	03507898AB	2	1						
		2	5						
12									SEAL, Axle Drive Shaft
	04137426	2	1						
		2	5						
13									SHAFT, Axle
	52069388	1	1						Right
		1	5						Right
	52069389	1	1						Left
		1	5						Left
14									STUD, Wheel
	06036123AA	12	1						
		12	5						
15									SCREW, Hex Head, .50-13x2.38
	03432695	4	1						Carrier Bearing Cap, Mounting
		4	5						Carrier Bearing Cap, Mounting
16									SEALANT, RTV
	05010884AA	1	1						
		1	5						
17									COVER, Differential
	04384293AC	1	1						
		1	5						
18									SCREW AND WASHER, Hex Flange Head, .312-18x.562
	06033043	12	1						Differential Cover, Mounting
		12	5						Differential Cover, Mounting
19									PLUG, Differential Cover
	52070428AA	1	1						
		1	5						

DAKOTA (AN)

SERIES	LINE	BODY	ENGINE	TRANSMISSION
L = Dakota (All)	1 = Dakota 2WD	61 = Regular Cab (112 WB)	EPE = 2.5L 4 Cylinder	DGK = 4 Speed Automatic 42RE
	5 = Dakota 4WD	31 = Club Cab (131 WB)	EHC = 3.9L 6 Cylinder	DGT = 4 Speed Automatic 46RE
		84 = Quad Cab (131 WB)	EML = 5.0L 8 Cylinder	DDC = 5 Speed HD Manual
			EVA = 4.7L Magnum V8	DDK = 5 Speed HD Manual
			EP0 = All 2.5L	DG4 = Multispeed Automatic 45RFE
			EH0 = All 3.9L	DG0 = All Automatic Transmissions
			EM0 = All 5.9L	DBB = All Manual Transmissions
			EV0 = All 4.7L	

Axle,Rear,with Differential and Housing,Corporate 9.25LD [DRB]
Figure 3-220

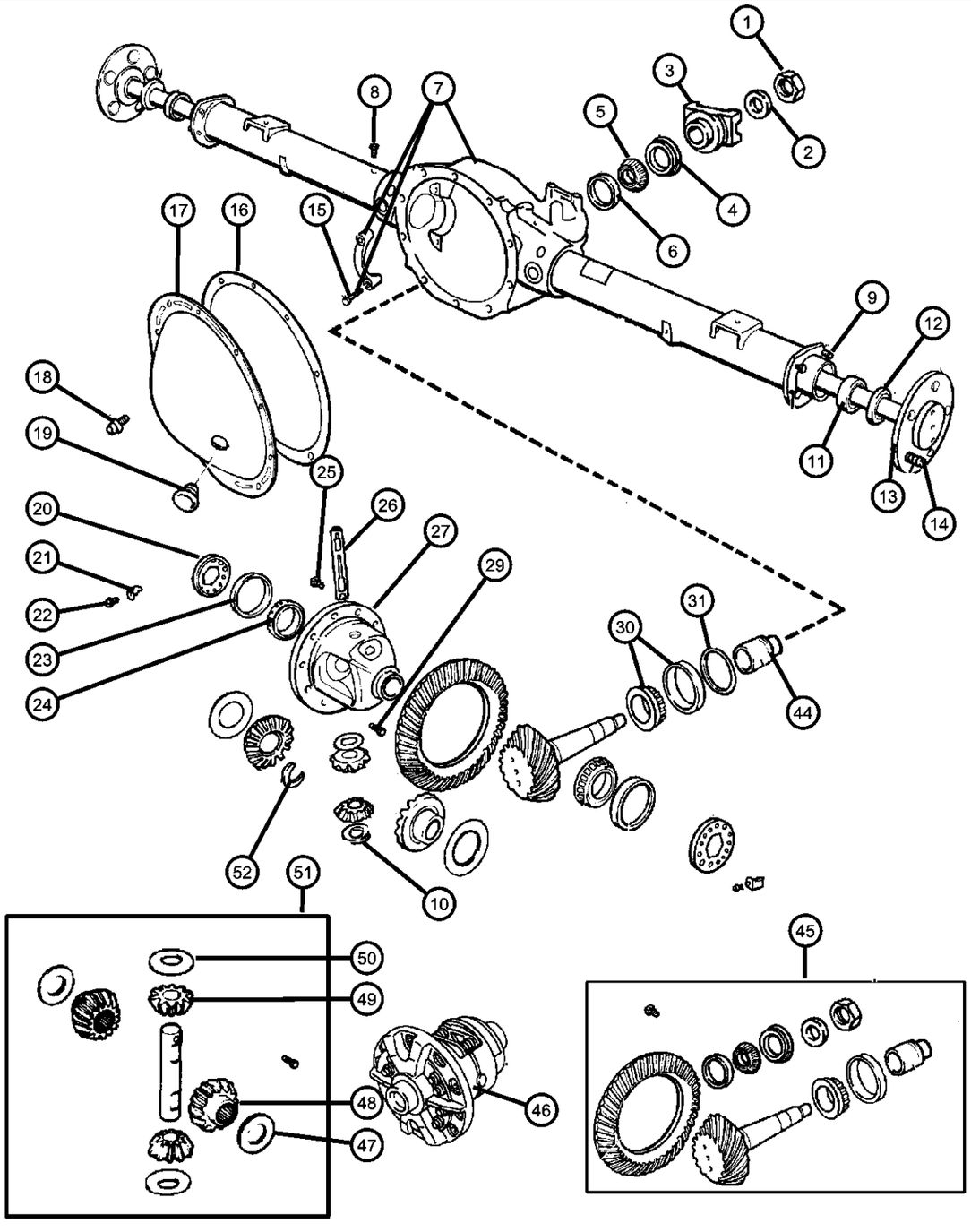

ITEM	PART NUMBER	QTY	LINE	SERIES	BODY	ENGINE	TRANS	TRIM	DESCRIPTION
20									ADJUSTER, Differential Bearing
	03507723	2	1						
		2	5						
21									LOCK, Differential Bearing
	03723858	2	1						
		2	5						
22									SCREW AND WASHER, Hex Head, .25-20x.50
	06023092	2	1						Differential Bearing Lock
		2	5						Differential Bearing Lock
23									CUP, Differential Side
	03723148	2	1						
		2	5						
24									BEARING, Differential
	03723149	2	1						
		2	5						
25									SCREW, Hex Flange Head, .437-20x.88
	06036054AA	12	1						Ring Gear, Mounting
		12	5						Ring Gear, Mounting
26									SHAFT, Differential, Also Serviced In Differential Gear Package
	01633928	1	1						without [DSA]
		1	5						without [DSA]
27									CASE, Differential
	04384222	1	1						without[DSA] without Internal Parts
		1	5						without[DSA] without Internal Parts
-28									TONE RING, Sensor
	04384227	1	1						
		1	5						
29									SCREW, Hex Head, .312-18x1.80, Also Serviced in Differential Gear Package
	03507724	2	1						

DAKOTA (AN)

SERIES	LINE	BODY	ENGINE	TRANSMISSION
L = Dakota (All)	1 = Dakota 2WD	61 = Regular Cab (112 WB)	EPE = 2.5L 4 Cylinder	DGK = 4 Speed Automatic 42RE
	5 = Dakota 4WD	31 = Club Cab (131 WB)	EHC = 3.9L 6 Cylinder	DGT = 4 Speed Automatic 46RE
		84 = Quad Cab (131 WB)	EML = 5.0L 8 Cylinder	DDC = 5 Speed HD Manual
			EVA = 4.7L Magnum V8	DDK = 5 Speed HD Manual
			EP0 = All 2.5L	DG4 = Multispeed Automatic 45RFE
			EH0 = All 3.9L	DG0 = All Automatic Transmissions
			EM0 = All 5.9L	DBB = All Manual Transmissions
			EV0 = All 4.7L	

Axle,Rear,with Differential and Housing,Corporate 9.25LD [DRB]
Figure 3-220

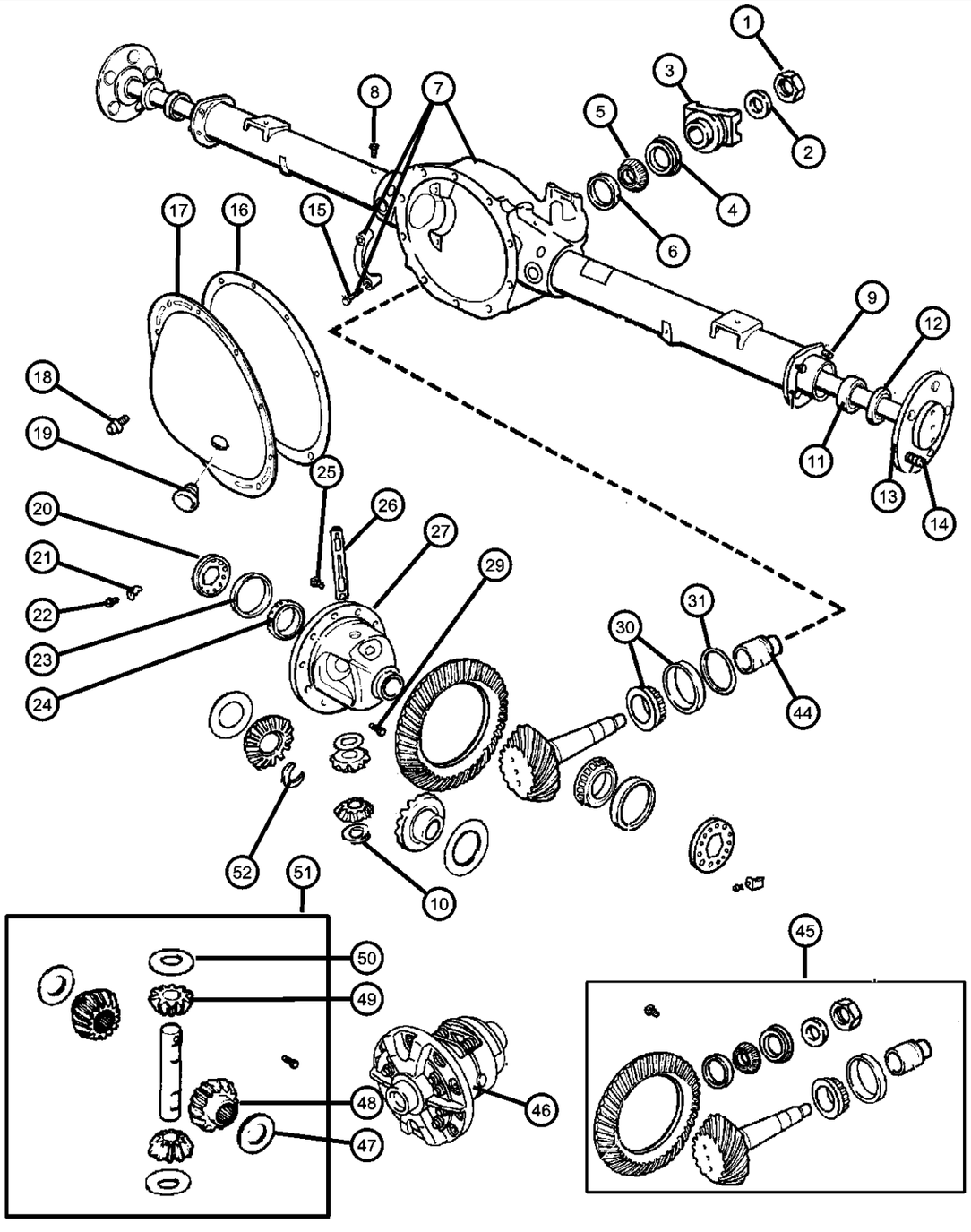

ITEM	PART NUMBER	QTY	LINE	SERIES	BODY	ENGINE	TRANS	TRIM	DESCRIPTION
		2	5						
30									BEARING, Drive Pinion
	05017438AA	1	1						Bearing and Cup, Rear
		1	5						Bearing and Cup, Rear
31									SHIM, Drive Pinion Bearing, 0.020
	03432320	AR	1						
		AR	5						
-32									SHIM, Drive Pinion Bearing, 0.022
	03432322	AR	1						
		AR	5						
-33									SHIM, Drive Pinion Bearing, 0.024
	03432324	AR	1						
		AR	5						
-34									SHIM, Drive Pinion Bearing, 0.026
	03432326	AR	1						
		AR	5						
-35									SHIM, Drive Pinion Bearing, 0.027
	03432327	AR	1						
		AR	5						
-36									SHIM, Drive Pinion Bearing, 0.028
	03432328	AR	1						
		AR	5						
-37									SHIM, Drive Pinion Bearing, 0.029
	03432329	AR	1						
		AR	5						
-38									SHIM, Drive Pinion Bearing, 0.030
	03432330	AR	1						
		AR	5						
-39									SHIM, Drive Pinion Bearing, 0.031
	03432331	AR	1						
		AR	5						
-40									SHIM, Drive Pinion Bearing, 0.032

DAKOTA (AN)

SERIES	LINE	BODY	ENGINE	TRANSMISSION
L = Dakota (All)	1 = Dakota 2WD	61 = Regular Cab (112 WB)	EPE = 2.5L 4 Cylinder	DGK = 4 Speed Automatic 42RE
	5 = Dakota 4WD	31 = Club Cab (131 WB)	EHC = 3.9L 6 Cylinder	DGT = 4 Speed Automatic 46RE
		84 = Quad Cab (131 WB)	EML = 5.0L 8 Cylinder	DDC = 5 Speed HD Manual
			EVA = 4.7L Magnum V8	DDK = 5 Speed HD Manual
			EP0 = All 2.5L	DG4 = Multispeed Automatic 45RFE
			EH0 = All 3.9L	DG0 = All Automatic Transmissions
			EM0 = All 5.9L	DBB = All Manual Transmissions
			EV0 = All 4.7L	

AR = use ase required - = Non illustrrated part

Axle,Rear,with Differential and Housing,Corporate 9.25LD [DRB]
Figure 3-220

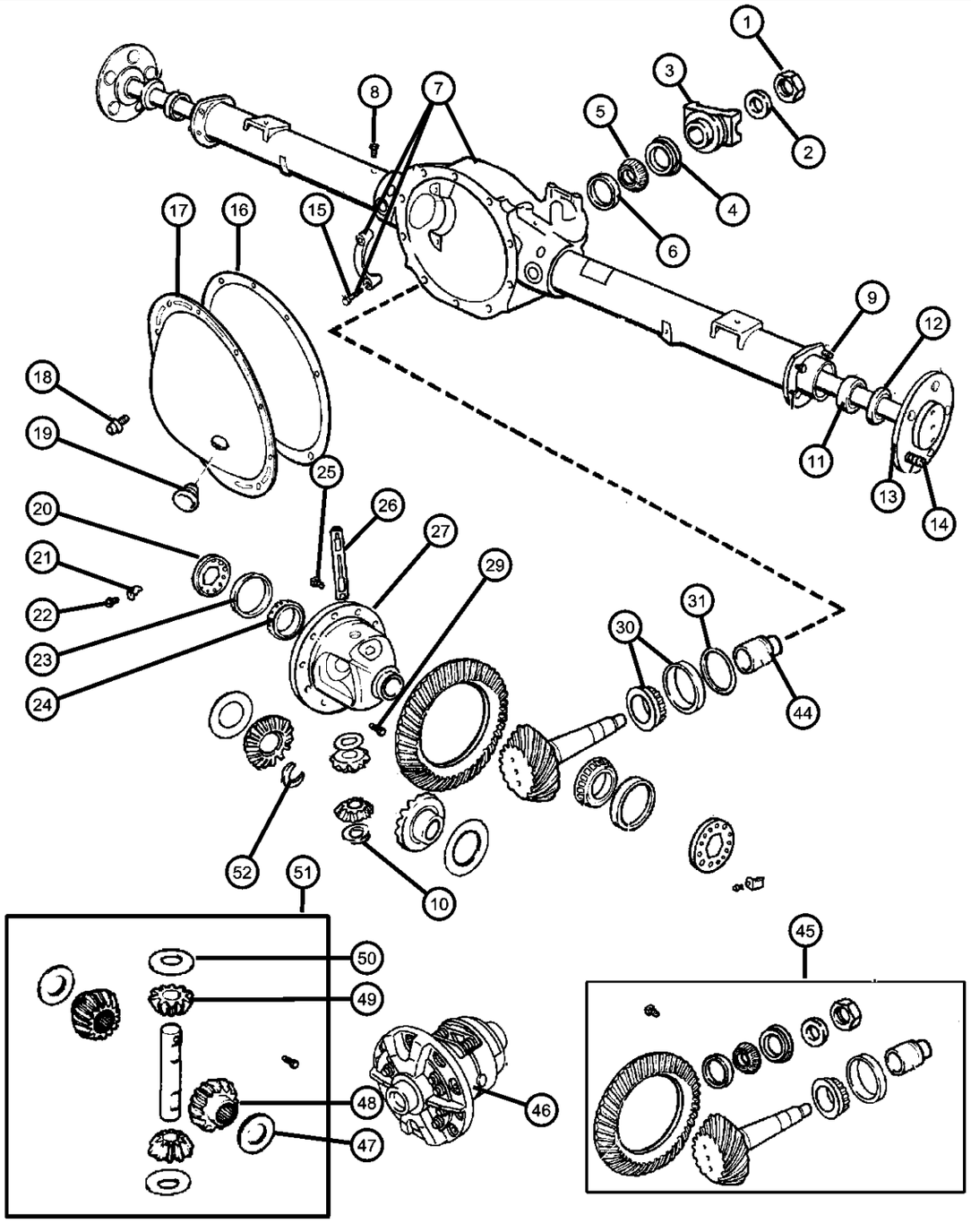

ITEM	PART NUMBER	QTY	LINE	SERIES	BODY	ENGINE	TRANS	TRIM	DESCRIPTION
	03432332	AR	1						
		AR	5						
-41									SHIM, Drive Pinion Bearing, 0.034
	03432334	AR	1						
		AR	5						
-42									SHIM, Drive Pinion Bearing, 0.036
	03432336	AR	1						
		AR	5						
-43									SHIM, Drive Pinion Bearing, 0.038
	03432338	AR	1						
		AR	5						
44									SPACER, Drive Pinion Bearing
	03507678	1	1						Crush
		1	5						Crush
45									GEAR KIT, Ring And Pinion
	05010321AC	1	1						[DMH]
		1	5						[DMH]
	05010322AE	1	1						[DMD]
		1	5						[DMD]
46									CASE, Differential
	52068450	1	1						[DSA] with Internal Parts
		1	5						[DSA] with Internal Parts
47									WASHER PACKAGE, Side Gear Thrust, Also Serviced In Differential Gear Package
	04131294	1	1						without [DSA]
		1	5						without [DSA]
48		1							GEAR, Differential, Serviced In Differential Gear Package Only, (NOT SERVICED),
49		1							PINION, Differential, Serviced In Differential Gear Package Only, (NOT SERVICED)
50									WASHER, Pinion Thrust, Also Serviced In Differential Gear Package

DAKOTA (AN)

SERIES	LINE	BODY	ENGINE	TRANSMISSION
L = Dakota (All)	1 = Dakota 2WD 5 = Dakota 4WD	61 = Regular Cab (112 WB) 31 = Club Cab (131 WB) 84 = Quad Cab (131 WB)	EPE = 2.5L 4 Cylinder EHC = 3.9L 6 Cylinder EML = 5.0L 8 Cylinder EVA = 4.7L Magnum V8 EP0 = All 2.5L EH0 = All 3.9L EM0 = All 5.9L EV0 = All 4.7L	DGK = 4 Speed Automatic 42RE DGT = 4 Speed Automatic 46RE DDC = 5 Speed HD Manual DDK = 5 Speed HD Manual DG4 = Multispeed Automatic 45RFE DG0 = All Automatic Transmissions DBB = All Manual Transmissions

AR = use ase required - = Non illustrrated part

Axle,Rear,with Differential and Housing,Corporate 9.25LD [DRB]
Figure 3-220

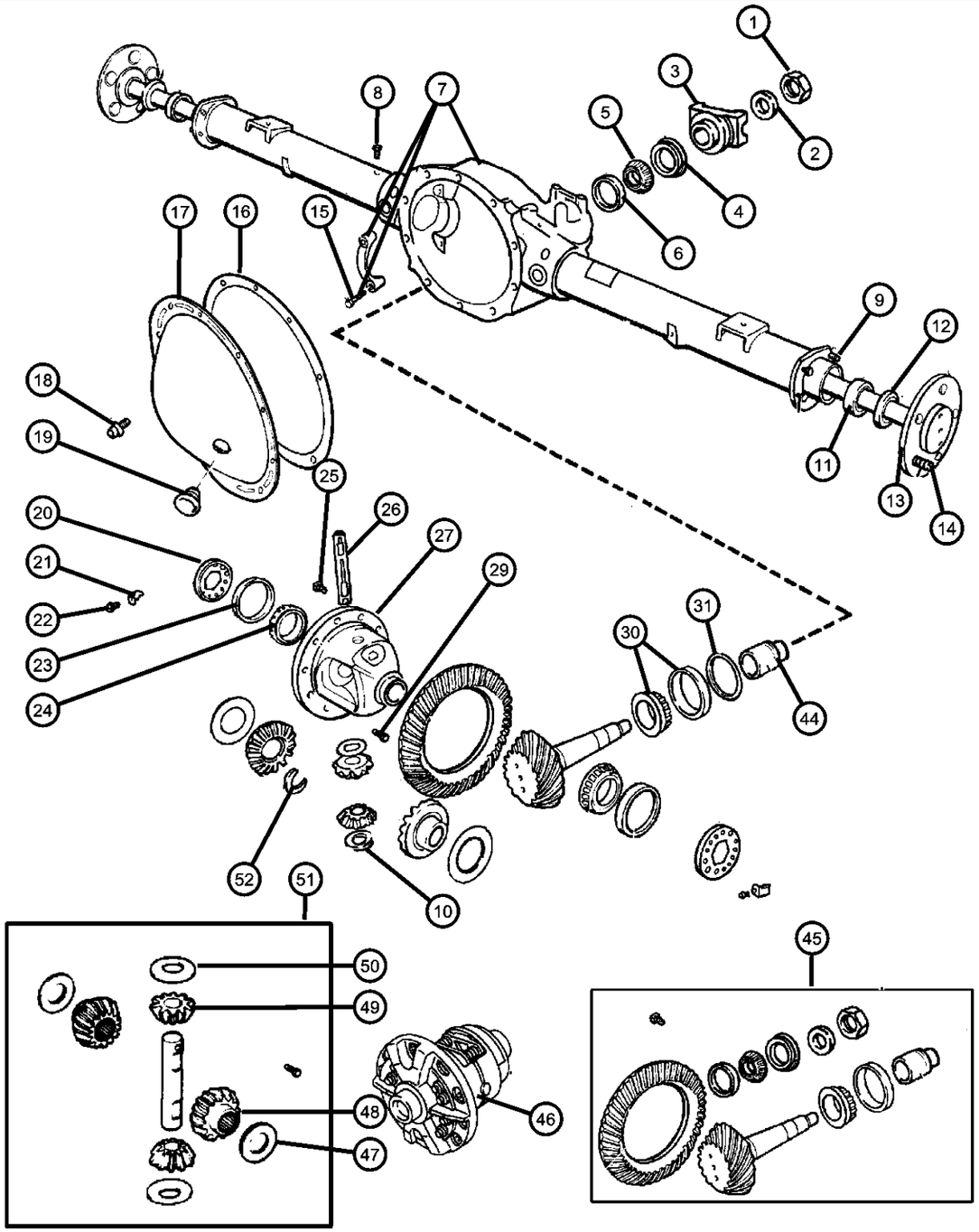

ITEM	PART NUMBER	QTY	LINE	SERIES	BODY	ENGINE	TRANS	TRIM	DESCRIPTION
	03507641	2	1						without [DSA]
		2	5						without [DSA]
51									GEAR PACKAGE, Differential
	04798912AB	1	1						without [DSA]
		1	5						without [DSA]
52									LOCK, Drive Shaft
	04137669	2	1						
		2	5						

DAKOTA (AN)

SERIES	LINE	BODY	ENGINE	TRANSMISSION
L = Dakota (All)	1 = Dakota 2WD	61 = Regular Cab (112 WB)	EPE = 2.5L 4 Cylinder	DGK = 4 Speed Automatic 42RE
	5 = Dakota 4WD	31 = Club Cab (131 WB)	EHC = 3.9L 6 Cylinder	DGT = 4 Speed Automatic 46RE
		84 = Quad Cab (131 WB)	EML = 5.0L 8 Cylinder	DDC = 5 Speed HD Manual
			EVA = 4.7L Magnum V8	DDK = 5 Speed HD Manual
			EP0 = All 2.5L	DG4 = Multispeed Automatic 45RFE
			EH0 = All 3.9L	DG0 = All Automatic Transmissions
			EM0 = All 5.9L	DBB = All Manual Transmissions
			EV0 = All 4.7L	

Vent,Axle
Figure 3-310

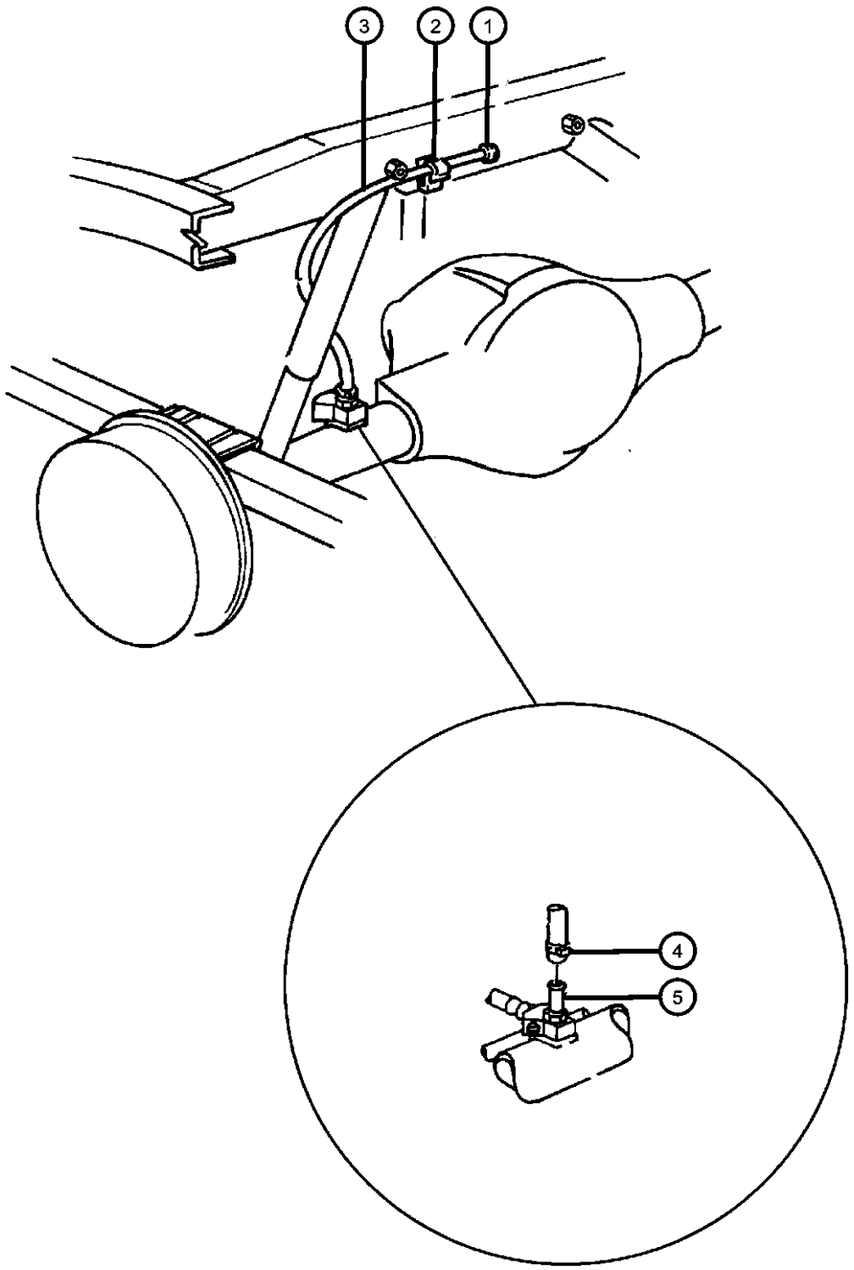

ITEM	PART NUMBER	QTY	LINE	SERIES	BODY	ENGINE	TRANS	TRIM	DESCRIPTION
1	52067516	1							CAP, Rear Axle Vent
2	34175327	1							CLIP, Conduit Convoluted
3	52099476AA	1							HOSE, Axle Vent
4	02448761	1							CLAMP, Hose
5									VENT, Axle
	52069896AA	1	1						
		1	5						

DAKOTA (AN)

SERIES	LINE	BODY	ENGINE	TRANSMISSION
L = Dakota (All)	1 = Dakota 2WD	61 = Regular Cab (112 WB)	EPE = 2.5L 4 Cylinder	DGK = 4 Speed Automatic 42RE
	5 = Dakota 4WD	31 = Club Cab (131 WB)	EHC = 3.9L 6 Cylinder	DGT = 4 Speed Automatic 46RE
		84 = Quad Cab (131 WB)	EML = 5.0L 8 Cylinder	DDC = 5 Speed HD Manual
			EVA = 4.7L Magnum V8	DDK = 5 Speed HD Manual
			EP0 = All 2.5L	DG4 = Multispeed Automatic 45RFE
			EH0 = All 3.9L	DG0 = All Automatic Transmissions
			EM0 = All 5.9L	DBB = All Manual Transmissions
			EV0 = All 4.7L	

Group - 4

Parking Brake

004-100 Parking Brake Lever and Cables 			

Group - 4 Parking Brake

Illustration Title — Group-Fig. No.

Parking Brake Lever and Cables

Parking Brake Lever ..... Fig. 4 - 110
Parking Brake Cables ..... Fig. 4 - 120

Parking Brake Lever
Figure 4-110

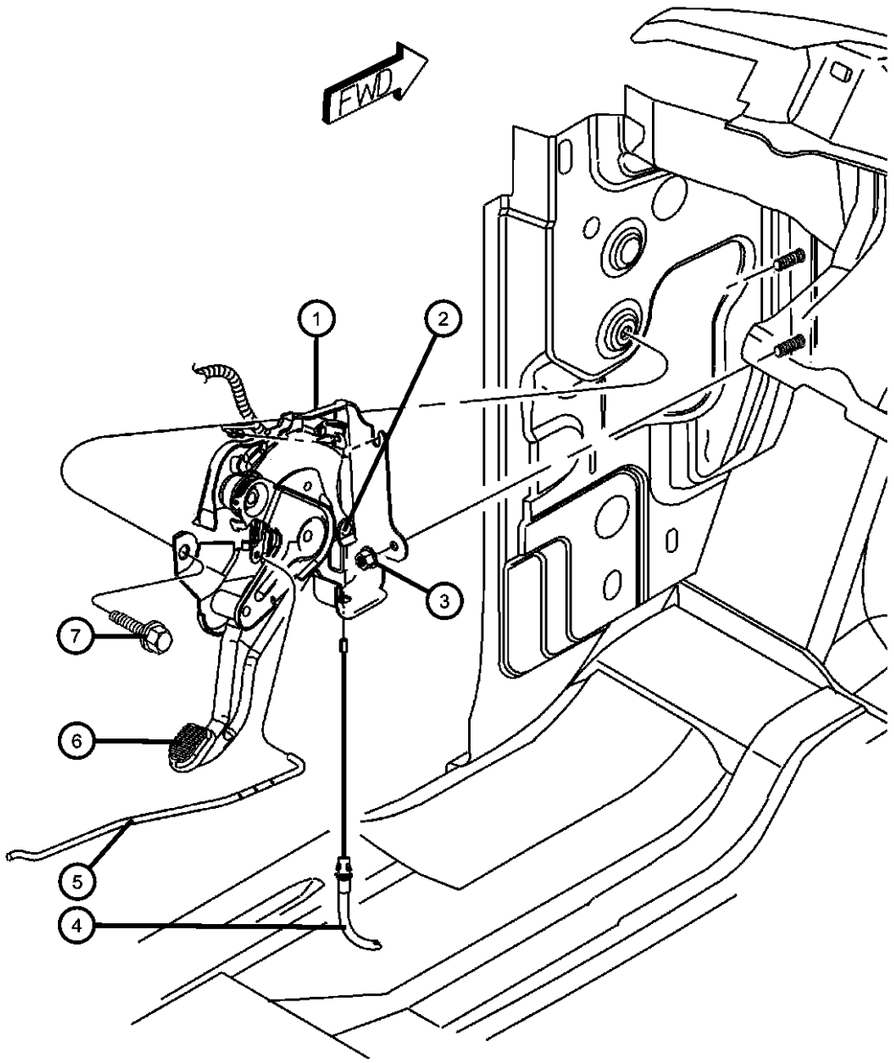

ITEM	PART NUMBER	QTY	LINE	SERIES	BODY	ENGINE	TRANS	TRIM	DESCRIPTION
1	52078976AG	1							LEVER, Park Brake, Includes Items 2,6
2	04221463	1							SWITCH, Parking Brake
3	34201711	2							NUT, Hex Flange, M8x1.25, Park Brake Lever to Dash Panel, Mounting
4	52009869AC	1							CABLE, Parking BrakeFront
5	52078977AD	1							ROD, Parking Brake Release
6	04019175	1							PAD, Parking Brake Pedal
7	06504306	1							SCREW, Tapping, Park Brake Lever to Cowl, Mounting
-8	03454220	1							CLIP, Parking Brake Cable, Release Rod, Mounting

DAKOTA (AN)

SERIES	LINE	BODY	ENGINE	TRANSMISSION
L = Dakota (All)	1 = Dakota 2WD	61 = Regular Cab (112 WB)	EPE = 2.5L 4 Cylinder	DGK = 4 Speed Automatic 42RE
	5 = Dakota 4WD	31 = Club Cab (131 WB)	EHC = 3.9L 6 Cylinder	DGT = 4 Speed Automatic 46RE
		84 = Quad Cab (131 WB)	EML = 5.0L 8 Cylinder	DDC = 5 Speed HD Manual
			EVA = 4.7L Magnum V8	DDK = 5 Speed HD Manual
			EP0 = All 2.5L	DG4 = Multispeed Automatic 45RFE
			EH0 = All 3.9L	DG0 = All Automatic Transmissions
			EM0 = All 5.9L	DBB = All Manual Transmissions
			EV0 = All 4.7L	

Parking Brake Cables
Figure 4-120

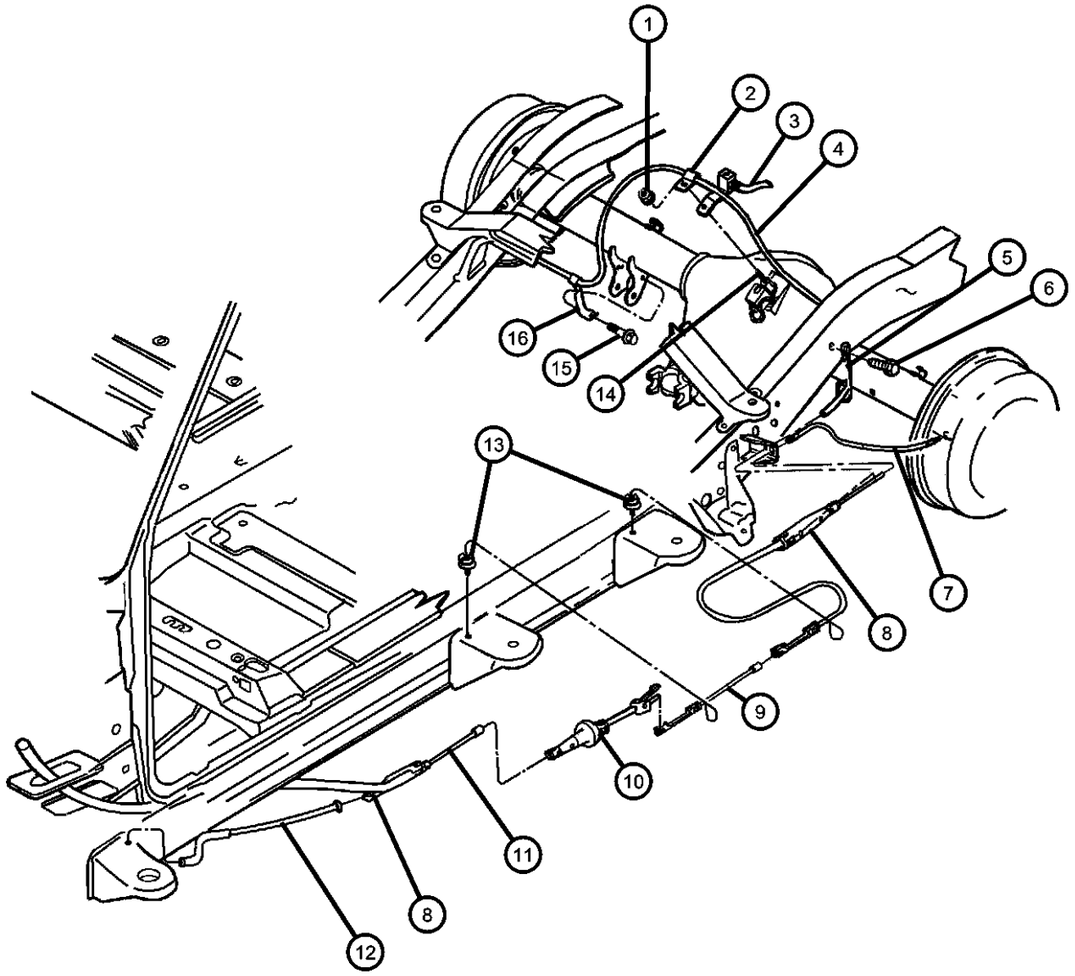

ITEM	PART NUMBER	QTY	LINE	SERIES	BODY	ENGINE	TRANS	TRIM	DESCRIPTION
1	00152472	1							NUT, Hex Flange Lock, .312-18, Locking Clip to RWAL Stud, Mounting
2	00152472	1							CLIP, Brake Cable, 23x45x.76, Order #4, (NOT SERVICED)
3	52008984AE	1							HOSE, BrakeRear
4									CABLE, Parking Brake
	52009870AC	1	1						Right Rear
	52021724AA	1	5						Right Rear
5	52009772AB	1							GUIDE, Parking Brake Cable
6	34201888	1							SCREW, Hex Head, Parking Brake Cable Guide, Mounting
7									CABLE, Parking Brake
	52009871AA	1	1						Left Rear
	52009872AA	1	5						Left Rear
8	52009494	2							CONNECTOR, Parking Brake Cable
9									CABLE, Parking Brake Extension
	52009086	1			31				
	52010067AA	1			84				
10	52021721AA	1							TENSIONER, Parking Brake Cable
11	52009869AC	1							CABLE, Parking BrakeFront
12	52009273AB	1							CABLE, Parking Brake, Reaction, Front
13									CLIP, Tube
	32000404	1			31, 61				Brake, Mounting
		2			84				Brake, Mounting
14	06035887	1							STUD, Axle Housing, Sensor, Mounting
15	06503571	1							SCREW AND WASHER, M10x1.50x35, Parking Brake Cable to Axle, Mounting
16	06503571	1							CLAMP, Cable, Order #4, (NOT SERVICED)

DAKOTA (AN)

SERIES	LINE	BODY	ENGINE	TRANSMISSION
L = Dakota (All)	1 = Dakota 2WD	61 = Regular Cab (112 WB)	EPE = 2.5L 4 Cylinder	DGK = 4 Speed Automatic 42RE
	5 = Dakota 4WD	31 = Club Cab (131 WB)	EHC = 3.9L 6 Cylinder	DGT = 4 Speed Automatic 46RE
		84 = Quad Cab (131 WB)	EML = 5.0L 8 Cylinder	DDC = 5 Speed HD Manual
			EVA = 4.7L Magnum V8	DDK = 5 Speed HD Manual
			EP0 = All 2.5L	DG4 = Multispeed Automatic 45RFE
			EH0 = All 3.9L	DG0 = All Automatic Transmissions
			EM0 = All 5.9L	DBB = All Manual Transmissions
			EV0 = All 4.7L	

Group - 5

Service Brakes

005-100 Front Brakes 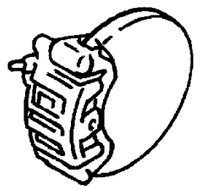	**005-200** Rear Brakes 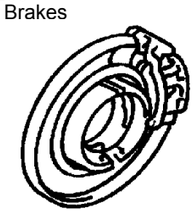	**005-300** Power Brake Booster 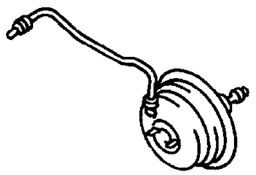	**005-400** Brake Master Cylinder 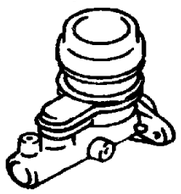
005-500 Brake Lines and Hoses 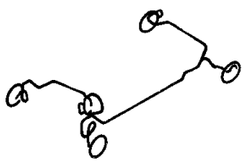	**005-600** Brake Pedals 		

Group - 5 Service Brakes

Illustration Title — Group-Fig. No.

Front Brakes
Brakes,Front ..... Fig. 5 - 110

Rear Brakes
Brakes,Rear,9 Inches x 2.5 Inches [BKE] ..... Fig. 5 - 210
Brakes,Rear,11 Inches x 2.25 Inches [BKA] ..... Fig. 5 - 220

Power Brake Booster
Booster,Power Brake ..... Fig. 5 - 310

Brake Master Cylinder
Master Cylinder,Brake ..... Fig. 5 - 410

Brake Lines and Hoses
Lines,Brake,From EHCU or RWAL II to Frame-AN 1,AN 5 ..... Fig. 5 - 510
Lines and Hoses,Front-AN 1 ..... Fig. 5 - 520
Lines and Hoses,Front-AN 5 ..... Fig. 5 - 530
Lines and Hoses,Rear and Chassis ..... Fig. 5 - 540

Brake Pedals
Pedals,Brake and Clutch ..... Fig. 5 - 610

Brakes,Front
Figure 5-110

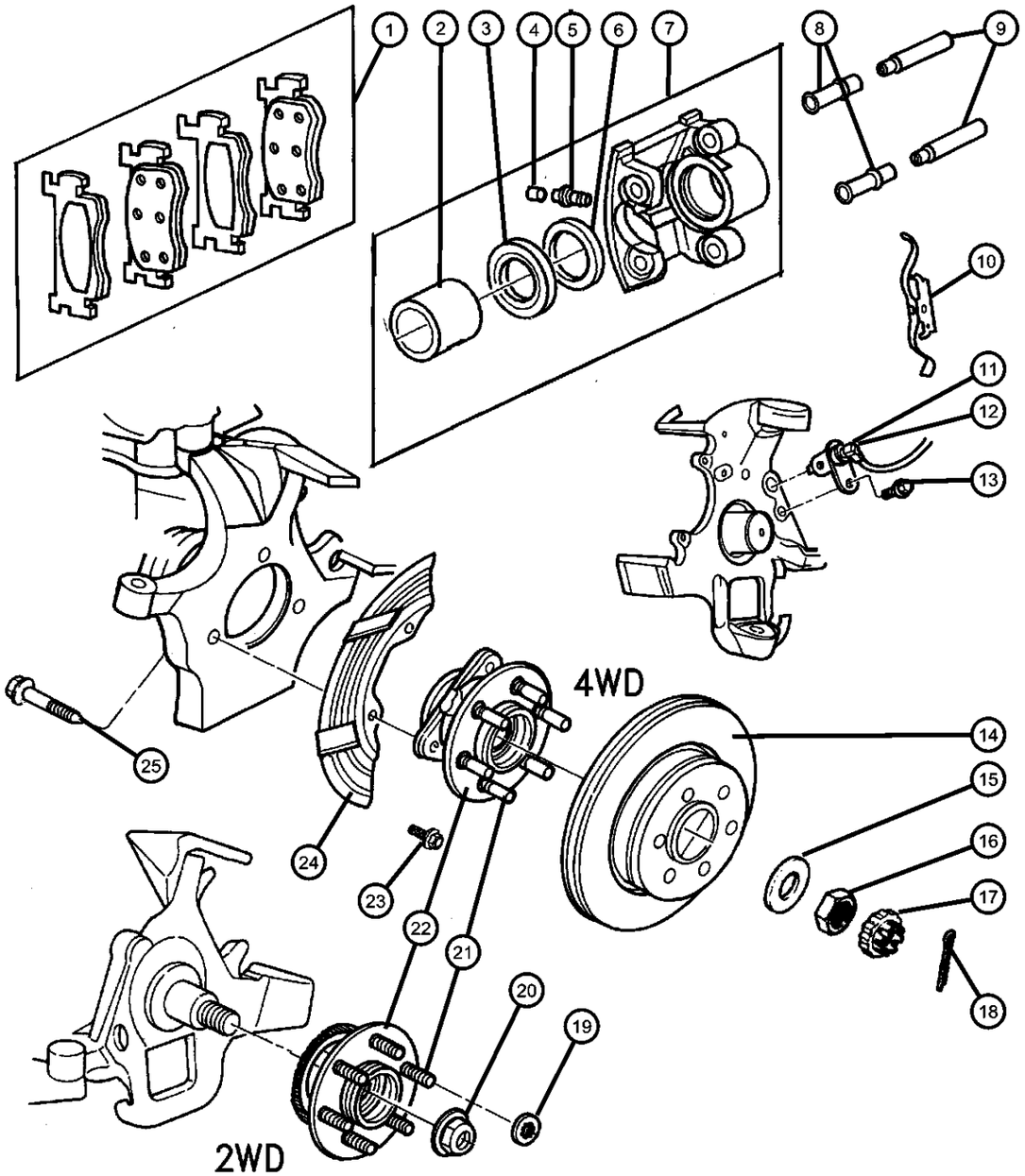

ITEM	PART NUMBER	QTY	LINE	SERIES	BODY	ENGINE	TRANS	TRIM	DESCRIPTION
Note:Sales Codes; [BGJ]=Brakes - Power Disc/Drum Rear Anti-Lock [BGK]=Brakes - 4 Wheel Anti-Lock									
1	05016167AB	1							PAD KIT, Front Disc Brake
	VDN13167								Make It New Brake Kits
	VOE13167								Make It Original Brake Kit
	V1013167								Mopar V-Line Alternative Part
	BHKH5568								Mopar V-Line Alternative Part Disc Hardware
	BHKH5025								Mopar V-Line Alternative Part Caliper Bolts
	VK616869AA								Mopar Loaded Brake Caliper Kit (2 Calipers, Brake Friction)
	V3010820								Mopar V-Line Alternative Part Ceramic
	VCDN0820AA								Make It Ceramic Brake Kit
2	05003794AA	1							PISTON, Brake
3	05003795AA	1							BOOT, Brake Piston
4	04126733	1							CAP, Bleeder
5	04126879	1							BLEEDER SCREW, Brake
6	05003796AA	1							SEAL, Caliper Piston
7									CALIPER, Disc Brake
	05016168AA	1							Right
	VK616869AA								Mopar Loaded Brake Caliper Kit (2 Calipers, Brake Friction)
	05016169AA	1							Left
	VK616869AA								Mopar Loaded Brake Caliper Kit (2 Calipers, Brake Friction)
8	04886074AA	1							BUSHING, Caliper
9	04886075AA	2							PIN, Caliper
10	52010170AB	2							CLIP, Brake Caliper, Caliper Retention Spring
11									SENSOR, Anti-Lock Brake
	56028582AA	1	1						Right
	56028583AA	1	1						Left
12									SENSOR KIT, Anti-Lock Brakes
	05016338AA	1	5						Right

DAKOTA (AN)

SERIES	LINE	BODY	ENGINE	TRANSMISSION
L = Dakota (All)	1 = Dakota 2WD	61 = Regular Cab (112 WB)	EPE = 2.5L 4 Cylinder	DGK = 4 Speed Automatic 42RE
	5 = Dakota 4WD	31 = Club Cab (131 WB)	EHC = 3.9L 6 Cylinder	DGT = 4 Speed Automatic 46RE
		84 = Quad Cab (131 WB)	EML = 5.0L 8 Cylinder	DDC = 5 Speed HD Manual
			EVA = 4.7L Magnum V8	DDK = 5 Speed HD Manual
			EP0 = All 2.5L	DG4 = Multispeed Automatic 45RFE
			EH0 = All 3.9L	DG0 = All Automatic Transmissions
			EM0 = All 5.9L	DBB = All Manual Transmissions
			EV0 = All 4.7L	

Brakes,Front
Figure 5-110

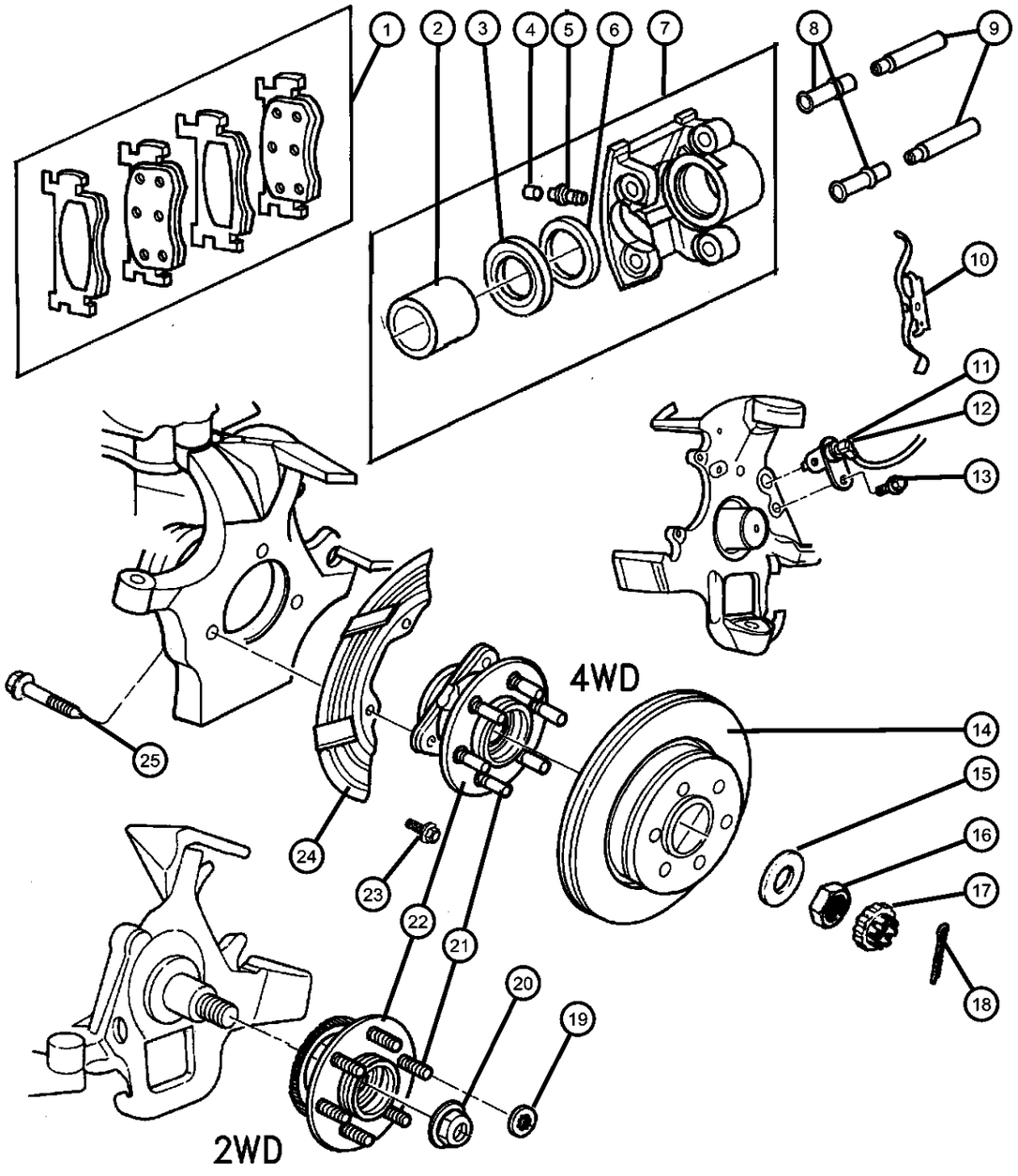

ITEM	PART NUMBER	QTY	LINE	SERIES	BODY	ENGINE	TRANS	TRIM	DESCRIPTION
	05016339AA	1	5						Left
13	00180077	4							BOLT, Hex Head, 5/16x18x3/4, Anti-Lock Brake Sensor, Mounting
14	52009208	2							ROTOR, Brake
15	06502293	2	5						WASHER, Flat, M23x43x4
16	06502294	2	5						NUT, Hex Flange, M22x1.25
17	04293167	2	5						NUT AND WASHER PACKAGE, Front Hub
18	06500336	2	5						PIN, Cotter, M5x36.00
19									NUT, Push
	06031635	4	1						Front Brake Rotor Retainer
		4	5						
20	06504007	2	1						NUT, Axle Hub
21									STUD, Hub
	04897915AA	6	5						Right or Left
		6	1						[BGJ] Up To and Including 04-08-02, Right or Left
		6	1						[BGK] Up To and Including 04-08-02, Right or Left
	05093849AA	6	1						[BGK] 04-09-02 and After, Right or Left
		6	1						[BGJ] 04-09-02 and After, Right or Left
22									HUB AND BEARING, Brake
	52009406AD	2	1						[BGK] Up To and Including 04-08-02, Right or Left
	52009406AE	2	1						[BGK] 04-09-02 and After, Right or Left
	52009528AD	2	1						[BGJ] Up To and Including 04-08-02, Right or Left
	52009528AE	2	1						[BGJ] 04-09-02 and After, Right or Left
	52068964AE	1	5						[BGK], Right
	52068965AE	1	5						[BGK], Left
	52069361AB	2	5						[BGJ], Right or Left
23									SCREW, Hex Flange Head, M8x1.25x23
	06502905	6	1						Splash Shield to Knuckle, Mounting

DAKOTA (AN)

SERIES	LINE	BODY	ENGINE	TRANSMISSION
L = Dakota (All)	1 = Dakota 2WD	61 = Regular Cab (112 WB)	EPE = 2.5L 4 Cylinder	DGK = 4 Speed Automatic 42RE
	5 = Dakota 4WD	31 = Club Cab (131 WB)	EHC = 3.9L 6 Cylinder	DGT = 4 Speed Automatic 46RE
		84 = Quad Cab (131 WB)	EML = 5.0L 8 Cylinder	DDC = 5 Speed HD Manual
			EVA = 4.7L Magnum V8	DDK = 5 Speed HD Manual
			EP0 = All 2.5L	DG4 = Multispeed Automatic 45RFE
			EH0 = All 3.9L	DG0 = All Automatic Transmissions
			EM0 = All 5.9L	DBB = All Manual Transmissions
			EV0 = All 4.7L	

Brakes,Front
Figure 5-110

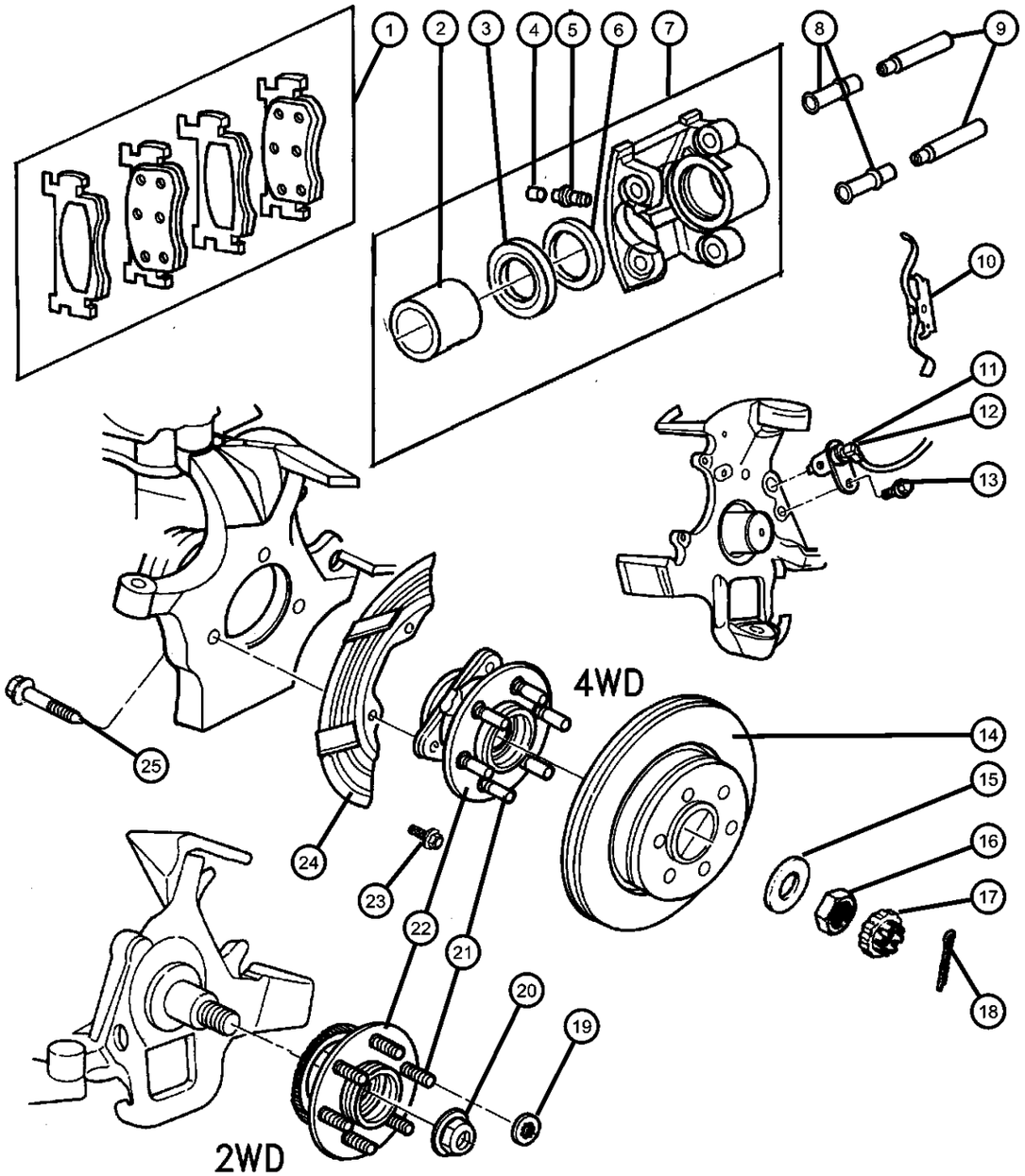

ITEM	PART NUMBER	QTY	LINE	SERIES	BODY	ENGINE	TRANS	TRIM	DESCRIPTION
		4	5						Splash Shield to Knuckle, Mounting
24									SHIELD, Splash
	52008456AB	1	1						Right
	52008457AB	1	1						Left
	52008990	1	5						Right
	52008991	1	5						Left
25	06505828AA	6	5						BOLT, Hub, Knuckle to Hub, Mounting

DAKOTA (AN)

SERIES	LINE	BODY	ENGINE	TRANSMISSION
L = Dakota (All)	1 = Dakota 2WD	61 = Regular Cab (112 WB)	EPE = 2.5L 4 Cylinder	DGK = 4 Speed Automatic 42RE
	5 = Dakota 4WD	31 = Club Cab (131 WB)	EHC = 3.9L 6 Cylinder	DGT = 4 Speed Automatic 46RE
		84 = Quad Cab (131 WB)	EML = 5.0L 8 Cylinder	DDC = 5 Speed HD Manual
			EVA = 4.7L Magnum V8	DDK = 5 Speed HD Manual
			EP0 = All 2.5L	DG4 = Multispeed Automatic 45RFE
			EH0 = All 3.9L	DG0 = All Automatic Transmissions
			EM0 = All 5.9L	DBB = All Manual Transmissions
			EV0 = All 4.7L	

Brakes,Rear,9 Inches x 2.5 Inches [BKE]
Figure 5-210

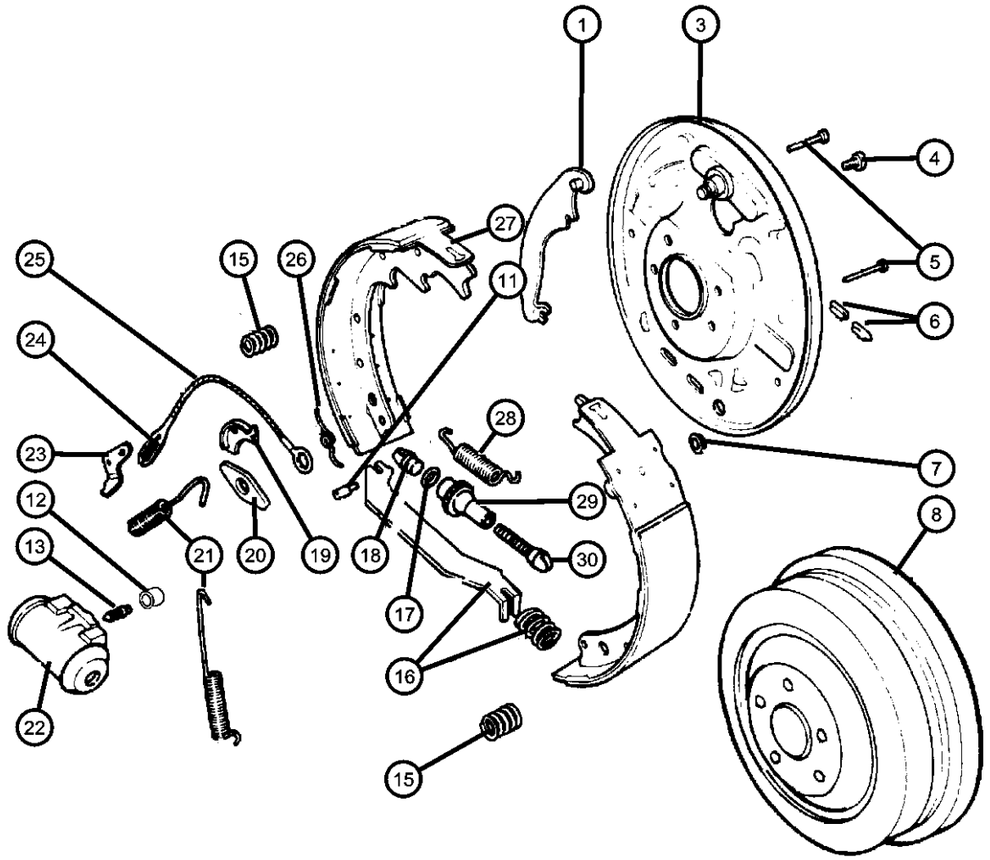

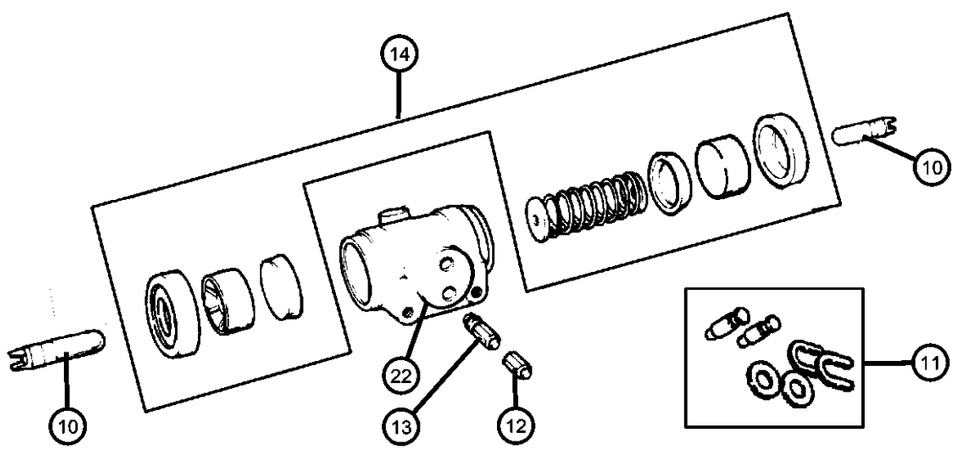

ITEM	PART NUMBER	QTY	LINE	SERIES	BODY	ENGINE	TRANS	TRIM	DESCRIPTION
Note:Sales Codes;									
[BKE]=Brakes - 9 X 2.5 Heavy Duty Rear Drum									
1									LEVER, Park Brake
	04882774	1	1						Right
		1	5						Right
	04882775	1	1						Left
		1	5						Left
-2									SPRING, Parking Brake Lever
	04882776	1	1						Return
		1	5						Return
3									PLATE, Brake Backing
	05252720	1	1						Right
		1	5						Right
	05252721	1	1						Left
		1	5						Left
4									BOLT, Hex Head
	06028921	2	1						Wheel Cylinder, Mounting
		2	5						Wheel Cylinder, Mounting
5									PIN, Brake Shoe Hold Down
	02260548	1	1						
		1	5						
6									PLUG, Brake Adjusting Hole
	04238721	2	1						
		2	5						
7									NUT, Hex Flange Lock
	00152345	8	1						
		8	5						
8									DRUM, Brake
	52006290	2	1						
		2	5						
-9									NUT, Push
	06031635	4	1						
		4	5						

DAKOTA (AN)

SERIES	LINE	BODY	ENGINE	TRANSMISSION
L = Dakota (All)	1 = Dakota 2WD	61 = Regular Cab (112 WB)	EPE = 2.5L 4 Cylinder	DGK = 4 Speed Automatic 42RE
	5 = Dakota 4WD	31 = Club Cab (131 WB)	EHC = 3.9L 6 Cylinder	DGT = 4 Speed Automatic 46RE
		84 = Quad Cab (131 WB)	EML = 5.0L 8 Cylinder	DDC = 5 Speed HD Manual
			EVA = 4.7L Magnum V8	DDK = 5 Speed HD Manual
			EP0 = All 2.5L	DG4 = Multispeed Automatic 45RFE
			EH0 = All 3.9L	DG0 = All Automatic Transmissions
			EM0 = All 5.9L	DBB = All Manual Transmissions
			EV0 = All 4.7L	

AR = use ase required - = Non illustrrated part

Brakes,Rear,9 Inches x 2.5 Inches [BKE]
Figure 5-210

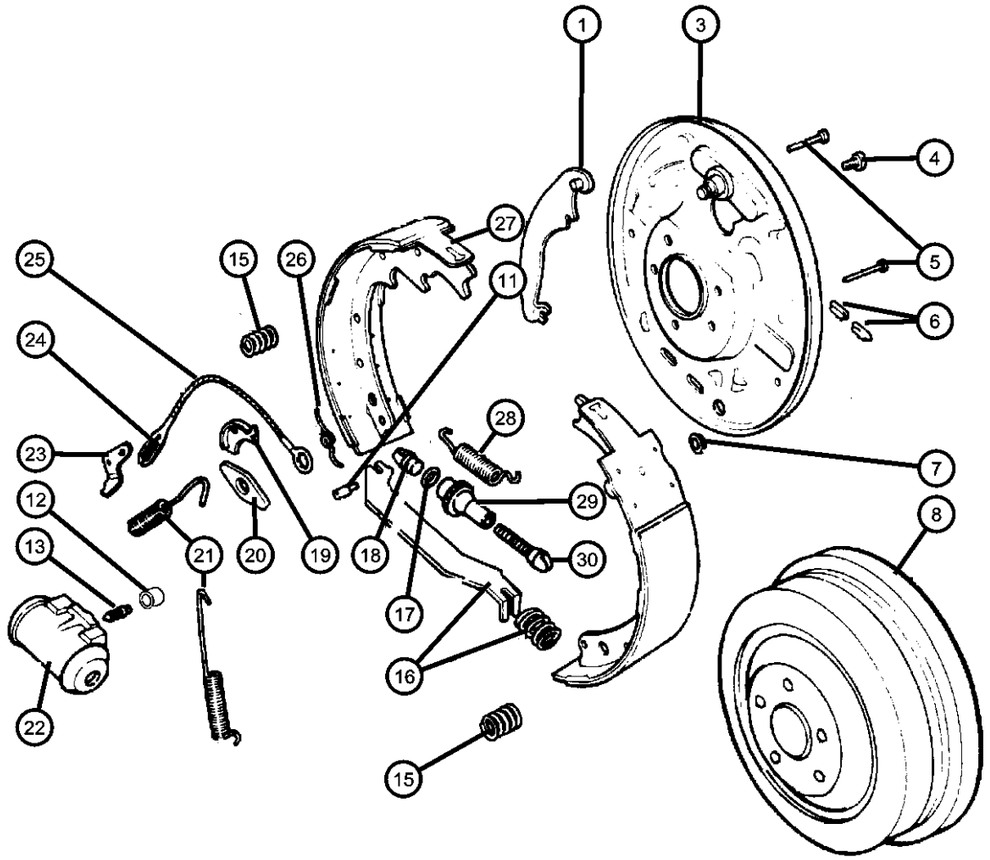

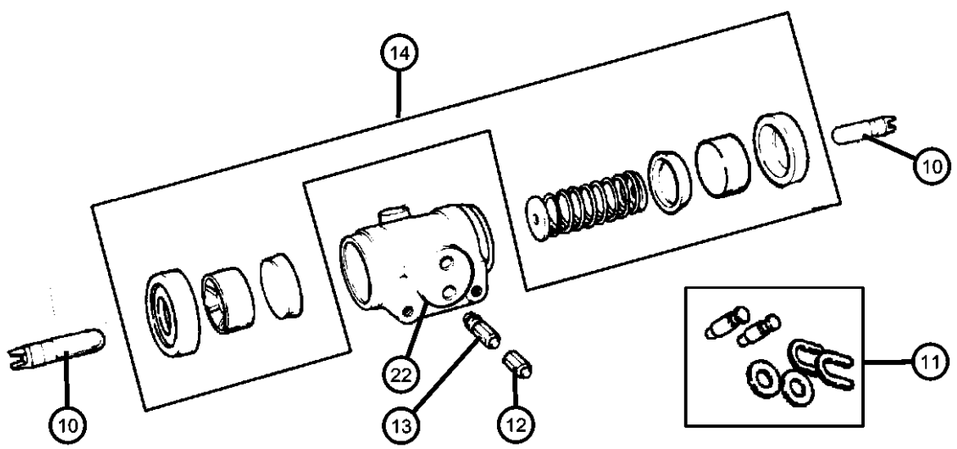

ITEM	PART NUMBER	QTY	LINE	SERIES	BODY	ENGINE	TRANS	TRIM	DESCRIPTION
10									ROD, Brake Cylinder Piston
	02260787	2	1						
		2	5						
11									HARDWARE PACKAGE, Rear Brake
	04049681	1	1						
		1	5						
12									CAP, Bleeder
	04238717	1	1						
		1	5						
13									SCREW, Bleeder
	03766674	1	1						
		1	5						
14									REPAIR KIT, Wheel Cylinder
	05252631	1	1						
		1	5						
15									SPRING, Brake Shoe Hold Down
	04313062	1	1						
		1	5						
16									STRUT, Parking Brake
	04713590	1	1						
		1	5						
17									WASHER, Adjuster Button
	06027559	1	1						
		1	5						
18									BUTTON, Rear Brake Auto Adjust
	02944586	1	1						
		1	5						
19									GUIDE, Brake Adjusting Cable
	02260793	1	1						
		1	5						
20									PLATE, Brake Shoe Guide
	04313075	1	1						

DAKOTA (AN)

SERIES	LINE	BODY	ENGINE	TRANSMISSION
L = Dakota (All)	1 = Dakota 2WD	61 = Regular Cab (112 WB)	EPE = 2.5L 4 Cylinder	DGK = 4 Speed Automatic 42RE
	5 = Dakota 4WD	31 = Club Cab (131 WB)	EHC = 3.9L 6 Cylinder	DGT = 4 Speed Automatic 46RE
		84 = Quad Cab (131 WB)	EML = 5.0L 8 Cylinder	DDC = 5 Speed HD Manual
			EVA = 4.7L Magnum V8	DDK = 5 Speed HD Manual
			EP0 = All 2.5L	DG4 = Multispeed Automatic 45RFE
			EH0 = All 3.9L	DG0 = All Automatic Transmissions
			EM0 = All 5.9L	DBB = All Manual Transmissions
			EV0 = All 4.7L	

Brakes,Rear,9 Inches x 2.5 Inches [BKE]
Figure 5-210

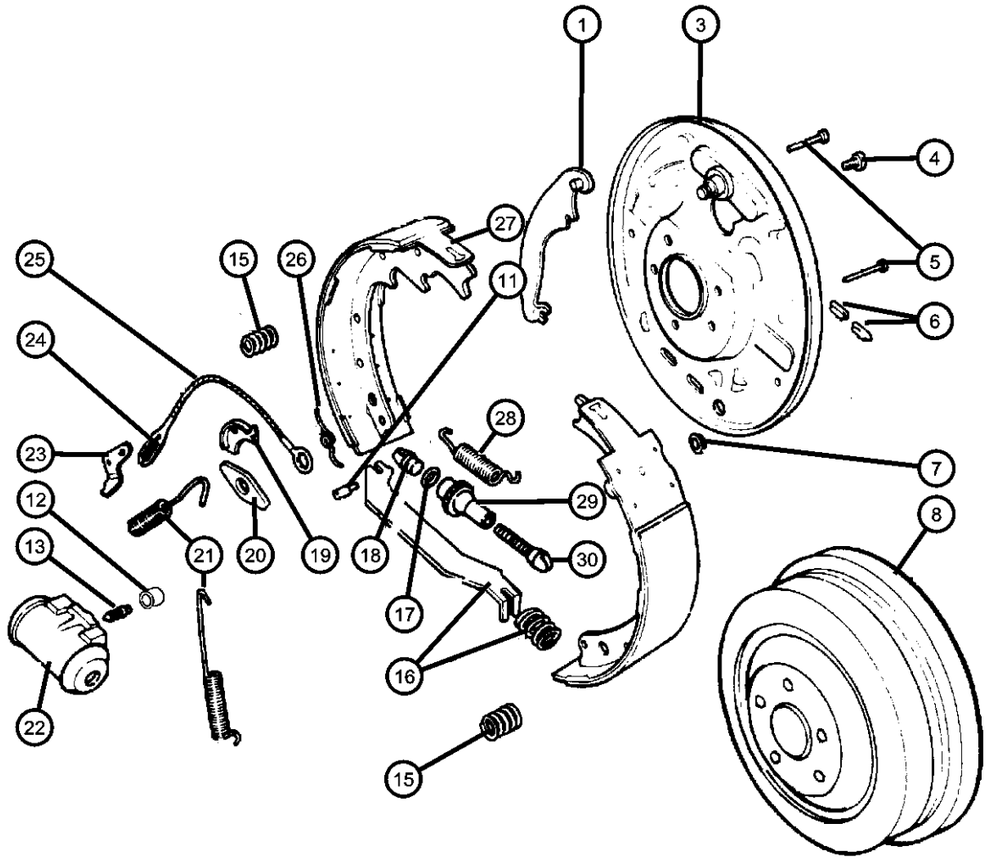

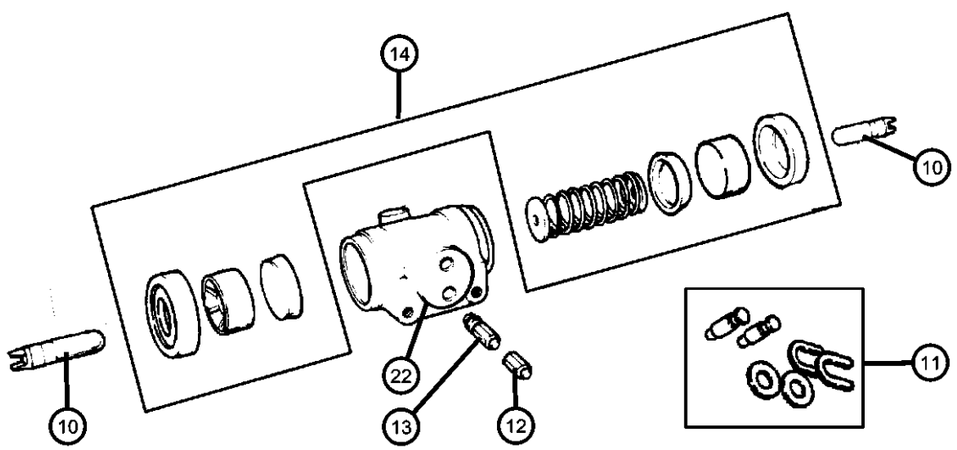

ITEM	PART NUMBER	QTY	LINE	SERIES	BODY	ENGINE	TRANS	TRIM	DESCRIPTION
		1	5						
21									SPRING, Brake Shoe Return
	02881676	2	1						
		2	5						
22									CYLINDER, Wheel
	04313056	1	1						Complete Assembly
	V2103056AA								Mopar V-Line Alternative Part Wheel Cylinder
		1	5						Complete Assembly
	V2103056AA								Mopar V-Line Alternative Part Wheel Cylinder
23									LEVER, Park Brake Adjusting
	04761759	1	1						
		1	5						
24									SPRING, Adjuster Cable
	03461660	1	1						
		1	5						
25									CABLE, Brake Automatic Adjuster
	03461662	1	1						
		1	5						
26									SPRING, Brake Auto Adjuster Lever
	02944580	1	1						Right
		1	5						Right
	02944581	1	1						Left
		1	5						Left
27									SHOE AND LINING KIT, Drum
	04723367	1	1						Comes with item 11
	BHKH7265								Mopar V-Line Alternative Part All In One Drum Combi Kits
	BHKH2526								Mopar V-Line Alternative Part Drum Self Adjuster Kit Left
	BHKH2527								Mopar V-Line Alternative Part Drum Self Adjuster Kit
	V2010367AB								Mopar V-Line Alternative Part

DAKOTA (AN)

SERIES	LINE	BODY	ENGINE	TRANSMISSION
L = Dakota (All)	1 = Dakota 2WD	61 = Regular Cab (112 WB)	EPE = 2.5L 4 Cylinder	DGK = 4 Speed Automatic 42RE
	5 = Dakota 4WD	31 = Club Cab (131 WB)	EHC = 3.9L 6 Cylinder	DGT = 4 Speed Automatic 46RE
		84 = Quad Cab (131 WB)	EML = 5.0L 8 Cylinder	DDC = 5 Speed HD Manual
			EVA = 4.7L Magnum V8	DDK = 5 Speed HD Manual
			EP0 = All 2.5L	DG4 = Multispeed Automatic 45RFE
			EH0 = All 3.9L	DG0 = All Automatic Transmissions
			EM0 = All 5.9L	DBB = All Manual Transmissions
			EV0 = All 4.7L	

AR = use ase required - = Non illustrrated part

Brakes,Rear,9 Inches x 2.5 Inches [BKE]
Figure 5-210

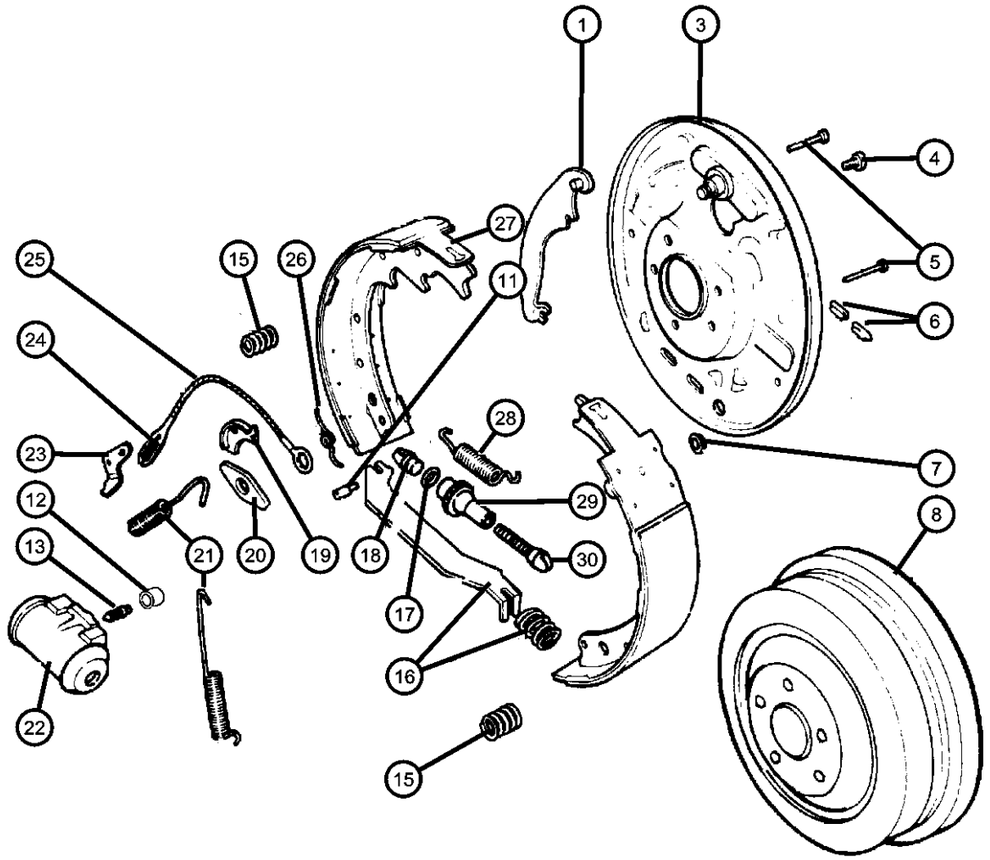

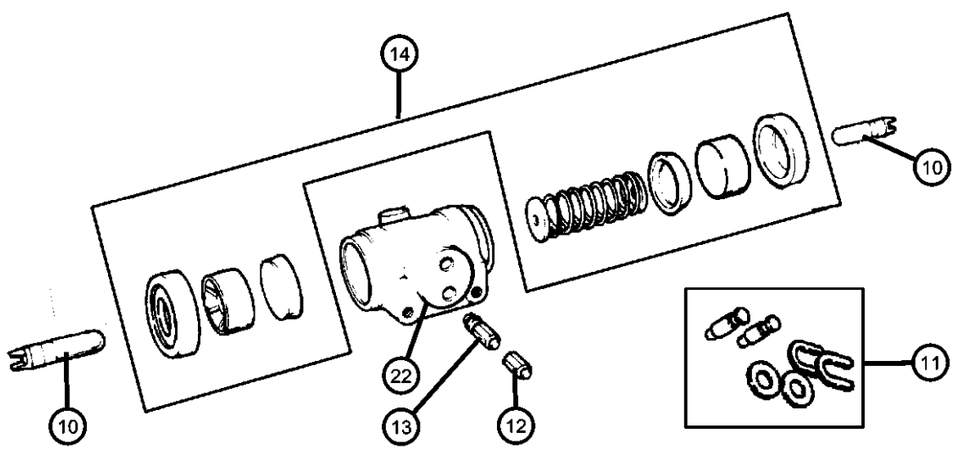

ITEM	PART NUMBER	QTY	LINE	SERIES	BODY	ENGINE	TRANS	TRIM	DESCRIPTION
		1	5						Comes with item 11
	BHKH7265								Mopar V-Line Alternative Part All In One Drum Combi Kits
	BHKH2526								Mopar V-Line Alternative Part Drum Self Adjuster Kit Left
	BHKH2527								Mopar V-Line Alternative Part Drum Self Adjuster Kit
	V2010367AB								Mopar V-Line Alternative Part
28									SPRING, Brake Shoe to Shoe
	04423085	1	1						
		1	5						
29									NUT, Rear Brake Auto Adjust Pivot
	02944692	1	1						Right
		1	5						Right
	02944693	1	1						Left
		1	5						Left
30									SCREW, Brake Adjusting
	04423898	1	1						Right
		1	5						Right
	04423899	1	1						Left
		1	5						Left

DAKOTA (AN)

SERIES	LINE	BODY	ENGINE	TRANSMISSION
L = Dakota (All)	1 = Dakota 2WD	61 = Regular Cab (112 WB)	EPE = 2.5L 4 Cylinder	DGK = 4 Speed Automatic 42RE
	5 = Dakota 4WD	31 = Club Cab (131 WB)	EHC = 3.9L 6 Cylinder	DGT = 4 Speed Automatic 46RE
		84 = Quad Cab (131 WB)	EML = 5.0L 8 Cylinder	DDC = 5 Speed HD Manual
			EVA = 4.7L Magnum V8	DDK = 5 Speed HD Manual
			EP0 = All 2.5L	DG4 = Multispeed Automatic 45RFE
			EH0 = All 3.9L	DG0 = All Automatic Transmissions
			EM0 = All 5.9L	DBB = All Manual Transmissions
			EV0 = All 4.7L	

Brakes,Rear,11 Inches x 2.25 Inches [BKA]
Figure 5-220

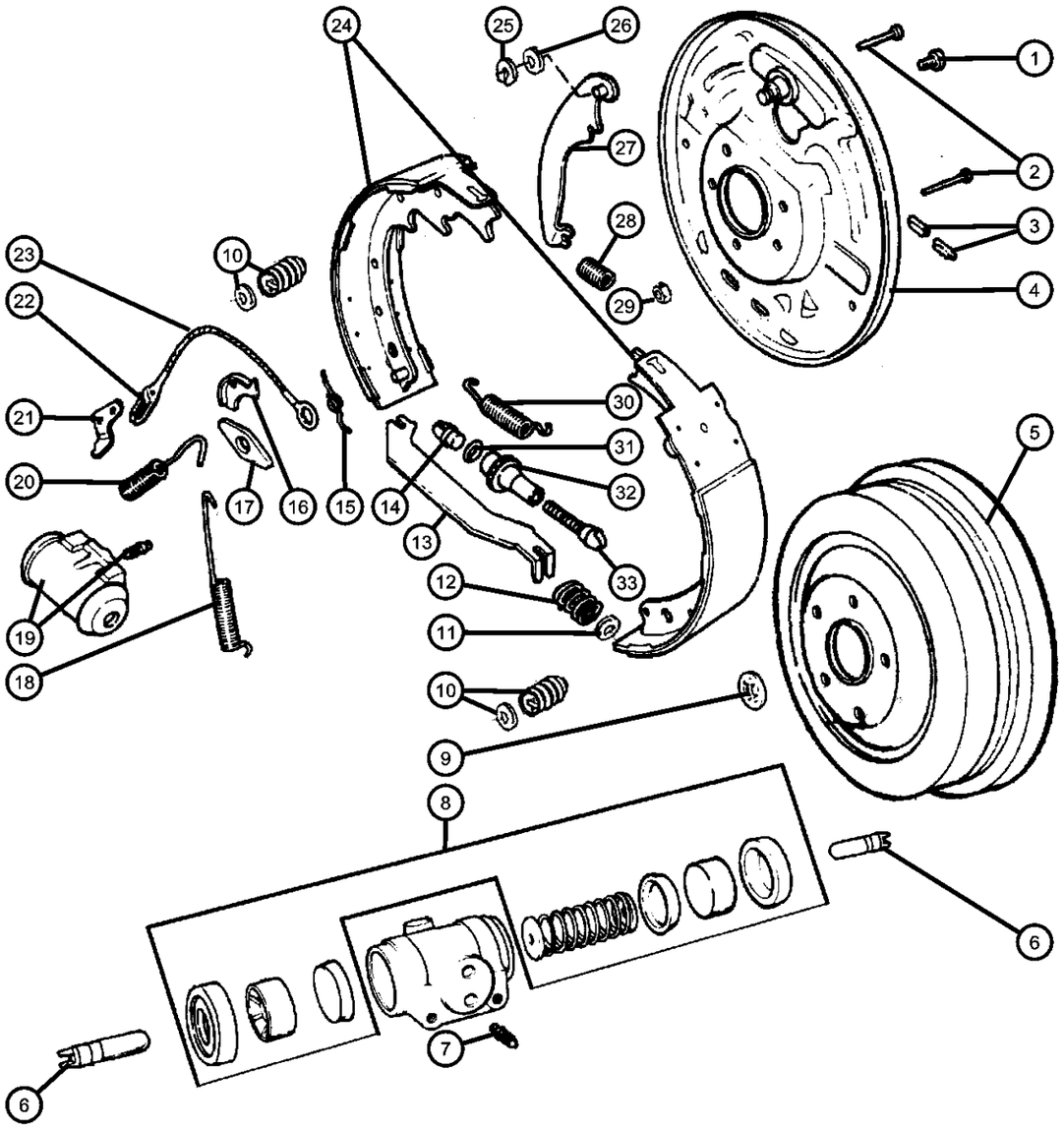

ITEM	PART NUMBER	QTY	LINE	SERIES	BODY	ENGINE	TRANS	TRIM	DESCRIPTION
Note:Sales Codes;									
[BKA]=Brakes - 11 x 2.25 Rear Drum									
1									BOLT, Hex Head
	06028921	2	5						Wheel Cylinder, Mounting
		2	1						Wheel Cylinder, Mounting
2									PIN, Brake Shoe Hold Down
	05014223AA	2	5						
		2	1						
3									PLUG, Brake Adjusting Hole
	32000147	2	5						
		2	1						
4									PLATE, Brake Backing
	05014128AA	1	1						Right
		1	5						Right
	05014129AA	1	1						Left
		1	5						Left
5									DRUM, Brake
	52009595AC	2	5						
		2	1						
6									ROD, Brake Cylinder Piston
	03492657	2	5						
		2	1						
7									SCREW, Bleeder
	J3203313	1	1						
		1	5						
8									REPAIR KIT, Wheel Cylinder
	05252631	1	1						
		1	5						
9									NUT, Push
	06031635	4	1						Brake Drum Retainer
		4	5						Brake Drum Retainer
10									SPRING, Brake Shoe Hold Down
	05014224AB	2	5						With plate

DAKOTA (AN)

SERIES	LINE	BODY	ENGINE	TRANSMISSION
L = Dakota (All)	1 = Dakota 2WD	61 = Regular Cab (112 WB)	EPE = 2.5L 4 Cylinder	DGK = 4 Speed Automatic 42RE
	5 = Dakota 4WD	31 = Club Cab (131 WB)	EHC = 3.9L 6 Cylinder	DGT = 4 Speed Automatic 46RE
		84 = Quad Cab (131 WB)	EML = 5.0L 8 Cylinder	DDC = 5 Speed HD Manual
			EVA = 4.7L Magnum V8	DDK = 5 Speed HD Manual
			EP0 = All 2.5L	DG4 = Multispeed Automatic 45RFE
			EH0 = All 3.9L	DG0 = All Automatic Transmissions
			EM0 = All 5.9L	DBB = All Manual Transmissions
			EV0 = All 4.7L	

Brakes,Rear,11 Inches x 2.25 Inches [BKA]
Figure 5-220

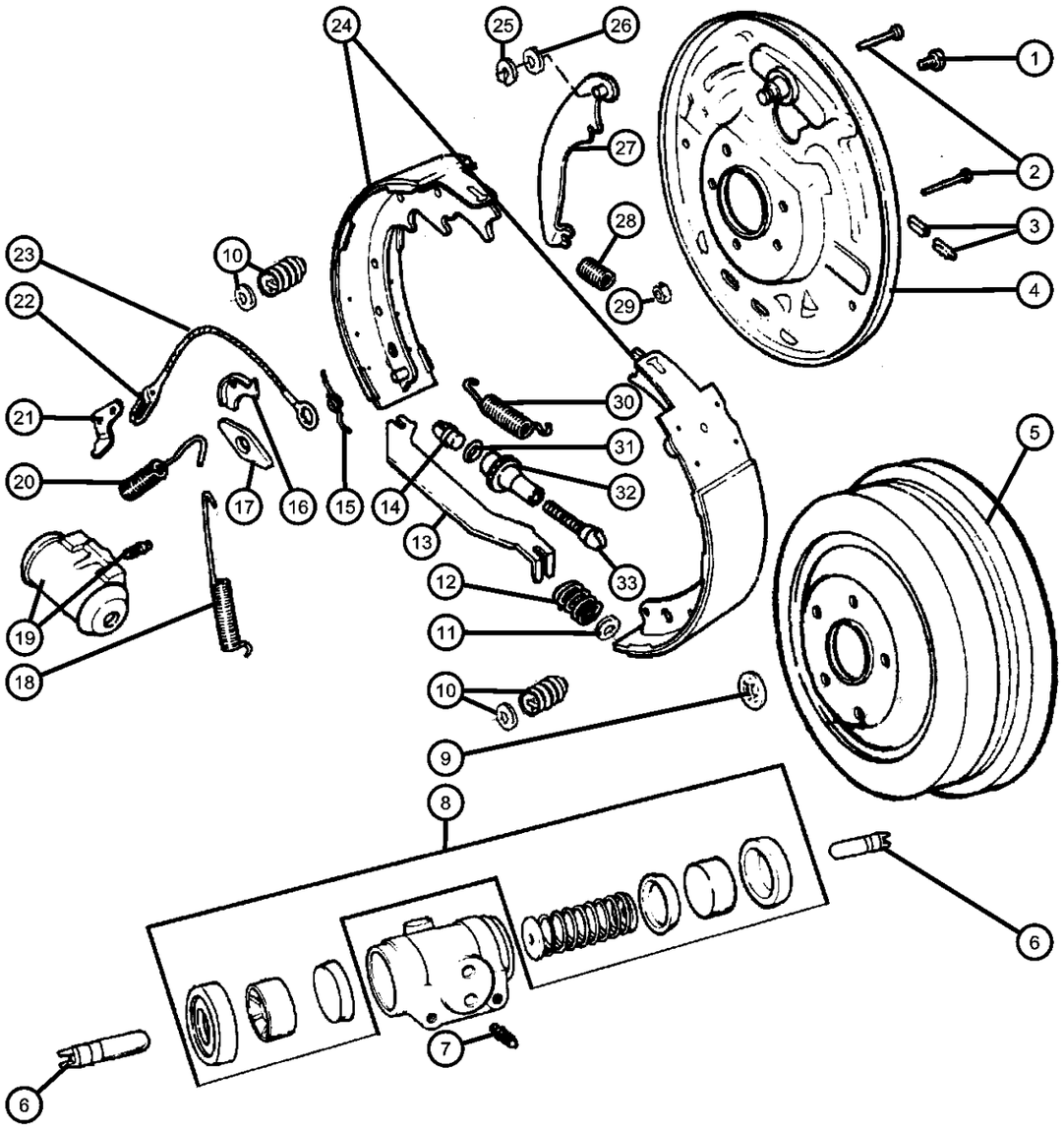

ITEM	PART NUMBER	QTY	LINE	SERIES	BODY	ENGINE	TRANS	TRIM	DESCRIPTION
		2	1						With plate
11									CLIP, Park Brake Strut
	04773762	1	1						
		1	5						
12									SPRING, Parking Brake Strut
	04773942	1	1						
		1	5						
13									STRUT, Parking Brake
	05003791AA	1	1						
		1	5						
14									SOCKET, Brake Adjusting
	04746586	1	1						
		1	5						
15									SPRING, Auto Adjusting
	04746582	1	1						Lever, Right
		1	5						Lever, Right
	04746583	1	1						Lever, Left
		1	5						Lever, Left
16									GUIDE, Brake Adjusting Cable
	J3201947	1	1						
		1	5						
17									PLATE, Brake Shoe Guide
	05003786AA	1	1						
		1	5						
18									SPRING, Brake Shoe Return
	05003781AA	1	1						Primary
		1	5						Primary
19									CYLINDER, Wheel
	04088898	1	5						Complete Assembly, Right
	V2108898AA								Mopar V-Line Alternative Part Wheel Cylinder
		1	1						Complete Assembly, Right

DAKOTA (AN)

SERIES	LINE	BODY	ENGINE	TRANSMISSION
L = Dakota (All)	1 = Dakota 2WD	61 = Regular Cab (112 WB)	EPE = 2.5L 4 Cylinder	DGK = 4 Speed Automatic 42RE
	5 = Dakota 4WD	31 = Club Cab (131 WB)	EHC = 3.9L 6 Cylinder	DGT = 4 Speed Automatic 46RE
		84 = Quad Cab (131 WB)	EML = 5.0L 8 Cylinder	DDC = 5 Speed HD Manual
			EVA = 4.7L Magnum V8	DDK = 5 Speed HD Manual
			EP0 = All 2.5L	DG4 = Multispeed Automatic 45RFE
			EH0 = All 3.9L	DG0 = All Automatic Transmissions
			EM0 = All 5.9L	DBB = All Manual Transmissions
			EV0 = All 4.7L	

Brakes,Rear,11 Inches x 2.25 Inches [BKA]
Figure 5-220

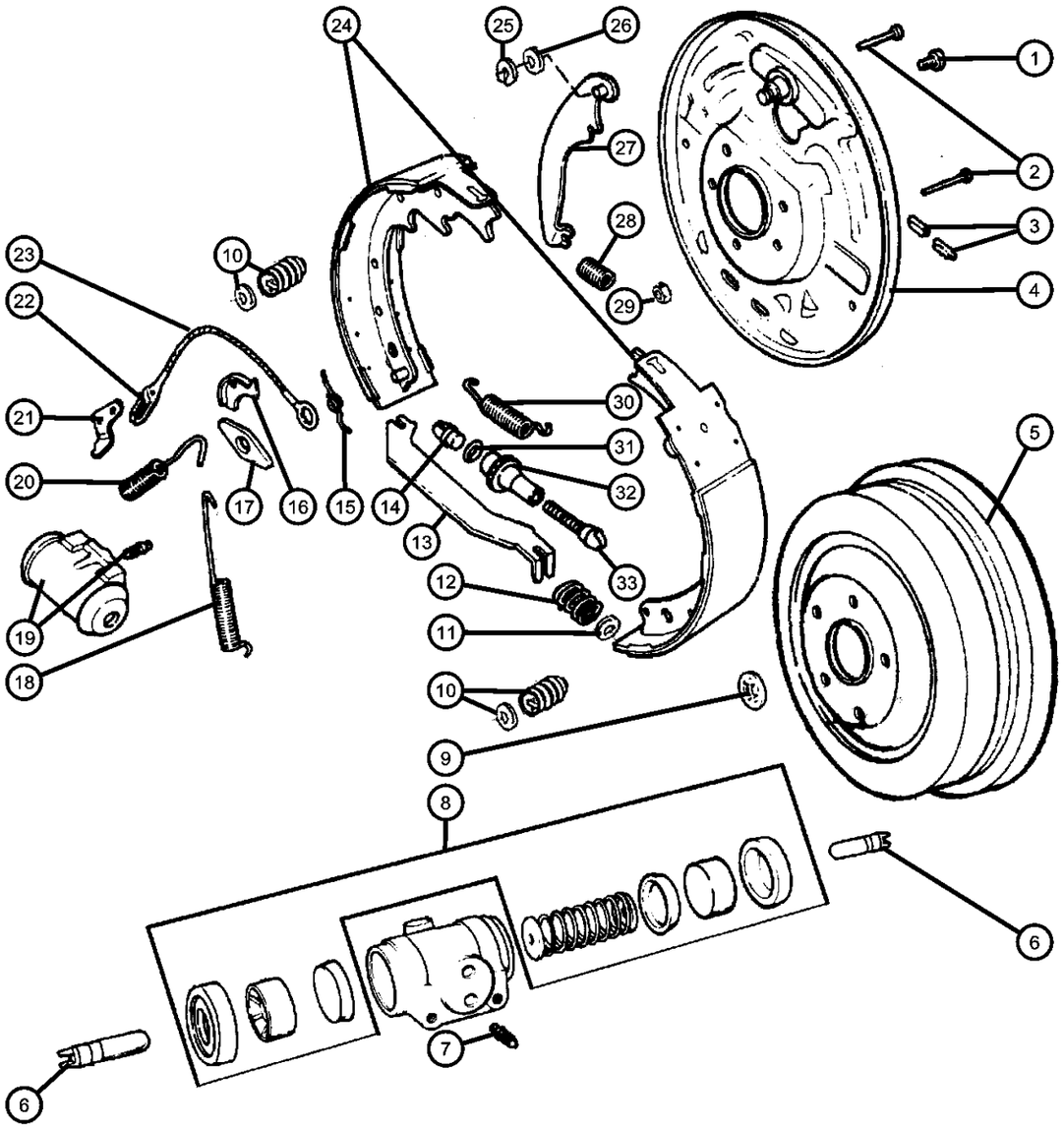

ITEM	PART NUMBER	QTY	LINE	SERIES	BODY	ENGINE	TRANS	TRIM	DESCRIPTION
	V2108898AA								Mopar V-Line Alternative Part Wheel Cylinder
	04088899	1	5						Complete Assembly, Left
	V2108899AA								Mopar V-Line Alternative Part Wheel Cylinder
		1	1						Complete Assembly, Left
	V2108899AA								Mopar V-Line Alternative Part Wheel Cylinder
20									SPRING, Brake Shoe Return
	02953992	1	1						Secondary
		1	5						Secondary
21									LEVER, Rear Wheel Brake Adjust
	05003788AA	1	1						Right
		1	5						Right
	05003789AA	1	1						Left
		1	5						Left
22									SPRING, Adjuster Cable
	03461660	1	5						
		1	1						
23									CABLE, Brake Automatic Adjuster
	03461664	1	5						
		1	1						
24									SHOE AND LINING KIT, Drum
	05014126AA	1	1						
	BHKH7298								Mopar V-Line Alternative Part All In One Drum Combi Kits
	BHKH2666								Mopar V-Line Alternative Part Drum Self Adjuster Kit Left
	BHKH2667								Mopar V-Line Alternative Part Drum Self Adjuster Kit
	V2013126AB								Mopar V-Line Alternative Part
		1	5						
	BHKH7298								Mopar V-Line Alternative Part All In One Drum Combi Kits
	BHKH2666								Mopar V-Line Alternative Part Drum Self Adjuster Kit Left

DAKOTA (AN)

SERIES	LINE	BODY	ENGINE	TRANSMISSION
L = Dakota (All)	1 = Dakota 2WD	61 = Regular Cab (112 WB)	EPE = 2.5L 4 Cylinder	DGK = 4 Speed Automatic 42RE
	5 = Dakota 4WD	31 = Club Cab (131 WB)	EHC = 3.9L 6 Cylinder	DGT = 4 Speed Automatic 46RE
		84 = Quad Cab (131 WB)	EML = 5.0L 8 Cylinder	DDC = 5 Speed HD Manual
			EVA = 4.7L Magnum V8	DDK = 5 Speed HD Manual
			EP0 = All 2.5L	DG4 = Multispeed Automatic 45RFE
			EH0 = All 3.9L	DG0 = All Automatic Transmissions
			EM0 = All 5.9L	DBB = All Manual Transmissions
			EV0 = All 4.7L	

Brakes,Rear,11 Inches x 2.25 Inches [BKA]
Figure 5-220

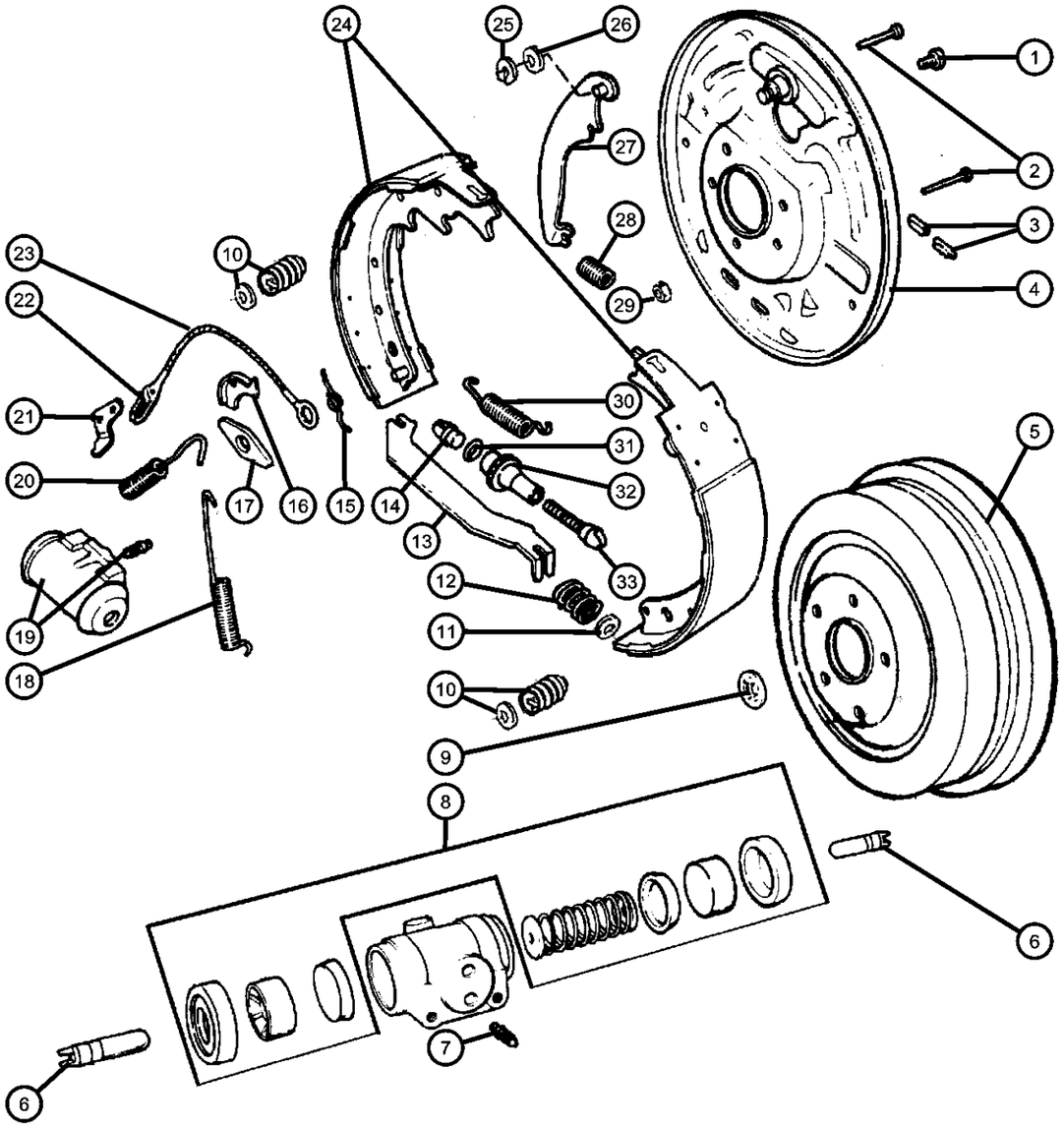

ITEM	PART NUMBER	QTY	LINE	SERIES	BODY	ENGINE	TRANS	TRIM	DESCRIPTION
	BHKH2667								Mopar V-Line Alternative Part Drum Self Adjuster Kit
	V2013126AB								Mopar V-Line Alternative Part
25									RETAINER, Parking Brake Lever
	J3108202	1	1						
		1	5						
26									WASHER, Parking Brake Lever
	83502900	1	1						Mounting
		1	5						Mounting
27									LEVER, Park Brake Adjusting
	05003784AA	1	1						Right
		1	5						Right
	05003785AA	1	1						Left
		1	5						Left
28									SPRING, Parking Brake Lever
	05003790AA	1	1						
		1	5						
29	06502698	8							NUT, Hex Flange Lock, Backing Plate to Axle Housing, Mounting
30									SPRING, Brake Shoe to Shoe
	05003787AA	1	1						
		1	5						
31									WASHER, Rear Brake Adjuster
	04746585	1	1						
		1	5						
32									NUT, Rear Brake Auto Adjust Pivot
	02944692	1	5						Right
		1	1						Right
	02944693	1	5						Left
		1	1						Left
33									SCREW, Brake Adjusting
	02881686	1	5						Right
		1	1						Right

DAKOTA (AN)

SERIES	LINE	BODY	ENGINE	TRANSMISSION
L = Dakota (All)	1 = Dakota 2WD 5 = Dakota 4WD	61 = Regular Cab (112 WB) 31 = Club Cab (131 WB) 84 = Quad Cab (131 WB)	EPE = 2.5L 4 Cylinder EHC = 3.9L 6 Cylinder EML = 5.0L 8 Cylinder EVA = 4.7L Magnum V8 EP0 = All 2.5L EH0 = All 3.9L EM0 = All 5.9L EV0 = All 4.7L	DGK = 4 Speed Automatic 42RE DGT = 4 Speed Automatic 46RE DDC = 5 Speed HD Manual DDK = 5 Speed HD Manual DG4 = Multispeed Automatic 45RFE DG0 = All Automatic Transmissions DBB = All Manual Transmissions

Brakes,Rear,11 Inches x 2.25 Inches [BKA]
Figure 5-220

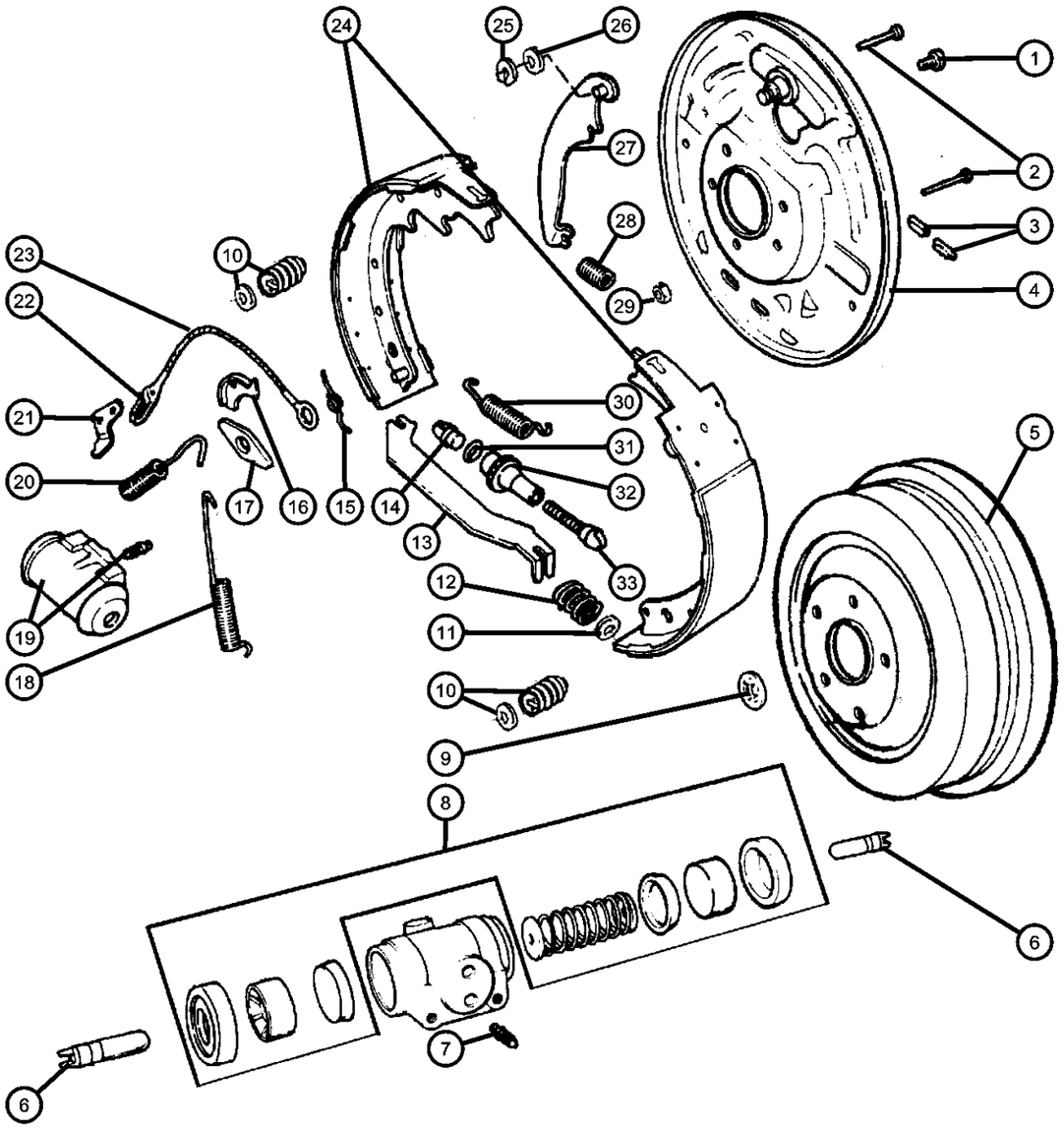

ITEM	PART NUMBER	QTY	LINE	SERIES	BODY	ENGINE	TRANS	TRIM	DESCRIPTION
	02881687	1	5						Left
		1	1						Left

DAKOTA (AN)

SERIES	LINE	BODY	ENGINE	TRANSMISSION
L = Dakota (All)	1 = Dakota 2WD	61 = Regular Cab (112 WB)	EPE = 2.5L 4 Cylinder	DGK = 4 Speed Automatic 42RE
	5 = Dakota 4WD	31 = Club Cab (131 WB)	EHC = 3.9L 6 Cylinder	DGT = 4 Speed Automatic 46RE
		84 = Quad Cab (131 WB)	EML = 5.0L 8 Cylinder	DDC = 5 Speed HD Manual
			EVA = 4.7L Magnum V8	DDK = 5 Speed HD Manual
			EP0 = All 2.5L	DG4 = Multispeed Automatic 45RFE
			EH0 = All 3.9L	DG0 = All Automatic Transmissions
			EM0 = All 5.9L	DBB = All Manual Transmissions
			EV0 = All 4.7L	

Booster,Power Brake
Figure 5-310

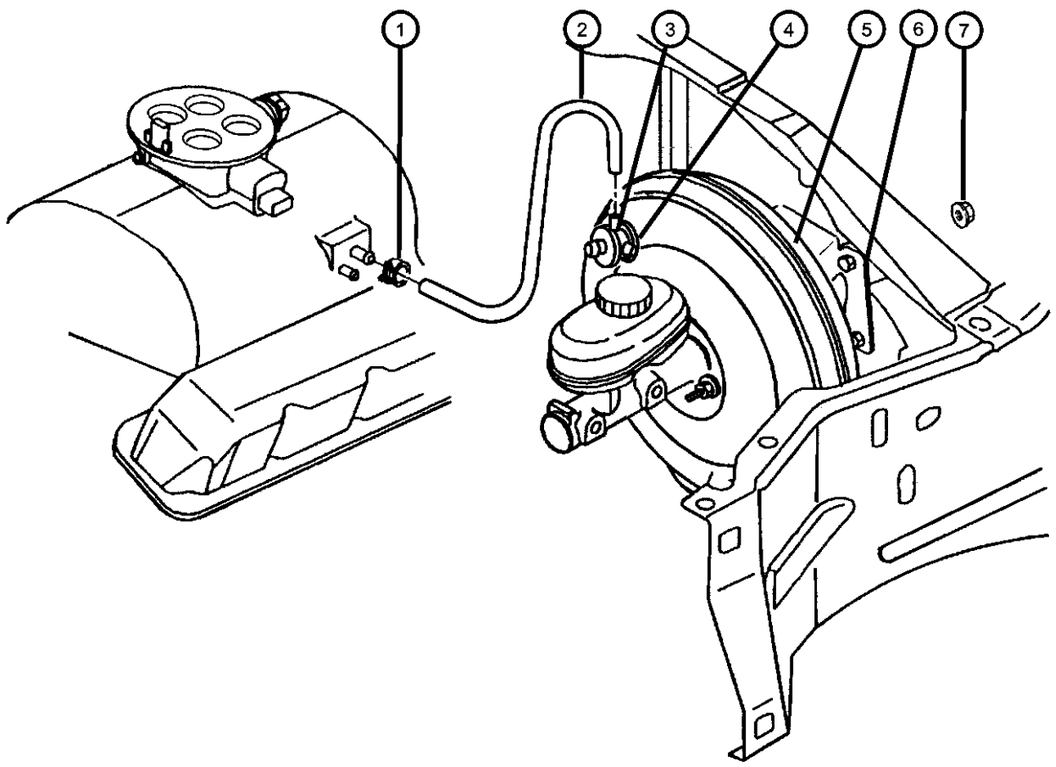

ITEM	PART NUMBER	QTY	LINE	SERIES	BODY	ENGINE	TRANS	TRIM	DESCRIPTION

Note:Sales Codes;
[EH0]=Engines - All 3.9L V-6 Gas
[EM0]=Engines - All 5.9L 8 Cylinder Gas
[EP0]=Engines - All 2.5L 4 Cylinder Gas
[EV0]=Engines - All 4.7L Gas
[TXV]=Tires-P265/70R16 OWL All TerainTIRES - P265/70R16 OWL ALL TERRAIN

1	02448761	1	CLAMP, Hose
2			HOSE, Brake Vacuum
	52009139AB	1	[EP0]
	52010382AC	1	[EH0,EM0,EV0]
3	05016730AA	1	VALVE, Brake Booster Check
4	04883813AA	1	GROMMET, Brake Booster Check Valve
5			BOOSTER, Power Brake
	05013132AB	1	without [TXV]
	05013133AB	1	with [TXV]
6	05019013AA	1	GASKET, Booster to Dash, Mounting
7	06503269	4	NUT, Hex, M10-1.5, Booster to Dash, Mounting

DAKOTA (AN)

SERIES	LINE	BODY	ENGINE	TRANSMISSION
L = Dakota (All)	1 = Dakota 2WD	61 = Regular Cab (112 WB)	EPE = 2.5L 4 Cylinder	DGK = 4 Speed Automatic 42RE
	5 = Dakota 4WD	31 = Club Cab (131 WB)	EHC = 3.9L 6 Cylinder	DGT = 4 Speed Automatic 46RE
		84 = Quad Cab (131 WB)	EML = 5.0L 8 Cylinder	DDC = 5 Speed HD Manual
			EVA = 4.7L Magnum V8	DDK = 5 Speed HD Manual
			EP0 = All 2.5L	DG4 = Multispeed Automatic 45RFE
			EH0 = All 3.9L	DG0 = All Automatic Transmissions
			EM0 = All 5.9L	DBB = All Manual Transmissions
			EV0 = All 4.7L	

Master Cylinder,Brake
Figure 5-410

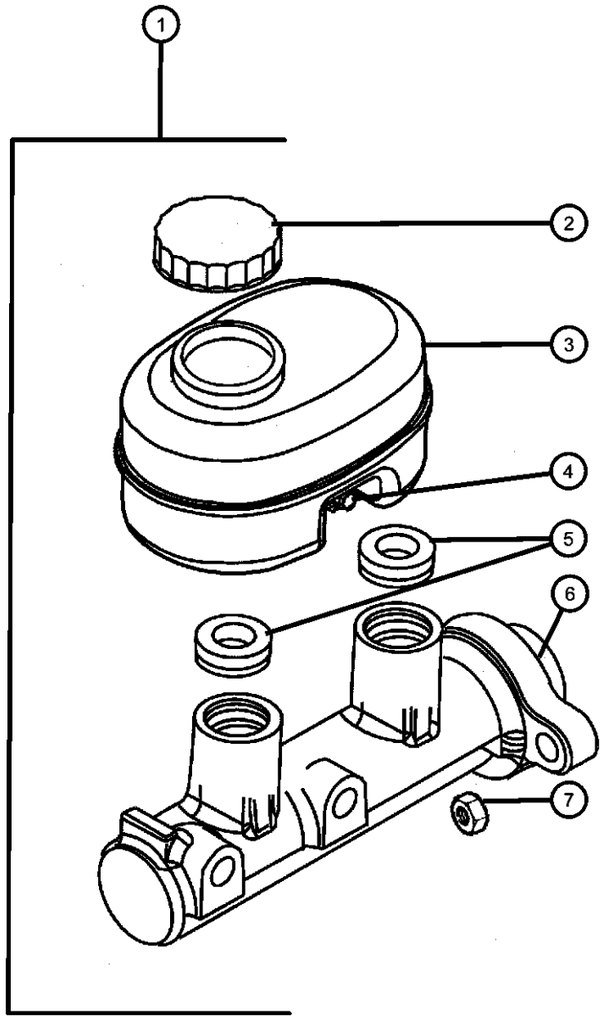

ITEM	PART NUMBER	QTY	LINE	SERIES	BODY	ENGINE	TRANS	TRIM	DESCRIPTION
1	05072994AA	1							MASTER CYLINDER, Brake
2	04683656	1							CAP, Master Cylinder Reservoir
3	05072995AA	1							RESERVOIR, Brake Master Cylinder
4	04723394	2							PIN, Master Cylinder ReservoirMounting
5	04723389	2							GROMMET, Master Cylinder ReservoirMounting
6	04723395	1							SEAL, Master Cylinder To BoosterMounting
7	06503269	2							NUT, Hex, M10-1.5, Master Cylinder to Booster, Mounting

DAKOTA (AN)

SERIES	LINE	BODY	ENGINE	TRANSMISSION
L = Dakota (All)	1 = Dakota 2WD	61 = Regular Cab (112 WB)	EPE = 2.5L 4 Cylinder	DGK = 4 Speed Automatic 42RE
	5 = Dakota 4WD	31 = Club Cab (131 WB)	EHC = 3.9L 6 Cylinder	DGT = 4 Speed Automatic 46RE
		84 = Quad Cab (131 WB)	EML = 5.0L 8 Cylinder	DDC = 5 Speed HD Manual
			EVA = 4.7L Magnum V8	DDK = 5 Speed HD Manual
			EP0 = All 2.5L	DG4 = Multispeed Automatic 45RFE
			EH0 = All 3.9L	DG0 = All Automatic Transmissions
			EM0 = All 5.9L	DBB = All Manual Transmissions
			EV0 = All 4.7L	

Lines,Brake,From EHCU or RWAL II to Frame-AN 1,AN 5
Figure 5-510

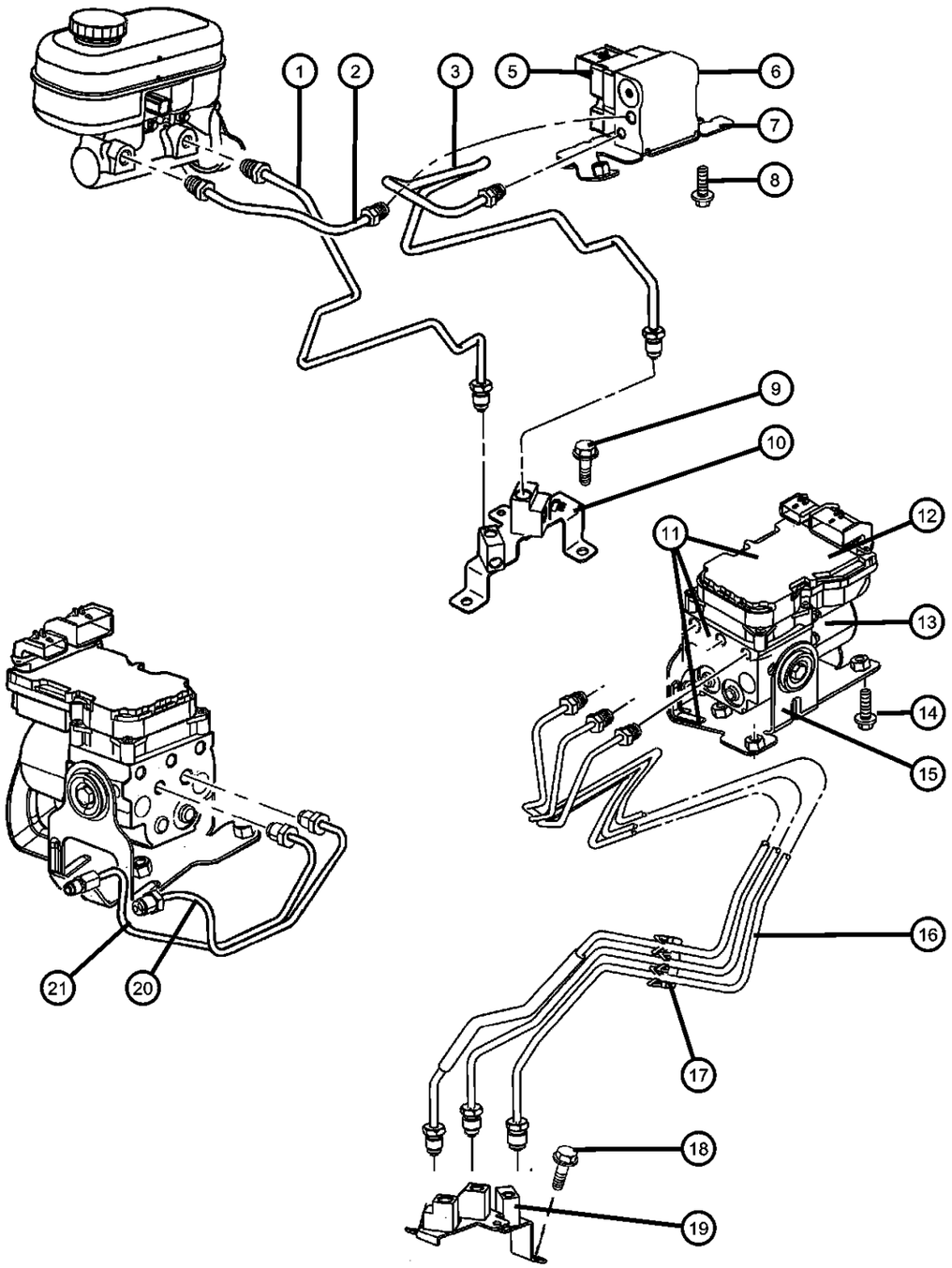

ITEM	PART NUMBER	QTY	LINE	SERIES	BODY	ENGINE	TRANS	TRIM	DESCRIPTION
Note:Sales Codes; [BGJ]=Brakes - Power Disc/Drum,Rear Anti-Lock [BGK]=Brakes -4-Wheel Anti-lock									
1	52010255AB	1							TUBE, Brake, [BGJ] Master Cylinder to Junction Block
2	52010258AB	1							TUBE, Brake, [BGJ] Master Cylinder to RWAL II
3									TUBE, Brake
	52010254AA	1							[BGJ] RWAL to Junction Block-Up To and Including 07-17-01
	52010254AB	1							[BGJ] RWAL to Junction Block-07-18-01 and After
-4	52008940	3							CLIP, Brake Line, [BGJ]
5	05080491AB	1							MODULE, Anti-lock Brakes, [BGJ]
6	52113417AD	1							CONTROL UNIT, Anti-Lock Brake, [BGJ] Includes Module and Bracket
7	05073228AA	1							BRACKET, Anti-Lock Brake Module, [BGJ], Mounting
8	06100583	3							BOLT AND CONED WASHER, Hex Head, M8x25x20, [BGJ] Anti-Lock Brake Control Unit, Mounting
9	34201888	2							SCREW, Hex Head, Junction Block, Mounting
10									BLOCK, Brake Line Union
	52009882AE	1	5						[BGJ] 2-Way
	52009889AE	1	1						[BGJ] 2-Way
11									CONTROL UNIT, Anti-Lock Brake
	52010219AD	1			31, 61				[BGK]
	52010226AD	1			84				[BGK]
12									MODULE, Anti-lock Brakes
	05080585AB	1			31, 61				[BGK]
	05080586AB	1			84				[BGK]
13									HYDRAULIC CONTROL UNIT, Anti-Lock Brake System
	05096267AA	1			31, 61				
		1			84				
14	06100583	3							BOLT AND CONED WASHER, Hex Head, M8x25x20, [BGK] Anti-Lock Brake Control Unit, Mounting

DAKOTA (AN)

SERIES	LINE	BODY	ENGINE	TRANSMISSION
L = Dakota (All)	1 = Dakota 2WD 5 = Dakota 4WD	61 = Regular Cab (112 WB) 31 = Club Cab (131 WB) 84 = Quad Cab (131 WB)	EPE = 2.5L 4 Cylinder EHC = 3.9L 6 Cylinder EML = 5.0L 8 Cylinder EVA = 4.7L Magnum V8 EP0 = All 2.5L EH0 = All 3.9L EM0 = All 5.9L EV0 = All 4.7L	DGK = 4 Speed Automatic 42RE DGT = 4 Speed Automatic 46RE DDC = 5 Speed HD Manual DDK = 5 Speed HD Manual DG4 = Multispeed Automatic 45RFE DG0 = All Automatic Transmissions DBB = All Manual Transmissions

Lines,Brake,From EHCU or RWAL II to Frame-AN 1,AN 5
Figure 5-510

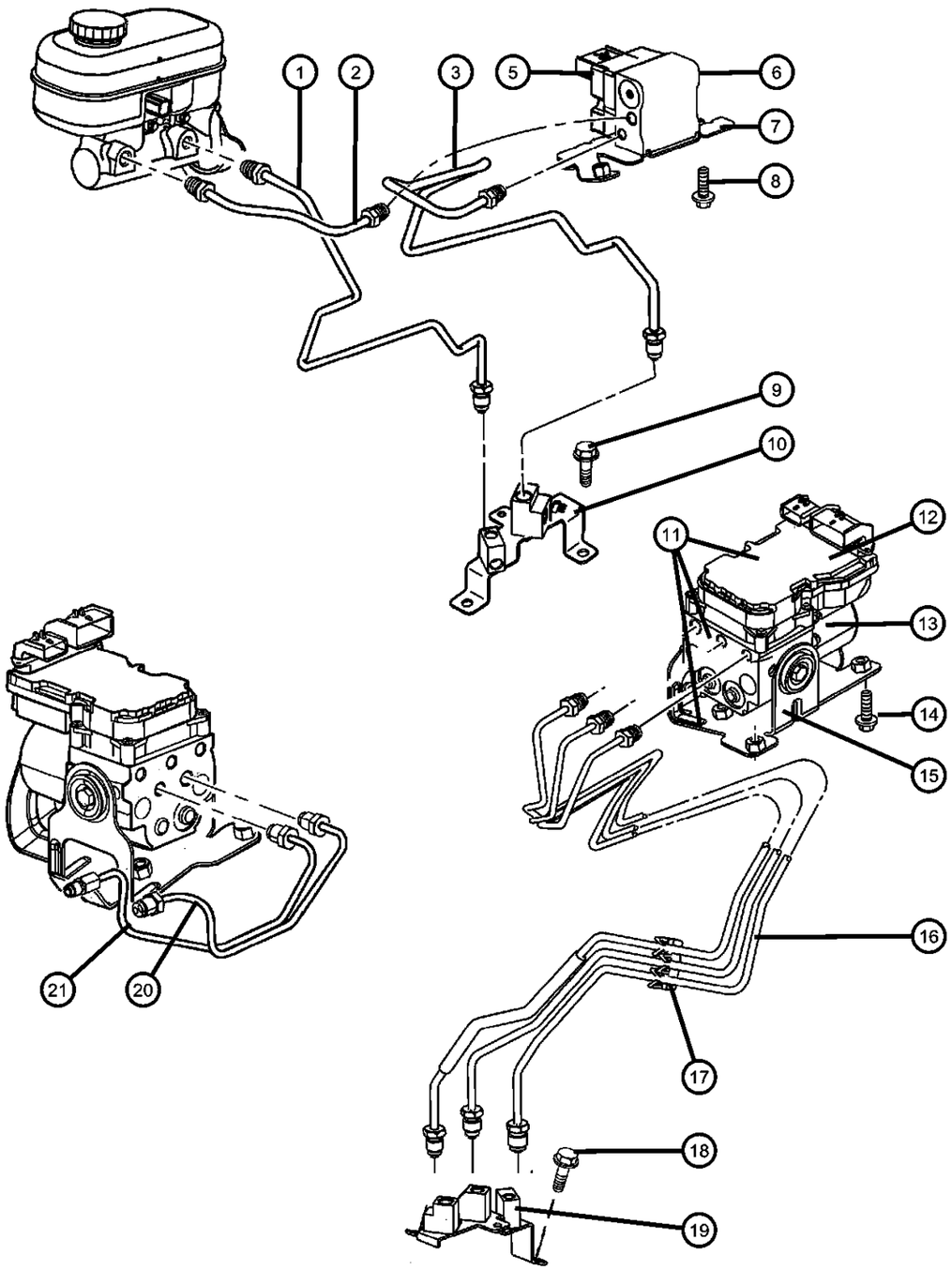

ITEM	PART NUMBER	QTY	LINE	SERIES	BODY	ENGINE	TRANS	TRIM	DESCRIPTION
15									BRACKET, Anti-Lock Brake Module
	05013303AA	1			31, 61				[BGK] Up To and Including 01-13-02, Mounting
		1			84				[BGK] Up To and Including 01-13-02, Mounting
	05093398AA	1			84				[BGK] 01-14-02 and After, Mounting
		1			31, 61				[BGK] 01-14-02 and After, Mounting
16	52009894AE	1							TUBE, Brake, [BGK] EHCU to Junction Block
17	52009163	3							CLIP, Brake Line, [BGK]
18	34201888	2							SCREW, Hex Head, Junction Block, Mounting
19									BLOCK, Brake Line Union
	52009887AE	1	1						[BGK] 3-Way
	52009888AD	1	5						[BGK] 3-Way
20	52010251AB	1							TUBE, Brake, [BGK] Master Cylinder to EHCU, Secondary
21	52010252AB	1							TUBE, Brake, [BGK] Master Cylinder to EHCU, Primary

DAKOTA (AN)

SERIES	LINE	BODY	ENGINE	TRANSMISSION
L = Dakota (All)	1 = Dakota 2WD	61 = Regular Cab (112 WB)	EPE = 2.5L 4 Cylinder	DGK = 4 Speed Automatic 42RE
	5 = Dakota 4WD	31 = Club Cab (131 WB)	EHC = 3.9L 6 Cylinder	DGT = 4 Speed Automatic 46RE
		84 = Quad Cab (131 WB)	EML = 5.0L 8 Cylinder	DDC = 5 Speed HD Manual
			EVA = 4.7L Magnum V8	DDK = 5 Speed HD Manual
			EP0 = All 2.5L	DG4 = Multispeed Automatic 45RFE
			EH0 = All 3.9L	DG0 = All Automatic Transmissions
			EM0 = All 5.9L	DBB = All Manual Transmissions
			EV0 = All 4.7L	

Lines and Hoses,Front-AN 1
Figure 5-520

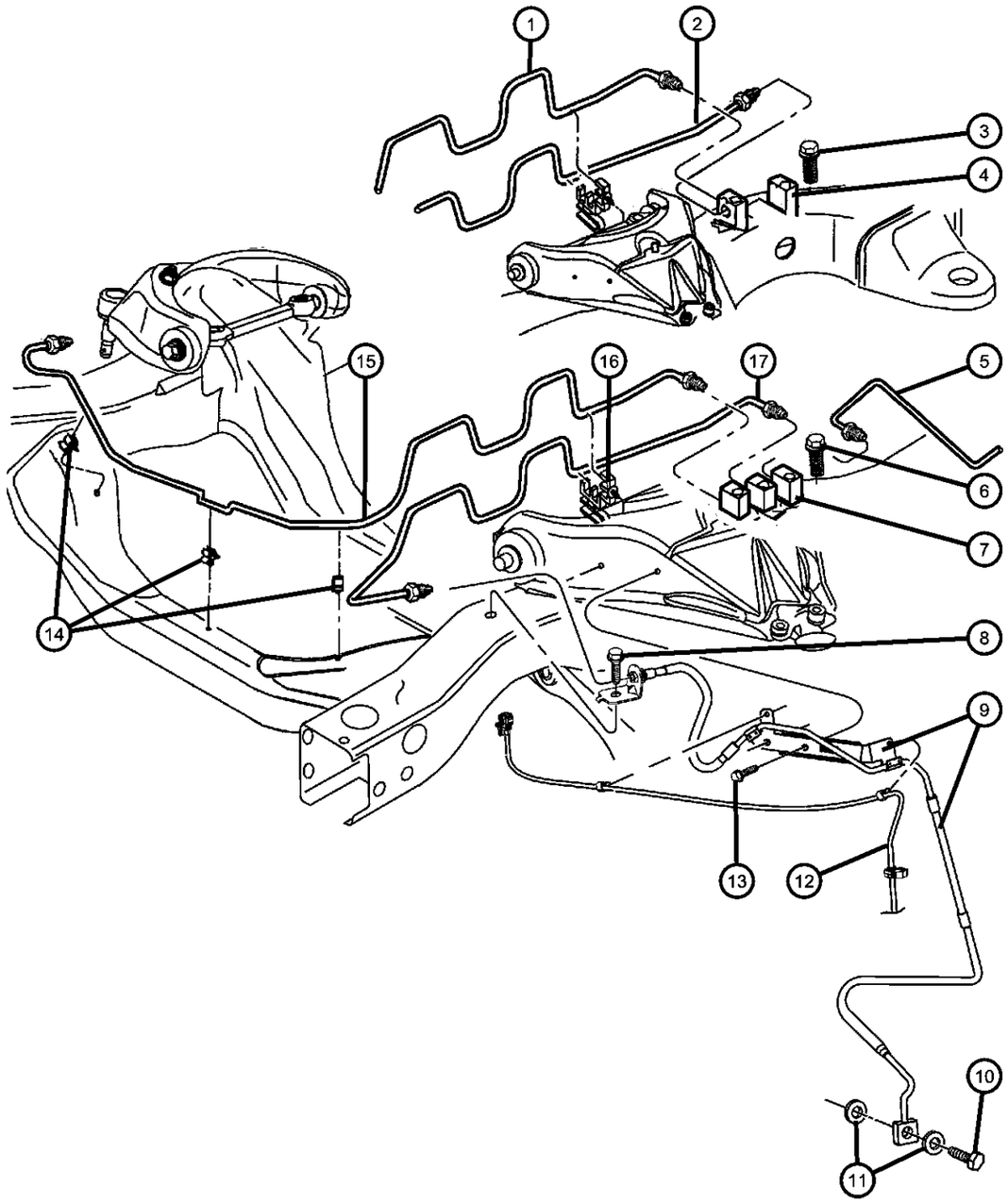

ITEM	PART NUMBER	QTY	LINE	SERIES	BODY	ENGINE	TRANS	TRIM	DESCRIPTION
Note:Sales Codes; [BGJ]=Brakes - Power Disc/Drum,Rear Anti-Lock [BGK]=Brakes -4-Wheel Anti-lock									
1	52010369AI	1	1						TUBE, Brake, [BGJ] Junction Block to Brake Hose, Right
2	52010371AG	1	1						TUBE, Brake, [BGJ] Junction Block to Brake Hose, Left
3	34201888	2							SCREW, Hex Head, Junction Block, Mounting
4	52009889AE	1	1						BLOCK, Brake Line Union, [BGJ] 2 Way
5									TUBE, Brake
	52009884AE	1			61				[BGJ,BGK] Junction Block to Brake Hose, Rear
	52009886AE	1			31, 84				[BGJ,BGK] Junction Block to Brake Hose, Rear
6	34201888	2							SCREW, Hex Head, Junction Block, Mounting
7	52009887AE	1	1						BLOCK, Brake Line Union, [BGK] 3 Way
8	34201888	2							SCREW, Hex Head, Brake Hose, Mounting
9									HOSE, Brake
	52008981AB	1	1						with Bracket, Left
	52008992AB	1	1						with Bracket, Right
10	06504019	2							BOLT, Banjo, Brake Hose to Caliper, Mounting
11	J4200303	4							WASHER, Brake Hose, To Caliper, Mounting
12									SENSOR, Anti-Lock Brake
	56028582AA	1	1						[BGK], Right
	56028583AA	1	1						[BGK], Left
13	34201888	4	1						SCREW, Hex Head, Front Brake Hose Bracket to UCA, Mounting
14	06506426AA	3	1						FASTENER, Push Pin
15	52010369AI	1	1						TUBE, Brake, [BGK] Junction Block to Brake Hose, Right
16	52008940	1	1						CLIP, Brake Line
17	52009904AD	1	1						TUBE, Brake, [BGK] Junction Block to Brake Hose, Left

DAKOTA (AN)

SERIES	LINE	BODY	ENGINE	TRANSMISSION
L = Dakota (All)	1 = Dakota 2WD	61 = Regular Cab (112 WB)	EPE = 2.5L 4 Cylinder	DGK = 4 Speed Automatic 42RE
	5 = Dakota 4WD	31 = Club Cab (131 WB)	EHC = 3.9L 6 Cylinder	DGT = 4 Speed Automatic 46RE
		84 = Quad Cab (131 WB)	EML = 5.0L 8 Cylinder	DDC = 5 Speed HD Manual
			EVA = 4.7L Magnum V8	DDK = 5 Speed HD Manual
			EP0 = All 2.5L	DG4 = Multispeed Automatic 45RFE
			EH0 = All 3.9L	DG0 = All Automatic Transmissions
			EM0 = All 5.9L	DBB = All Manual Transmissions
			EV0 = All 4.7L	

Lines and Hoses,Front-AN 5
Figure 5-530

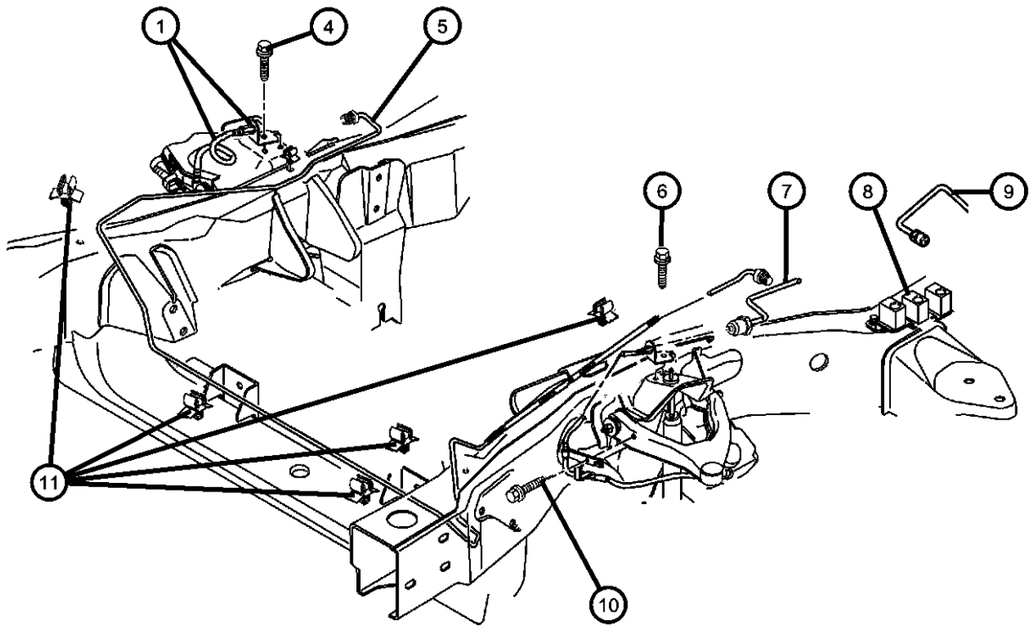

ITEM	PART NUMBER	QTY	LINE	SERIES	BODY	ENGINE	TRANS	TRIM	DESCRIPTION
Note:Sales Codes; [BGJ]=Brakes - Power Disc/Drum,Rear Anti-Lock [BGK]=Brakes -4-Wheel Anti-lock									
1									HOSE, Brake
	52009878AE	1	5						with Bracket, Right
	52009879AE	1	5						with Bracket, Left
-2	06504019	2							BOLT, Banjo
-3	J4200303	4							WASHER, Brake Hose
4	34201888	1							SCREW, Hex Head, Brake Hose, Mounting
5	52009880AG	1	5						TUBE, Brake, [BGJ,BGK] Junction Block to Brake Hose, Right
6	34201888	1							SCREW, Hex Head, Brake Hose, Mounting
7									TUBE, Brake
	52009881AG	1	5						[BGJ] Junction Block to Brake Hose, Left
	52009883AH	1	5						[BGK] Junction Block to Brake Hose, Left
8									BLOCK, Brake Line Union
	52009882AE	1	5						[BGJ] 2 Way
	52009888AD	1	5						[BGK] 3 Way
9									TUBE, Brake
	52009884AE	1			61				[BGJ,BGK] Junction Block to Brake Hose, Rear
	52009886AE	1			31, 84				[BGJ,BGK] Junction Block to Brake Hose, Rear
10	34201888	2							SCREW, Hex Head, Brake Hose Bracket to UCA, Mounting
11	06506426AA	4	5						FASTENER, Push Pin

DAKOTA (AN)

SERIES	LINE	BODY	ENGINE	TRANSMISSION
L = Dakota (All)	1 = Dakota 2WD 5 = Dakota 4WD	61 = Regular Cab (112 WB) 31 = Club Cab (131 WB) 84 = Quad Cab (131 WB)	EPE = 2.5L 4 Cylinder EHC = 3.9L 6 Cylinder EML = 5.0L 8 Cylinder EVA = 4.7L Magnum V8 EP0 = All 2.5L EH0 = All 3.9L EM0 = All 5.9L EV0 = All 4.7L	DGK = 4 Speed Automatic 42RE DGT = 4 Speed Automatic 46RE DDC = 5 Speed HD Manual DDK = 5 Speed HD Manual DG4 = Multispeed Automatic 45RFE DG0 = All Automatic Transmissions DBB = All Manual Transmissions

Lines and Hoses,Rear and Chassis
Figure 5-540

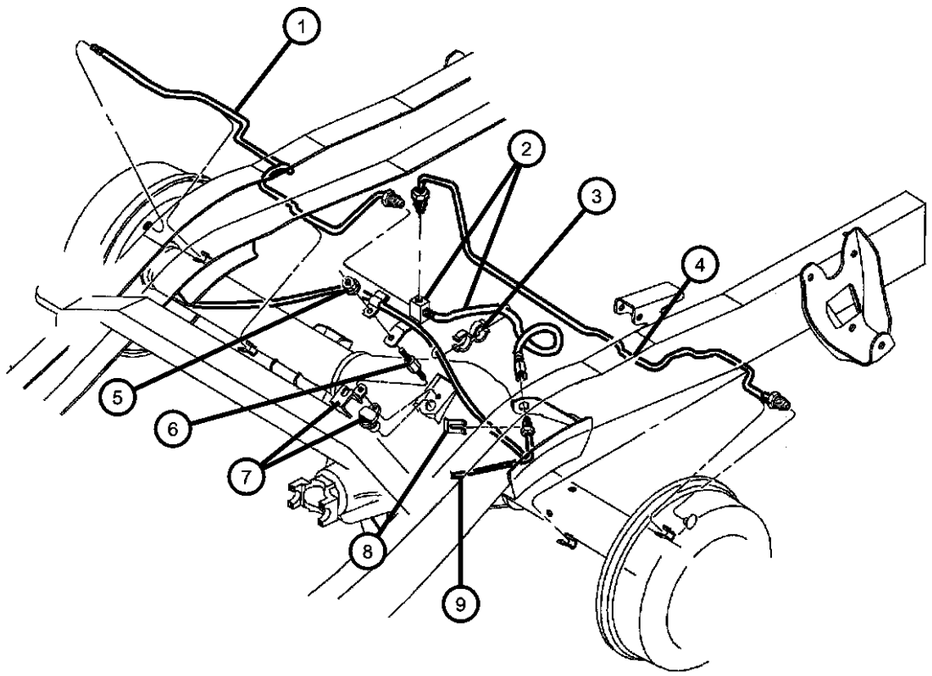

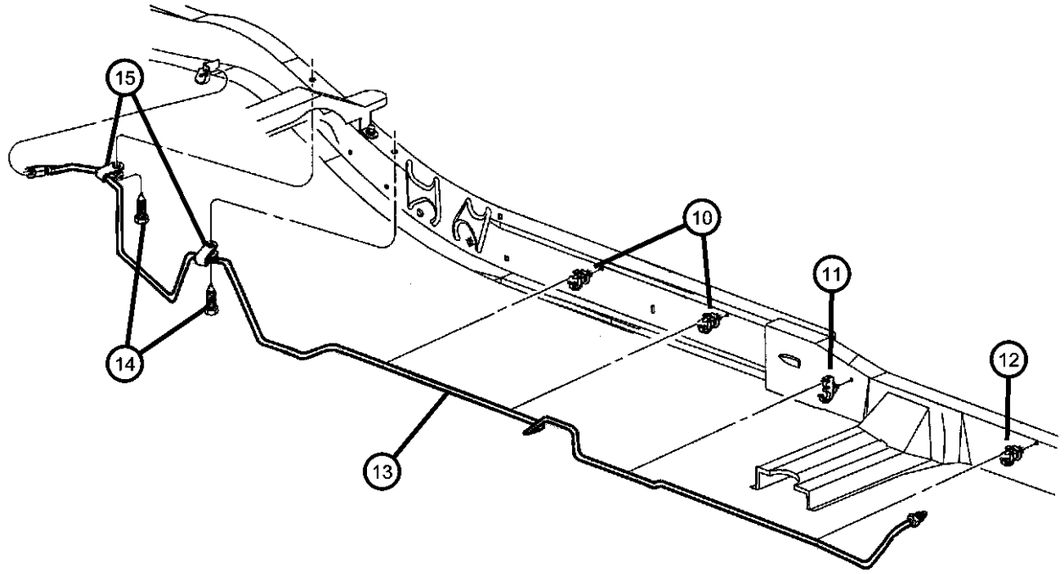

ITEM	PART NUMBER	QTY	LINE	SERIES	BODY	ENGINE	TRANS	TRIM	DESCRIPTION
Note:Sales Codes;									
[BKA]=Brakes - 11 x 2 Rear Drum									
[BKE]=Brakes - 9 x 2.5 Heavy Duty Rear Drum									
[BGJ]=Brakes - Power Disc/Drum, Rear Anti-lock									
[BGK]=Brakes - 4-Wheel Anti-Lock									
[DBB]=Transmissions - All Manual									
[DG0]=Transmissions - All Automatic									
[DRA]=Axle - Rear Corporate 8.25									
[DRB]=Axel - Rear Corporate 9.25 Light Duty									
1									TUBE, Brake
	52009852AD	1							[DRB,BKA], Right
	52009890AB	1			31, 61				[DRA,BKE], Right
	52009908AC	1			84				[DRA,BKA], Right
		1			31, 61				[DRA,BKA], Right
	52009940AC	1			31, 61				[DRB,BKE], Right
2	52008984AE	1							HOSE, BrakeRear
3	56021260	1							CLIP, Sensor
4									TUBE, Brake
	52009853AD	1							[DRB,BKA], Left
	52009891AB	1			31, 61				[DRA,BKE], Left
	52009909AC	1			84				[DRA,BKA], Left
		1			31, 61				[DRA,BKA], Left
	52009941AC	1			31, 61				[DRB,BKE], Left
5	00152472	1							NUT, Hex Flange Lock, .312-18
6	06035887	1							STUD, Axle Housing
7	56028187AD	1	1						SENSOR, Wheel Speed, [BGJ,BGK]
8	02208893	1	1						LOCK, Brake Hose
9									TUBE, Brake
	52009884AE	1			61				[BGJ,BGK] Junction Block to Brake Hose, Rear
	52009886AE	1			31, 84				[BGJ,BGK] Junction Block to Brake Hose, Rear
10									CLIP, Brake Line
	52007914	1			61				Brake Tube to Frame, Mounting
		2			31				Brake Tube to Frame, Mounting

DAKOTA (AN)

SERIES	LINE	BODY	ENGINE	TRANSMISSION
L = Dakota (All)	1 = Dakota 2WD	61 = Regular Cab (112 WB)	EPE = 2.5L 4 Cylinder	DGK = 4 Speed Automatic 42RE
	5 = Dakota 4WD	31 = Club Cab (131 WB)	EHC = 3.9L 6 Cylinder	DGT = 4 Speed Automatic 46RE
		84 = Quad Cab (131 WB)	EML = 5.0L 8 Cylinder	DDC = 5 Speed HD Manual
			EVA = 4.7L Magnum V8	DDK = 5 Speed HD Manual
			EP0 = All 2.5L	DG4 = Multispeed Automatic 45RFE
			EH0 = All 3.9L	DG0 = All Automatic Transmissions
			EM0 = All 5.9L	DBB = All Manual Transmissions
			EV0 = All 4.7L	

Lines and Hoses,Rear and Chassis
Figure 5-540

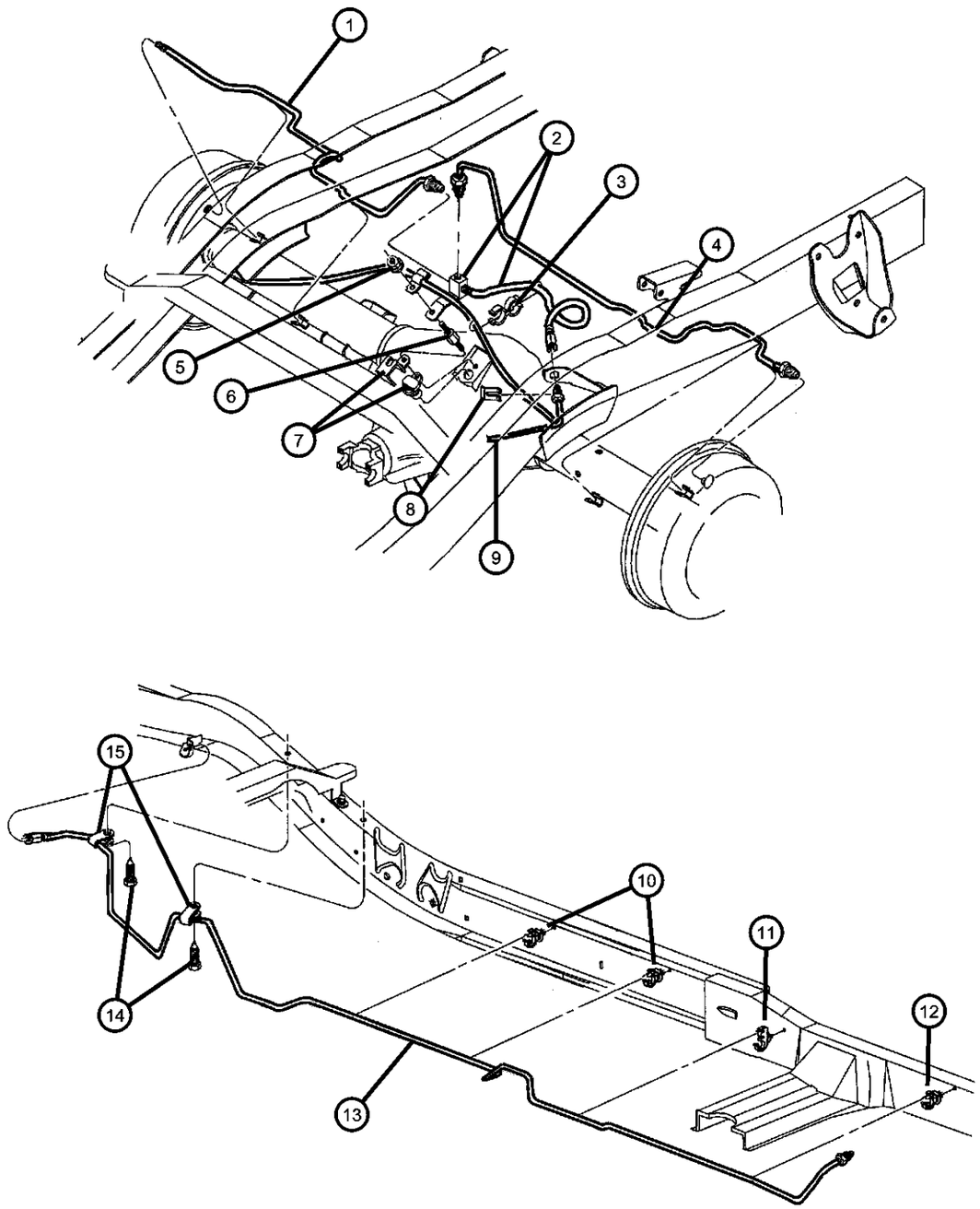

ITEM	PART NUMBER	QTY	LINE	SERIES	BODY	ENGINE	TRANS	TRIM	DESCRIPTION
11	52102304	2			84				CLIP, 3 Way, Brake Tube to Frame, Mounting
12									CLIP, Brake Line
	52007914	1			61				Brake Tube to Frame, Mounting
		2			31				Brake Tube to Frame, Mounting
13									TUBE, Brake
	52009884AE	1			61				[BGJ,BGK] Junction Block to Brake Hose, Rear
	52009886AE	1			31, 84				[BGJ,BGK] Junction Block to Brake Hose, Rear
14	34201888	2							SCREW, Hex Head, Brake Tube to Frame, Mounting
15	52008053	2							CLIP, Brake Line, Brake Tube to Frame, Mounting

DAKOTA (AN)

SERIES	LINE	BODY	ENGINE	TRANSMISSION
L = Dakota (All)	1 = Dakota 2WD	61 = Regular Cab (112 WB)	EPE = 2.5L 4 Cylinder	DGK = 4 Speed Automatic 42RE
	5 = Dakota 4WD	31 = Club Cab (131 WB)	EHC = 3.9L 6 Cylinder	DGT = 4 Speed Automatic 46RE
		84 = Quad Cab (131 WB)	EML = 5.0L 8 Cylinder	DDC = 5 Speed HD Manual
			EVA = 4.7L Magnum V8	DDK = 5 Speed HD Manual
			EP0 = All 2.5L	DG4 = Multispeed Automatic 45RFE
			EH0 = All 3.9L	DG0 = All Automatic Transmissions
			EM0 = All 5.9L	DBB = All Manual Transmissions
			EV0 = All 4.7L	

Pedals,Brake and Clutch
Figure 5-610

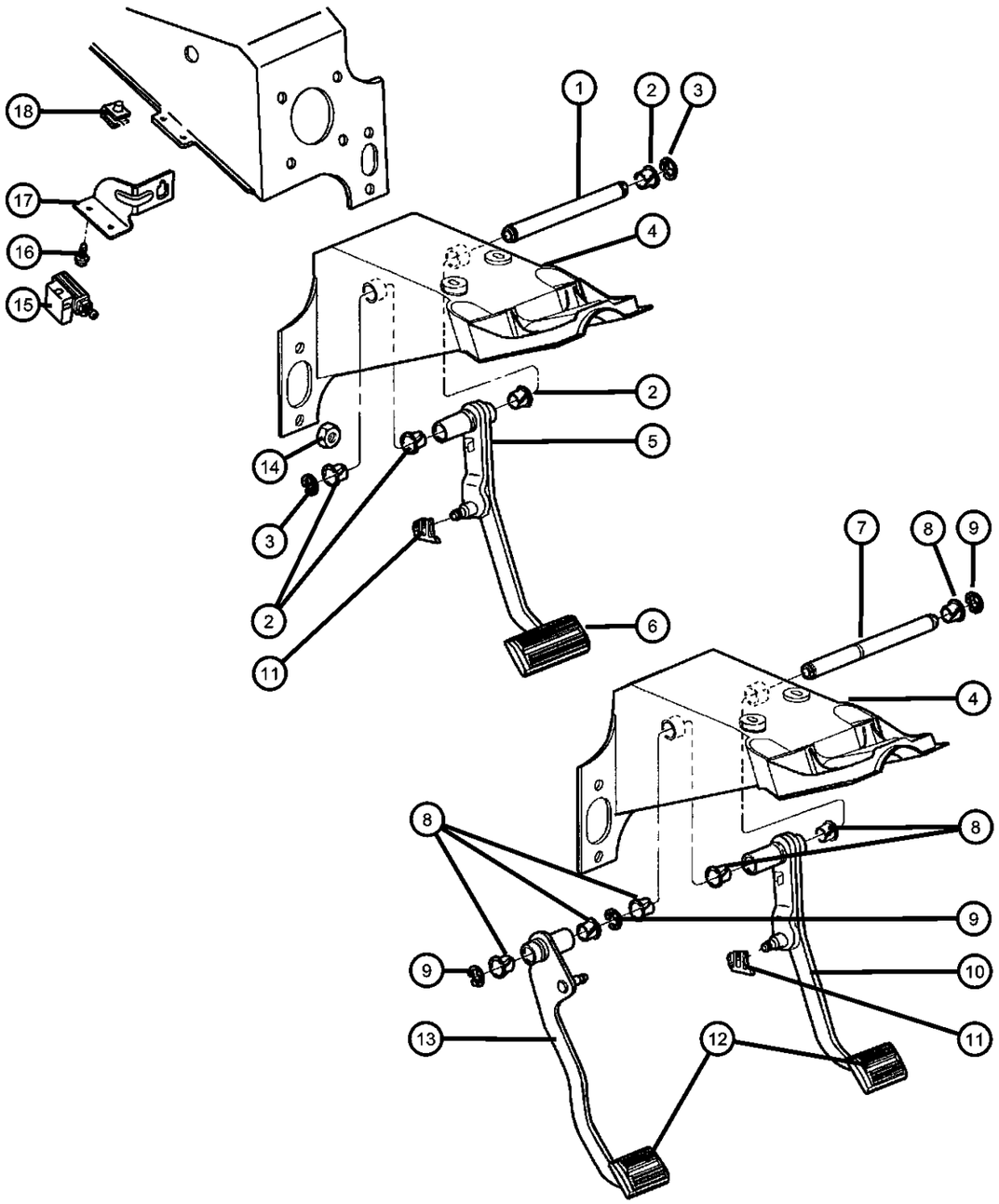

ITEM	PART NUMBER	QTY	LINE	SERIES	BODY	ENGINE	TRANS	TRIM	DESCRIPTION
Note:Sales Codes; [DBB] =Transmissions - All Manual [DG0]=Transmissions - All Automatic									
1	52078842	1							SHAFT, Brake Pedal Pivot, [DG0]
2	04294639	4							BUSHING, Clutch and Brake Pedal, [DG0]
3	04103262	2							RETAINER, Shaft, [DG0]
4	55351185AB	1							BRACKET, Steering Column
5	52009837AC	1							PEDAL, Brake, [DG0]
6	04779027	1							PAD, Pedal, [DG0]
7	52079290	1							SHAFT, Brake Pedal Pivot, [DBB]
8	04294639	6							BUSHING, Clutch and Brake Pedal, [DBB]
9	04103262	2							RETAINER, Shaft, [DBB]
10	52009836AC	1							PEDAL, Brake, [DBB]
11	04294036	1							CLIP
12	04019715AB	1							PAD, Pedal, [DBB]
13	52078748AD	1							PEDAL, Clutch, [DBB]
14	06503269	4							NUT, Hex, M10-1.5, Booster to Dash, Mounting
15	56045043AG	1							SWITCH, Stop Lamp
16	06101718	2							SCREW AND WASHER, Oval Head, M6x1x25, Brake Lamp Switch Bracket, Mounting
17	56020144AG	1							BRACKET, Brake Lamp SwitchMounting
18	06101712	2							NUT, U, M6x1.00, Brake Lamp Switch Bracket, Mounting

DAKOTA (AN)

SERIES	LINE	BODY	ENGINE	TRANSMISSION
L = Dakota (All)	1 = Dakota 2WD	61 = Regular Cab (112 WB)	EPE = 2.5L 4 Cylinder	DGK = 4 Speed Automatic 42RE
	5 = Dakota 4WD	31 = Club Cab (131 WB)	EHC = 3.9L 6 Cylinder	DGT = 4 Speed Automatic 46RE
		84 = Quad Cab (131 WB)	EML = 5.0L 8 Cylinder	DDC = 5 Speed HD Manual
			EVA = 4.7L Magnum V8	DDK = 5 Speed HD Manual
			EP0 = All 2.5L	DG4 = Multispeed Automatic 45RFE
			EH0 = All 3.9L	DG0 = All Automatic Transmissions
			EM0 = All 5.9L	DBB = All Manual Transmissions
			EV0 = All 4.7L	

Group - 6

Clutch

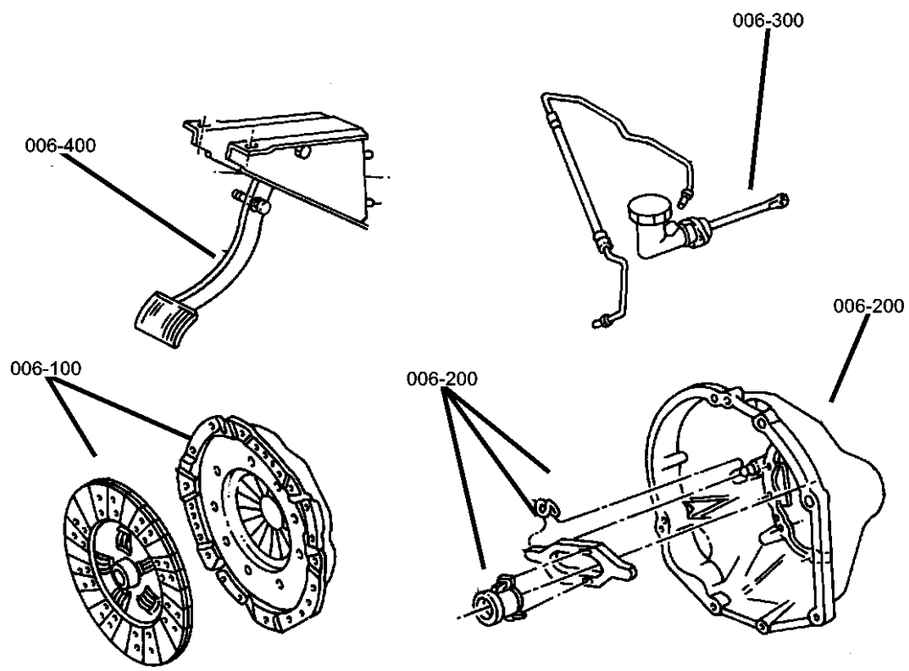

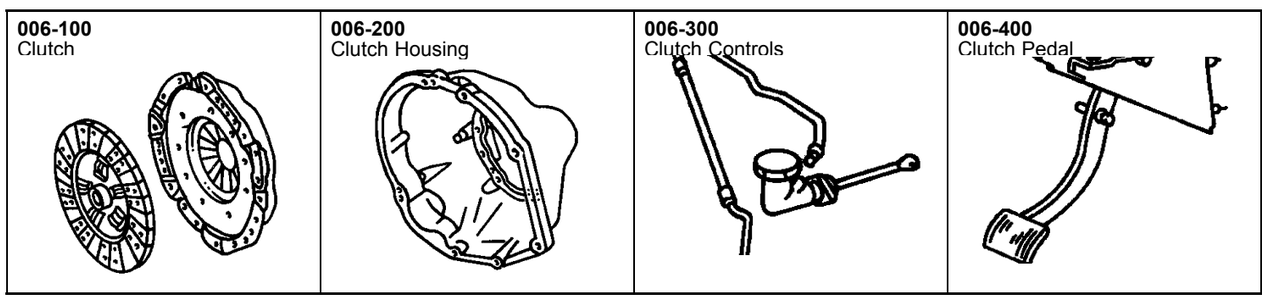

Group - 6 Clutch

Illustration Title — Group-Fig. No.

Clutch
Clutch Assembly ..... Fig. 6 - 110

Clutch Housing
Housing And Pan,Clutch ..... Fig. 6 - 210

Clutch Controls
Controls,Hydraulic Clutch ..... Fig. 6 - 310

Clutch Pedal
Pedal,Clutch ..... Fig. 6 - 410

Clutch Assembly
Figure 6-110

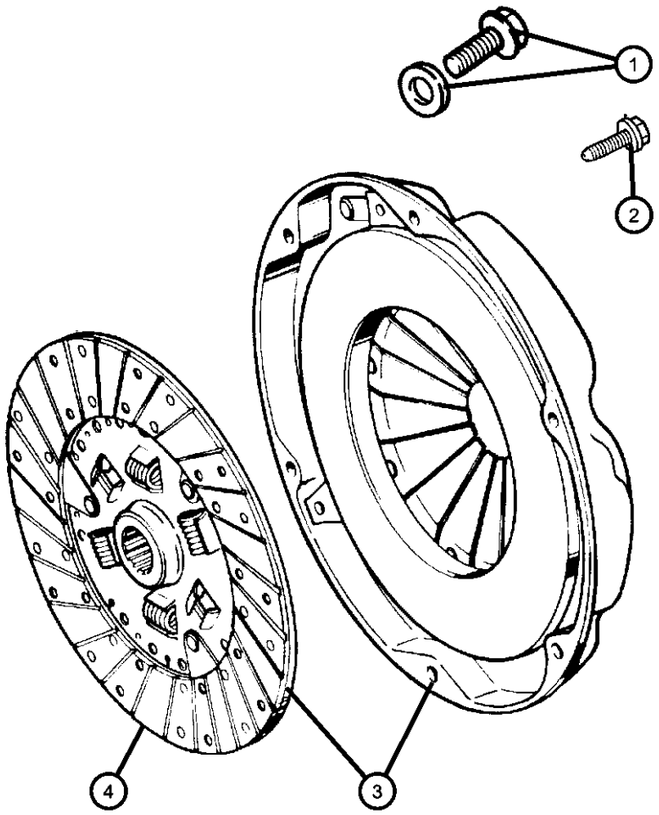

ITEM	PART NUMBER	QTY	LINE	SERIES	BODY	ENGINE	TRANS	TRIM	DESCRIPTION
Note:Sales Codes;									
[DBB]=All Manual Transmissions									
[DDC]=5-Speed Heavy Duty Manual Trasnmission									
[DDK]=5-Speed Heavy Duty Manual Transmission									
[EH0]=All V6 Engines									
[EP0]=All 2.5L 4 Cylinder Gas Engines									
[EV0]=All 4.7L V8 Engines									
1	06035626	6				EH0, EV0	DBB		BOLT, Hex Flange Head, Pressure Plate to Flywheel, Mounting
2	06101452	6				EP0	DDK		BOLT, Pressure Plate to Flywheel, Mounting
3									CLUTCH KIT, Pressure Plate and Disc
	05018352AB	1				EV0	DDC		
	05018354AB	1				EH0	DDC		
	05013024AC	1				EP0	DDK		
4									DISC, Clutch
	52107707AD	1				EP0	DDK		
	52107829AB	1				EH0	DDC		
	52107834AB	1				EV0	DDC		

DAKOTA (AN)

SERIES	LINE	BODY	ENGINE	TRANSMISSION
L = Dakota (All)	1 = Dakota 2WD	61 = Regular Cab (112 WB)	EPE = 2.5L 4 Cylinder	DGK = 4 Speed Automatic 42RE
	5 = Dakota 4WD	31 = Club Cab (131 WB)	EHC = 3.9L 6 Cylinder	DGT = 4 Speed Automatic 46RE
		84 = Quad Cab (131 WB)	EML = 5.0L 8 Cylinder	DDC = 5 Speed HD Manual
			EVA = 4.7L Magnum V8	DDK = 5 Speed HD Manual
			EP0 = All 2.5L	DG4 = Multispeed Automatic 45RFE
			EH0 = All 3.9L	DG0 = All Automatic Transmissions
			EM0 = All 5.9L	DBB = All Manual Transmissions
			EV0 = All 4.7L	

Housing And Pan,Clutch
Figure 6-210

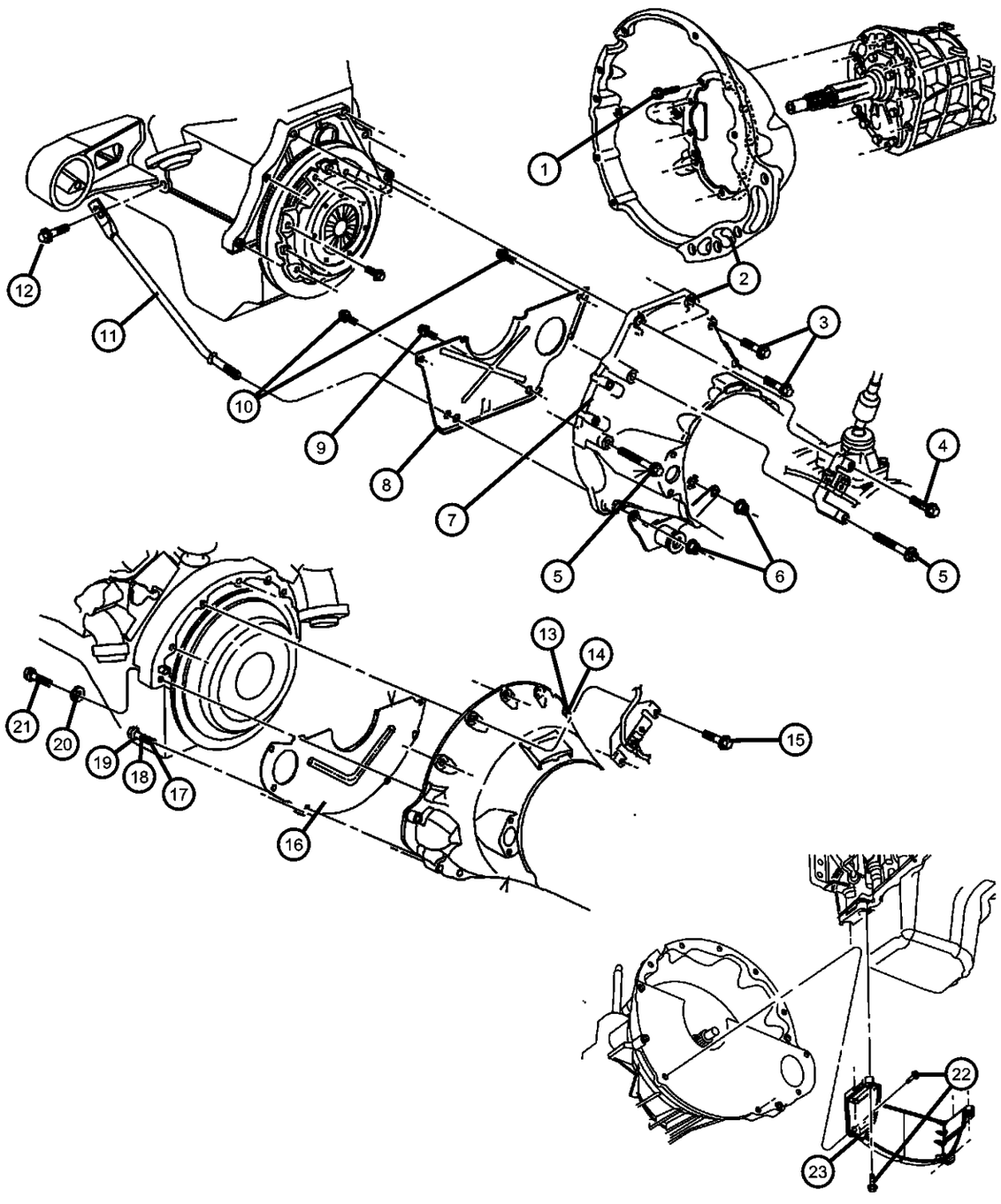

ITEM	PART NUMBER	QTY	LINE	SERIES	BODY	ENGINE	TRANS	TRIM	DESCRIPTION
Note: Sales Codes [DBB]=All Manual Transmissions [DDC]=5-Speed Heavy Duty Manual Trasnmission [DDK]=5-Speed Heavy Duty Manual Transmission [EH0]=All V6 Engines [EP0]=All 2.5L 4 Cylinder Gas Engines [EV0]=All 4.7L V8 Engines									
1	06503299	9					DDK		BOLT, Hex Head, Clutch Housing to Engine Block, Mounting
2	52107566AB	1	1			EP0	DDK		HOUSING, Clutch
3	11504922	2	1			EP0	DDK		BOLT, Hex Head, M12x1.75x50, Clutch Housing to Engine Block, Mounting
4	06100345	2	1			EP0	DDK		SCREW AND WASHER, Hex Flange Head, M12x1.75x45, Clutch Housing to Engine Block, Mounting
5	34201837	2	1			EP0	DDK		BOLT, Hex Flange Head, M12x1.75x90, Clutch Housing to Engine Block, Mounting
6	06502697	2	1			EP0	DDK		NUT, Hex Flange Lock, M12x1.75, Clutch Housing to Engine Block, Mounting
7	53006010	1				EP0			GROMMET, Timing Probe
8	53003382AB	1	1			EP0	DDK		SHIELD, Clutch Housing Dust
9	11505098	1	1			EP0	DDK		BOLT, Hex Flange Head, M12x1.75x60, Dust Shield to Clutch Housing, Mounting
10	11500986	2	1			EP0	DDK		BOLT, Hex Flange Head, M8x2.12x16, Strut to Clutch Housing, Mounting
11	52107598	1	1			EP0	DDK		STRUT, Engine
12	06035579	1	1			EP0	DDK		SCREW AND WASHER, Hex Head, .312-18x1.00, Strut to Engine Block, Mounting
13	52117709	1				EH0, EM0			GROMMET, Timing Probe
14	52107761AA	1				EV0	DDC		PLUG, Timing Probe
15									SCREW AND WASHER
	06022266	5				EH0	DDC		Clutch Housing to Engine Block, Mounting
		4				EV0	DDC		Clutch Housing to Engine Block, Mounting
16	52107753AC	1				EH0, EV0	DDC		SHIELD, Clutch Housing Dust

DAKOTA (AN)

SERIES	LINE	BODY	ENGINE	TRANSMISSION
L = Dakota (All)	1 = Dakota 2WD 5 = Dakota 4WD	61 = Regular Cab (112 WB) 31 = Club Cab (131 WB) 84 = Quad Cab (131 WB)	EPE = 2.5L 4 Cylinder EHC = 3.9L 6 Cylinder EML = 5.0L 8 Cylinder EVA = 4.7L Magnum V8 EP0 = All 2.5L EH0 = All 3.9L EM0 = All 5.9L EV0 = All 4.7L	DGK = 4 Speed Automatic 42RE DGT = 4 Speed Automatic 46RE DDC = 5 Speed HD Manual DDK = 5 Speed HD Manual DG4 = Multispeed Automatic 45RFE DG0 = All Automatic Transmissions DBB = All Manual Transmissions

Housing And Pan,Clutch
Figure 6-210

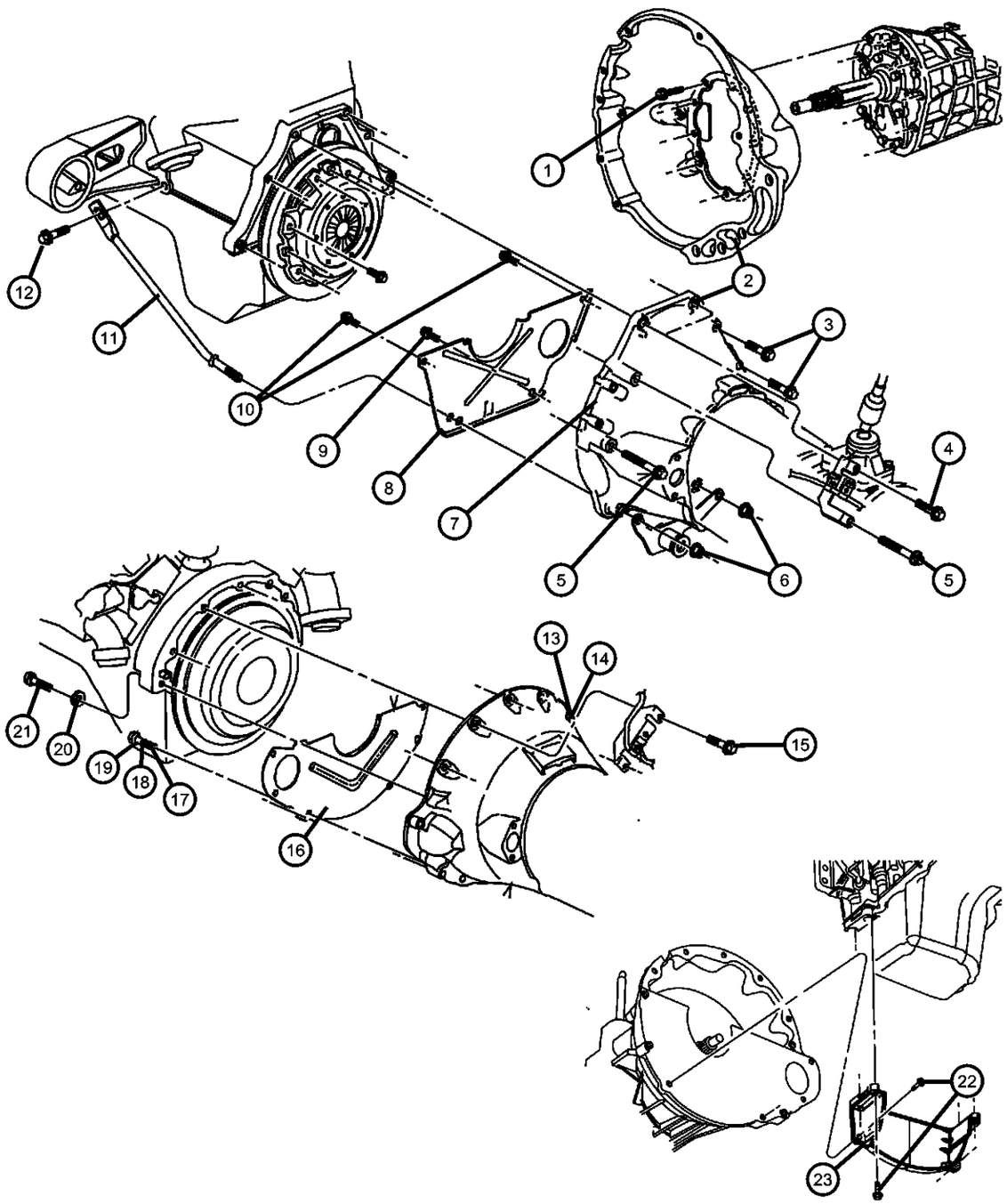

ITEM	PART NUMBER	QTY	LINE	SERIES	BODY	ENGINE	TRANS	TRIM	DESCRIPTION
17	06023092	1				EH0, EV0	DDC		SCREW AND WASHER, Hex Head, .25-20x.50, Dust Shield to Clutch Housing, Mounting
18	06033358	2	1			EH0, EV0	DDC		SCREW AND WASHER, Hex Head Locking, .437-14x1.25, Dust Shield to Clutch Housing, Mounting
19	06101985	2	1			EH0, EV0	DDC		SCREW AND WASHER, M10x1.50x45.00, Dust Shield to Clutch Housing, Mounting
20	06028758	2				EH0, EV0	DDC		WASHER, Coned, .480x.885x.121, Engine Block to Clutch Housing, Mounting
21	06028758	2							SCREW, Hex Head, (NOT SERVICED)
22	06101985	6				EV0	DBB		SCREW AND WASHER, M10x1.50x45.00, Dust Structural Cover to Engine/Transmission, Mounting
23	53020974	1				EV0	DBB		COVER, Dust Structural

DAKOTA (AN)

SERIES	LINE	BODY	ENGINE	TRANSMISSION
L = Dakota (All)	1 = Dakota 2WD	61 = Regular Cab (112 WB)	EPE = 2.5L 4 Cylinder	DGK = 4 Speed Automatic 42RE
	5 = Dakota 4WD	31 = Club Cab (131 WB)	EHC = 3.9L 6 Cylinder	DGT = 4 Speed Automatic 46RE
		84 = Quad Cab (131 WB)	EML = 5.0L 8 Cylinder	DDC = 5 Speed HD Manual
			EVA = 4.7L Magnum V8	DDK = 5 Speed HD Manual
			EP0 = All 2.5L	DG4 = Multispeed Automatic 45RFE
			EH0 = All 3.9L	DG0 = All Automatic Transmissions
			EM0 = All 5.9L	DBB = All Manual Transmissions
			EV0 = All 4.7L	

Controls,Hydraulic Clutch
Figure 6-310

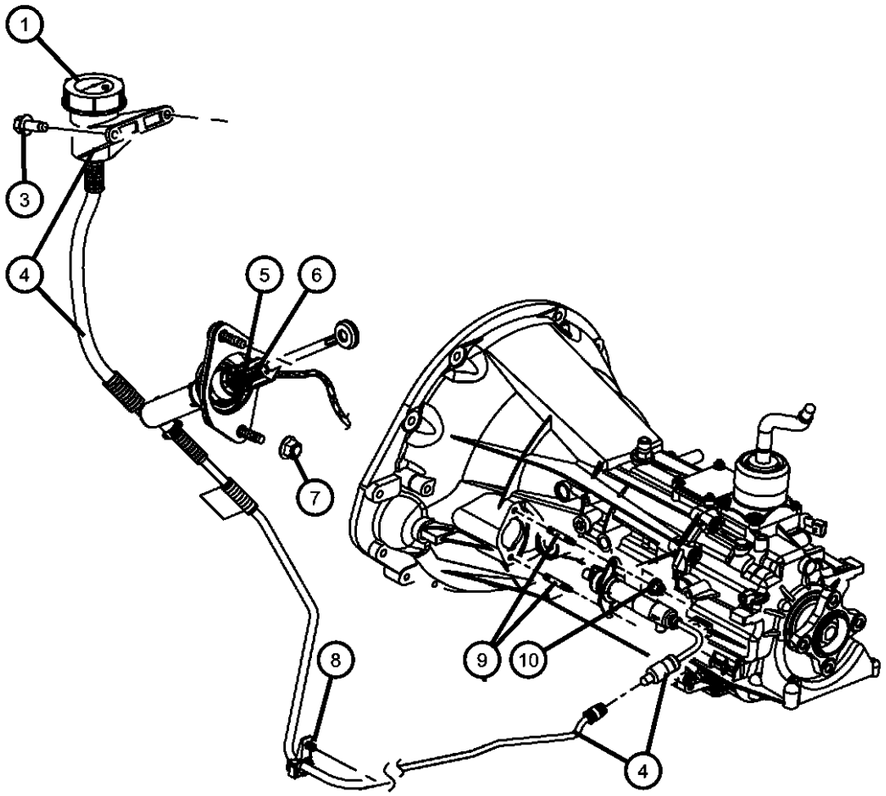

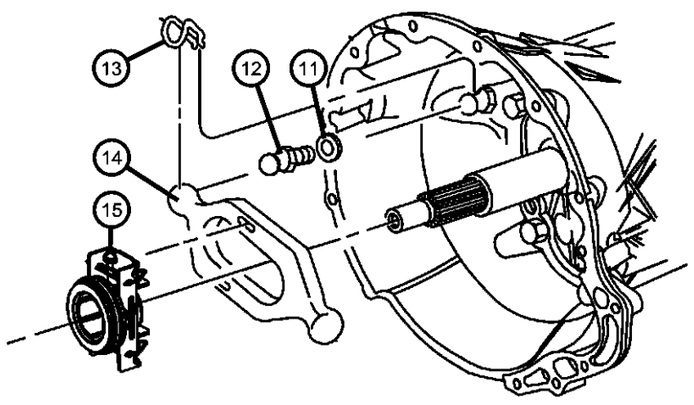

ITEM	PART NUMBER	QTY	LINE	SERIES	BODY	ENGINE	TRANS	TRIM	DESCRIPTION
Note:Sales Codes; [DBB]=All Manual Transmissions									
1	04720156	1					DBB		CAP, Clutch Reservoir
-2	04720157	1					DBB		DIAPHRAGM, Clutch Reservoir
3	06032988	2					DBB		SCREW, Clutch Master Cylinder Reservoir to Dash, Mounting
4	05072482AA	1					DBB		HYDRAULIC ASSEMBLY, Clutch Master Cylinder
5	53007944AB	1					DBB		SWITCH, Clutch Starter Interlock
6	05015960AA	1					DBB		COVER, Switch
7	06503269	2					DBB		NUT, Hex, M10-1.5, Clutch Master Cylinder to Dash, Mounting
8	05015260AA	1					DBB		CLIP, Clutch TubeMounting
9	06032878	2					DBB		STUD, .312-18x2.00, Clutch Slave Cylinder to Clutch Housing, Mounting
10	00152472	2					DBB		NUT, Clutch Slave Cylinder to Clutch Housing, Mounting
11	06022190	1					DBB		WASHER
12	52087542	1					DBB		PIVOT, Clutch Release
13	04338855	1					DBB		SPRING, Clutch Release, Clutch Release Pivot, Mounting
14	52107555	1					DBB		LEVER, Clutch Release
15	53008342	1					DBB		BEARING, Clutch Release

DAKOTA (AN)

SERIES	LINE	BODY	ENGINE	TRANSMISSION
L = Dakota (All)	1 = Dakota 2WD	61 = Regular Cab (112 WB)	EPE = 2.5L 4 Cylinder	DGK = 4 Speed Automatic 42RE
	5 = Dakota 4WD	31 = Club Cab (131 WB)	EHC = 3.9L 6 Cylinder	DGT = 4 Speed Automatic 46RE
		84 = Quad Cab (131 WB)	EML = 5.0L 8 Cylinder	DDC = 5 Speed HD Manual
			EVA = 4.7L Magnum V8	DDK = 5 Speed HD Manual
			EP0 = All 2.5L	DG4 = Multispeed Automatic 45RFE
			EH0 = All 3.9L	DG0 = All Automatic Transmissions
			EM0 = All 5.9L	DBB = All Manual Transmissions
			EV0 = All 4.7L	

Pedal,Clutch
Figure 6-410

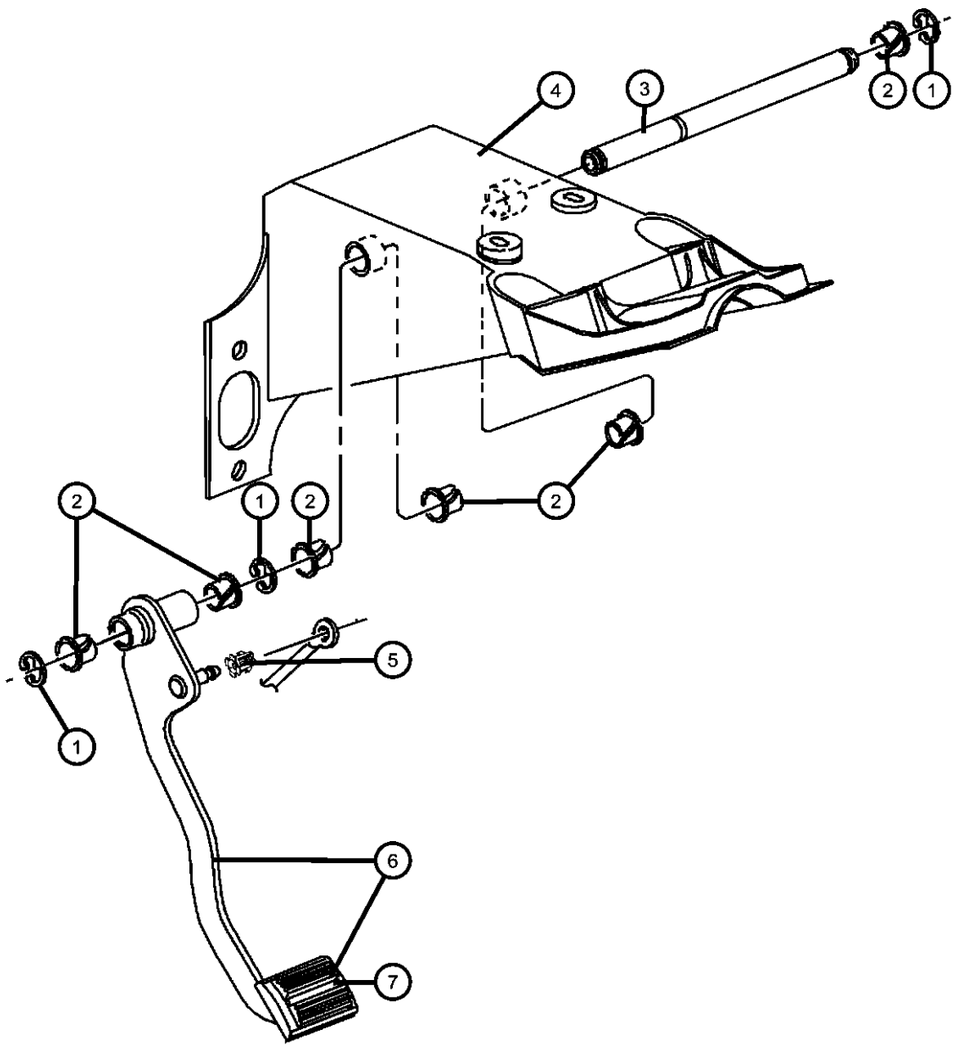

ITEM	PART NUMBER	QTY	LINE	SERIES	BODY	ENGINE	TRANS	TRIM	DESCRIPTION
Note: Sales Codes									
[DBB]=All Manual Transmissions									
1	04103262	2					DBB		RETAINER, Shaft
2	04294639	6					DBB		BUSHING, Clutch and Brake Pedal, Shaft
3	52079290	1					DBB		SHAFT, Clutch and Brake Pedal Pivot
4	55351185AB	1							BRACKET, Steering Column-Mounting
5	04643448	1					DBB		BUSHING, Hydraulic Clutch Actuator, Clutch Master Cylinder Push Rod to Pedal, Mounting
6	52078748AD	1					DBB		PEDAL, Clutch
7	04019715AB	1					DBB		PAD, Pedal

DAKOTA (AN)

SERIES	LINE	BODY	ENGINE	TRANSMISSION
L = Dakota (All)	1 = Dakota 2WD	61 = Regular Cab (112 WB)	EPE = 2.5L 4 Cylinder	DGK = 4 Speed Automatic 42RE
	5 = Dakota 4WD	31 = Club Cab (131 WB)	EHC = 3.9L 6 Cylinder	DGT = 4 Speed Automatic 46RE
		84 = Quad Cab (131 WB)	EML = 5.0L 8 Cylinder	DDC = 5 Speed HD Manual
			EVA = 4.7L Magnum V8	DDK = 5 Speed HD Manual
			EP0 = All 2.5L	DG4 = Multispeed Automatic 45RFE
			EH0 = All 3.9L	DG0 = All Automatic Transmissions
			EM0 = All 5.9L	DBB = All Manual Transmissions
			EV0 = All 4.7L	

Group - 7

Cooling

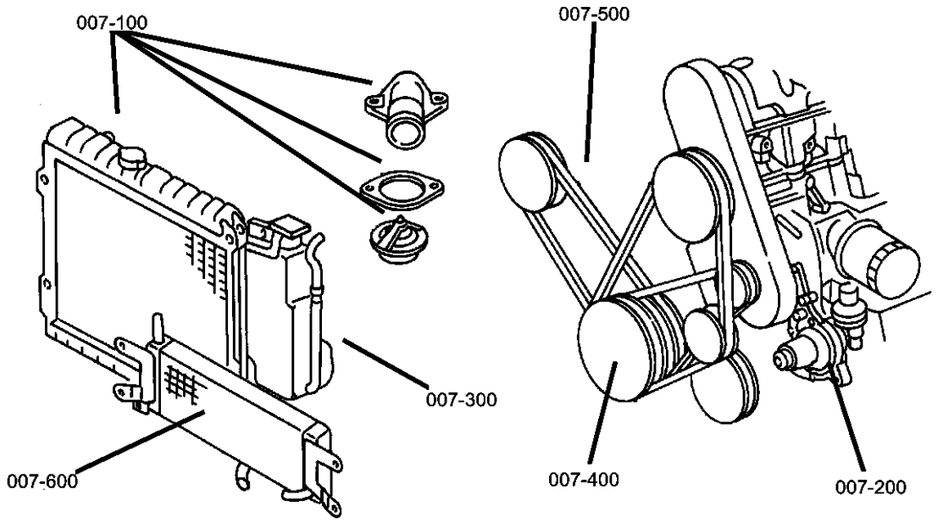

007-100 Radiator and Related Parts 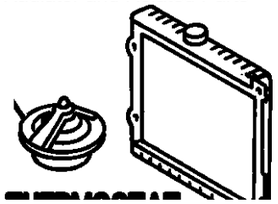	**007-200** Water Pump and Related Parts 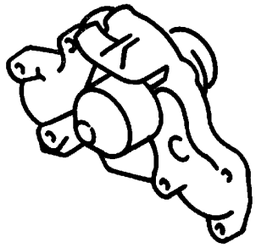	**007-300** Tank, Coolant Engine 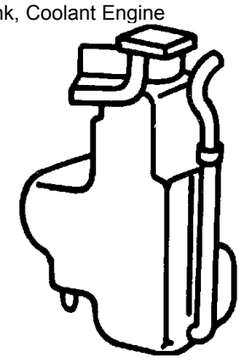	**007-400** Pulleys and Related Parts 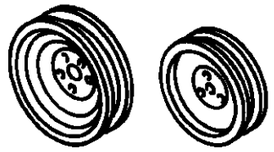
007-500 Drive Belts 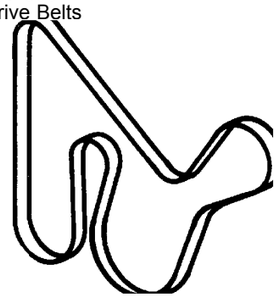	**007-600** Lines, Transmission Oil Cooler 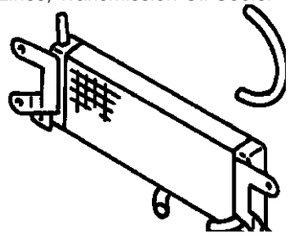	**007-700** Grilles 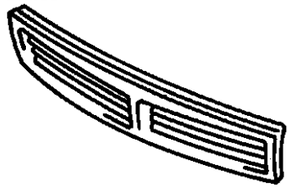	

Group - 7 Cooling

Illustration Title — Group-Fig. No.

Radiator and Related Parts
Radiator And Related Parts 2.5L Engine ..... Fig. 7 - 102
Radiator And Related Parts 3.9L Engine ..... Fig. 7 - 105
Radiator And Related Parts 4.7L Engine ..... Fig. 7 - 107
Radiator And Related Parts 5.9L Engine ..... Fig. 7 - 110
Radiator Closure And Air Deflector ..... Fig. 7 - 115

Water Pump and Related Parts
Water Pump And Related Parts 2.5L Engine ..... Fig. 7 - 205
Water Pump And Related Parts, 4.7L Engine ..... Fig. 7 - 207
Water Pump And Related Parts 3.9L, 5.9L Engine ..... Fig. 7 - 210

Tank, Coolant Engine
Coolant Tank ..... Fig. 7 - 305

Pulleys and Related Parts
Drive Pulleys 2.5L Engine ..... Fig. 7 - 405
Drive Pulleys, 4.7L Engine ..... Fig. 7 - 407
Drive Pulleys 3.9L, 5.9L Engine ..... Fig. 7 - 410

Drive Belts
Drive Belts 2.5L Engine ..... Fig. 7 - 507
Drive Belts 3.9L, 4.7L, 5.9L Engine ..... Fig. 7 - 510

Lines, Transmission Oil Cooler
Oil Cooler Lines ..... Fig. 7 - 605

Grilles
Grille And Related Parts ..... Fig. 7 - 705

Radiator And Related Parts 2.5L Engine
Figure 7-102

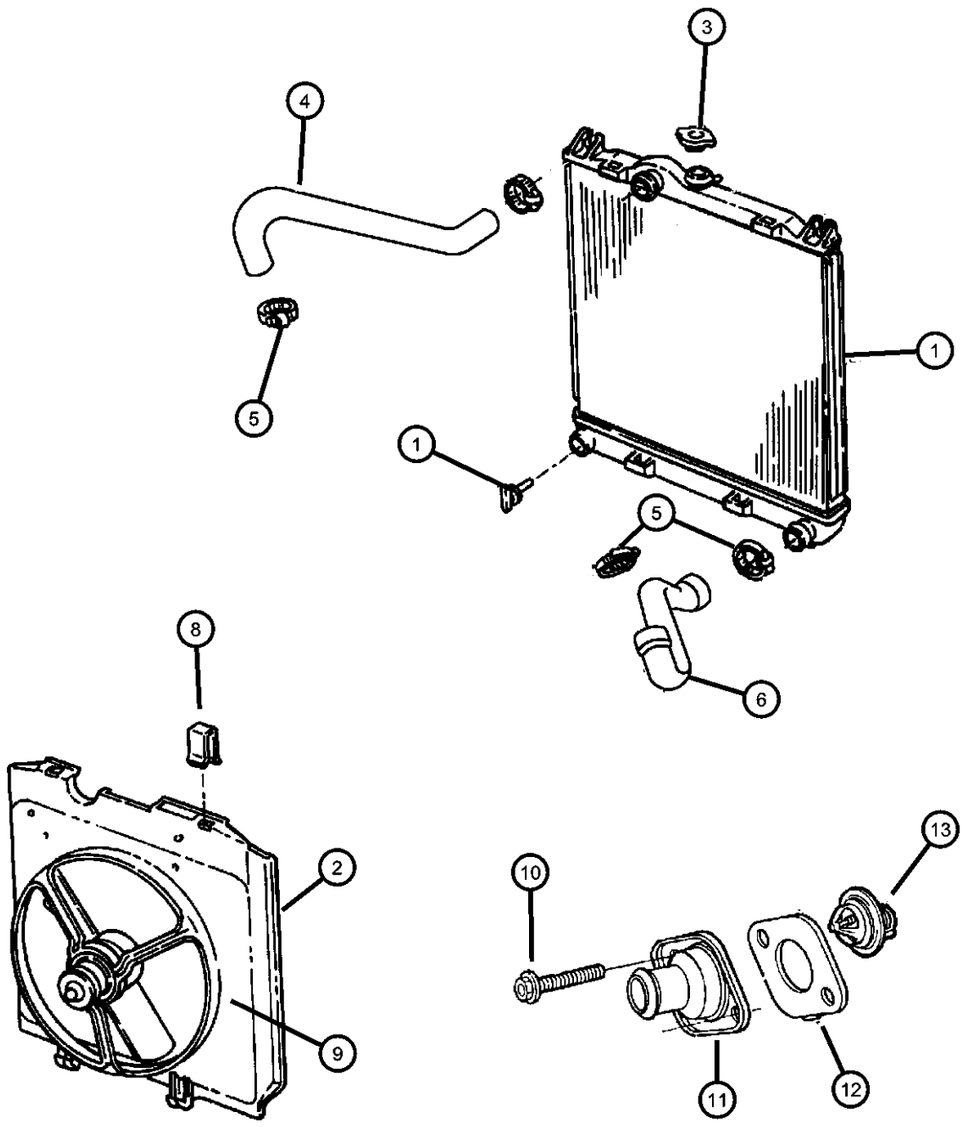

ITEM	PART NUMBER	QTY	LINE	SERIES	BODY	ENGINE	TRANS	TRIM	DESCRIPTION
Note: Sales Code EP0 = 2.5L Gas Engine									
1	52028917AC	1				EH0, EP0, EV0	DBB		RADIATOR, Engine Cooling
	05066386AA								Mopar Coolant 5 Year/100,000 Mile Formula 1 Gallon
2	05015423AA	1				EH0, EP0, EV0	DBB		ISOLATOR, Radiator
3	05278767AA	1				EP0			CAP, Radiator
4	52029191AF	1				EP0			HOSE, Radiator Inlet
5	52005580	1				EP0			CLAMP, Hose to Radiator
6	52029192AC	1				EP0			HOSE, Radiator Outlet
-7	52028854AA	1				EP0			BRACKET, Hose
8	04294036	1							CLIP
9	52030033AB	1				EH0, EP0, EV0	DBB		FAN MODULE, Radiator Cooling
10	06034927	1				EP0			SCREW AND WASHER, Hex Head, .312-18x.970
11	53006192	1				EP0			HOUSING, Thermostat
12	53020547AC	1				EP0			GASKET, Thermostat
13	52028186	1				EP0			THERMOSTAT, 195 Degrees

DAKOTA (AN)

SERIES	LINE	BODY	ENGINE	TRANSMISSION
L = Dakota (All)	1 = Dakota 2WD	61 = Regular Cab (112 WB)	EPE = 2.5L 4 Cylinder	DGK = 4 Speed Automatic 42RE
	5 = Dakota 4WD	31 = Club Cab (131 WB)	EHC = 3.9L 6 Cylinder	DGT = 4 Speed Automatic 46RE
		84 = Quad Cab (131 WB)	EML = 5.0L 8 Cylinder	DDC = 5 Speed HD Manual
			EVA = 4.7L Magnum V8	DDK = 5 Speed HD Manual
			EP0 = All 2.5L	DG4 = Multispeed Automatic 45RFE
			EH0 = All 3.9L	DG0 = All Automatic Transmissions
			EM0 = All 5.9L	DBB = All Manual Transmissions
			EV0 = All 4.7L	

Radiator And Related Parts 3.9L Engine
Figure 7-105

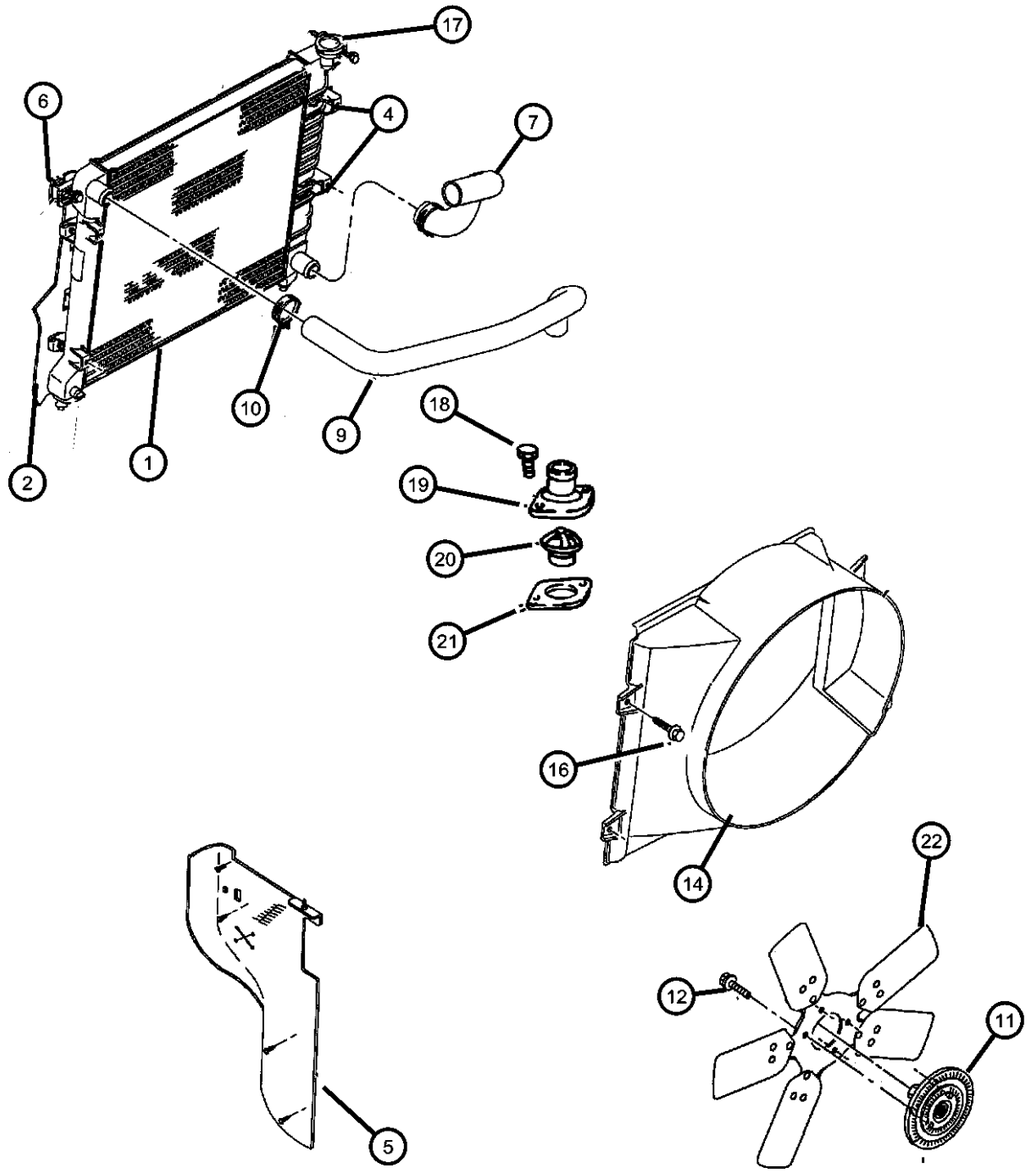

ITEM	PART NUMBER	QTY	LINE	SERIES	BODY	ENGINE	TRANS	TRIM	DESCRIPTION
Note: Sales Code EH0 = 3.9L Gas Engine									
Note: DG0 = Automatic Transmission, DBB = Manual Transmission.									
1									RADIATOR, Engine Cooling
	52028816AC	1				EH0	DG0		
	05066386AA								Mopar Coolant 5 Year/100,000 Mile Formula 1 Gallon
	52028917AC	1				EH0, EP0, EV0	DBB		
	05066386AA								Mopar Coolant 5 Year/100,000 Mile Formula 1 Gallon
2									ISOLATOR, Radiator
	05015421AA	1				EH0, EM0, EV0	DG0		Upper
		1				EH0, EP0, EV0	DBB		Upper
	05015422AA	1				EH0, EP0, EV0	DBB		Right, Lower
		1				EH0	DG0		Right, Lower
	05015423AA	1				EH0	DG0		Left, Lower
		1				EH0, EP0, EV0	DBB		Left, Lower
-3	52028779AB	1				EH0	DG0		COOLER, Auxiliary Oil
4									TUBE, Oil Cooler
	05015413AA	1				EH0	DG0		Inlet, lower
	05015414AA	1				EH0, EM0, EV0	DG0		Outlet, Top
	05015415AA	1				EH0	DG0		Lower, Aux. Cooler
	05015416AA	1				EH0	DG0		Upper, Aux. Cooler
5	52028913AB	1							SEAL, Rad Grille Supt To A/C
6	06505030AA	2							SCREW
7	52029194AC	1				EH0			HOSE, Radiator Outlet
-8	52028855AB	1				EH0, EM0			BRACKET, Hose
9	52029193AF	1				EH0			HOSE, Radiator Inlet
10	52029193AF	1							CLAMP, (NOT SERVICED)
11	52028799AC	1				EH0, EM0, EV0			DRIVE, Fan
12	06022225	4				EH0, EM0, EV0			SCREW AND WASHER, Hex Head, .312-18x.75
-13	05015532AB	1				EH0			SHROUD MODULE, FanUpper

DAKOTA (AN)

SERIES	LINE	BODY	ENGINE	TRANSMISSION
L = Dakota (All)	1 = Dakota 2WD 5 = Dakota 4WD	61 = Regular Cab (112 WB) 31 = Club Cab (131 WB) 84 = Quad Cab (131 WB)	EPE = 2.5L 4 Cylinder EHC = 3.9L 6 Cylinder EML = 5.0L 8 Cylinder EVA = 4.7L Magnum V8 EP0 = All 2.5L EH0 = All 3.9L EM0 = All 5.9L EV0 = All 4.7L	DGK = 4 Speed Automatic 42RE DGT = 4 Speed Automatic 46RE DDC = 5 Speed HD Manual DDK = 5 Speed HD Manual DG4 = Multispeed Automatic 45RFE DG0 = All Automatic Transmissions DBB = All Manual Transmissions

AR = use ase required - = Non illustrrated part

Radiator And Related Parts 3.9L Engine
Figure 7-105

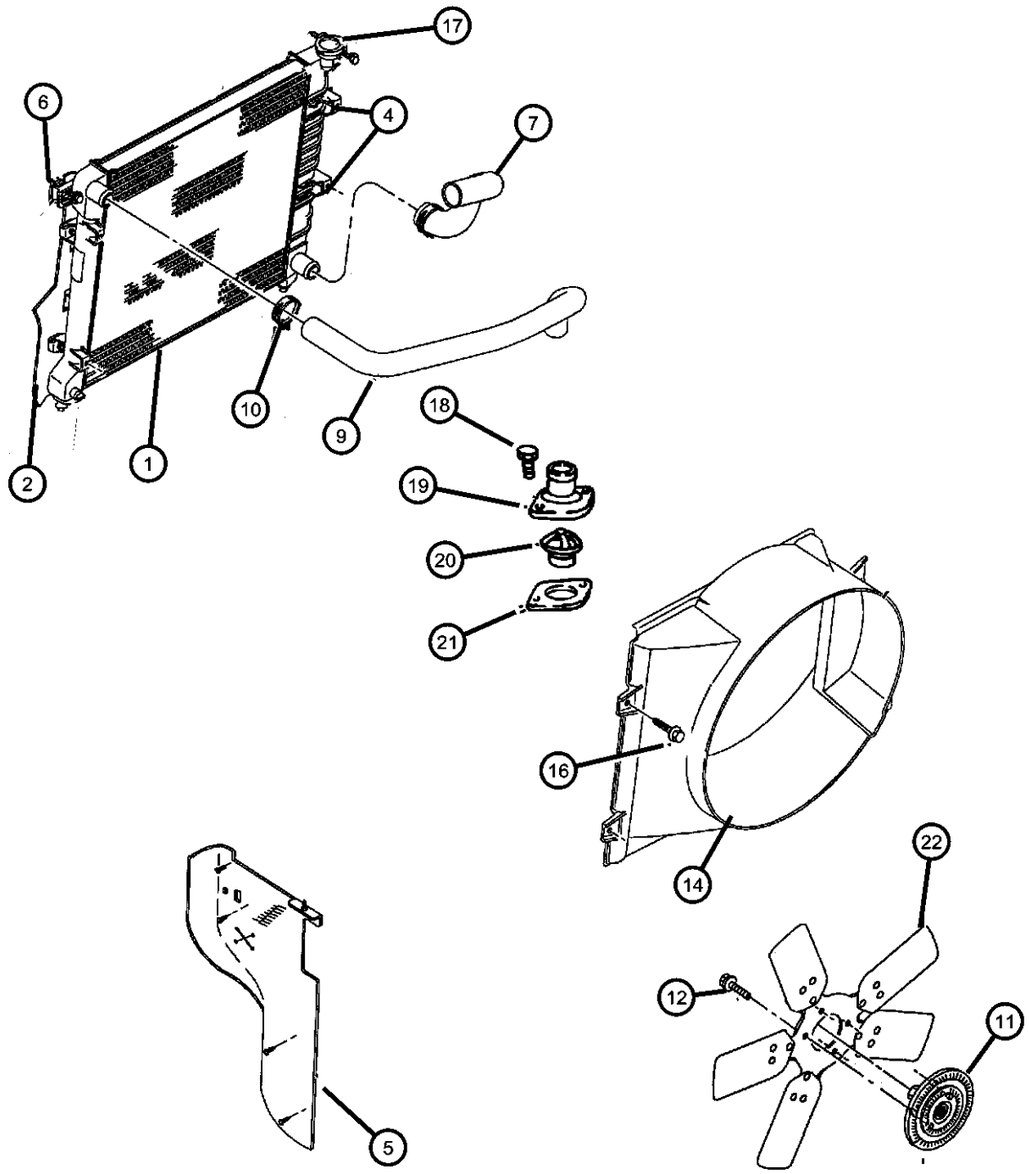

ITEM	PART NUMBER	QTY	LINE	SERIES	BODY	ENGINE	TRANS	TRIM	DESCRIPTION
14	52029181AC	1				EH0			SHROUD, FanLower
-15	05015536AA	1				EH0			EXTENSION, Fan Shroud
16	06101718	2							SCREW AND WASHER, Oval Head, M6x1x25
17	05278767AA	1				EH0			CAP, Radiator
18	06034549	14				EH0			SCREW, Hex Head, .312-18x.94
19	53020115	1				EH0, EM0			HOUSING, Thermostat
20	52028185	1				EH0			THERMOSTAT, 195 Degrees
21	53021051AB	1				EH0, EM0			GASKET, Thermostat
22	52029263AB	1				EH0			FAN, Cooling
-23	52030033AB	1				EH0	DG0		FAN MODULE, Radiator Cooling

DAKOTA (AN)

SERIES	LINE	BODY	ENGINE	TRANSMISSION
L = Dakota (All)	1 = Dakota 2WD	61 = Regular Cab (112 WB)	EPE = 2.5L 4 Cylinder	DGK = 4 Speed Automatic 42RE
	5 = Dakota 4WD	31 = Club Cab (131 WB)	EHC = 3.9L 6 Cylinder	DGT = 4 Speed Automatic 46RE
		84 = Quad Cab (131 WB)	EML = 5.0L 8 Cylinder	DDC = 5 Speed HD Manual
			EVA = 4.7L Magnum V8	DDK = 5 Speed HD Manual
			EP0 = All 2.5L	DG4 = Multispeed Automatic 45RFE
			EH0 = All 3.9L	DG0 = All Automatic Transmissions
			EM0 = All 5.9L	DBB = All Manual Transmissions
			EV0 = All 4.7L	

Radiator And Related Parts 4.7L Engine
Figure 7-107

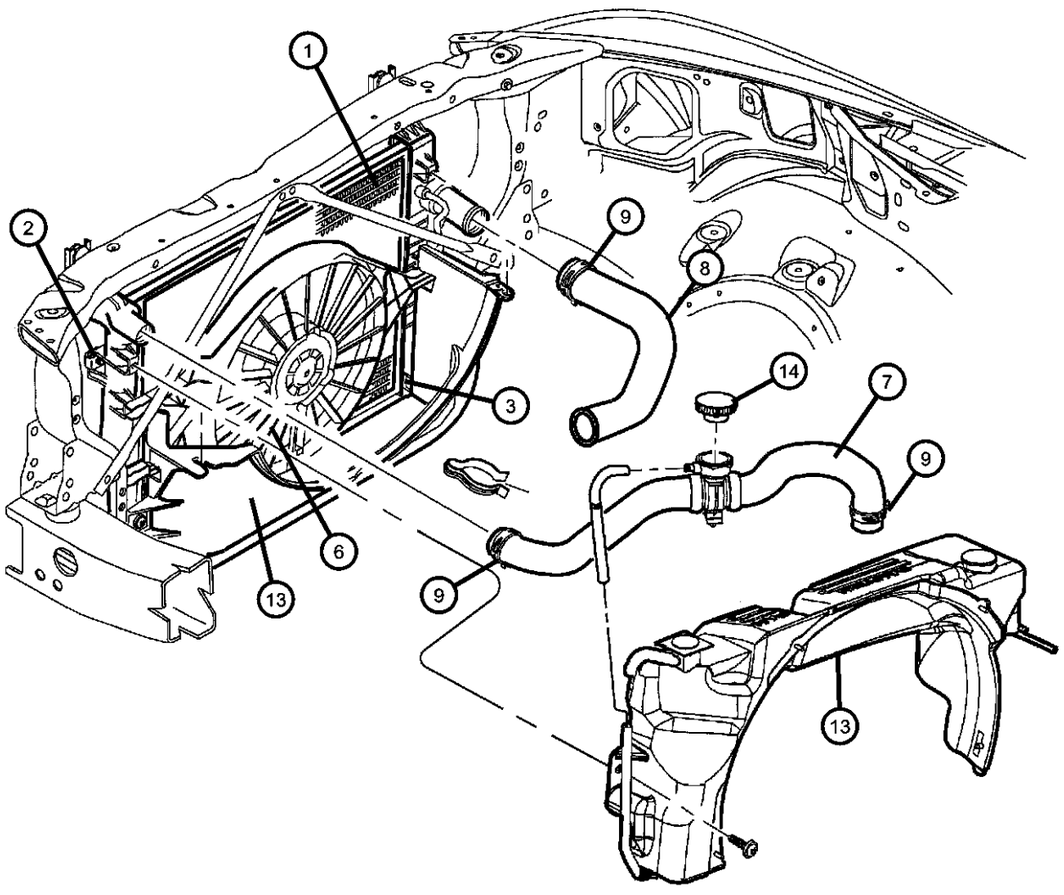

ITEM	PART NUMBER	QTY	LINE	SERIES	BODY	ENGINE	TRANS	TRIM	DESCRIPTION
1									RADIATOR, Engine Cooling
	52028816AC	1				EH0, EM0, EV0	DG0		without Max Cooling
	05066386AA								Mopar Coolant 5 Year/100,000 Mile Formula 1 Gallon
	52028818AC	1				EM0, EV0	DG0		with Max Cooling
	05066386AA								Mopar Coolant 5 Year/100,000 Mile Formula 1 Gallon
	52028917AC	1				EH0, EP0, EV0	DBB		
	05066386AA								Mopar Coolant 5 Year/100,000 Mile Formula 1 Gallon
2									ISOLATOR, Radiator
	05015421AA	1				EH0, EM0, EV0	DG0		Upper
		1				EH0, EP0, EV0	DBB		Upper
	05015422AA	1				EH0, EM0, EV0	DG0		Right, Lower
		1				EH0, EP0, EV0	DBB		Right, Lower
	05015423AA	1				EH0, EM0, EV0	DG0		Left, Lower
		1				EH0, EP0, EV0	DBB		Left, Lower
3									DRAINCOCK, Radiator
	52028466	1				EH0, EM0, EV0	DG0		
		1				EH0, EP0, EV0	DBB		
-4	52028779AB	1				EM0, EV0	DG0		COOLER, Auxiliary Oil
-5									TUBE, Oil Cooler
	05015413AA	1				EM0, EV0	DG0		Without [NMC], Inlet
	05015414AA	1				EH0, EM0, EV0	DG0		With [NMC], Inlet
	05015415AA	1				EM0, EV0	DG0		Outlet
6									FAN MODULE, Radiator Cooling
	52030033AB	1				EH0, EM0, EV0	DG0		
		1				EH0, EP0, EV0	DBB		
7	52028810AG	1				EV0			HOSE, Radiator Inlet

DAKOTA (AN)

SERIES	LINE	BODY	ENGINE	TRANSMISSION
L = Dakota (All)	1 = Dakota 2WD	61 = Regular Cab (112 WB)	EPE = 2.5L 4 Cylinder	DGK = 4 Speed Automatic 42RE
	5 = Dakota 4WD	31 = Club Cab (131 WB)	EHC = 3.9L 6 Cylinder	DGT = 4 Speed Automatic 46RE
		84 = Quad Cab (131 WB)	EML = 5.0L 8 Cylinder	DDC = 5 Speed HD Manual
			EVA = 4.7L Magnum V8	DDK = 5 Speed HD Manual
			EP0 = All 2.5L	DG4 = Multispeed Automatic 45RFE
			EH0 = All 3.9L	DG0 = All Automatic Transmissions
			EM0 = All 5.9L	DBB = All Manual Transmissions
			EV0 = All 4.7L	

Radiator And Related Parts 4.7L Engine
Figure 7-107

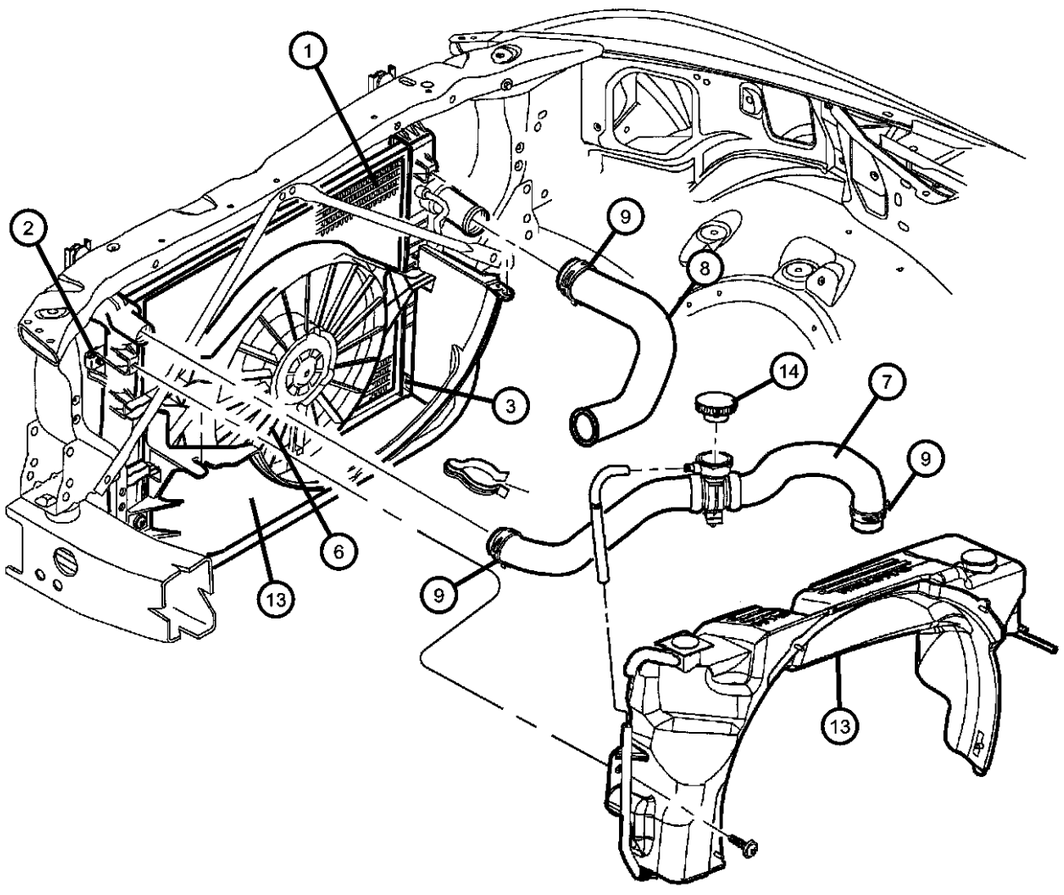

ITEM	PART NUMBER	QTY	LINE	SERIES	BODY	ENGINE	TRANS	TRIM	DESCRIPTION
8	52028813AC	1				EV0			HOSE, Radiator Outlet
9	06032277	1				EH0, EM0, EV0			CLAMP, Radiator
-10	52028916AB	1				EM0, EV0			FAN, Cooling
-11	52028799AC	1				EH0, EM0, EV0			DRIVE, Fan
-12	06022225	4				EH0, EM0, EV0			SCREW AND WASHER, Hex Head, .312-18x.75
13	05015534AB	1				EM0, EP0, EV0			SHROUD MODULE, FanUpper
14	05278767AA	1				EV0			CAP, Radiator
-15	52029185AC	1				EM0, EP0, EV0			SHROUD, Fan, Lower

DAKOTA (AN)

SERIES	LINE	BODY	ENGINE	TRANSMISSION
L = Dakota (All)	1 = Dakota 2WD	61 = Regular Cab (112 WB)	EPE = 2.5L 4 Cylinder	DGK = 4 Speed Automatic 42RE
	5 = Dakota 4WD	31 = Club Cab (131 WB)	EHC = 3.9L 6 Cylinder	DGT = 4 Speed Automatic 46RE
		84 = Quad Cab (131 WB)	EML = 5.0L 8 Cylinder	DDC = 5 Speed HD Manual
			EVA = 4.7L Magnum V8	DDK = 5 Speed HD Manual
			EP0 = All 2.5L	DG4 = Multispeed Automatic 45RFE
			EH0 = All 3.9L	DG0 = All Automatic Transmissions
			EM0 = All 5.9L	DBB = All Manual Transmissions
			EV0 = All 4.7L	

Radiator And Related Parts 5.9L Engine
Figure 7-110

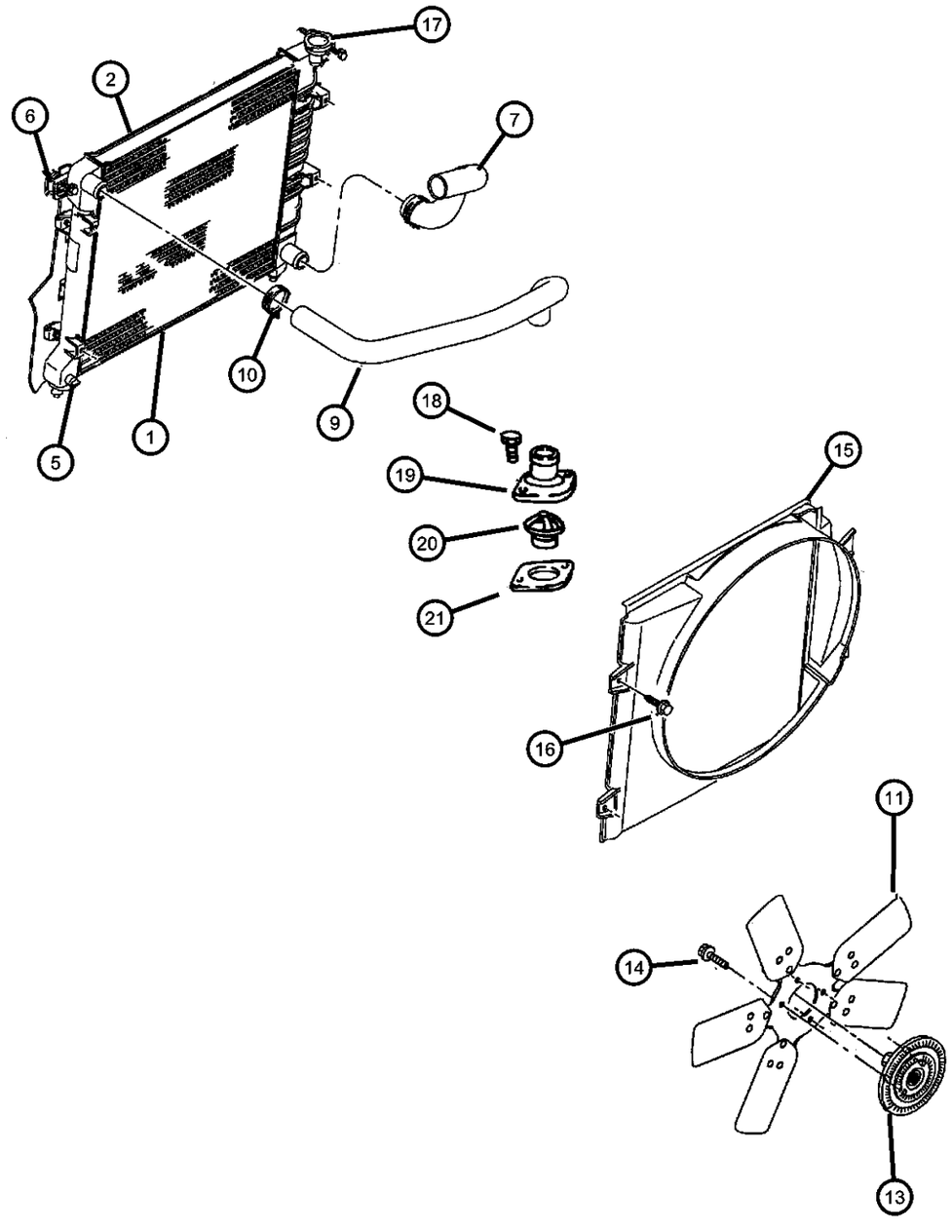

ITEM	PART NUMBER	QTY	LINE	SERIES	BODY	ENGINE	TRANS	TRIM	DESCRIPTION
Note: Sales Code EM0 = 5.9L Gas Engine									
1	52028818AC	1				EM0, EV0	DG0		RADIATOR, Engine Cooling
	05066386AA								Mopar Coolant 5 Year/100,000 Mile Formula 1 Gallon
2									ISOLATOR, Radiator
	05015421AA	1				EH0, EM0, EV0	DG0		Upper
	05015422AA	1				EM0, EV0	DG0		Right, Lower
	05015423AA	1				EM0, EV0	DG0		Left, Lower
-3	52028779AB	1				EM0, EV0	DG0		COOLER, Auxiliary Oil
-4									TUBE, Oil Cooler
	05015413AA	1				EM0, EV0	DG0		Inlet, Lower
	05015414AA	1				EH0, EM0, EV0	DG0		Outlet, Tube
	05015415AA	1				EM0, EV0	DG0		Lower, Aux. Cooler
	05015416AA	1				EM0, EV0	DG0		Upper, Aux. Cooler
5	52028466	1				EM0, EV0	DG0		DRAINCOCK, Radiator
6	06505030AA	2							SCREW
7	52029196AC	1				EM0			HOSE, Radiator Outlet
-8	52028855AB	1				EH0, EM0			BRACKET, Hose
9	52029195AF	1				EM0			HOSE, Radiator Inlet
10	52029195AF	1							CLAMP, (NOT SERVICED)
11	52028916AB	1				EM0, EV0			FAN, Cooling
-12	52030033AD	1				EM0, EV0	DG0		FAN MODULE, Radiator Cooling, Electric
13	52028799AC	1				EH0, EM0, EV0			DRIVE, Fan
14	06022225	4				EH0, EM0, EV0			SCREW AND WASHER, Hex Head, .312-18x.75
15	52029185AC	1				EM0, EP0, EV0			SHROUD, Fan
16	06101718	2							SCREW AND WASHER, Oval Head, M6x1x25
17	05278767AA	1				EM0			CAP, Radiator
18	06034549	18				EM0			SCREW, Hex Head, .312-18x.94
19	53020115	1				EH0, EM0			HOUSING, Thermostat

DAKOTA (AN)

SERIES	LINE	BODY	ENGINE	TRANSMISSION
L = Dakota (All)	1 = Dakota 2WD 5 = Dakota 4WD	61 = Regular Cab (112 WB) 31 = Club Cab (131 WB) 84 = Quad Cab (131 WB)	EPE = 2.5L 4 Cylinder EHC = 3.9L 6 Cylinder EML = 5.0L 8 Cylinder EVA = 4.7L Magnum V8 EP0 = All 2.5L EH0 = All 3.9L EM0 = All 5.9L EV0 = All 4.7L	DGK = 4 Speed Automatic 42RE DGT = 4 Speed Automatic 46RE DDC = 5 Speed HD Manual DDK = 5 Speed HD Manual DG4 = Multispeed Automatic 45RFE DG0 = All Automatic Transmissions DBB = All Manual Transmissions

Radiator And Related Parts 5.9L Engine
Figure 7-110

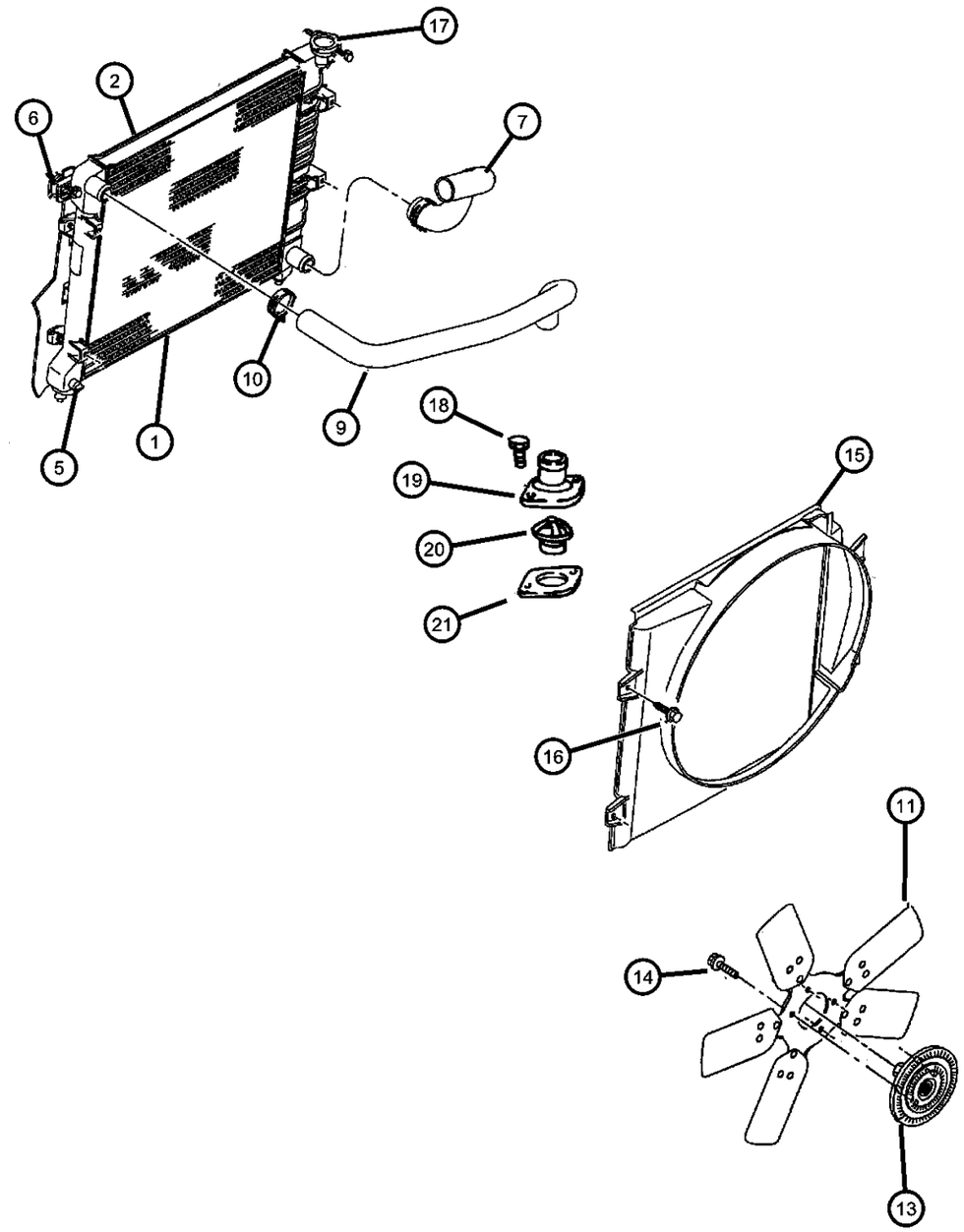

ITEM	PART NUMBER	QTY	LINE	SERIES	BODY	ENGINE	TRANS	TRIM	DESCRIPTION
20	52028185	1				EM0			THERMOSTAT, 195 Degrees
21	53021051AB	1				EH0, EM0			GASKET, Thermostat

DAKOTA (AN)

SERIES	LINE	BODY	ENGINE	TRANSMISSION
L = Dakota (All)	1 = Dakota 2WD	61 = Regular Cab (112 WB)	EPE = 2.5L 4 Cylinder	DGK = 4 Speed Automatic 42RE
	5 = Dakota 4WD	31 = Club Cab (131 WB)	EHC = 3.9L 6 Cylinder	DGT = 4 Speed Automatic 46RE
		84 = Quad Cab (131 WB)	EML = 5.0L 8 Cylinder	DDC = 5 Speed HD Manual
			EVA = 4.7L Magnum V8	DDK = 5 Speed HD Manual
			EP0 = All 2.5L	DG4 = Multispeed Automatic 45RFE
			EH0 = All 3.9L	DG0 = All Automatic Transmissions
			EM0 = All 5.9L	DBB = All Manual Transmissions
			EV0 = All 4.7L	

Radiator Closure And Air Deflector
Figure 7-115

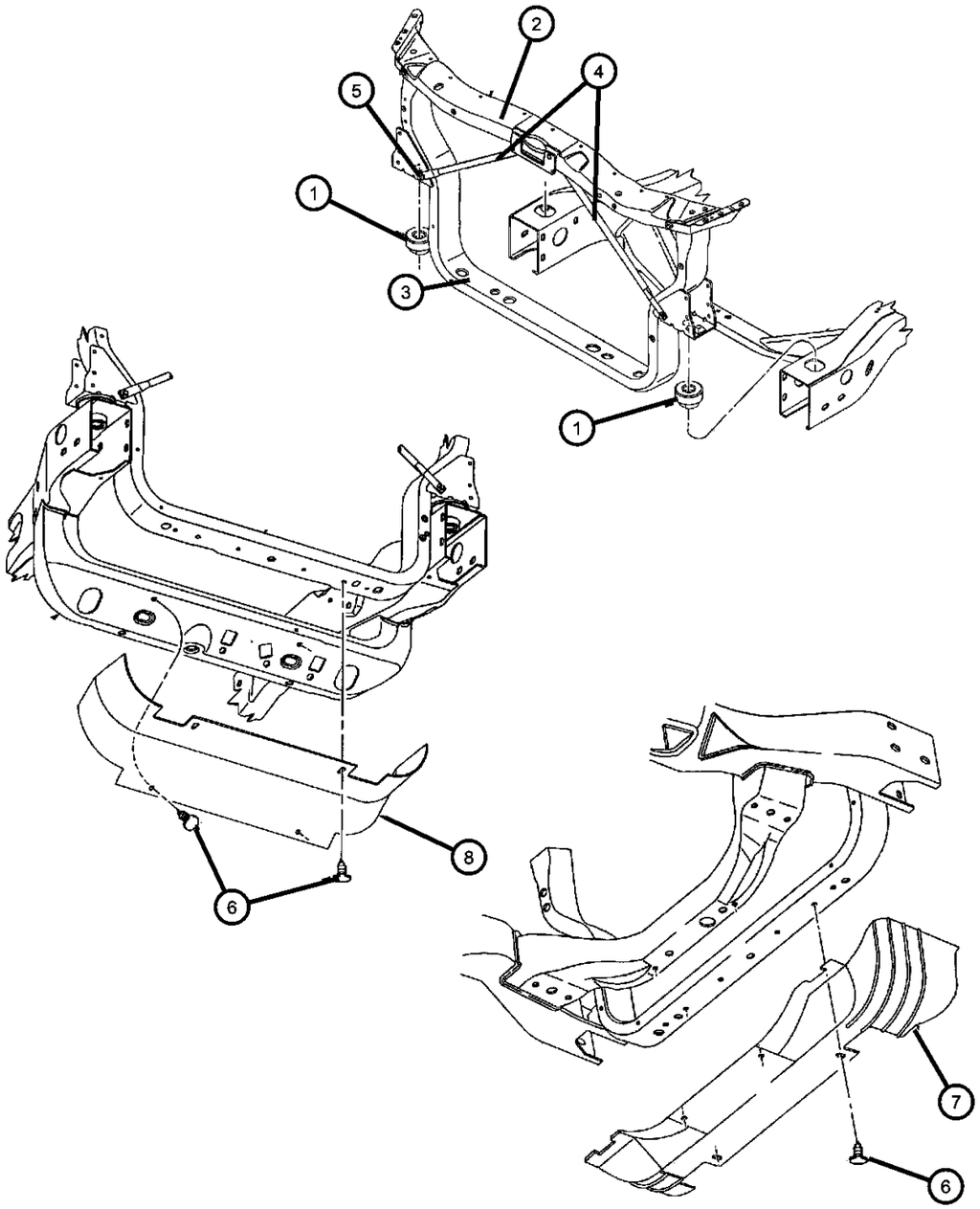

ITEM	PART NUMBER	QTY	LINE	SERIES	BODY	ENGINE	TRANS	TRIM	DESCRIPTION
1	55255703AB	2							ISOLATORLower
2	55255721AF	1							CLOSURE, RadiatorUpper
3	55255720AC	1							CLOSURE, RadiatorLower
4	55257304AA	1							BRACE, Radiator Closure Panel
5	06102153AA	2							SCREW, Tapping, M8x20
6	06503221	4							PIN
7									DEFLECTOR, Radiator
	55036568AB	1	1						
	55056075AA	1	5						
8									DEFLECTOR, Radiator
	55036568AB	1	1						
	55056075AA	1	5						
-9	04716585	1	5						DOOR, Fender Side Shield, Bulb Access
-10									COOLER, Auxiliary Oil
	52028779AB	1				EM0, EV0	DG0		
		1				EH0	DG0		

DAKOTA (AN)

SERIES	LINE	BODY	ENGINE	TRANSMISSION
L = Dakota (All)	1 = Dakota 2WD	61 = Regular Cab (112 WB)	EPE = 2.5L 4 Cylinder	DGK = 4 Speed Automatic 42RE
	5 = Dakota 4WD	31 = Club Cab (131 WB)	EHC = 3.9L 6 Cylinder	DGT = 4 Speed Automatic 46RE
		84 = Quad Cab (131 WB)	EML = 5.0L 8 Cylinder	DDC = 5 Speed HD Manual
			EVA = 4.7L Magnum V8	DDK = 5 Speed HD Manual
			EP0 = All 2.5L	DG4 = Multispeed Automatic 45RFE
			EH0 = All 3.9L	DG0 = All Automatic Transmissions
			EM0 = All 5.9L	DBB = All Manual Transmissions
			EV0 = All 4.7L	

Water Pump And Related Parts 2.5L Engine
Figure 7-205

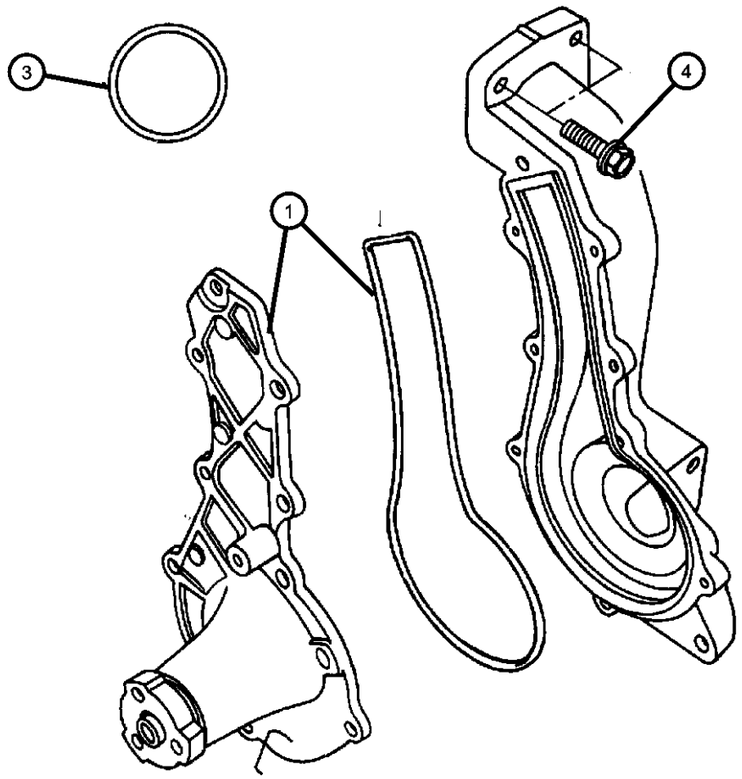

ITEM	PART NUMBER	QTY	LINE	SERIES	BODY	ENGINE	TRANS	TRIM	DESCRIPTION
Note: Sales Code EP0 = 2.5L Gas Engine									
1	04626054AE	1				EP0			PUMP PACKAGE, Water
-2	53007978	1				EP0			TUBE, Water Pump Heater Return
3	53010419AB	1				EP0			GASKET, Water Pump
4	53010419AB	1							SCREW AND WASHER, Hex Head, .312-18x1.12, (NOT SERVICED)
-5	53010419AB	1							SCREW AND WASHER, Hex Head, .312-18x1.75, (NOT SERVICED)

DAKOTA (AN)

SERIES	LINE	BODY	ENGINE	TRANSMISSION
L = Dakota (All)	1 = Dakota 2WD	61 = Regular Cab (112 WB)	EPE = 2.5L 4 Cylinder	DGK = 4 Speed Automatic 42RE
	5 = Dakota 4WD	31 = Club Cab (131 WB)	EHC = 3.9L 6 Cylinder	DGT = 4 Speed Automatic 46RE
		84 = Quad Cab (131 WB)	EML = 5.0L 8 Cylinder	DDC = 5 Speed HD Manual
			EVA = 4.7L Magnum V8	DDK = 5 Speed HD Manual
			EP0 = All 2.5L	DG4 = Multispeed Automatic 45RFE
			EH0 = All 3.9L	DG0 = All Automatic Transmissions
			EM0 = All 5.9L	DBB = All Manual Transmissions
			EV0 = All 4.7L	

Water Pump And Related Parts, 4.7L Engine
Figure 7-207

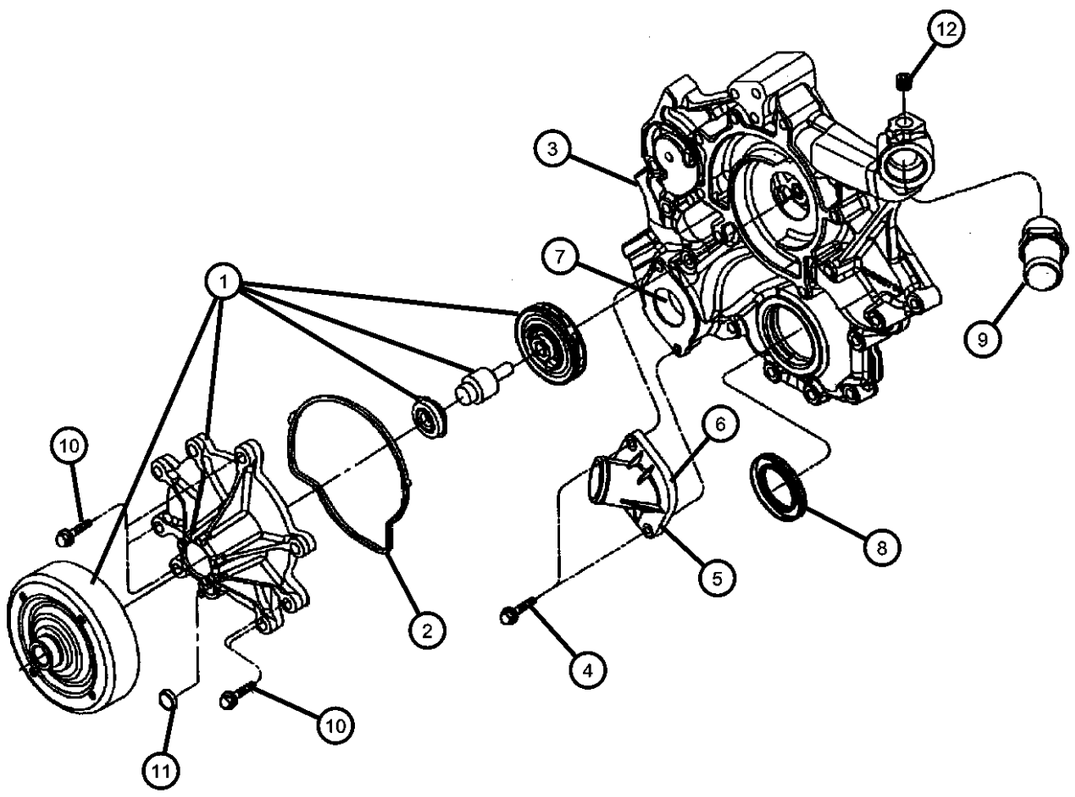

ITEM	PART NUMBER	QTY	LINE	SERIES	BODY	ENGINE	TRANS	TRIM	DESCRIPTION
1	53020873AC	1				EV0			PUMP, Water
2	53020865	1				EV0			GASKET, Water Pump
3	06035854	2				EV0			FITTING, Y-Style
4	06505502AA	2				EV0			SCREW
5	53020887AB	1				EV0			HOUSING, Thermostat
6	53020887AB	1							GASKET, Thermostat, (NOT SERVICED)
7	52079476AB	1				EV0			THERMOSTAT
8	53021313AA	1				EV0			SEAL, Crankshaft Oil, Front
9	53021313AA	1							PIPE FITTING, Chain Case Cover, .375-18x2, 06035961AA, (NOT SERVICED)
10	53021313AA	1							SCREW, M6x1x25, (NOT SERVICED)
11	53021313AA	1							PLUG, (NOT SERVICED)
12	53021313AA	1							PLUG, (NOT SERVICED)

DAKOTA (AN)

SERIES	LINE	BODY	ENGINE	TRANSMISSION
L = Dakota (All)	1 = Dakota 2WD	61 = Regular Cab (112 WB)	EPE = 2.5L 4 Cylinder	DGK = 4 Speed Automatic 42RE
	5 = Dakota 4WD	31 = Club Cab (131 WB)	EHC = 3.9L 6 Cylinder	DGT = 4 Speed Automatic 46RE
		84 = Quad Cab (131 WB)	EML = 5.0L 8 Cylinder	DDC = 5 Speed HD Manual
			EVA = 4.7L Magnum V8	DDK = 5 Speed HD Manual
			EP0 = All 2.5L	DG4 = Multispeed Automatic 45RFE
			EH0 = All 3.9L	DG0 = All Automatic Transmissions
			EM0 = All 5.9L	DBB = All Manual Transmissions
			EV0 = All 4.7L	

Water Pump And Related Parts 3.9L, 5.9L Engine
Figure 7-210

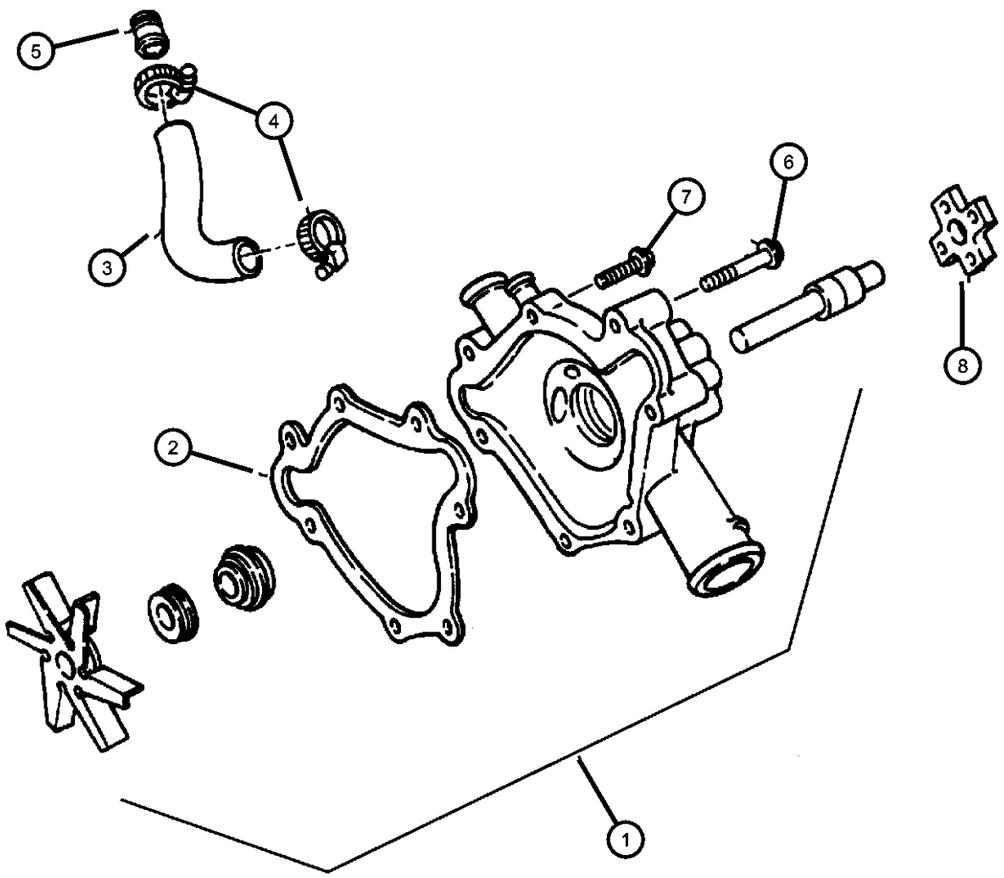

ITEM	PART NUMBER	QTY	LINE	SERIES	BODY	ENGINE	TRANS	TRIM	DESCRIPTION
Note: Sales Code EH0 = 3.9L Gas Engine									
Note: Sales Code EM0 = 5.9L Gas Engine									
Parts With Separate Call Outs Not Serviced in Package									
1									PUMP, Water
	53021018AD	1				EM0			
		1				EH0			
2	04483757	1				EH0, EM0			GASKET, Water Pump
3	53008654	1				EH0, EM0			HOSE, Water Pump Bypass
4	06032277	1				EH0, EM0, EV0			CLAMP, Radiator
5	53020185	1				EM0			NIPPLE, By-Pass
6	06034279	2				EH0, EM0			SCREW AND WASHER, Hex Head Lock, .375-16x1.75
7	06034076	4				EH0, EM0			SCREW AND WASHER, Hex Head Lock, .375-16x4.45
8	06034076	4							HUB, Water Pump Pulley, Serviced w/Pump, (NOT SERVICED)
-9	55036160	1				EH0, EM0			TUBE, Water Pump Inlet
-10	04740906	1				EH0, EM0			O RING, Tube Assy, Heater Return

DAKOTA (AN)

SERIES	LINE	BODY	ENGINE	TRANSMISSION
L = Dakota (All)	1 = Dakota 2WD	61 = Regular Cab (112 WB)	EPE = 2.5L 4 Cylinder	DGK = 4 Speed Automatic 42RE
	5 = Dakota 4WD	31 = Club Cab (131 WB)	EHC = 3.9L 6 Cylinder	DGT = 4 Speed Automatic 46RE
		84 = Quad Cab (131 WB)	EML = 5.0L 8 Cylinder	DDC = 5 Speed HD Manual
			EVA = 4.7L Magnum V8	DDK = 5 Speed HD Manual
			EP0 = All 2.5L	DG4 = Multispeed Automatic 45RFE
			EH0 = All 3.9L	DG0 = All Automatic Transmissions
			EM0 = All 5.9L	DBB = All Manual Transmissions
			EV0 = All 4.7L	

Coolant Tank
Figure 7-305

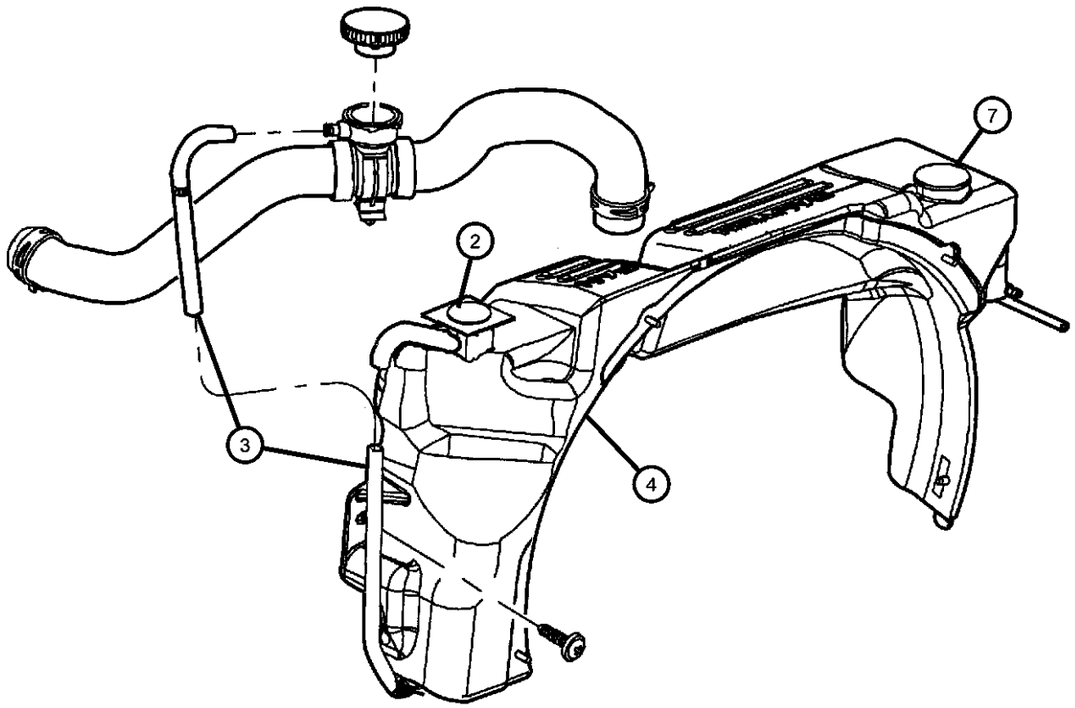

ITEM	PART NUMBER	QTY	LINE	SERIES	BODY	ENGINE	TRANS	TRIM	DESCRIPTION
Note: Sales Code EP0 = 2.5L Gas Engine									
Note: Sales Code EH0 = 3.9L Gas Engine									
Note: Sales Code EV0 = 4.7L Gas Engine									
Note: Sales Code EM0 = 5.9L Gas Engine									
-1									INDICATOR
	52028604	1				EH0			
		1				EM0, EP0, EV0			
2									CAP, Coolant Reserve Tank
	04682828	1				EH0			
		1				EM0, EP0, EV0			
3									HOSE, Overflow, Roll Stock
	04266423	1				EH0			
		1				EM0, EP0, EV0			
4									SHROUD MODULE, Fan
	05015532AB	1				EH0			
	05015534AB	1				EM0, EP0, EV0			
-5									GROMMET, Washer Reservoir
	05013755AA	1				EH0			
		1				EM0, EP0, EV0			
-6									GROMMET, Windshield Washer Pump
	05011809AA	1				EH0			
		1				EM0, EP0, EV0			
7									CAP, Washer Reservoir
	55077261AA	1				EH0			
		1				EM0, EP0, EV0			
-8									SENSOR, Washer Fluid Level
	55077351AA	1				EH0			
		1				EM0, EP0, EV0			
-9									PUMP, Washer, Windshield

DAKOTA (AN)

SERIES	LINE	BODY	ENGINE	TRANSMISSION
L = Dakota (All)	1 = Dakota 2WD 5 = Dakota 4WD	61 = Regular Cab (112 WB) 31 = Club Cab (131 WB) 84 = Quad Cab (131 WB)	EPE = 2.5L 4 Cylinder EHC = 3.9L 6 Cylinder EML = 5.0L 8 Cylinder EVA = 4.7L Magnum V8 EP0 = All 2.5L EH0 = All 3.9L EM0 = All 5.9L EV0 = All 4.7L	DGK = 4 Speed Automatic 42RE DGT = 4 Speed Automatic 46RE DDC = 5 Speed HD Manual DDK = 5 Speed HD Manual DG4 = Multispeed Automatic 45RFE DG0 = All Automatic Transmissions DBB = All Manual Transmissions

Coolant Tank
Figure 7-305

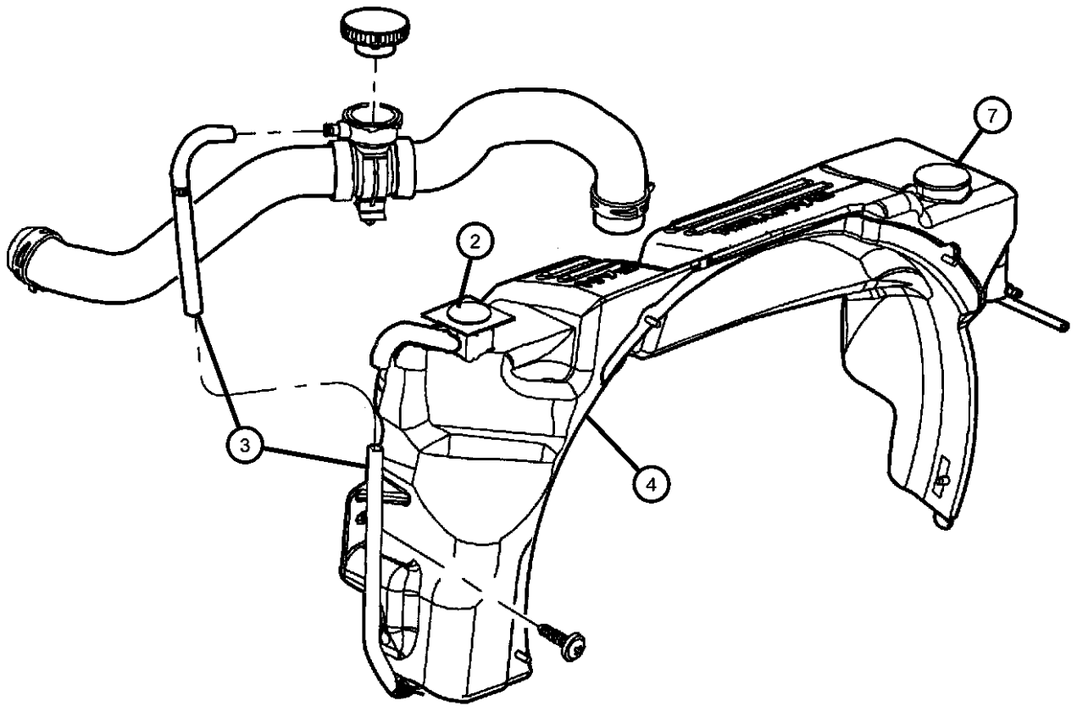

ITEM	PART NUMBER	QTY	LINE	SERIES	BODY	ENGINE	TRANS	TRIM	DESCRIPTION
	55077301AB	1				EH0			
		1				EM0, EP0, EV0			

DAKOTA (AN)

SERIES	LINE	BODY	ENGINE	TRANSMISSION
L = Dakota (All)	1 = Dakota 2WD	61 = Regular Cab (112 WB)	EPE = 2.5L 4 Cylinder	DGK = 4 Speed Automatic 42RE
	5 = Dakota 4WD	31 = Club Cab (131 WB)	EHC = 3.9L 6 Cylinder	DGT = 4 Speed Automatic 46RE
		84 = Quad Cab (131 WB)	EML = 5.0L 8 Cylinder	DDC = 5 Speed HD Manual
			EVA = 4.7L Magnum V8	DDK = 5 Speed HD Manual
			EP0 = All 2.5L	DG4 = Multispeed Automatic 45RFE
			EH0 = All 3.9L	DG0 = All Automatic Transmissions
			EM0 = All 5.9L	DBB = All Manual Transmissions
			EV0 = All 4.7L	

Drive Pulleys 2.5L Engine
Figure 7-405

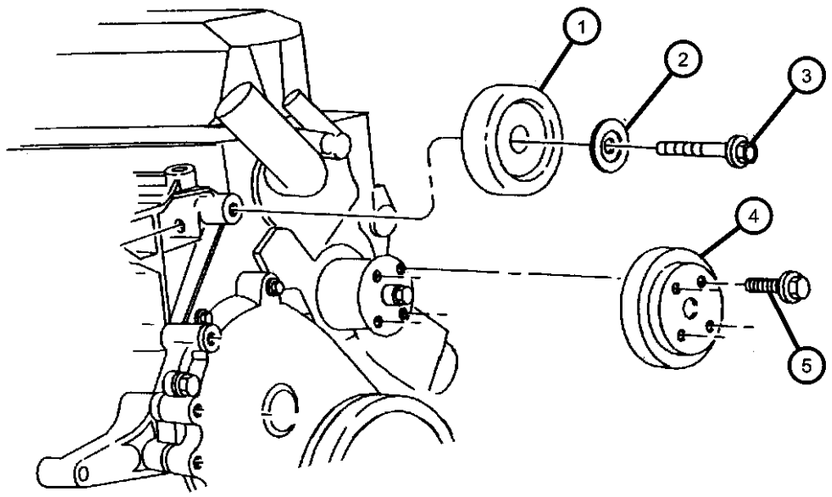

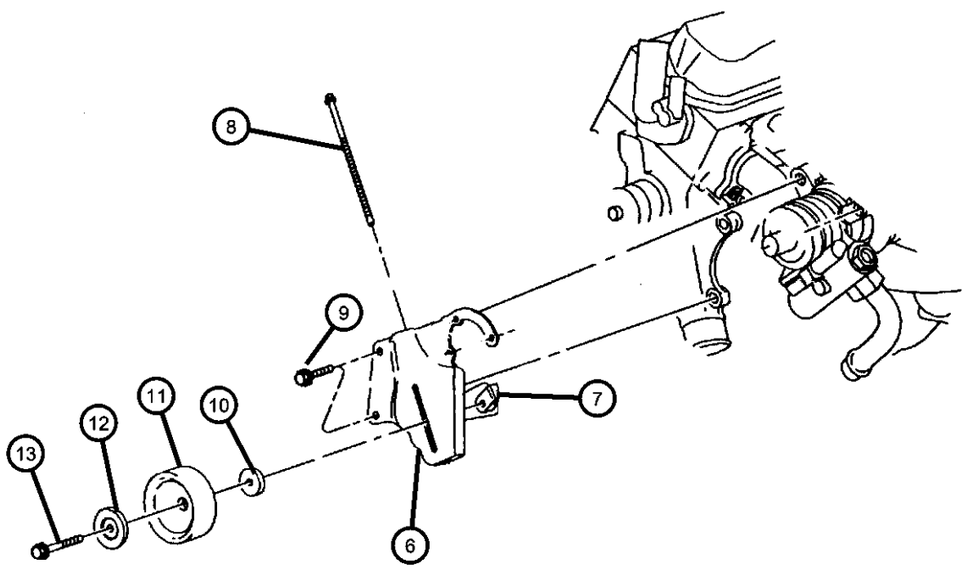

ITEM	PART NUMBER	QTY	LINE	SERIES	BODY	ENGINE	TRANS	TRIM	DESCRIPTION
Note: Sales Code EP0 = 2.5L Gas Engine									
1	53010230	1				EP0			PULLEY, Idler
2	33002201	1				EP0			BUSHING, Idler Pulley
3	06504239	1				EP0			SCREW AND WASHER, M10x1.5x40
4	53007154	1				EP0			PULLEY, Water Pump
5	06035377	4				EP0			SCREW AND WASHER, Hex Head, .312-24x.687
6	53010148	1				EP0			BRACKET, Tensioner
7	53010149	1				EP0			COLLAR, Tensioner Adjustment
8	06503198	1				EP0			BOLT
9	06505030AA	2							SCREW
10	06503230	1				EP0			SPACER, Belt Tensioner
11	04792112	1				EP0			PULLEY, Idler
12	33002201	1				EP0			BUSHING, Idler Pulley
13	34202029	1				EP0			BOLT, Hex Flange Head, M10x1.50x50

DAKOTA (AN)

SERIES	LINE	BODY	ENGINE	TRANSMISSION
L = Dakota (All)	1 = Dakota 2WD	61 = Regular Cab (112 WB)	EPE = 2.5L 4 Cylinder	DGK = 4 Speed Automatic 42RE
	5 = Dakota 4WD	31 = Club Cab (131 WB)	EHC = 3.9L 6 Cylinder	DGT = 4 Speed Automatic 46RE
		84 = Quad Cab (131 WB)	EML = 5.0L 8 Cylinder	DDC = 5 Speed HD Manual
			EVA = 4.7L Magnum V8	DDK = 5 Speed HD Manual
			EP0 = All 2.5L	DG4 = Multispeed Automatic 45RFE
			EH0 = All 3.9L	DG0 = All Automatic Transmissions
			EM0 = All 5.9L	DBB = All Manual Transmissions
			EV0 = All 4.7L	

Drive Pulleys, 4.7L Engine
Figure 7-407

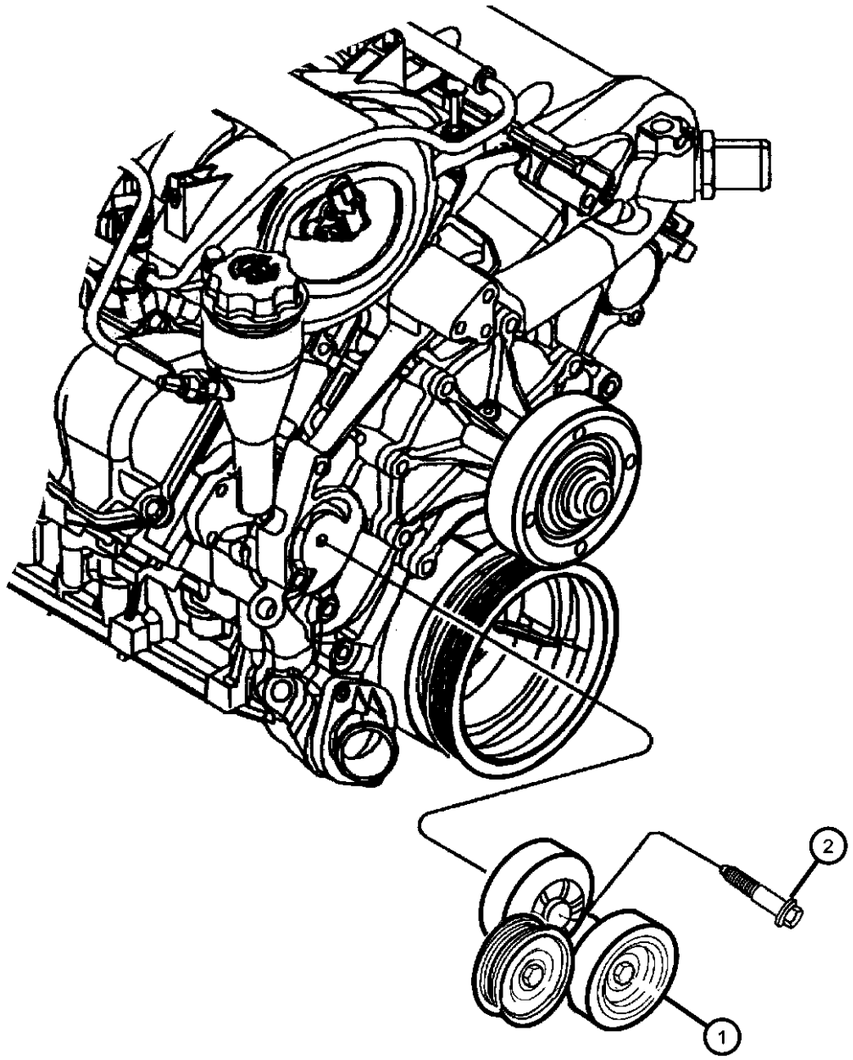

ITEM	PART NUMBER	QTY	LINE	SERIES	BODY	ENGINE	TRANS	TRIM	DESCRIPTION
1	53030958	1				EV0			TENSIONER, Alternator Belt
2	06504930AA	1				EV0			SCREW AND WASHER, Hex Head, M10x1.5x70

DAKOTA (AN)

SERIES	LINE	BODY	ENGINE	TRANSMISSION
L = Dakota (All)	1 = Dakota 2WD	61 = Regular Cab (112 WB)	EPE = 2.5L 4 Cylinder	DGK = 4 Speed Automatic 42RE
	5 = Dakota 4WD	31 = Club Cab (131 WB)	EHC = 3.9L 6 Cylinder	DGT = 4 Speed Automatic 46RE
		84 = Quad Cab (131 WB)	EML = 5.0L 8 Cylinder	DDC = 5 Speed HD Manual
			EVA = 4.7L Magnum V8	DDK = 5 Speed HD Manual
			EP0 = All 2.5L	DG4 = Multispeed Automatic 45RFE
			EH0 = All 3.9L	DG0 = All Automatic Transmissions
			EM0 = All 5.9L	DBB = All Manual Transmissions
			EV0 = All 4.7L	

Drive Pulleys 3.9L, 5.9L Engine
Figure 7-410

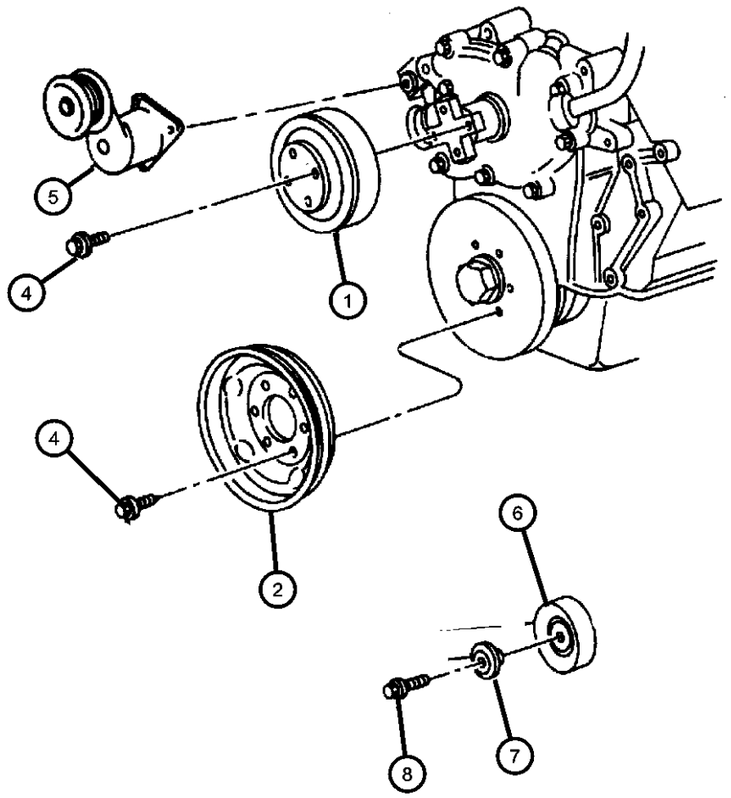

ITEM	PART NUMBER	QTY	LINE	SERIES	BODY	ENGINE	TRANS	TRIM	DESCRIPTION
Note: Sales Code EH0 = 3.9L Gas Engine									
Note: Sales Code EM0 = 5.9L Gas Engine									
1	06504930AA	1							PULLEY, Water Pump, Service with Pump, (NOT SERVICED)
2	53010222	1				EH0			PULLEY, Crankshaft
-3	53021284AA	1				EM0			DAMPER, Crankshaft
4	06022225	4				EH0, EM0, EV0			SCREW AND WASHER, Hex Head, .312-18x.75
5	53010158AB	1				EH0, EM0			TENSIONER, Belt
6	53009508	1				EH0, EM0			PULLEY, Idler
7	33002201	1				EH0, EM0			BUSHING, Idler Pulley
8	06035838	1				EH0, EM0			BOLT

DAKOTA (AN)

SERIES	LINE	BODY	ENGINE	TRANSMISSION
L = Dakota (All)	1 = Dakota 2WD	61 = Regular Cab (112 WB)	EPE = 2.5L 4 Cylinder	DGK = 4 Speed Automatic 42RE
	5 = Dakota 4WD	31 = Club Cab (131 WB)	EHC = 3.9L 6 Cylinder	DGT = 4 Speed Automatic 46RE
		84 = Quad Cab (131 WB)	EML = 5.0L 8 Cylinder	DDC = 5 Speed HD Manual
			EVA = 4.7L Magnum V8	DDK = 5 Speed HD Manual
			EP0 = All 2.5L	DG4 = Multispeed Automatic 45RFE
			EH0 = All 3.9L	DG0 = All Automatic Transmissions
			EM0 = All 5.9L	DBB = All Manual Transmissions
			EV0 = All 4.7L	

AR = use ase required - = Non illustrrated part

Drive Belts 2.5L Engine
Figure 7-507

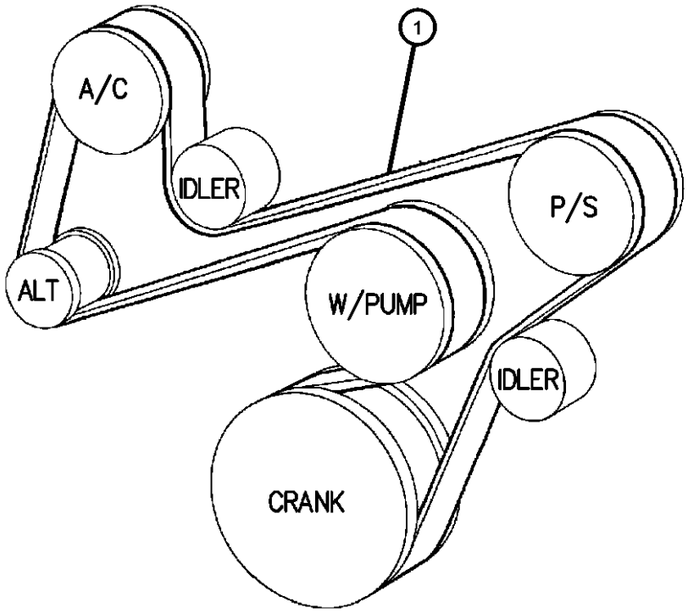

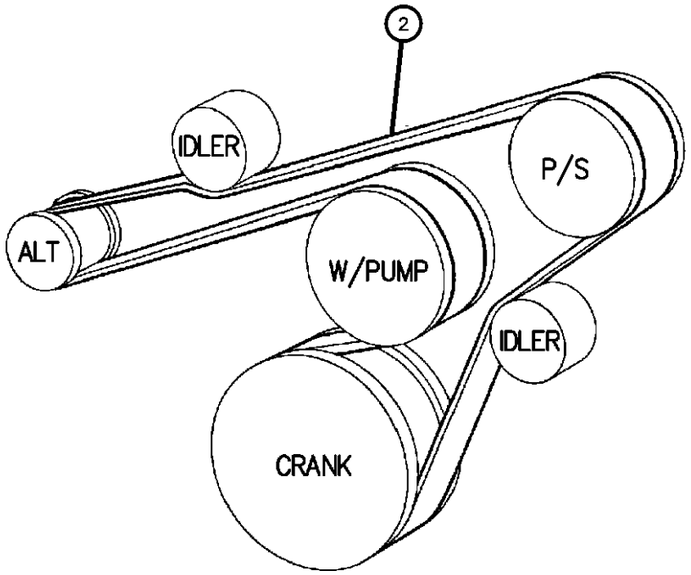

ITEM	PART NUMBER	QTY	LINE	SERIES	BODY	ENGINE	TRANS	TRIM	DESCRIPTION
Note: Sales Code EP0 = 2.5L Gas Engine									
1	04854259	1				EP0			BELT, Accessory Drive, with Air Conditioning
2	04854258	1				EP0			BELT, Accessory Drive, without Air Conditioning
-3	53010298	1				EP0			LABEL, Belt Routing

- ---- ---

DAKOTA (AN)

SERIES	LINE	BODY	ENGINE	TRANSMISSION
L = Dakota (All)	1 = Dakota 2WD	61 = Regular Cab (112 WB)	EPE = 2.5L 4 Cylinder	DGK = 4 Speed Automatic 42RE
	5 = Dakota 4WD	31 = Club Cab (131 WB)	EHC = 3.9L 6 Cylinder	DGT = 4 Speed Automatic 46RE
		84 = Quad Cab (131 WB)	EML = 5.0L 8 Cylinder	DDC = 5 Speed HD Manual
			EVA = 4.7L Magnum V8	DDK = 5 Speed HD Manual
			EP0 = All 2.5L	DG4 = Multispeed Automatic 45RFE
			EH0 = All 3.9L	DG0 = All Automatic Transmissions
			EM0 = All 5.9L	DBB = All Manual Transmissions
			EV0 = All 4.7L	

Drive Belts 3.9L, 4.7L, 5.9L Engine
Figure 7-510

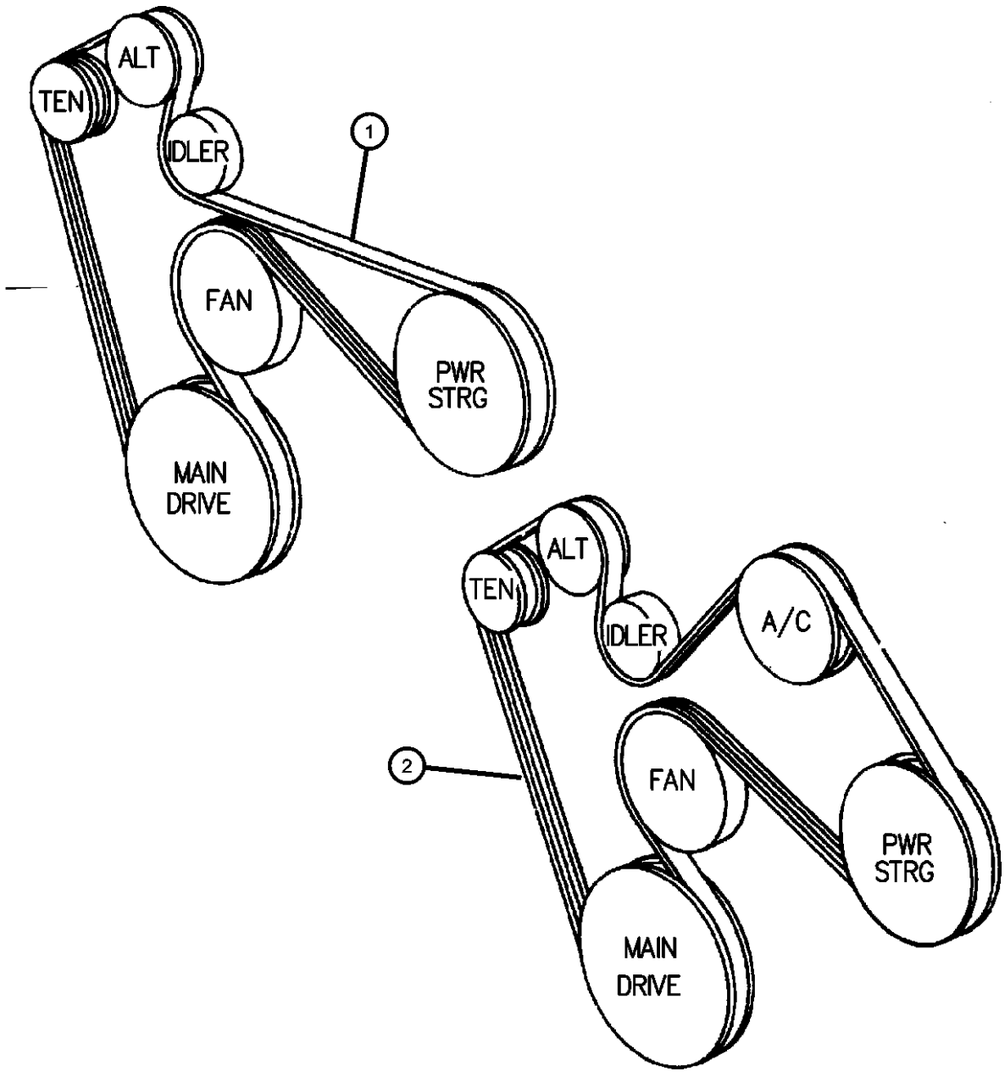

ITEM	PART NUMBER	QTY	LINE	SERIES	BODY	ENGINE	TRANS	TRIM	DESCRIPTION
Note: Sales Code EH0 = 3.9L Gas Engine									
Note: Sales Code EL0 = 5.2L Gas Engine									
Note: Sales Code EM0 = 5.9L Gas Engine									
1	53032380AC	1				EV0			BELT, Accessory Drive, with Air Conditioning
2									BELT, Accessory Drive
	53010303	1				EH0, EM0			With or Without Air Conditioning
	53032125AD	1				EV0			without Air Conditioning
-3									LABEL, Belt Routing
	53008745	1				EH0, EM0			
	53030960	1				EV0			

DAKOTA (AN)

SERIES	LINE	BODY	ENGINE	TRANSMISSION
L = Dakota (All)	1 = Dakota 2WD	61 = Regular Cab (112 WB)	EPE = 2.5L 4 Cylinder	DGK = 4 Speed Automatic 42RE
	5 = Dakota 4WD	31 = Club Cab (131 WB)	EHC = 3.9L 6 Cylinder	DGT = 4 Speed Automatic 46RE
		84 = Quad Cab (131 WB)	EML = 5.0L 8 Cylinder	DDC = 5 Speed HD Manual
			EVA = 4.7L Magnum V8	DDK = 5 Speed HD Manual
			EP0 = All 2.5L	DG4 = Multispeed Automatic 45RFE
			EH0 = All 3.9L	DG0 = All Automatic Transmissions
			EM0 = All 5.9L	DBB = All Manual Transmissions
			EV0 = All 4.7L	

Oil Cooler Lines
Figure 7-605

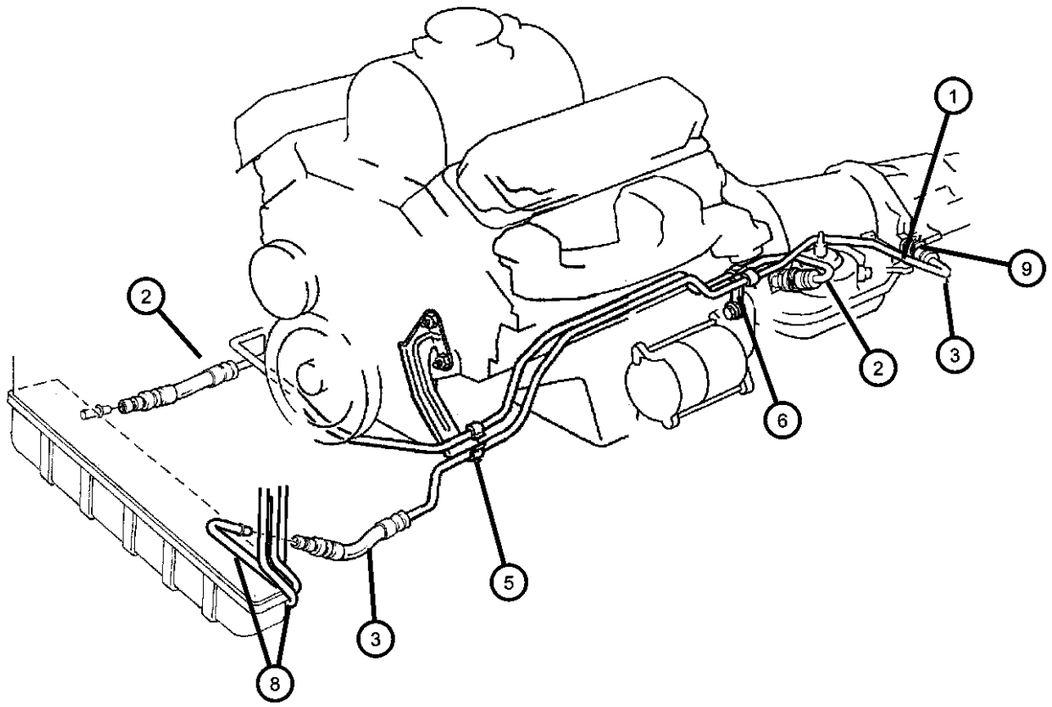

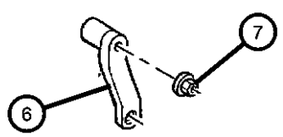

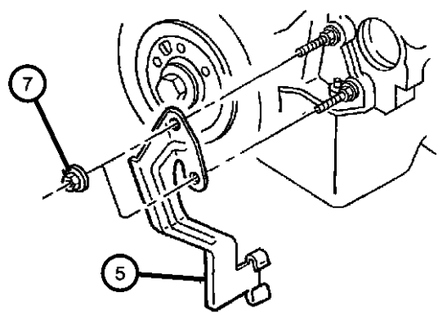

ITEM	PART NUMBER	QTY	LINE	SERIES	BODY	ENGINE	TRANS	TRIM	DESCRIPTION
Note: Sales Code EH0 = 3.9L Gas Engine									
Note: Sales Code EM0 = 5.9L Gas Engine									
1	52028625AC	1					DGT		CONNECTOR, Oil Cooler Line, .375
2									TUBE AND HOSE, Oil Cooler
	52028728AB	1					DG4		Pressure
	52028753AI	1					DGK		Pressure
	52028897AB	1					DGT		Pressure
3									TUBE AND HOSE, Oil Cooler
	52028655AG	1					DGK		Return
	52028730AA	1					DG4		Return
	52028784AE	1					DGT		Return
-4									HOSE AND VALVE, Transmission
	05016739AB	1					DGK		
		1					DGT		
5	52117663AB	1					DGK, DGT		BRACKET, Oil Cooler Tube
6	53006015	1					DGK, DGT		BRACKET, Oil Cooler Tube
7	J4006001	2					DGK, DGT		NUT, Hex Flange, .375-16
8									TUBE, Oil Cooler
	05015415AA	1				EH0	DG0		Lower
		1				EM0, EV0	DG0		Lower
	05015416AA	1				EH0	DG0		Upper
		1				EM0, EV0	DG0		Upper
9									NUT, Transmission Case
	04799433AB	2	5				DG4		
		2	1				DG4		

DAKOTA (AN)

SERIES	LINE	BODY	ENGINE	TRANSMISSION
L = Dakota (All)	1 = Dakota 2WD	61 = Regular Cab (112 WB)	EPE = 2.5L 4 Cylinder	DGK = 4 Speed Automatic 42RE
	5 = Dakota 4WD	31 = Club Cab (131 WB)	EHC = 3.9L 6 Cylinder	DGT = 4 Speed Automatic 46RE
		84 = Quad Cab (131 WB)	EML = 5.0L 8 Cylinder	DDC = 5 Speed HD Manual
			EVA = 4.7L Magnum V8	DDK = 5 Speed HD Manual
			EP0 = All 2.5L	DG4 = Multispeed Automatic 45RFE
			EH0 = All 3.9L	DG0 = All Automatic Transmissions
			EM0 = All 5.9L	DBB = All Manual Transmissions
			EV0 = All 4.7L	

Grille And Related Parts
Figure 7-705

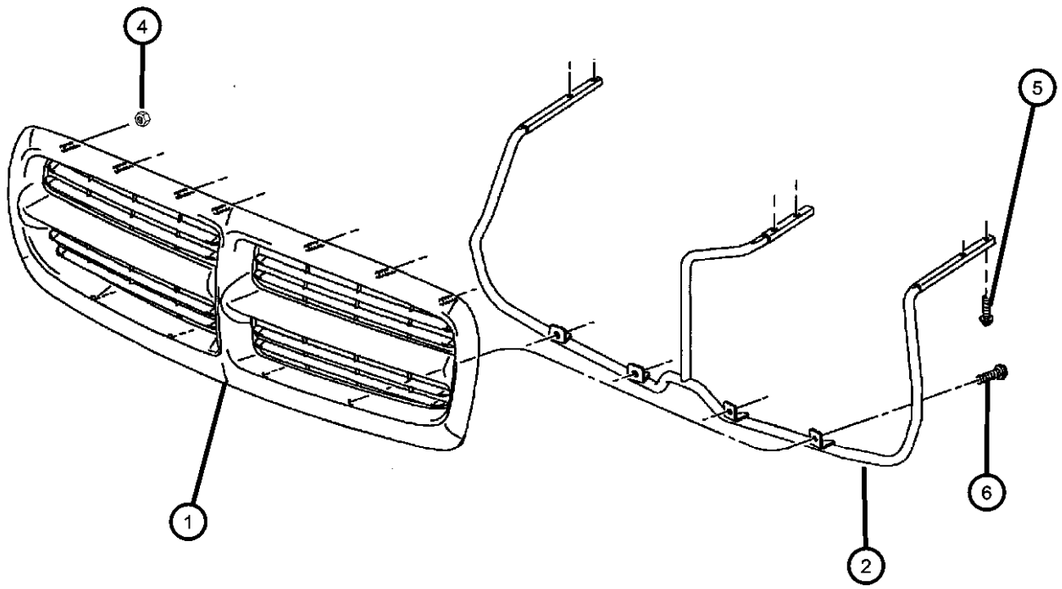

ITEM	PART NUMBER	QTY	LINE	SERIES	BODY	ENGINE	TRANS	TRIM	DESCRIPTION
1									GRILLE, Radiator
	55056092	1							Bright [MFD]
	5EH12DX8	1							[X8] [MFN]
	5EH12GW7	1							[W7] [MFN]
	5EH12PR4	1							[R4] [MFN]
	5EH12WBT	1							[BT] [MFN]
	5EH12WSB	1							[SB] [MFN]
	5EH12ZBJ	1							[BJ] [MFN]
	5EH12ZDR	1							[DR] [MFN]
		1							[DR] [MF9]
2	55055210AC	1							BRACKET, Grille
-3	55036568AB	1	1						DEFLECTOR, RadiatorLower
4	06101443	4							NUT AND WASHER, Hex, M5x.80
5	06504288	6							SCREW AND WASHER, Hex Head
6	06504288	6							SCREW, Hex Flange Head, M5x0.80x20.00, (NOT SERVICED)

DAKOTA (AN)

SERIES	LINE	BODY	ENGINE	TRANSMISSION
L = Dakota (All)	1 = Dakota 2WD	61 = Regular Cab (112 WB)	EPE = 2.5L 4 Cylinder	DGK = 4 Speed Automatic 42RE
	5 = Dakota 4WD	31 = Club Cab (131 WB)	EHC = 3.9L 6 Cylinder	DGT = 4 Speed Automatic 46RE
		84 = Quad Cab (131 WB)	EML = 5.0L 8 Cylinder	DDC = 5 Speed HD Manual
			EVA = 4.7L Magnum V8	DDK = 5 Speed HD Manual
			EP0 = All 2.5L	DG4 = Multispeed Automatic 45RFE
			EH0 = All 3.9L	DG0 = All Automatic Transmissions
			EM0 = All 5.9L	DBB = All Manual Transmissions
			EV0 = All 4.7L	

AR = use ase required - = Non illustrrated part

Group - 8

Electrical

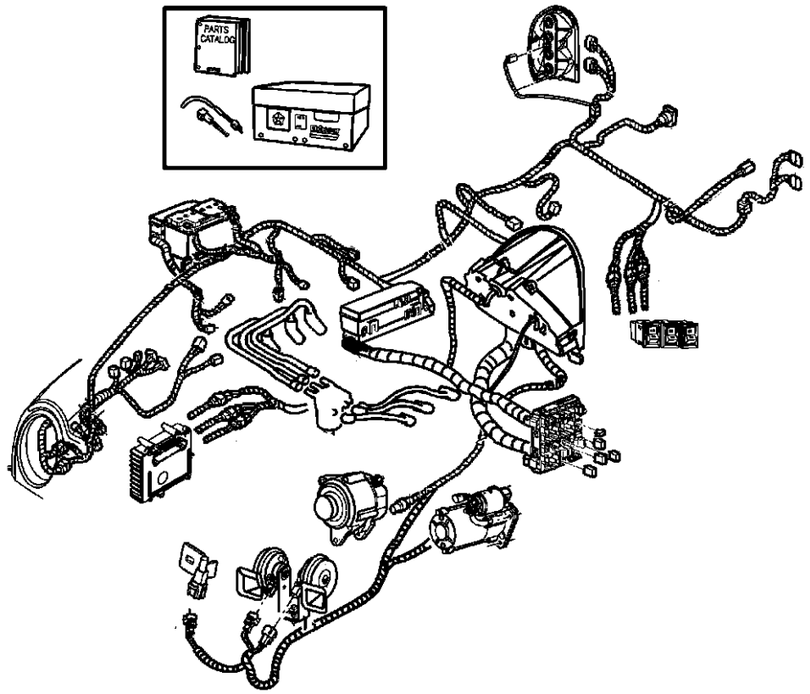

008-100 Starters 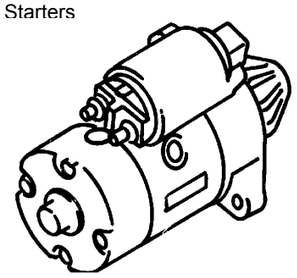	**008-1000** Battery Tray and Cables 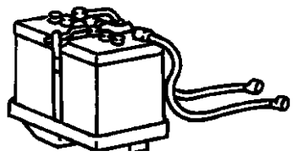	**008-1100** Lamps - Front, Rear and Courtesy 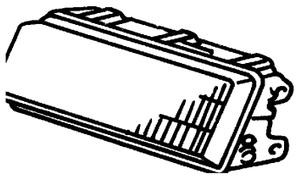	**008-1200** Wiring-Engine & Related Parts 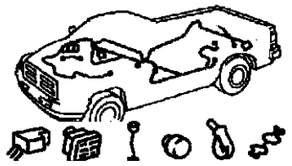
008-1300 Wiring-Headlamp to Dash 	**008-1400** Wiring-Instrument Panel 	**008-1500** Wiring-Body & Accessories 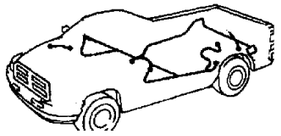	**008-1600** Wiring Repair **WIRING REPAIR PKG.**

008-1900 Spark Plugs-Cables-Coils 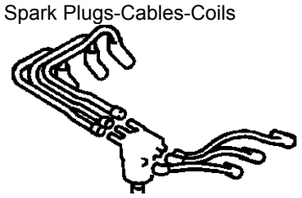	**008-200** Alternators 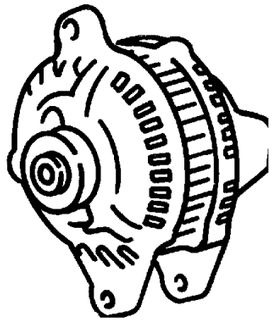	**008-300** Distributor 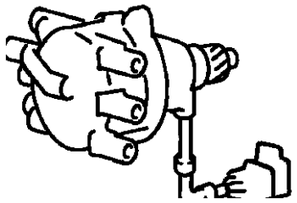	**008-400** Modules 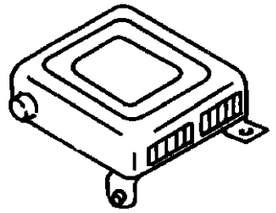
008-500 Relays 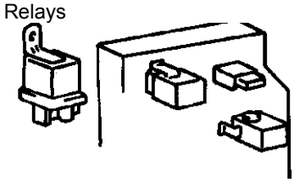	**008-600** Sensors 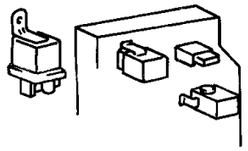	**008-700** Single Board Engine Controllers 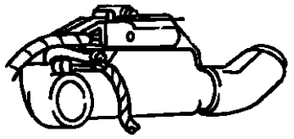	**008-800** Switches 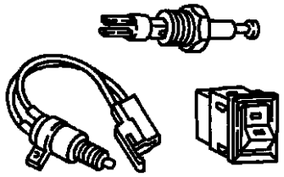
008-900 Horns 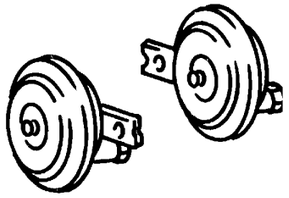			

Group - 8 Electrical

Illustration Title — Group-Fig. No.

Starters
Starter & Mounting ..... Fig. 8 - 106

Alternators
Alternator & Alternator Mounting [EP0] ..... Fig. 8 - 210
Alternator & Alternator Mounting [EH0 & EM0] ..... Fig. 8 - 220
Alternator & Alternator Mounting [EV0] ..... Fig. 8 - 240

Distributor
Distributors ..... Fig. 8 - 306

Modules
Modules ..... Fig. 8 - 405

Relays
Power Distribution Center Relays and Fuses ..... Fig. 8 - 505
Junction Block Relays and Fuses ..... Fig. 8 - 510

Sensors
Sensors [2.5 EP0 Engine] ..... Fig. 8 - 605
Sensors [4.7 EV0 Engine] ..... Fig. 8 - 610
Sensors [3.9 EH0 and 5.9 EM0 Engines] ..... Fig. 8 - 615
Sensors Drivetrain ..... Fig. 8 - 620
Sensors - Body ..... Fig. 8 - 625

Single Board Engine Controllers
Single Board Engine Controllers (JTEC) ..... Fig. 8 - 710

Switches
Switches - Instrument Panel and Console ..... Fig. 8 - 805
Swtiches - Drivetrain ..... Fig. 8 - 810
Switches - Body ..... Fig. 8 - 815

Horns
Horn & Mounting ..... Fig. 8 - 911

Battery Tray and Cables
Battery Tray & Cables ..... Fig. 8 - 1011

Lamps - Front, Rear and Courtesy
Lamp - Front End ..... Fig. 8 - 1131
Lamp - Rear End ..... Fig. 8 - 1141
Lamp - Dome - Courtesy - Reading ..... Fig. 8 - 1151
Bulbs & Sockets ..... Fig. 8 - 1196

Wiring-Engine & Related Parts
Wiring - Engine ..... Fig. 8 - 1211

Wiring-Headlamp to Dash
Wiring - Headlamp / Dash ..... Fig. 8 - 1311

Wiring-Instrument Panel
Wiring - Instrument Panel ..... Fig. 8 - 1411

Wiring-Body & Accessories
Wiring - Body & Accessory ..... Fig. 8 - 1511

Wiring Repair
Wiring Repair Packages ..... Fig. 8 - 1605

Spark Plugs-Cables-Coils
Spark Plugs - Cables - Coils ..... Fig. 8 - 1906

Starter & Mounting
Figure 8-106

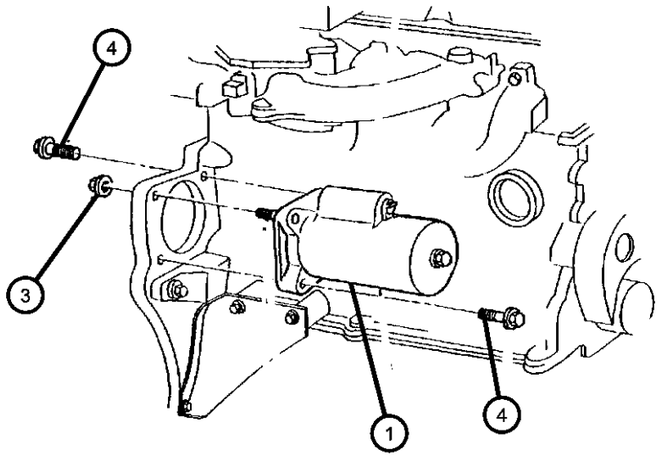

4 CYLINDER

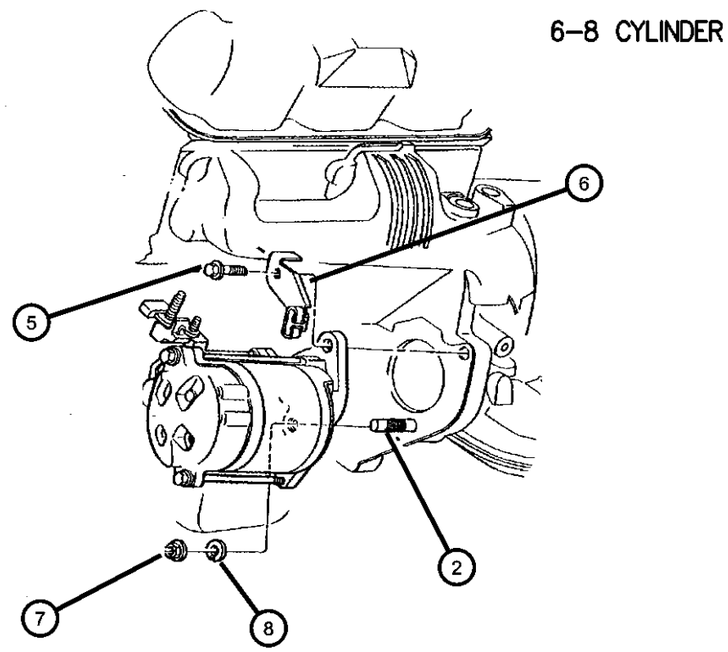

6–8 CYLINDER

ITEM	PART NUMBER	QTY	LINE	SERIES	BODY	ENGINE	TRANS	TRIM	DESCRIPTION
EP0=2.5L Engine EH0=3.9L Engine EV0=4.7L Engine EM0=5.9L Engine DGK=Automatic Transmission 4 Speed DGT=Automatic Transmission 4 Speed DG4=Automatic Transmission Multi-Speed DDC=Manual Transmission Speed (Heavy Duty)									
1									STARTER
	56027702AC	1				EH0, EM0			
		1				EV0	DD0		
	56028715AD	1				EV0	DG0		
	56041013AC	1				EP0			
2									STUD, .437-14/.437-20x2.00
	06035606	1				EH0, EM0			
		1				EV0	DD0		
3									NUT, Hex, .42-20
	00271506	1				EH0, EM0			
		1				EV0	DD0		
4		1							SCREW, Starter Motor, (NOT SERVICED)
5									SCREW AND WASHER, Hex Head, .437-14x1.50
	06035604	1				EV0	DD0		
		1				EH0, EM0			
		2				EV0	DG0		
6	52117663AB	1					DGK, DGT		BRACKET, Oil Cooler Tube
7	52117663AB	1							NUT, Hex Flange Lock, .437-14, (NOT SERVICED)
8	52117663AB	1							WASHER, (NOT SERVICED)

DAKOTA (AN)

SERIES	LINE	BODY	ENGINE	TRANSMISSION
L = Dakota (All)	1 = Dakota 2WD 5 = Dakota 4WD	61 = Regular Cab (112 WB) 31 = Club Cab (131 WB) 84 = Quad Cab (131 WB)	EPE = 2.5L 4 Cylinder EHC = 3.9L 6 Cylinder EML = 5.0L 8 Cylinder EVA = 4.7L Magnum V8 EP0 = All 2.5L EH0 = All 3.9L EM0 = All 5.9L EV0 = All 4.7L	DGK = 4 Speed Automatic 42RE DGT = 4 Speed Automatic 46RE DDC = 5 Speed HD Manual DDK = 5 Speed HD Manual DG4 = Multispeed Automatic 45RFE DG0 = All Automatic Transmissions DBB = All Manual Transmissions

Alternator & Alternator Mounting [EP0]
Figure 8-210

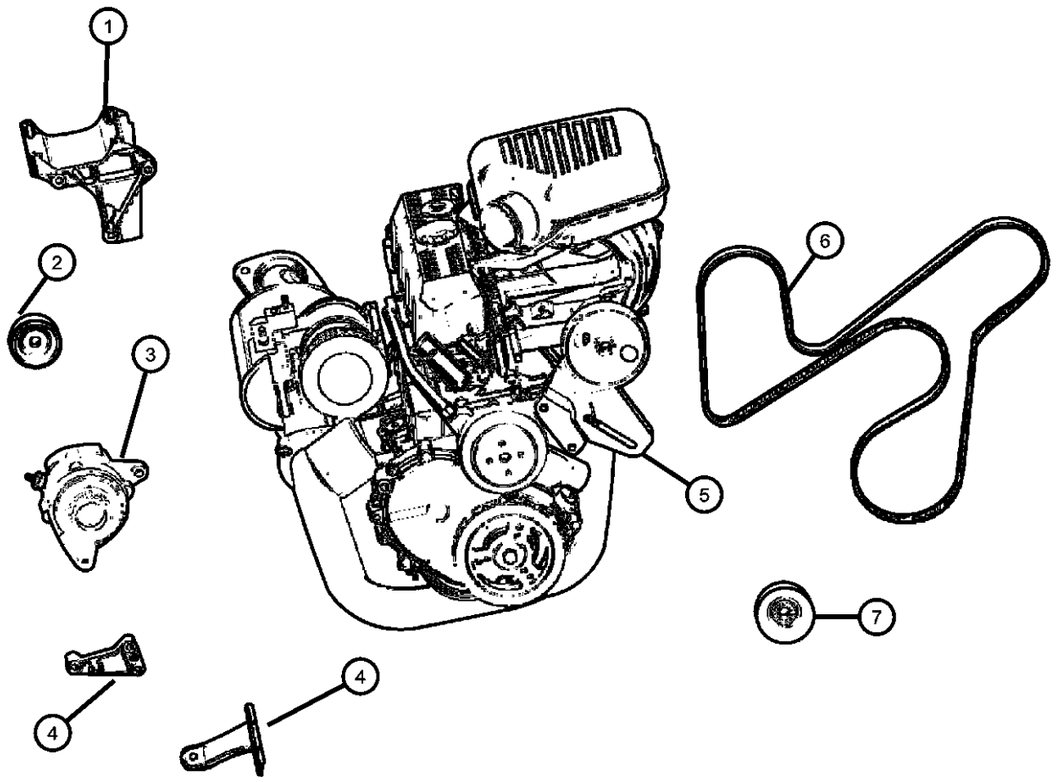

ITEM	PART NUMBER	QTY	LINE	SERIES	BODY	ENGINE	TRANS	TRIM	DESCRIPTION
NOTE:									
Sales Codes:									
[EP0]=2.5L 4 Cylinder Engine									
1	53010207	1				EP0			BRACKET, Alternator And Compressor
2	53010230	1				EP0			PULLEY, Idler
3	56028686AA	1				EP0			ALTERNATOR, 117 AMP
4									BRACKET, Alternator
	53007506	1				EP0			Brace
	53007604	1				EP0			Alternator Mounting Rear
5	53010148	1				EP0			BRACKET, Tensioner
6									BELT, Accessory Drive
	04854258	1				EP0			Without Air Conditioner
	04854259	1				EP0			With Air Conditioner
7	04792112	1				EP0			PULLEY, Idler
-8	06502134	1				EP0			BOLT, Hex Flange Head, M10x1.50x110
-9	06502135	1				EP0			NUT, Hex Flange, M10x1.5
-10	06502136	1				EP0			BOLT, Hex Flange Head, M10x1.50x55
-11	06025063	3				EP0			SCREW AND WASHER, .375-16x1.125
-12	06502144	1				EP0			SCREW AND WASHER, Hex Head, M10x1.5x25
-13	06033949	2				EP0			BOLT, Hex Head, .375-16x2.50

DAKOTA (AN)

SERIES	LINE	BODY	ENGINE	TRANSMISSION
L = Dakota (All)	1 = Dakota 2WD	61 = Regular Cab (112 WB)	EPE = 2.5L 4 Cylinder	DGK = 4 Speed Automatic 42RE
	5 = Dakota 4WD	31 = Club Cab (131 WB)	EHC = 3.9L 6 Cylinder	DGT = 4 Speed Automatic 46RE
		84 = Quad Cab (131 WB)	EML = 5.0L 8 Cylinder	DDC = 5 Speed HD Manual
			EVA = 4.7L Magnum V8	DDK = 5 Speed HD Manual
			EP0 = All 2.5L	DG4 = Multispeed Automatic 45RFE
			EH0 = All 3.9L	DG0 = All Automatic Transmissions
			EM0 = All 5.9L	DBB = All Manual Transmissions
			EV0 = All 4.7L	

Alternator & Alternator Mounting [EH0 & EM0]
Figure 8-220

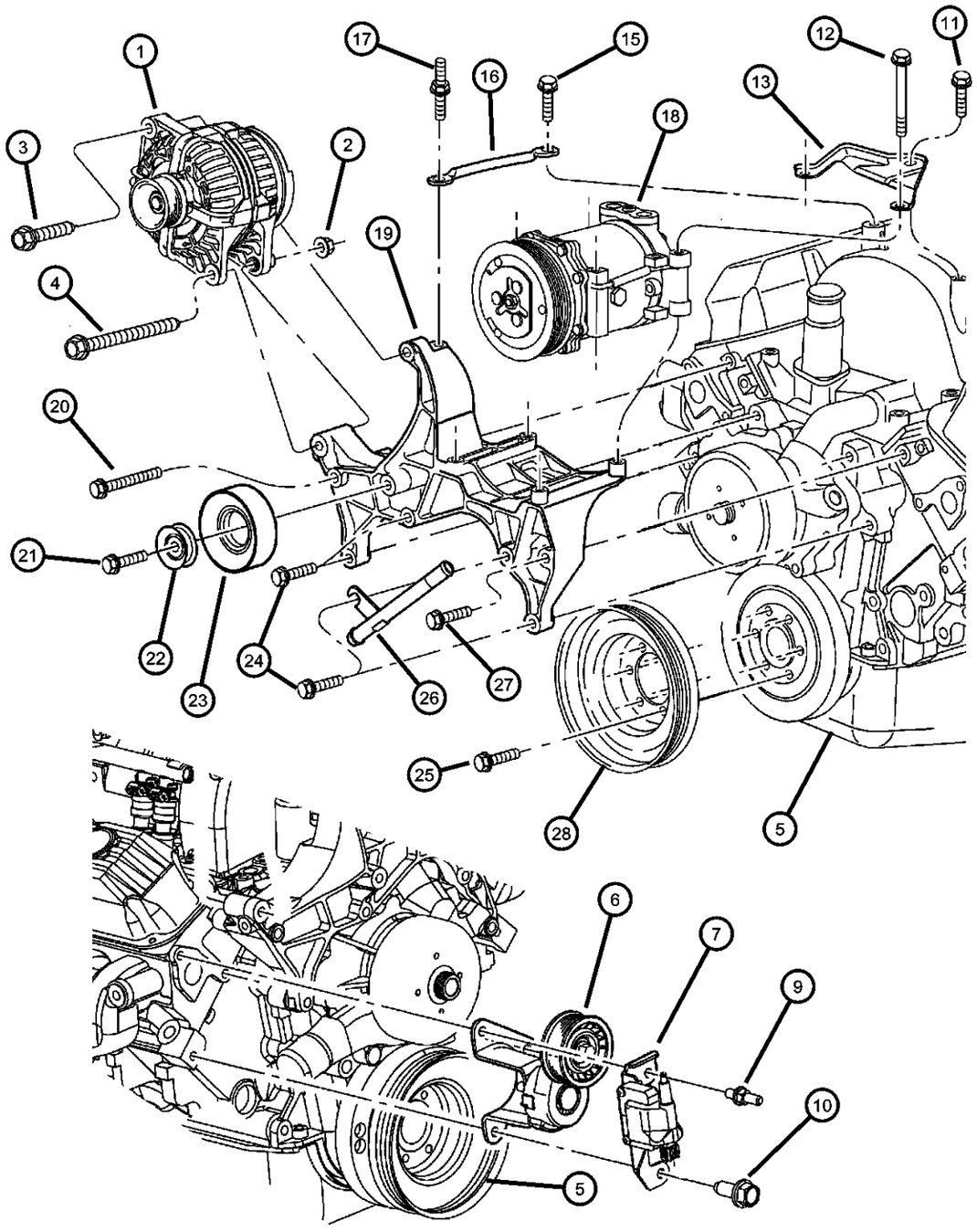

ITEM	PART NUMBER	QTY	LINE	SERIES	BODY	ENGINE	TRANS	TRIM	DESCRIPTION
NOTE: Sales Codes: [BAU]=117 Amp Alternator [BAZ]=136 Amp Alternator [EH0]=All 3.9L V-6 Engines [EM0]=5.9L V-8 Engines									
1									ALTERNATOR
	56029913AA	1				EH0, EM0			With [BAU]
	56030914AB	1				EH0, EM0			With [BAZ]
2	56030914AB	1							NUT, .375-16, (NOT SERVICED),
3	06034249	1				EH0, EM0			SCREW AND WASHER
4	06034247	1				EH0, EM0			BOLT, Hex Head, .375-16x.25
5	06034247	1							ENGINE, Complete, See Engine Group, (NOT SERVICED)
6	53010158AB	1				EH0, EM0			TENSIONER, Belt
7	56028172AB	1				EH0, EM0			COIL, Ignition
-8	56026891	1				EH0, EM0			BRACKET, Ignition Coil
9	06036106AA	1				EH0, EM0			STUD
10	06036106AA	1							SCREW, .375-16x1.00, (NOT SERVICED)
11	06036106AA	1							SCREW, [.312-18X.75], (NOT SERVICED)
12	06034789	4				EH0, EM0			SCREW AND WASHER, Hex Head Coned Lock Washe, .312-18x3.75
13	53008746	1				EH0, EM0			BRACE, Alternator
-14	53010252	1				EH0, EM0			BRACE, A/C Compressor
15	53010252	1							SCREW, .375-16x1.00, (NOT SERVICED)
16	53010252	1							BRACE, (NOT SERVICED)
17	53010252	1							STUD, (NOT SERVICED)
18	55056094AA	1				EH0, EM0			COMPRESSOR, Air Conditioning
19	53008614	1				EH0, EM0			BRACKET, Alternator And Compressor
20	06034247	1				EH0, EM0			BOLT, Hex Head, .375-16x.25
21	06034247	1							SCREW, (NOT SERVICED)
22	33002201	1				EH0, EM0			BUSHING, Idler Pulley
23	53009508	1				EH0, EM0			PULLEY, Idler
24	06034249	1				EH0, EM0			SCREW AND WASHER

DAKOTA (AN)

SERIES	LINE	BODY	ENGINE	TRANSMISSION
L = Dakota (All)	1 = Dakota 2WD 5 = Dakota 4WD	61 = Regular Cab (112 WB) 31 = Club Cab (131 WB) 84 = Quad Cab (131 WB)	EPE = 2.5L 4 Cylinder EHC = 3.9L 6 Cylinder EML = 5.0L 8 Cylinder EVA = 4.7L Magnum V8 EP0 = All 2.5L EH0 = All 3.9L EM0 = All 5.9L EV0 = All 4.7L	DGK = 4 Speed Automatic 42RE DGT = 4 Speed Automatic 46RE DDC = 5 Speed HD Manual DDK = 5 Speed HD Manual DG4 = Multispeed Automatic 45RFE DG0 = All Automatic Transmissions DBB = All Manual Transmissions

Alternator & Alternator Mounting [EH0 & EM0]
Figure 8-220

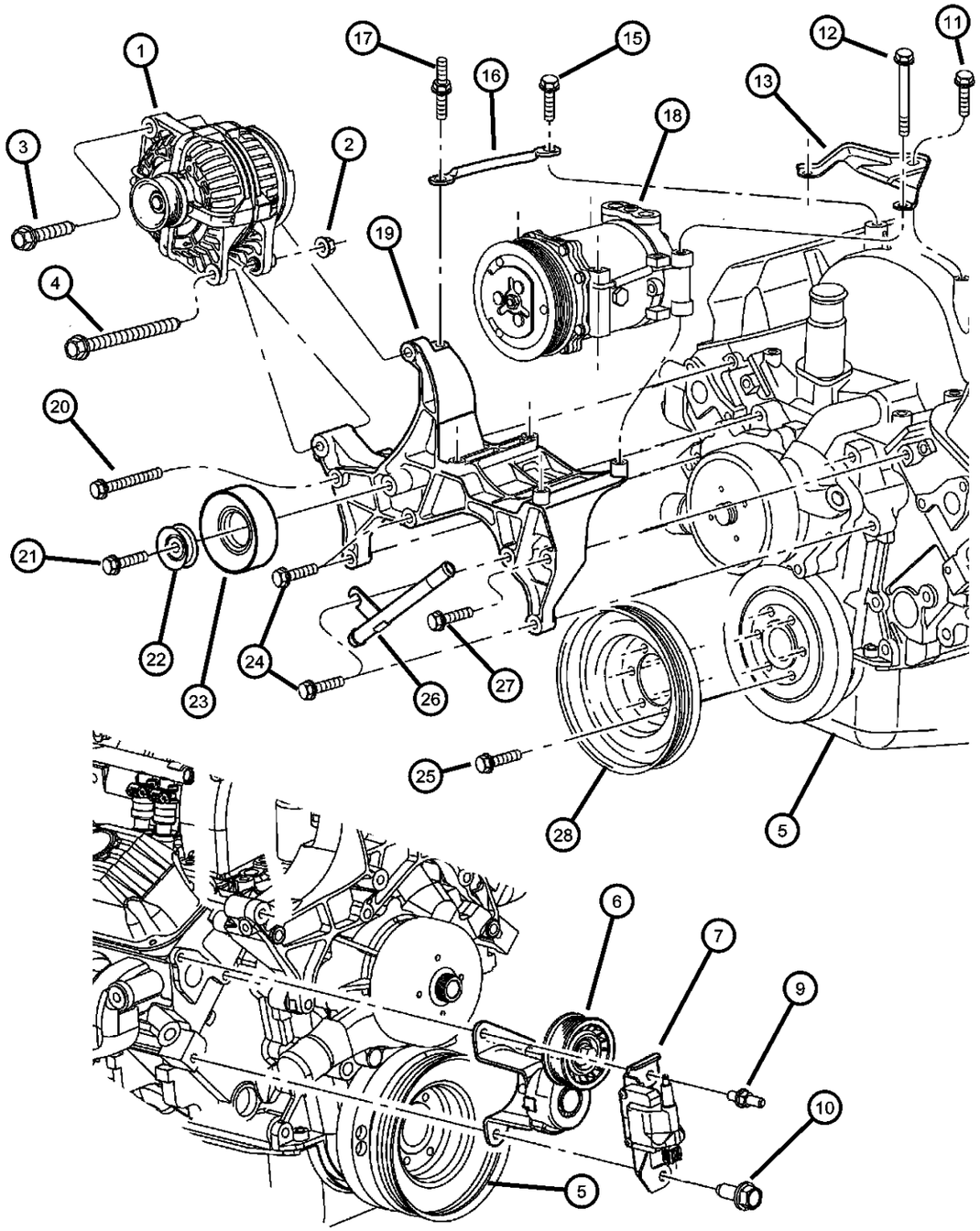

ITEM	PART NUMBER	QTY	LINE	SERIES	BODY	ENGINE	TRANS	TRIM	DESCRIPTION
25	06034256	6				EH0			SCREW AND WASHER, Hex Head, .312-18x.75
26	06034256	6							TUBE, Heater, See Group 7, (NOT SERVICED)
27	06034246	1				EH0, EM0			BOLT, Hex Head, .375-16x.75
28	53010222	1				EH0			PULLEY, Crankshaft

DAKOTA (AN)

SERIES	LINE	BODY	ENGINE	TRANSMISSION
L = Dakota (All)	1 = Dakota 2WD	61 = Regular Cab (112 WB)	EPE = 2.5L 4 Cylinder	DGK = 4 Speed Automatic 42RE
	5 = Dakota 4WD	31 = Club Cab (131 WB)	EHC = 3.9L 6 Cylinder	DGT = 4 Speed Automatic 46RE
		84 = Quad Cab (131 WB)	EML = 5.0L 8 Cylinder	DDC = 5 Speed HD Manual
			EVA = 4.7L Magnum V8	DDK = 5 Speed HD Manual
			EP0 = All 2.5L	DG4 = Multispeed Automatic 45RFE
			EH0 = All 3.9L	DG0 = All Automatic Transmissions
			EM0 = All 5.9L	DBB = All Manual Transmissions
			EV0 = All 4.7L	

Alternator & Alternator Mounting [EV0]
Figure 8-240

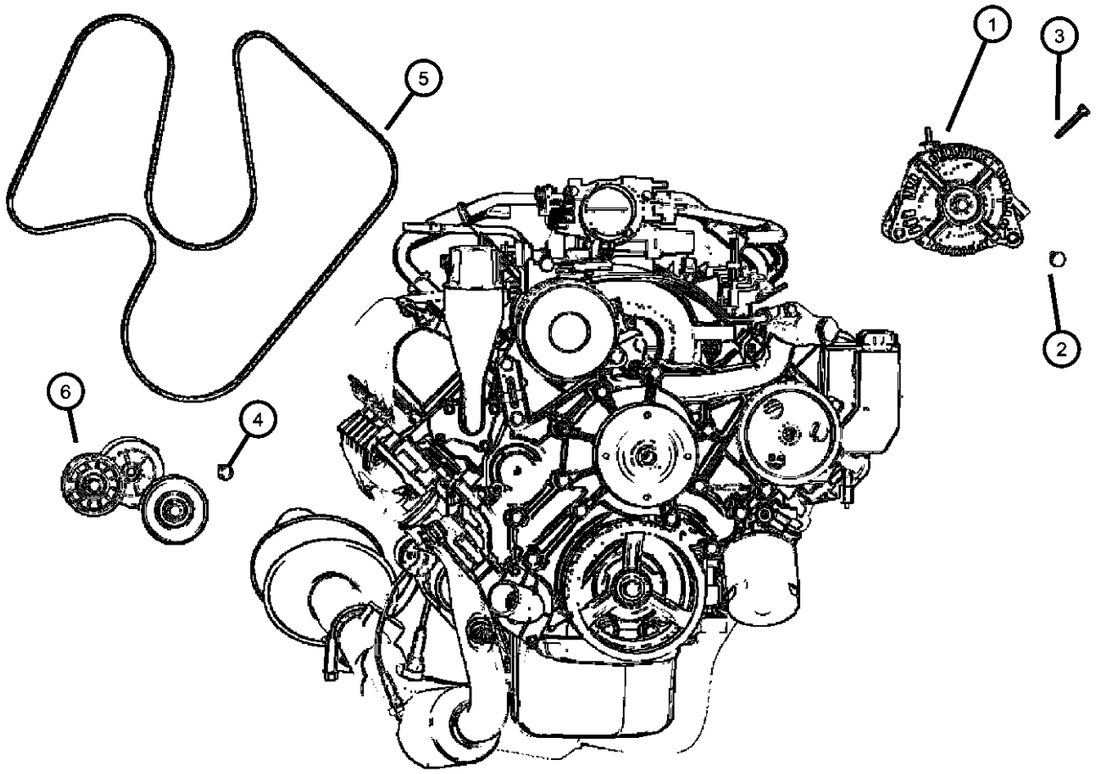

ITEM	PART NUMBER	QTY	LINE	SERIES	BODY	ENGINE	TRANS	TRIM	DESCRIPTION
NOTE:									
Sales Codes:									
[BAU]=117 Amp Alternator									
[BAZ]=136 Amp Alternator									
[EV0]=4.7L V-8 Engine									
1									ALTERNATOR
	56028692AA	1				EV0			With [BAU]
	56041693AB	1				EV0			With [BAZ]
2	06505488AA	1				EV0			SCREW AND WASHER, Hex
3	06505482AA	1				EV0			SCREW AND WASHER, Hex Head, M8x1.25x50
4	06504930AA	1				EV0			SCREW AND WASHER, Hex Head, M10x1.5x70
5	53032380AD	1				EV0			BELT, Accessory Drive
6	53030958	1				EV0			TENSIONER, Alternator Belt

DAKOTA (AN)

SERIES	LINE	BODY	ENGINE	TRANSMISSION
L = Dakota (All)	1 = Dakota 2WD	61 = Regular Cab (112 WB)	EPE = 2.5L 4 Cylinder	DGK = 4 Speed Automatic 42RE
	5 = Dakota 4WD	31 = Club Cab (131 WB)	EHC = 3.9L 6 Cylinder	DGT = 4 Speed Automatic 46RE
		84 = Quad Cab (131 WB)	EML = 5.0L 8 Cylinder	DDC = 5 Speed HD Manual
			EVA = 4.7L Magnum V8	DDK = 5 Speed HD Manual
			EP0 = All 2.5L	DG4 = Multispeed Automatic 45RFE
			EH0 = All 3.9L	DG0 = All Automatic Transmissions
			EM0 = All 5.9L	DBB = All Manual Transmissions
			EV0 = All 4.7L	

Distributors
Figure 8-306

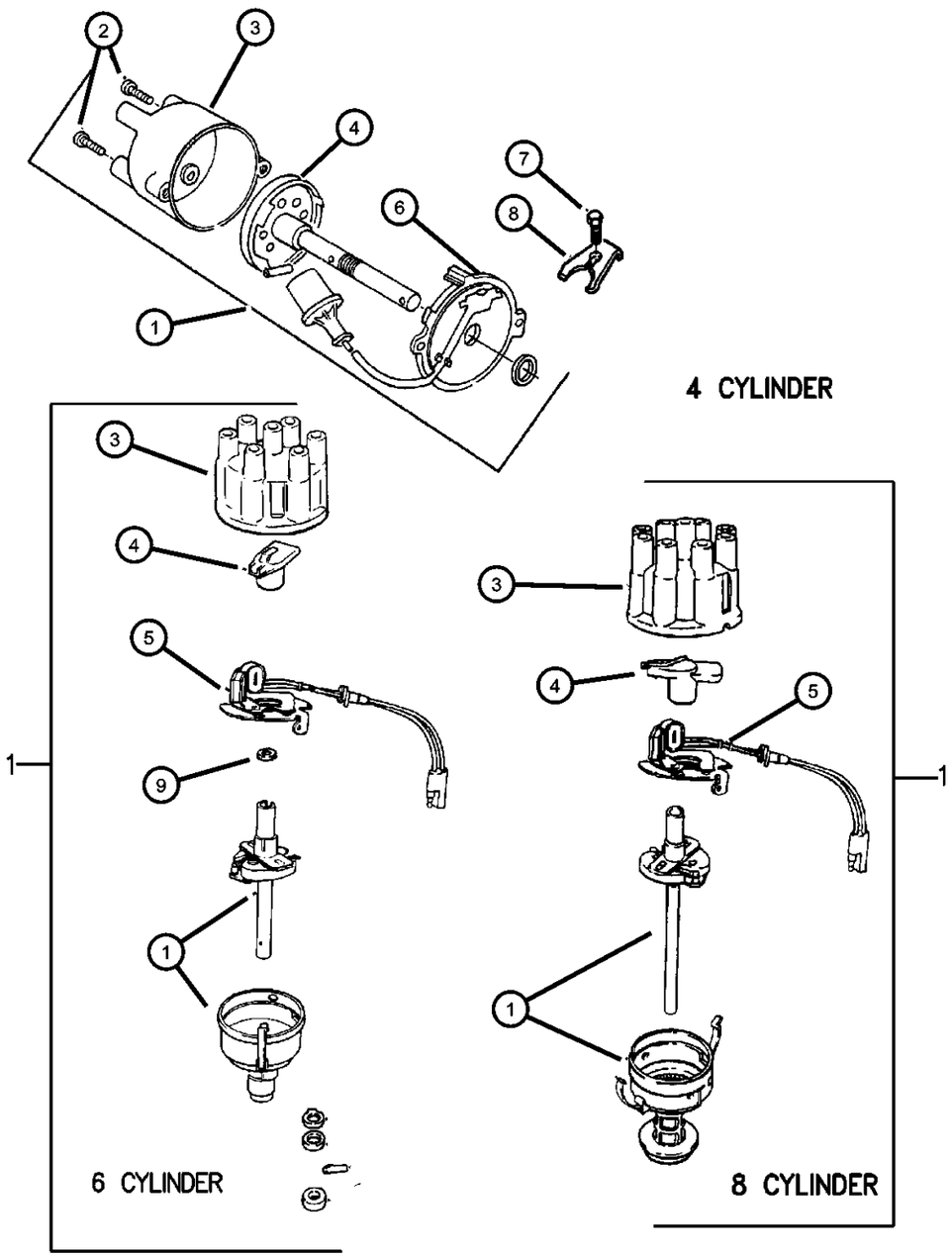

ITEM	PART NUMBER	QTY	LINE	SERIES	BODY	ENGINE	TRANS	TRIM	DESCRIPTION
EP0=2.5L Engine EH0=3.9L Engine EM0=5.9L Engine									
1									DISTRIBUTOR, Engine
	04740338AB	1				EH0			
	04740339AB	1				EM0			
	56041033	1				EP0			
2									SCREW, Hex Head, M5x0.8x27
	56026706	2				EH0			
		2				EM0			
3									CAP, Distributor
	53006152AB	1				EP0			
	53008767	1				EM0			
	56026702	1				EH0			
4									ROTOR, Distributor
	53008778	1				EH0			
		1				EM0			
	56027019	1				EP0			
5									SWITCH, Distributor Pick-Up
	56028143	1				EH0			
		1				EM0			
6	56041030	1				EP0			SWITCHPLATE, Distributor
7	06028606	1				EH0, EM0			SCREW AND WASHER, Hex Head Lock, .312-18x1.00
8									CLAMP, Distributor
	04343950	1				EH0, EM0			
	33004242	1				EP0			
9	02875923	1				EH0, EM0			O RING, Distributor
-10	J3181288	1				EP0			GASKET, Distributor

DAKOTA (AN)

SERIES	LINE	BODY	ENGINE	TRANSMISSION
L = Dakota (All)	1 = Dakota 2WD 5 = Dakota 4WD	61 = Regular Cab (112 WB) 31 = Club Cab (131 WB) 84 = Quad Cab (131 WB)	EPE = 2.5L 4 Cylinder EHC = 3.9L 6 Cylinder EML = 5.0L 8 Cylinder EVA = 4.7L Magnum V8 EP0 = All 2.5L EH0 = All 3.9L EM0 = All 5.9L EV0 = All 4.7L	DGK = 4 Speed Automatic 42RE DGT = 4 Speed Automatic 46RE DDC = 5 Speed HD Manual DDK = 5 Speed HD Manual DG4 = Multispeed Automatic 45RFE DG0 = All Automatic Transmissions DBB = All Manual Transmissions

Modules
Figure 8-405

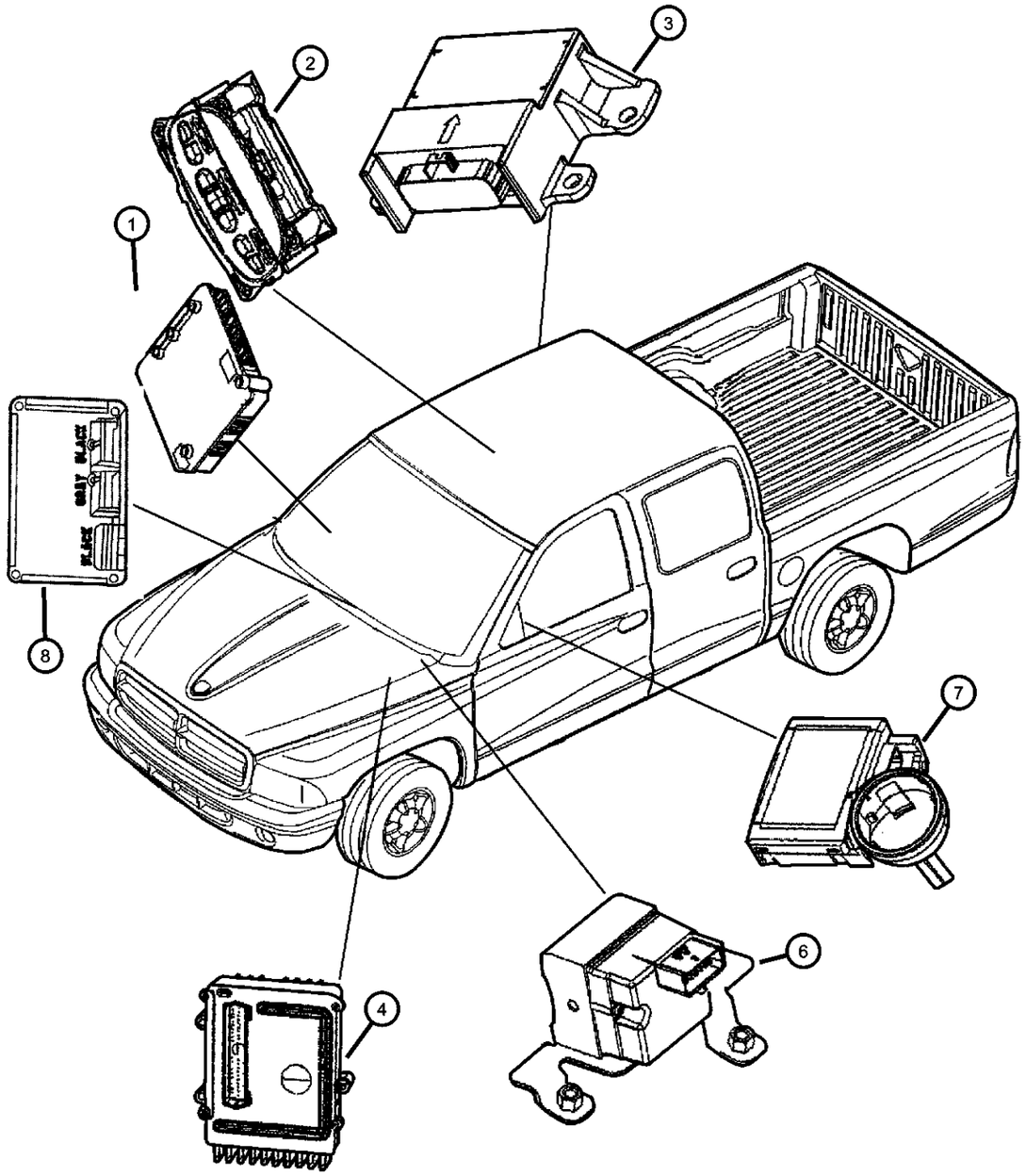

ITEM	PART NUMBER	QTY	LINE	SERIES	BODY	ENGINE	TRANS	TRIM	DESCRIPTION
1									MODULE, Time and Alarm
	56049071AG	1							Without Keyless Entry, Security Alarm & without Audio Control Steering Wheel (Without Power Locks)
	56049072AG	1							With Keyless Entry, with or without Security Alarm & with or without Audio Control Steering Wheel (With Power Locks)
2	56049050AE	1							MODULE, Compass Temperature
3									MODULE, Air Bag Control
	56043074AB	1			31, 61				
	56043138AB	1			84				
4	56028694AC	1					DG4		MODULE, Transmission Control
-5	56028228AA	1					DG4		BRACKET, Transmission Control Unit
6									MODULE, Anti-lock Brakes
	05080491AB	1							Rear Wheel ABS
	05080585AB	1			31, 61				Four Wheel ABS
	05080586AB	1			84				Four Wheel ABS
7	56045275AB	1							MODULE, Immobilizer
8	56028242AF	1	5						MODULE, Transfer Case Control, Located Under The Dash

DAKOTA (AN)

SERIES	LINE	BODY	ENGINE	TRANSMISSION
L = Dakota (All)	1 = Dakota 2WD	61 = Regular Cab (112 WB)	EPE = 2.5L 4 Cylinder	DGK = 4 Speed Automatic 42RE
	5 = Dakota 4WD	31 = Club Cab (131 WB)	EHC = 3.9L 6 Cylinder	DGT = 4 Speed Automatic 46RE
		84 = Quad Cab (131 WB)	EML = 5.0L 8 Cylinder	DDC = 5 Speed HD Manual
			EVA = 4.7L Magnum V8	DDK = 5 Speed HD Manual
			EP0 = All 2.5L	DG4 = Multispeed Automatic 45RFE
			EH0 = All 3.9L	DG0 = All Automatic Transmissions
			EM0 = All 5.9L	DBB = All Manual Transmissions
			EV0 = All 4.7L	

Power Distribution Center Relays and Fuses
Figure 8-505

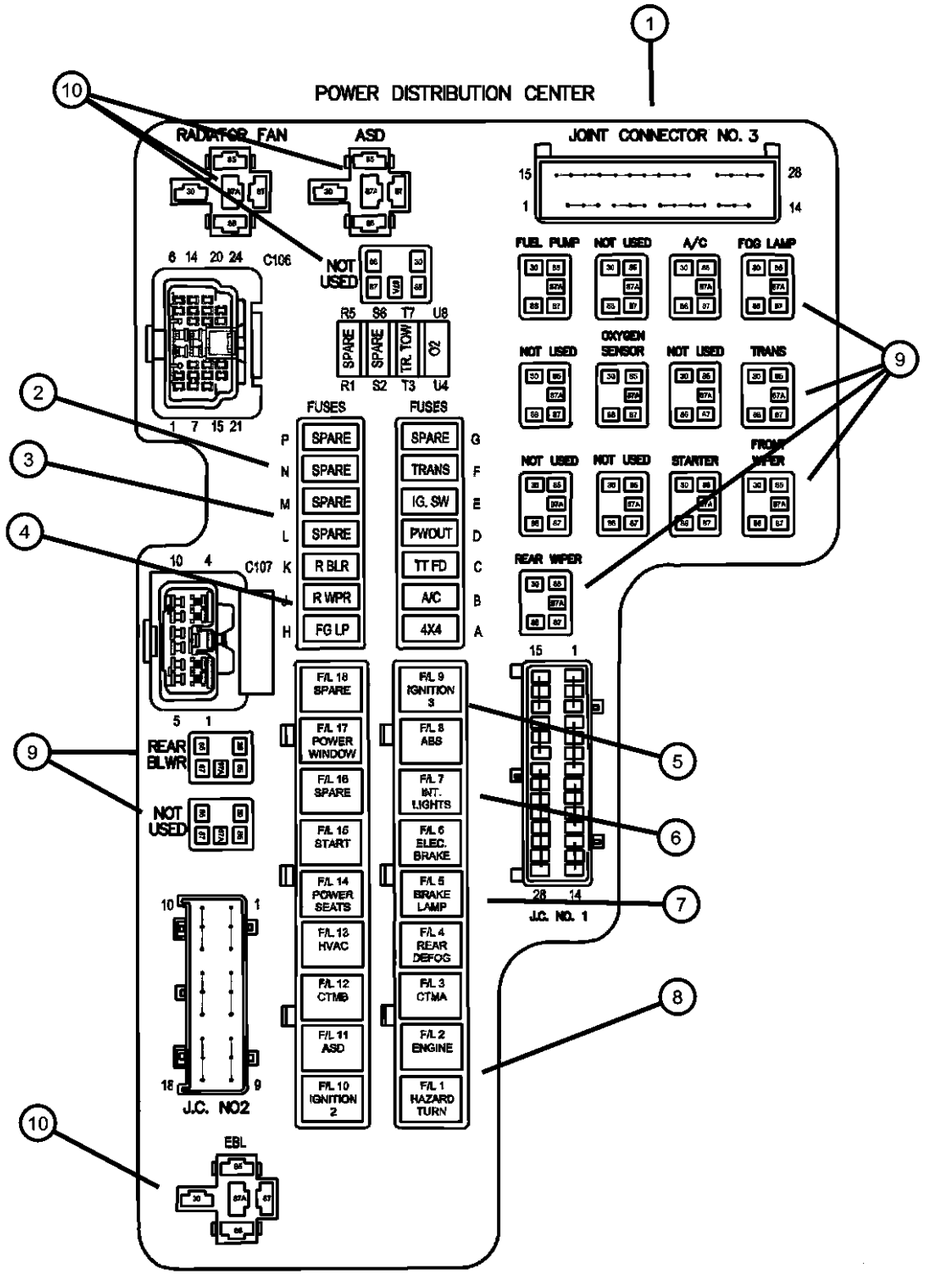

ITEM	PART NUMBER	QTY	LINE	SERIES	BODY	ENGINE	TRANS	TRIM	DESCRIPTION
1	56028242AF	1							POWER DISTRIBUTION CENTER, Serviced in Headlamp to Dash Harness only, (NOT SERVICED)
2	000ATM10	AR							FUSE, Mini, 10 AMP, Red
3	000ATM20	AR							FUSE, Mini, 20 AMP, Yellow
4	000ATM25	AR							FUSE, Mini, 25 Amp, Natural
5	000FLF20	AR							CARTRIDGE, Fuseable Link, 20 AMP, Blue
6	000FLF30	AR							CARTRIDGE, Fuseable Link, 30 Amp, Pink
7	000FLF40	AR							CARTRIDGE, Fuseable Link, 40 AMP, Green
8	06101620	AR							CARTRIDGE, Fuseable Link, 50 AMP, Red
9	56049018AB	1							RELAY, Mini, Foglamp
10	04638094	AR							RELAY PACKAGE, Electrical
-11	56021395AJ	AR							COVER, Power Distribution Center
-12	06101757	1							FUSIBLE LINK, 140 AMP

DAKOTA (AN)

SERIES	LINE	BODY	ENGINE	TRANSMISSION
L = Dakota (All)	1 = Dakota 2WD	61 = Regular Cab (112 WB)	EPE = 2.5L 4 Cylinder	DGK = 4 Speed Automatic 42RE
	5 = Dakota 4WD	31 = Club Cab (131 WB)	EHC = 3.9L 6 Cylinder	DGT = 4 Speed Automatic 46RE
		84 = Quad Cab (131 WB)	EML = 5.0L 8 Cylinder	DDC = 5 Speed HD Manual
			EVA = 4.7L Magnum V8	DDK = 5 Speed HD Manual
			EP0 = All 2.5L	DG4 = Multispeed Automatic 45RFE
			EH0 = All 3.9L	DG0 = All Automatic Transmissions
			EM0 = All 5.9L	DBB = All Manual Transmissions
			EV0 = All 4.7L	

AR = use ase required - = Non illustrrated part

Junction Block Relays and Fuses
Figure 8-510

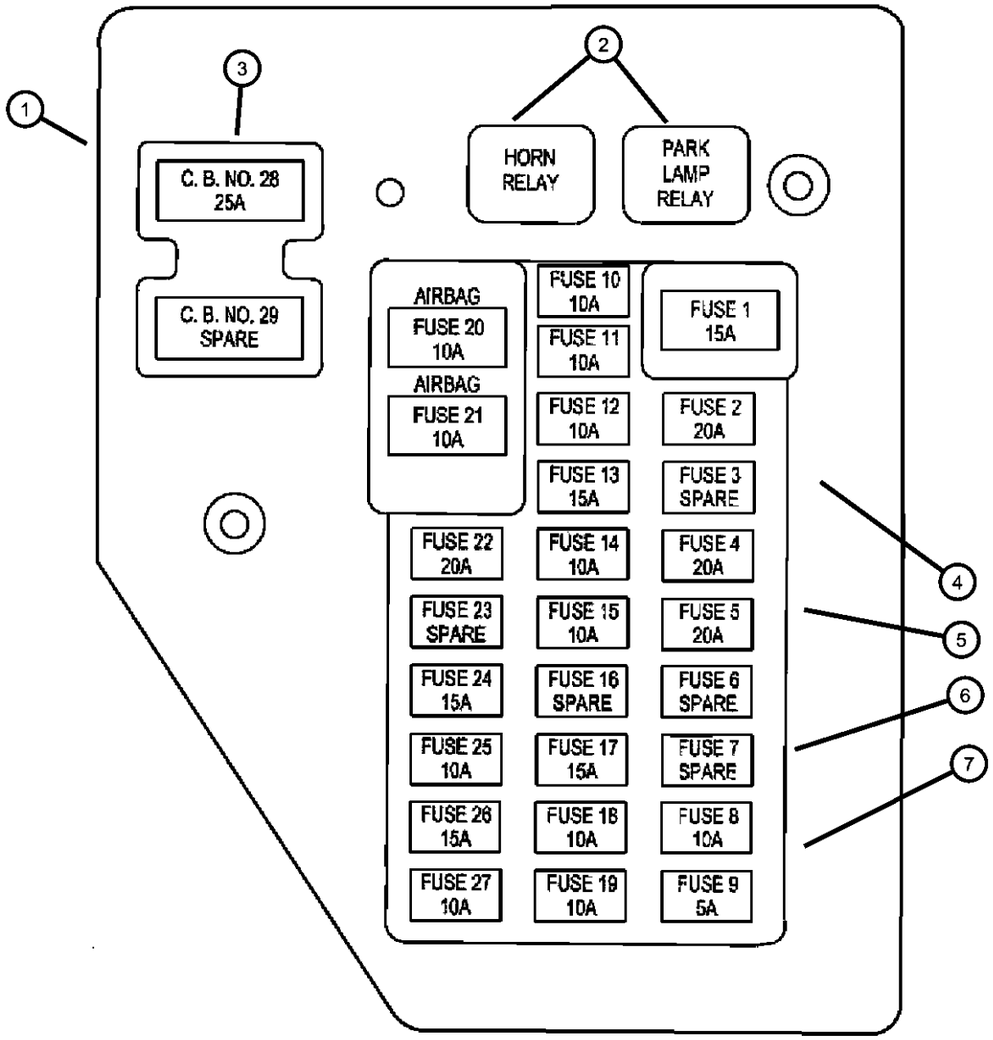

ITEM	PART NUMBER	QTY	LINE	SERIES	BODY	ENGINE	TRANS	TRIM	DESCRIPTION
1	56049035AB	1							JUNCTION BLOCK, Relay
2	56049018AB	1							RELAY, Mini
3	56021543	1							BREAKER, Circuit
4	0000ATM5	1							FUSE, Mini, 5 Amp, Tan
5	000ATM10	12							FUSE, Mini, 10 AMP, Red
6	000ATM15	4							FUSE, Mini, 15 AMP, Light Blue
7	000ATM20	6							FUSE, Mini, 20 AMP, Yellow
-8	56017713	1							PULLER, Fuse
-9	06101757	1							FUSIBLE LINK, 140 AMP

DAKOTA (AN)

SERIES	LINE	BODY	ENGINE	TRANSMISSION
L = Dakota (All)	1 = Dakota 2WD	61 = Regular Cab (112 WB)	EPE = 2.5L 4 Cylinder	DGK = 4 Speed Automatic 42RE
	5 = Dakota 4WD	31 = Club Cab (131 WB)	EHC = 3.9L 6 Cylinder	DGT = 4 Speed Automatic 46RE
		84 = Quad Cab (131 WB)	EML = 5.0L 8 Cylinder	DDC = 5 Speed HD Manual
			EVA = 4.7L Magnum V8	DDK = 5 Speed HD Manual
			EP0 = All 2.5L	DG4 = Multispeed Automatic 45RFE
			EH0 = All 3.9L	DG0 = All Automatic Transmissions
			EM0 = All 5.9L	DBB = All Manual Transmissions
			EV0 = All 4.7L	

Sensors [2.5 EP0 Engine]
Figure 8-605

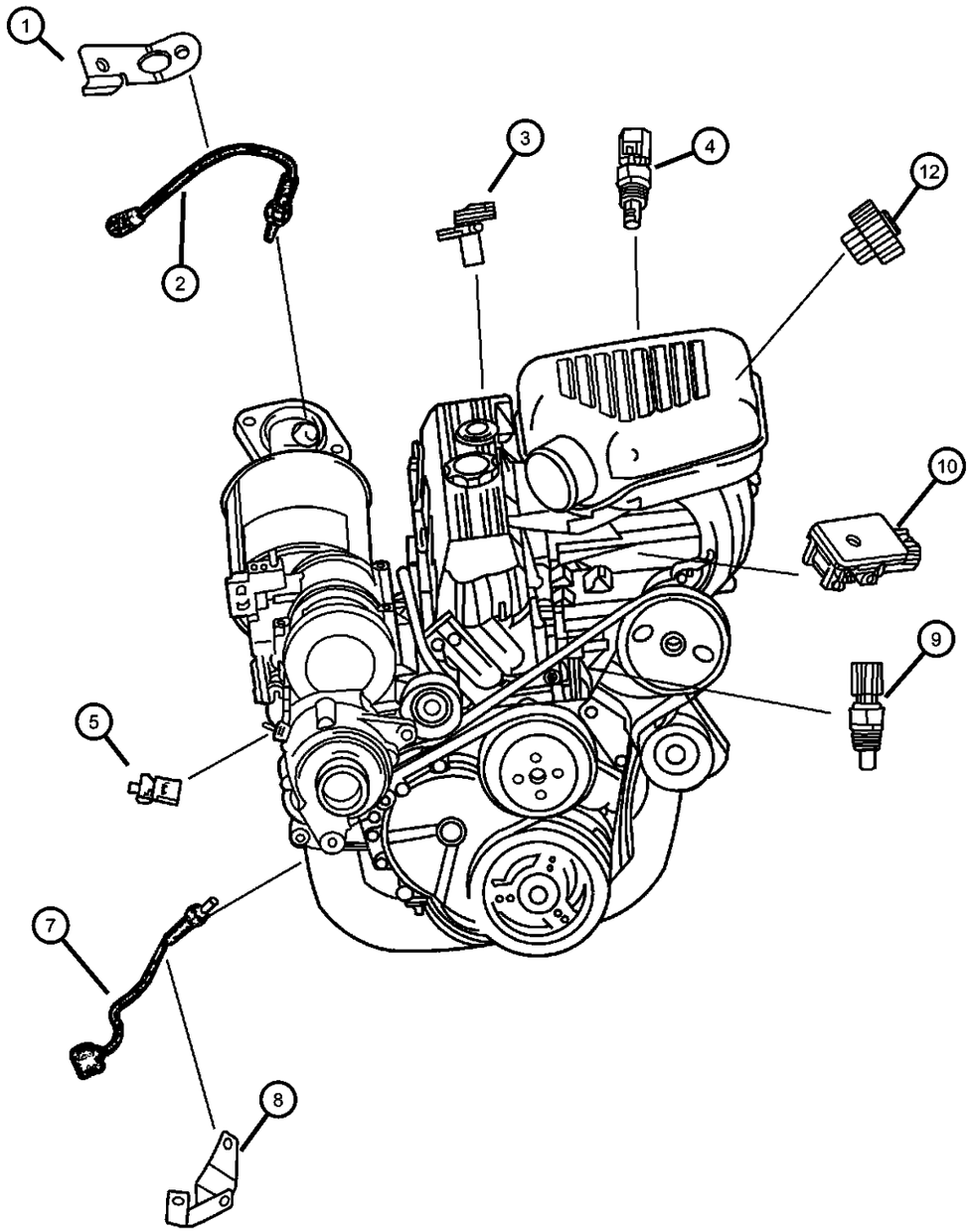

ITEM	PART NUMBER	QTY	LINE	SERIES	BODY	ENGINE	TRANS	TRIM	DESCRIPTION
EP0=2.5L Engine									
1	56041069	1				EP0			BRACKET, Oxygen Sensor
2	56029112AA	1				EP0			SENSOR, Oxygen, After Catalyst
3	56027865AB	1				EP0			SENSOR, Crankshaft Position
4	56027872	1				EP0			SENSOR, Air Temperature
5	56031005	1				EP0			SENDING UNIT, Oil Pressure
-6	J0934001	1				EP0			ELBOW, Oil Gauge Sending Unit
7	56031110AA	1				EP0			SENSOR, Oxygen, Before Catalyst
8	56041069	1				EP0			BRACKET, Oxygen Sensor
9	56027873	1				EP0			SENSOR, Coolant Temperature
10	56029405	1				EP0			SENSOR, MAP
-11	53009672	1				EP0			CONNECTOR, Emission Hose, Throttle Body to Map Sensor
12	05086203AA	1				EP0			SENSOR PACKAGE, Throttle Position

DAKOTA (AN)

SERIES	LINE	BODY	ENGINE	TRANSMISSION
L = Dakota (All)	1 = Dakota 2WD	61 = Regular Cab (112 WB)	EPE = 2.5L 4 Cylinder	DGK = 4 Speed Automatic 42RE
	5 = Dakota 4WD	31 = Club Cab (131 WB)	EHC = 3.9L 6 Cylinder	DGT = 4 Speed Automatic 46RE
		84 = Quad Cab (131 WB)	EML = 5.0L 8 Cylinder	DDC = 5 Speed HD Manual
			EVA = 4.7L Magnum V8	DDK = 5 Speed HD Manual
			EP0 = All 2.5L	DG4 = Multispeed Automatic 45RFE
			EH0 = All 3.9L	DG0 = All Automatic Transmissions
			EM0 = All 5.9L	DBB = All Manual Transmissions
			EV0 = All 4.7L	

Sensors [4.7 EV0 Engine]
Figure 8-610

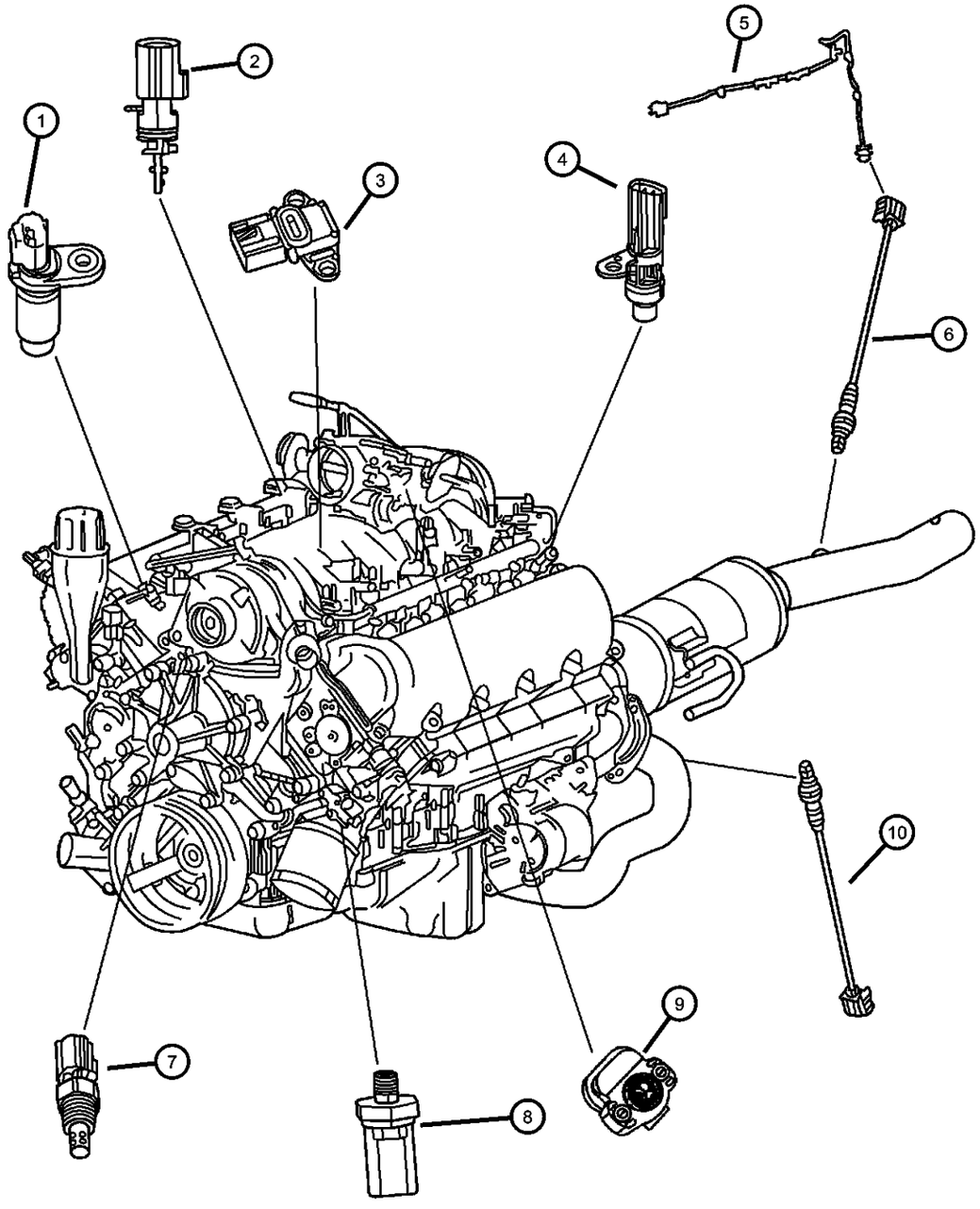

ITEM	PART NUMBER	QTY	LINE	SERIES	BODY	ENGINE	TRANS	TRIM	DESCRIPTION
Note:									
[EV0] = All 4.7L Gas Engines									
[DG0] = All 4 Speed Automatic Transmission									
[DDC] = 5 Speed Heavy Duty Manual Transmission									
1	56028133AE	1				EV0			SENSOR, Camshaft
2	56028364AA	1				EV0			SENSOR, Air Temperature
3	56041018AB	1				EV0			SENSOR, MAP
4	56028666AA	1				EV0			SENSOR, Crankshaft Position
5	56045483AD	1	1		84	EV0			WIRING, Oxygen Sensor Jumper
6									SENSOR, Oxygen
	56028586AA	1			31, 61	EV0	DG0		[NAS,NA1], After Catalyst, Right
		1			31, 61	EV0	DDC		[NAS,NA1], After Catalyst, Right
		1			84	EV0			[NAA,NA1]
	56028587AA	1			31, 61	EV0	DG0		[NAS,NA1], After Catalyst, Left
		1			84	EV0	DG0		[NAE], After Catalyst, Left
7	56027873	1				EV0			SENSOR, Coolant Temperature
8	56031005	1				EV0			SENDING UNIT, Oil Pressure
9	05017479AA	1				EV0			SENSOR KIT, Throttle Position
10									SENSOR, Oxygen
	56029333AA	1			31, 61	EV0			Before Catalyst
		1			84	EV0			Before Catalyst

DAKOTA (AN)

SERIES	LINE	BODY	ENGINE	TRANSMISSION
L = Dakota (All)	1 = Dakota 2WD	61 = Regular Cab (112 WB)	EPE = 2.5L 4 Cylinder	DGK = 4 Speed Automatic 42RE
	5 = Dakota 4WD	31 = Club Cab (131 WB)	EHC = 3.9L 6 Cylinder	DGT = 4 Speed Automatic 46RE
		84 = Quad Cab (131 WB)	EML = 5.0L 8 Cylinder	DDC = 5 Speed HD Manual
			EVA = 4.7L Magnum V8	DDK = 5 Speed HD Manual
			EP0 = All 2.5L	DG4 = Multispeed Automatic 45RFE
			EH0 = All 3.9L	DG0 = All Automatic Transmissions
			EM0 = All 5.9L	DBB = All Manual Transmissions
			EV0 = All 4.7L	

Sensors [3.9 EH0 and 5.9 EM0 Engines]
Figure 8-615

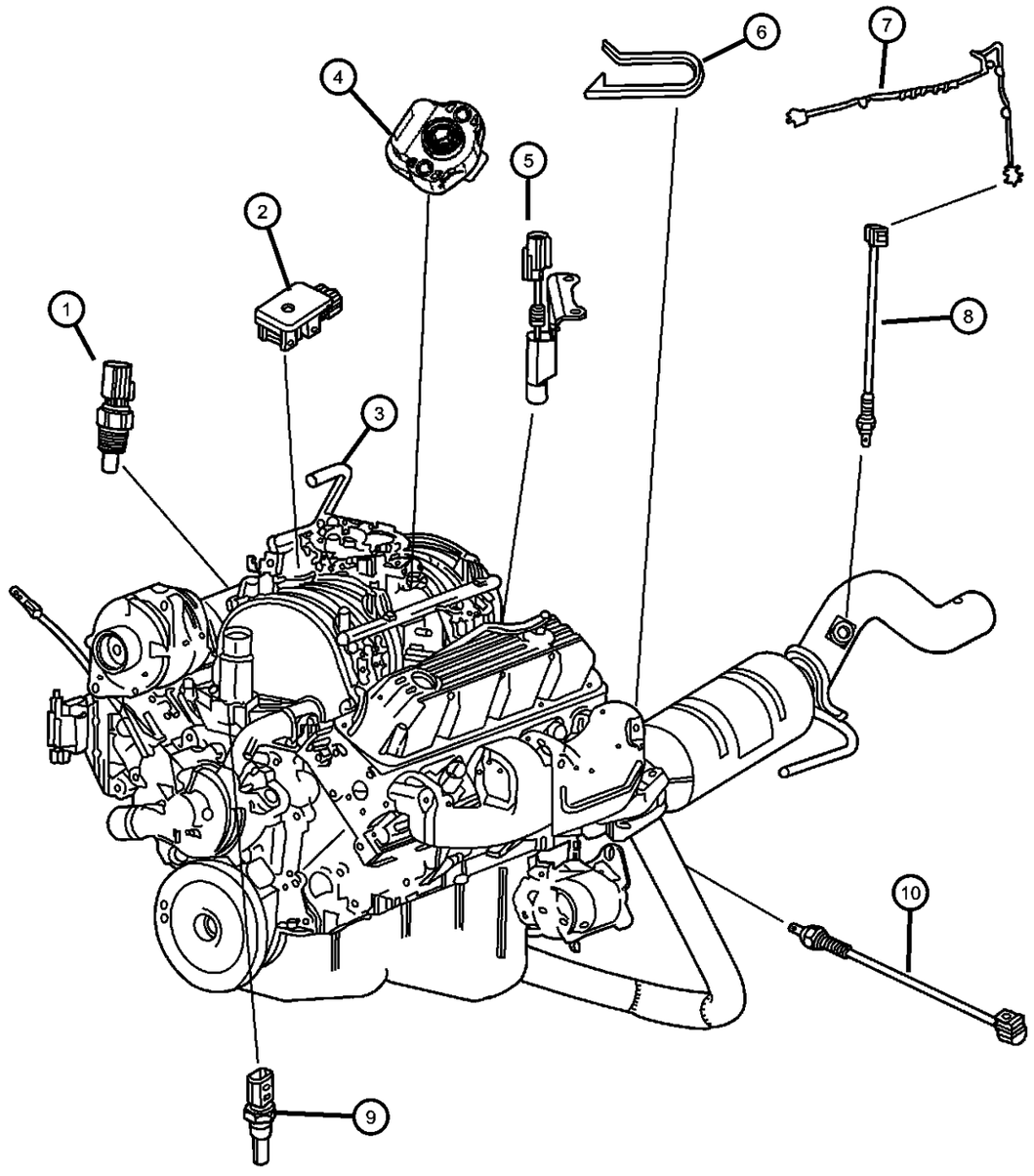

ITEM	PART NUMBER	QTY	LINE	SERIES	BODY	ENGINE	TRANS	TRIM	DESCRIPTION
Note: DG0 = All Automatic Transmissions; EM0 = All 5.9L 8 Cylinder Gas Engines; EV0 = All 4.7L Gas Engines									
1	56027872	1				EH0, EM0			SENSOR, Air Temperature
2	56029405	1				EH0, EM0			SENSOR, MAP
3	53009672	1				EH0, EM0			CONNECTOR, Emission Hose, Throttle Body to Map Sensor
4	05017479AA	1				EM0			SENSOR KIT, Throttle Position
5									SENSOR, Crankshaft Position
	56027870	1				EH0, EM0	DG0		
	56027871	1				EH0	DBB		
6	56027871	1							BRACKET, Oxygen Sensor, (NOT SERVICED)
7	56049017AB	1	1		84	EH0, EM0			WIRING, Oxygen Sensor Jumper
8									SENSOR, Oxygen
	56041702AA	1			31, 61	EM0, EH0			U.S. 50 State / Export Emissions, After Catalyst, Right
		1			84	EH0, EM0			California Emissions, After Catalyst, Right
	56029112AA	1			84	EH0, EM0			Federal / Export Emissions, After Catalyst
	56041706AA	1			31, 61	EH0, EM0			U.S. 50 State / Export Emissions, After Catalyst, Left
		1			84	EH0, EM0			California Emissions, After Catalyst, Left
9	56004815	1				EH0, EM0			SENSOR, Coolant Temperature
10									SENSOR, Oxygen
	56041699AA	1			31, 61	EH0, EM0			[NAS.NA1] Before Catalyst, Left
		1			84	EH0, EM0			[NAE] Before Catalyst, Left
	56031110AA	1			84	EH0, EM0			[NAA,NA1] Before Catalyst
	56041698AA	1			31, 61	EH0, EM0			[NAS,NA1] Before Catalyst, Right
		1			84	EH0, EM0			[NAE] Emissions, Before Catalyst, Right
-11		1							SENSOR, Camshaft, Serviced in Distributor Pickup Switch, (NOT SERVICED),

DAKOTA (AN)

SERIES	LINE	BODY	ENGINE	TRANSMISSION
L = Dakota (All)	1 = Dakota 2WD 5 = Dakota 4WD	61 = Regular Cab (112 WB) 31 = Club Cab (131 WB) 84 = Quad Cab (131 WB)	EPE = 2.5L 4 Cylinder EHC = 3.9L 6 Cylinder EML = 5.0L 8 Cylinder EVA = 4.7L Magnum V8 EP0 = All 2.5L EH0 = All 3.9L EM0 = All 5.9L EV0 = All 4.7L	DGK = 4 Speed Automatic 42RE DGT = 4 Speed Automatic 46RE DDC = 5 Speed HD Manual DDK = 5 Speed HD Manual DG4 = Multispeed Automatic 45RFE DG0 = All Automatic Transmissions DBB = All Manual Transmissions

Sensors Drivetrain
Figure 8-620

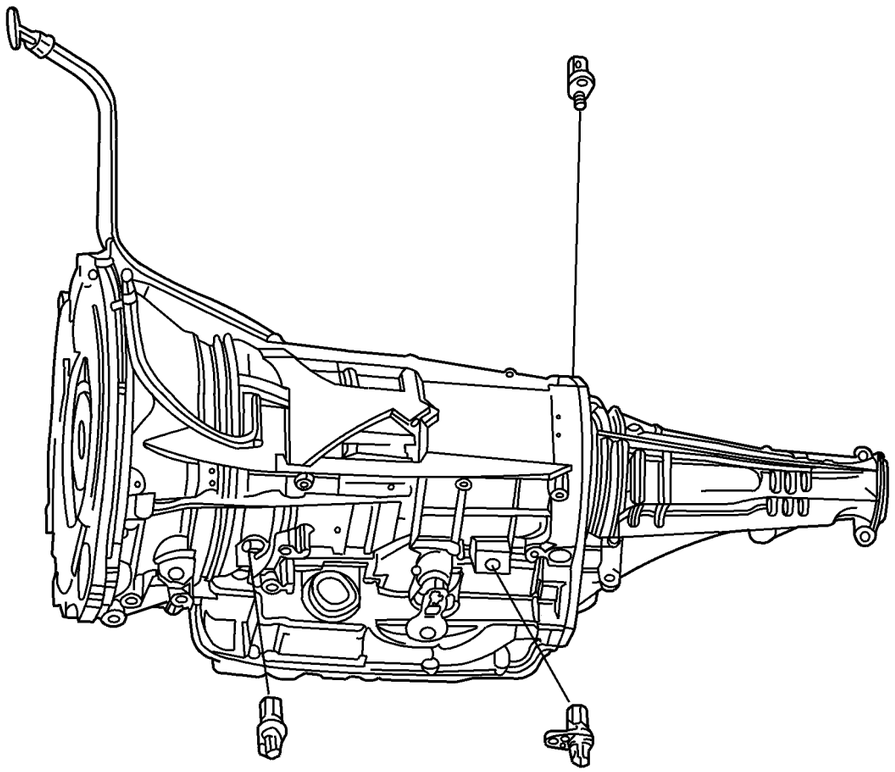

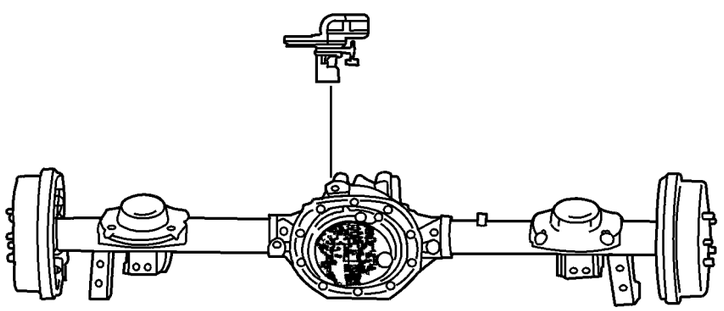

ITEM	PART NUMBER	QTY	LINE	SERIES	BODY	ENGINE	TRANS	TRIM	DESCRIPTION
[DG4]=Multi-Speed Automatic Transmission									
1									TRANSDUCER, Pressure Sensor
	04799758	1	5				DG4		
		1	1				DG4		
	56028196AA	1	1				DGK		
		1	5				DGK		
		1	5				DGT		
		1	1				DGT		
2									SENSOR, Transmission Output Speed
	04412879	1	5				DGT		
		1	1				DGK		
	04799061	2	5				DG4		
		2	1				DG4		
	04800879	1	5				DGK		
		1	1				DGT		
3	56028187AD	1					DG0		SENSOR, Wheel Speed
-4	56028187AD	1							SENSOR, Transfer Case Mode (serviced in Shift Motor), (NOT SERVICED)
-5									SWITCH, Neutral, Safety, Back Up
	56045489AA	1	5				DGT		Transmission Range Sensor
		1	1				DGK		Transmission Range Sensor
		1	5				DGK		Transmission Range Sensor
		1	1				DGT		Transmission Range Sensor

DAKOTA (AN)

SERIES	LINE	BODY	ENGINE	TRANSMISSION
L = Dakota (All)	1 = Dakota 2WD	61 = Regular Cab (112 WB)	EPE = 2.5L 4 Cylinder	DGK = 4 Speed Automatic 42RE
	5 = Dakota 4WD	31 = Club Cab (131 WB)	EHC = 3.9L 6 Cylinder	DGT = 4 Speed Automatic 46RE
		84 = Quad Cab (131 WB)	EML = 5.0L 8 Cylinder	DDC = 5 Speed HD Manual
			EVA = 4.7L Magnum V8	DDK = 5 Speed HD Manual
			EP0 = All 2.5L	DG4 = Multispeed Automatic 45RFE
			EH0 = All 3.9L	DG0 = All Automatic Transmissions
			EM0 = All 5.9L	DBB = All Manual Transmissions
			EV0 = All 4.7L	

Sensors - Body
Figure 8-625

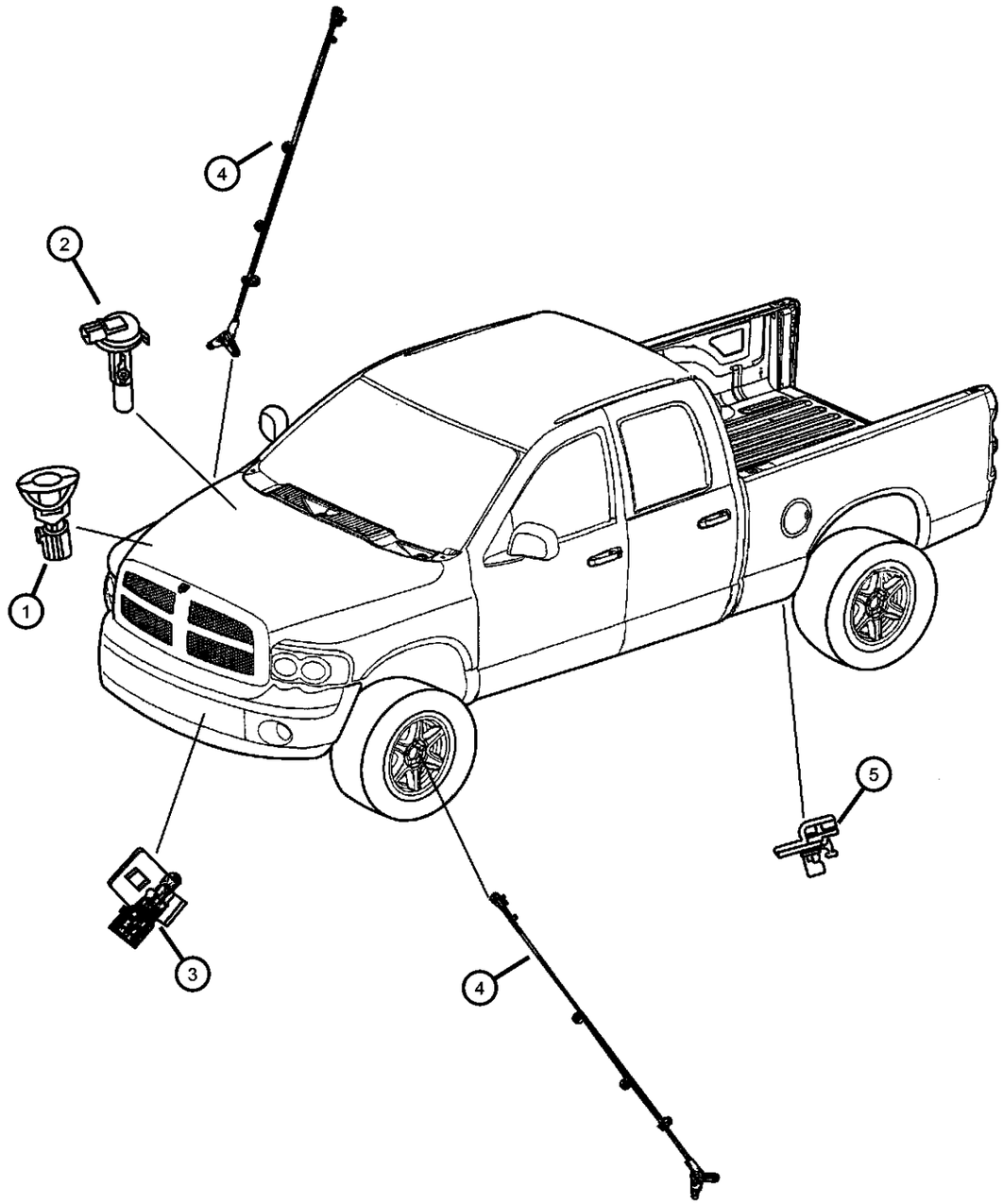

ITEM	PART NUMBER	QTY	LINE	SERIES	BODY	ENGINE	TRANS	TRIM	DESCRIPTION
1	56027332	1							SENSOR, Battery Temperature
2									SENSOR, Washer Fluid Level
	55077351AA	1				EH0			
		1				EM0, EP0, EV0			
3	56042395	1							SENSOR, Ambient Temperature
4									SENSOR KIT, Anti-Lock Brakes
	05016338AA	1	5						Right
	05016339AA	1	5						Left
5									SENSOR, Wheel Speed
	56028187AD	1	1				DBB		
		1					DG0		
		1	5				DBB		

DAKOTA (AN)

SERIES	LINE	BODY	ENGINE	TRANSMISSION
L = Dakota (All)	1 = Dakota 2WD	61 = Regular Cab (112 WB)	EPE = 2.5L 4 Cylinder	DGK = 4 Speed Automatic 42RE
	5 = Dakota 4WD	31 = Club Cab (131 WB)	EHC = 3.9L 6 Cylinder	DGT = 4 Speed Automatic 46RE
		84 = Quad Cab (131 WB)	EML = 5.0L 8 Cylinder	DDC = 5 Speed HD Manual
			EVA = 4.7L Magnum V8	DDK = 5 Speed HD Manual
			EP0 = All 2.5L	DG4 = Multispeed Automatic 45RFE
			EH0 = All 3.9L	DG0 = All Automatic Transmissions
			EM0 = All 5.9L	DBB = All Manual Transmissions
			EV0 = All 4.7L	

AR = use ase required - = Non illustrrated part

Single Board Engine Controllers (JTEC)
Figure 8-710

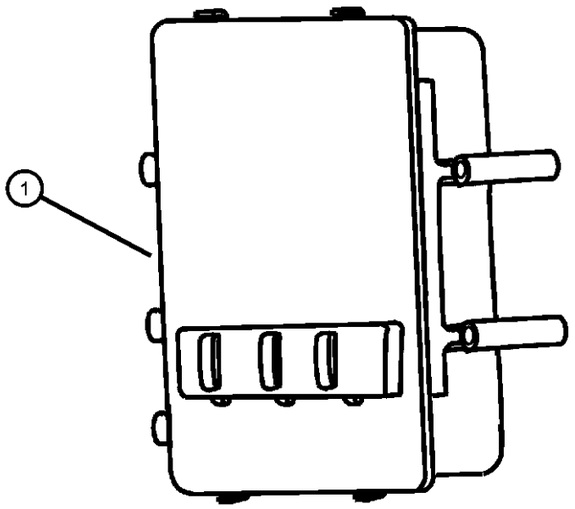

ITEM	PART NUMBER	QTY	LINE	SERIES	BODY	ENGINE	TRANS	TRIM	DESCRIPTION
EP0=2.5L Engine EH0=3.9L Engine EVA=4.7LPower Tech Engine EM0=5.9L Engine DG0=Automatic Transmission DBB=Manual Transmission									
1									MODULE, Powertrain Control
	56028670AB	1			31, 61	EH0	DBB		Export Emissions
	56028671AB	1			31, 61	EH0	DG0		Export Emissions
	56028672AB	1			31, 61	EVA	DG0		Export Emissions
	56028673AB	1			31, 61	EVA	DBB		Export Emissions
	56028674AB	1			84	EVA	DG0		Export Emissions
	56028675AB	1			84	EVA	DBB		Export Emissions
	56028677AB	1			31, 61	EM0	DG0		Export Emissions
	56028678AB	1			84	EM0	DG0		Export Emissions
	56029350AB	1			84	EVA	DBB		Federal Emissions
	56029351AA	1	1		84	EVA	DG0		U.S. 50 States Emissions
	56029351AB	1	1		84	EVA	DG0		Federal Emissions
	56029352AA	1	5		84	EVA	DG0		U.S. 50 States Emissions
	56029352AB	1	5		84	EVA	DG0		Federal Emissions
	56029353AB	1			84	EM0	DG0		Federal Emissions
	56029354AB	1			84	EH0	DBB		Federal Emissions
	56029355AC	1			84	EH0	DG0		Federal Emissions
	56040296AC	1				EPE	DBB		Export Emissions
	56040298AC	1				EPE	DBB		U.S. 50 States Emissions
	56040301AB	1			31, 61	EH0	DBB		U.S. 50 States Emissions
		1			84	EH0	DBB		California Emissions
	56040302AB	1			31, 61	EH0	DG0		U.S. 50 States Emissions
		1			84	EH0	DG0		California Emissions
	56040303AB	1			84	EH0	DBB		Export Emissions
	56040306AB	1			84	EH0	DG0		Export Emissions
	56040308AC	1			31, 61	EVA	DG0		U.S. 50 States Emissions
		1	5		84	EVA	DG0		California Emissions
	56040310AC	1			31, 61	EVA	DBB		U.S. 50 States Emissions

DAKOTA (AN)

SERIES	LINE	BODY	ENGINE	TRANSMISSION
L = Dakota (All)	1 = Dakota 2WD 5 = Dakota 4WD	61 = Regular Cab (112 WB) 31 = Club Cab (131 WB) 84 = Quad Cab (131 WB)	EPE = 2.5L 4 Cylinder EHC = 3.9L 6 Cylinder EML = 5.0L 8 Cylinder EVA = 4.7L Magnum V8 EP0 = All 2.5L EH0 = All 3.9L EM0 = All 5.9L EV0 = All 4.7L	DGK = 4 Speed Automatic 42RE DGT = 4 Speed Automatic 46RE DDC = 5 Speed HD Manual DDK = 5 Speed HD Manual DG4 = Multispeed Automatic 45RFE DG0 = All Automatic Transmissions DBB = All Manual Transmissions

Single Board Engine Controllers (JTEC)
Figure 8-710

ITEM	PART NUMBER	QTY	LINE	SERIES	BODY	ENGINE	TRANS	TRIM	DESCRIPTION
		1			84	EVA	DBB		California Emissions
	56040312AB	1	1		31	EVA	DG0		U.S. 50 States Emissions
		1	1		84	EVA	DG0		California Emissions
	56040314AB	1			31, 61	EM0	DG0		California Emissions
		1			84	EM0	DG0		California Emissions
-2	56028352AA	1							BRACKET, Module

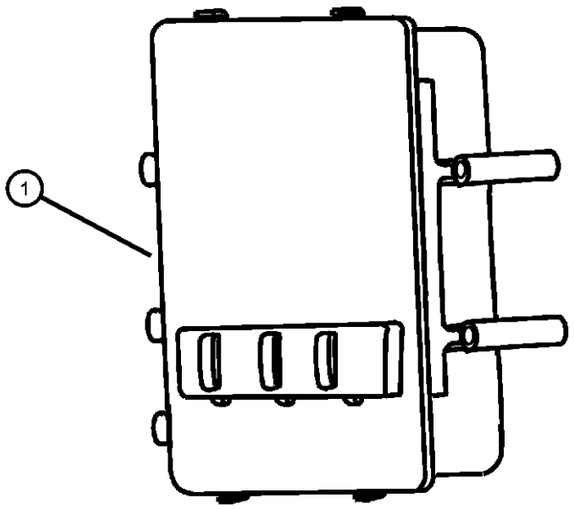

DAKOTA (AN)

SERIES	LINE	BODY	ENGINE	TRANSMISSION
L = Dakota (All)	1 = Dakota 2WD	61 = Regular Cab (112 WB)	EPE = 2.5L 4 Cylinder	DGK = 4 Speed Automatic 42RE
	5 = Dakota 4WD	31 = Club Cab (131 WB)	EHC = 3.9L 6 Cylinder	DGT = 4 Speed Automatic 46RE
		84 = Quad Cab (131 WB)	EML = 5.0L 8 Cylinder	DDC = 5 Speed HD Manual
			EVA = 4.7L Magnum V8	DDK = 5 Speed HD Manual
			EP0 = All 2.5L	DG4 = Multispeed Automatic 45RFE
			EH0 = All 3.9L	DG0 = All Automatic Transmissions
			EM0 = All 5.9L	DBB = All Manual Transmissions
			EV0 = All 4.7L	

AR = use ase required - = Non illustrrated part

Switches - Instrument Panel and Console
Figure 8-805

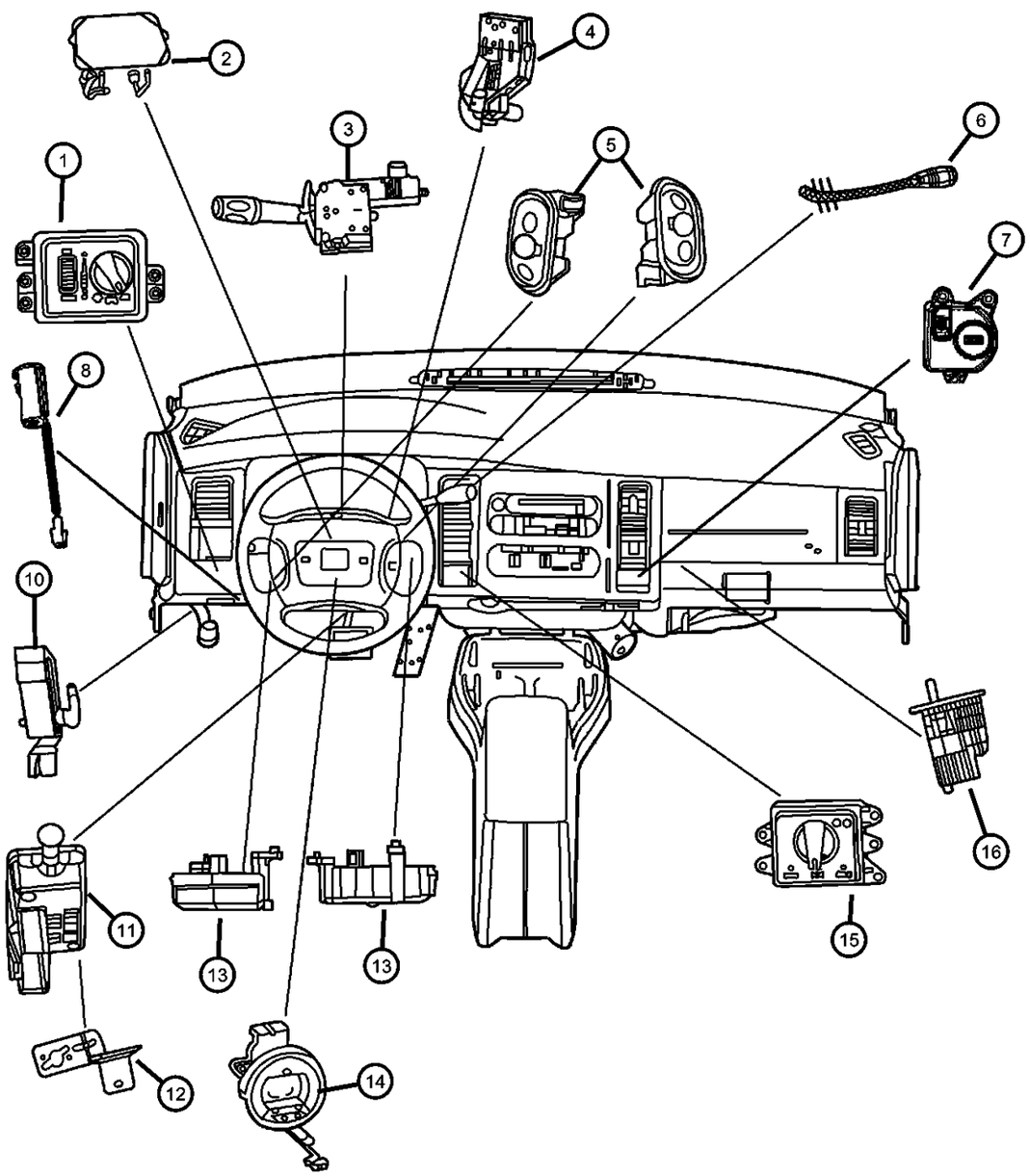

ITEM	PART NUMBER	QTY	LINE	SERIES	BODY	ENGINE	TRANS	TRIM	DESCRIPTION
Note:									
DGT = 4 Speed Automatic Transmission 46RE									
DG0 = All Automatic Transmissions									
EM0 = All 5.9L 8 Cylinder Gas Engines									
EV0 = All 4.7L Gas Engines									
1									SWITCH, Headlamp
	56045531AE	1							Without Cargo Lamp
	56045532AE	1							With Cargo Lamp
	56045533AE	1							Up to 10/17/01, With Cargo Lamp, Fog Lamp
	56045533AF	1							10/17/01 & After, With Cargo Lamp, Fog Lamp
2	05066184AA	1							SWITCH, Horn
3	56045078AD	1							SWITCH, Multifunction
4									SWITCH, Ignition
	56045112AB	1					DBB		
		1					DG0		
5									SWITCH, Remote Radio
	56045563AA	1							Left
	56045564AA	1							Right
6	05018975AA	1					DG0		SWITCH KIT, Overdrive Lockout
7	56045496AA	1			31, 61				SWITCH, Passenger Airbag Disarm
8	53007944AB	1					DBB		SWITCH, Clutch Starter Interlock
-9	05015960AA	1					DBB		COVER, Switch, Clutch Interlock Switch
10	04221463	1							SWITCH, Parking Brake
11	05083344AA	1							SWITCH PACKAGE, Stop Lamp
12	56020144AG	1							BRACKET, Brake Lamp Switch
13									SWITCH, Speed Control
	56021332AB	1							Right
	56021333AB	1							Left
14	56045403AE	1							CLOCKSPRING
15									SWITCH, Transfer Case Mode
	56045484AC	1	5						[DHT]

DAKOTA (AN)

SERIES	LINE	BODY	ENGINE	TRANSMISSION
L = Dakota (All)	1 = Dakota 2WD 5 = Dakota 4WD	61 = Regular Cab (112 WB) 31 = Club Cab (131 WB) 84 = Quad Cab (131 WB)	EPE = 2.5L 4 Cylinder EHC = 3.9L 6 Cylinder EML = 5.0L 8 Cylinder EVA = 4.7L Magnum V8 EP0 = All 2.5L EH0 = All 3.9L EM0 = All 5.9L EV0 = All 4.7L	DGK = 4 Speed Automatic 42RE DGT = 4 Speed Automatic 46RE DDC = 5 Speed HD Manual DDK = 5 Speed HD Manual DG4 = Multispeed Automatic 45RFE DG0 = All Automatic Transmissions DBB = All Manual Transmissions

Switches - Instrument Panel and Console
Figure 8-805

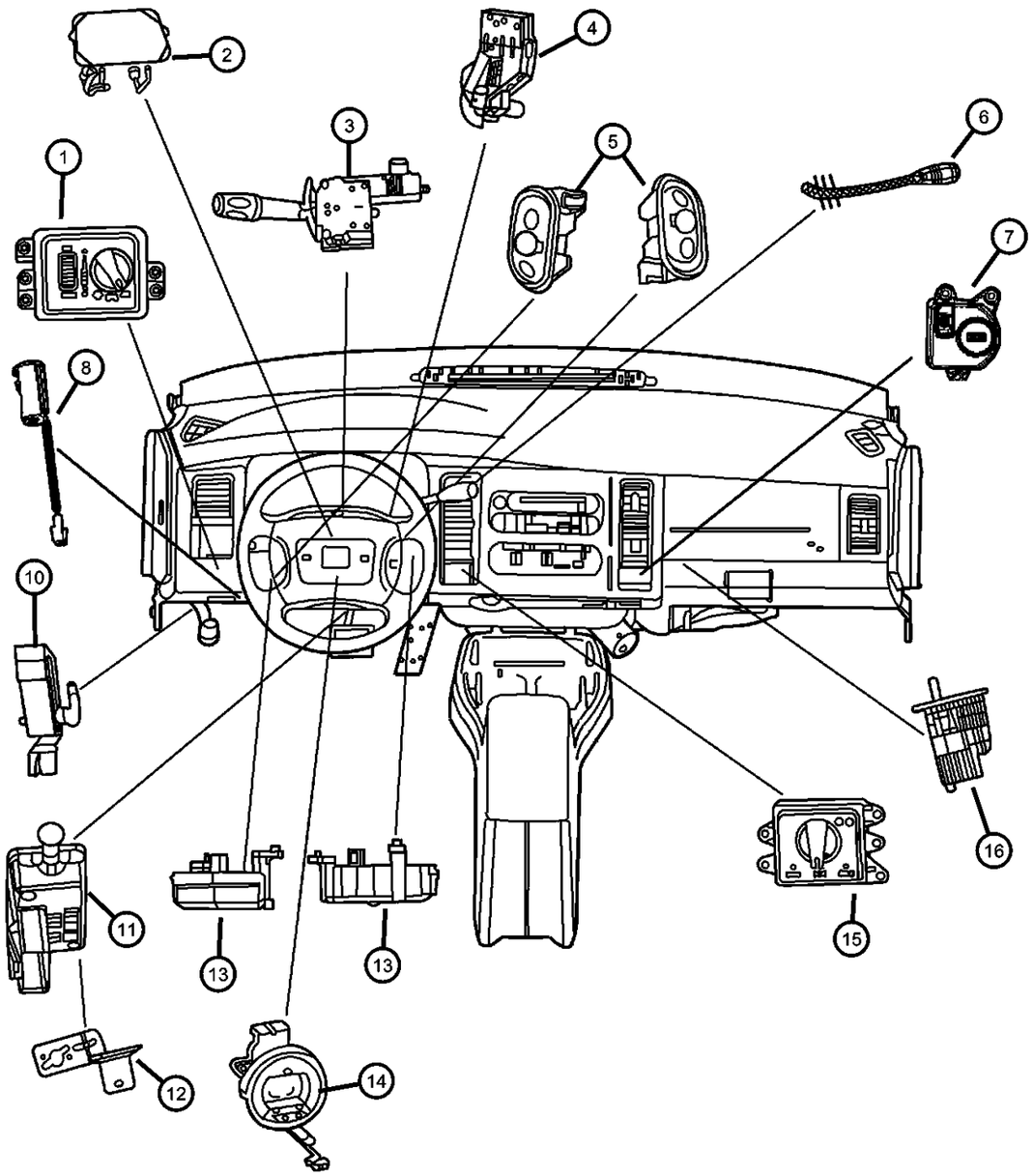

ITEM	PART NUMBER	QTY	LINE	SERIES	BODY	ENGINE	TRANS	TRIM	DESCRIPTION
	56045485AC	1							[DHV]
16	04565022	1							SWITCH AND LAMP, Glove Box

DAKOTA (AN)

SERIES	LINE	BODY	ENGINE	TRANSMISSION
L = Dakota (All)	1 = Dakota 2WD	61 = Regular Cab (112 WB)	EPE = 2.5L 4 Cylinder	DGK = 4 Speed Automatic 42RE
	5 = Dakota 4WD	31 = Club Cab (131 WB)	EHC = 3.9L 6 Cylinder	DGT = 4 Speed Automatic 46RE
		84 = Quad Cab (131 WB)	EML = 5.0L 8 Cylinder	DDC = 5 Speed HD Manual
			EVA = 4.7L Magnum V8	DDK = 5 Speed HD Manual
			EP0 = All 2.5L	DG4 = Multispeed Automatic 45RFE
			EH0 = All 3.9L	DG0 = All Automatic Transmissions
			EM0 = All 5.9L	DBB = All Manual Transmissions
			EV0 = All 4.7L	

Swtiches - Drivetrain
Figure 8-810

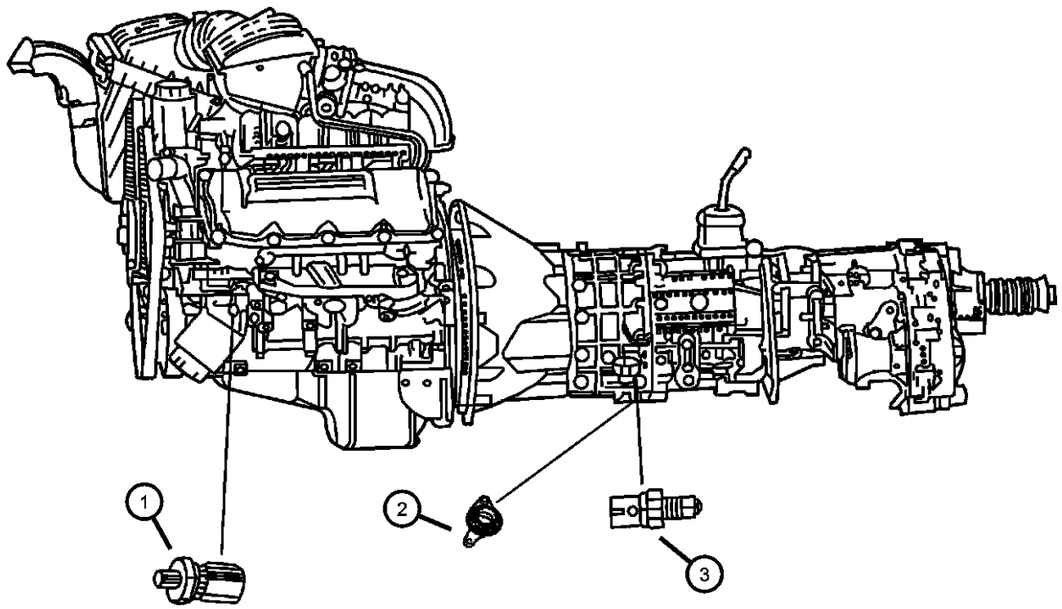

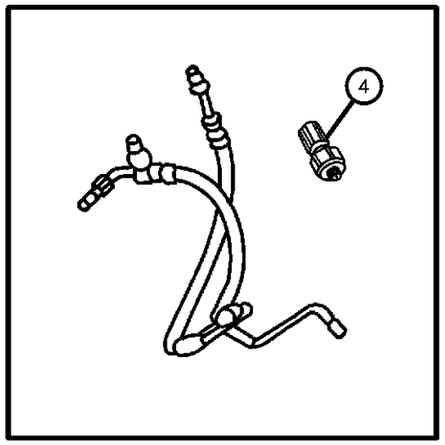

ITEM	PART NUMBER	QTY	LINE	SERIES	BODY	ENGINE	TRANS	TRIM	DESCRIPTION
1									SENDING UNIT, Oil Pressure
	56031005	1				EH0, EM0			
		1				EV0			
		1				EP0			
2									SWITCH, Neutral, Safety, Back Up
	56045489AA	1	5				DGT		
		1	1				DGK		
		1	5				DGK		
		1	1				DGT		
3									SWITCH, Back Up Lamp
	56007163	1	1			EP0	DDK		
		1	1			EH0, EV0	DBB		
		1	5			EH0, EV0	DBB		
4									SWITCH, Power Steering
	56041335AB	1	1			EV0			
		1	5			EV0			

DAKOTA (AN)

SERIES	LINE	BODY	ENGINE	TRANSMISSION
L = Dakota (All)	1 = Dakota 2WD	61 = Regular Cab (112 WB)	EPE = 2.5L 4 Cylinder	DGK = 4 Speed Automatic 42RE
	5 = Dakota 4WD	31 = Club Cab (131 WB)	EHC = 3.9L 6 Cylinder	DGT = 4 Speed Automatic 46RE
		84 = Quad Cab (131 WB)	EML = 5.0L 8 Cylinder	DDC = 5 Speed HD Manual
			EVA = 4.7L Magnum V8	DDK = 5 Speed HD Manual
			EP0 = All 2.5L	DG4 = Multispeed Automatic 45RFE
			EH0 = All 3.9L	DG0 = All Automatic Transmissions
			EM0 = All 5.9L	DBB = All Manual Transmissions
			EV0 = All 4.7L	

Switches - Body
Figure 8-815

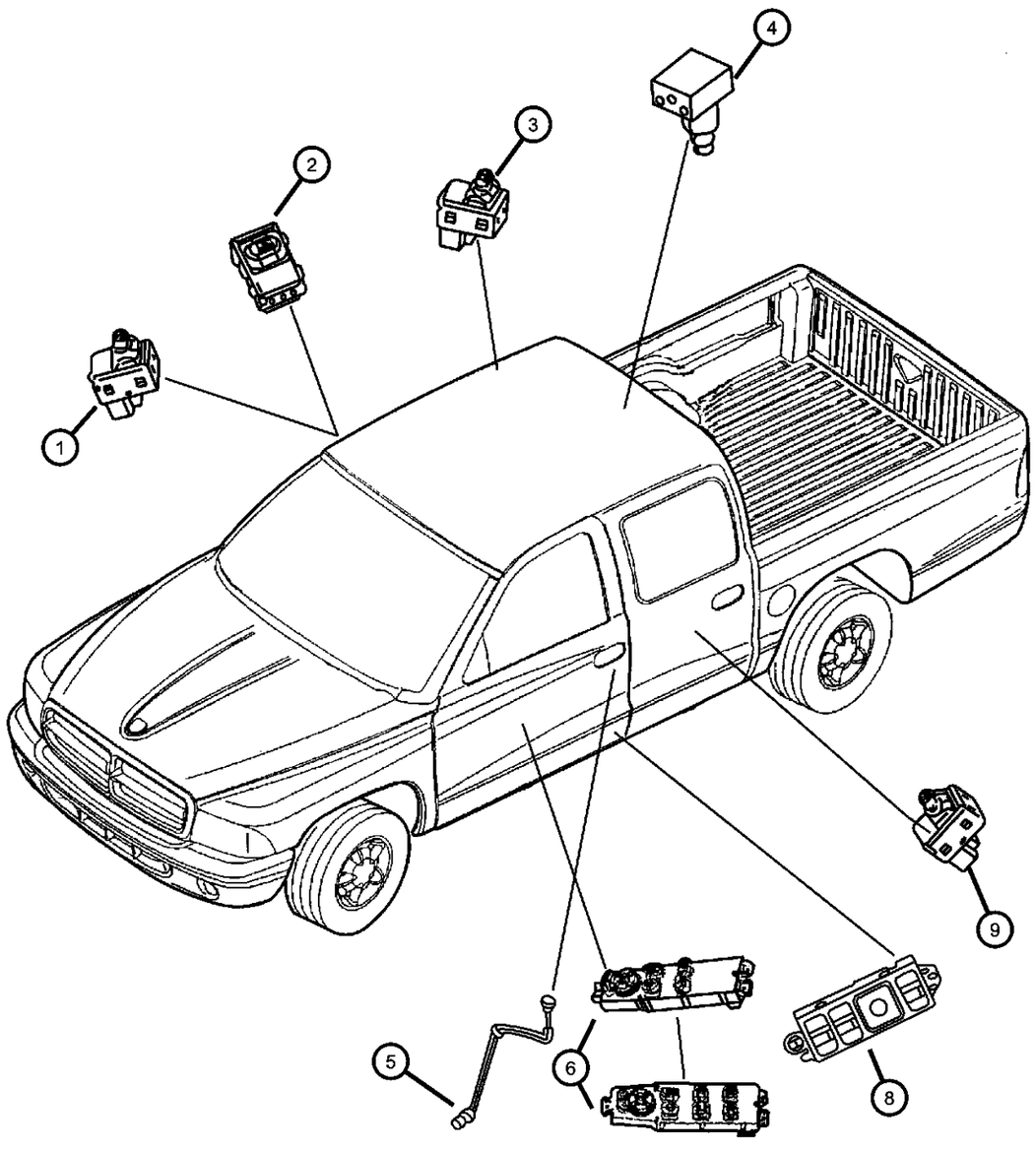

ITEM	PART NUMBER	QTY	LINE	SERIES	BODY	ENGINE	TRANS	TRIM	DESCRIPTION
1	56007695AC	1			31, 61				SWITCH, Power Window, Single Gang (Power Windows or Locks & Front or Rear Doors)
2	5GS19DX9AB	1			31, 61				SWITCH, Door Lock, [DV]
3	56007695AC	1			84				SWITCH, Power Window, Single Gang (Power Windows or Locks & Front or Rear Doors)
4	56007695AC	1							SWITCH, Reading Lamp, Serviced in Lamp assembly, (NOT SERVICED)
5									SWITCH, Central Locking
	56049276AA	1			31, 61				Right
	56049277AA	1			31, 61				Left
	56049288AA	1			84				Right
	56049289AA	1			84				Left
6									SWITCH, Window and Door Lock
	56045538AB	1			31, 61				
	5GU34DX9AA	1			84				
-7									BEZEL, Power Window/Door Lock Switch
	5GU28WL5AA	1			31, 61				[L5] [JPB,JPD], Right
		1			84				[L5] [JPB,JPD], Right
	5GU28XD-VAA	1			31, 61				[DV] [JPB,JPD], Right
		1			84				[DV] [JPB,JPD], Right
	5GU29WL5AA	1			31, 61				[L5] [GVB], Left
	5GU29XD-VAA	1			31, 61				[DV] [GVB], Left
	5GU33WL5AA	1			84				[L5] [GVB], Left
	5GU33XD-VAA	1			84				[DV] [GVB], Left
8									SWITCH, Seat
	04373848	1			31				
		1			84				
9	56007695AC	1			84				SWITCH, Power Window, Single Gang (Power Windows or Locks & Front or Rear Doors)
-10									BEZEL, Power Window Switch

DAKOTA (AN)

SERIES	LINE	BODY	ENGINE	TRANSMISSION
L = Dakota (All)	1 = Dakota 2WD 5 = Dakota 4WD	61 = Regular Cab (112 WB) 31 = Club Cab (131 WB) 84 = Quad Cab (131 WB)	EPE = 2.5L 4 Cylinder EHC = 3.9L 6 Cylinder EML = 5.0L 8 Cylinder EVA = 4.7L Magnum V8 EP0 = All 2.5L EH0 = All 3.9L EM0 = All 5.9L EV0 = All 4.7L	DGK = 4 Speed Automatic 42RE DGT = 4 Speed Automatic 46RE DDC = 5 Speed HD Manual DDK = 5 Speed HD Manual DG4 = Multispeed Automatic 45RFE DG0 = All Automatic Transmissions DBB = All Manual Transmissions

Switches - Body
Figure 8-815

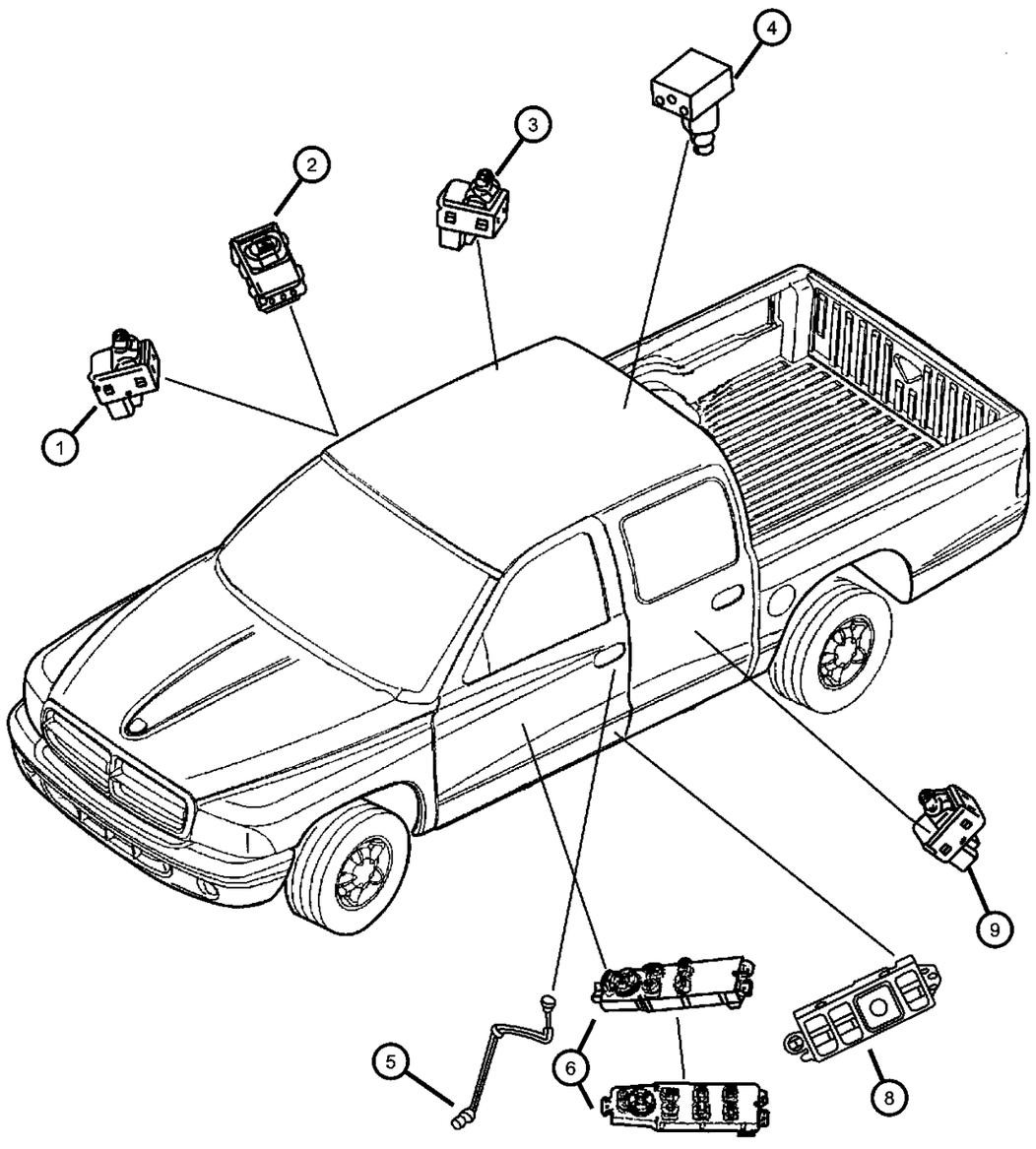

ITEM	PART NUMBER	QTY	LINE	SERIES	BODY	ENGINE	TRANS	TRIM	DESCRIPTION
	5GU30WL5AA	1			84				[L5] Single Gang (Power Windows or Locks & Front or Rear Doors), Right Rear
	5GU30XD-VAA	1			84				[DV] Single Gang (Power Windows or Locks & Front or Rear Doors), Right Rear
	5GU31WL5AA	1			84				[L5] Single Gang (Power Windows or Locks & Front or Rear Doors), Left Rear
	5GU31XD-VAA	1			84				[DV] Single Gang (Power Windows or Locks & Front or Rear Doors), Left Rear

DAKOTA (AN)

SERIES	LINE	BODY	ENGINE	TRANSMISSION
L = Dakota (All)	1 = Dakota 2WD	61 = Regular Cab (112 WB)	EPE = 2.5L 4 Cylinder	DGK = 4 Speed Automatic 42RE
	5 = Dakota 4WD	31 = Club Cab (131 WB)	EHC = 3.9L 6 Cylinder	DGT = 4 Speed Automatic 46RE
		84 = Quad Cab (131 WB)	EML = 5.0L 8 Cylinder	DDC = 5 Speed HD Manual
			EVA = 4.7L Magnum V8	DDK = 5 Speed HD Manual
			EP0 = All 2.5L	DG4 = Multispeed Automatic 45RFE
			EH0 = All 3.9L	DG0 = All Automatic Transmissions
			EM0 = All 5.9L	DBB = All Manual Transmissions
			EV0 = All 4.7L	

Horn & Mounting
Figure 8-911

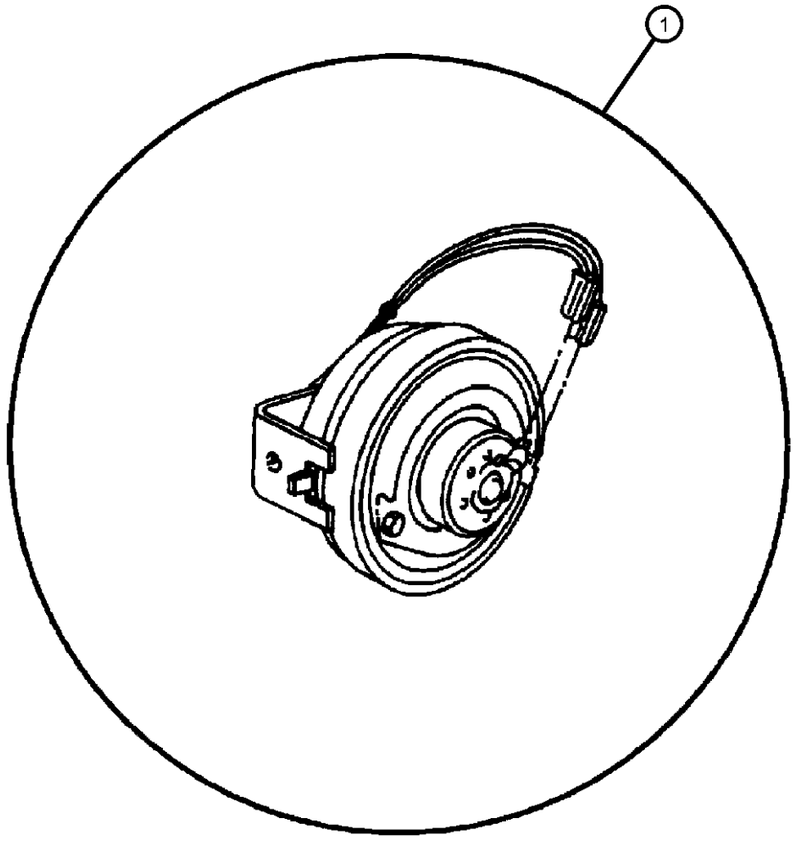

ITEM	PART NUMBER	QTY	LINE	SERIES	BODY	ENGINE	TRANS	TRIM	DESCRIPTION
1	56043073AC	1							HORN AND BRACKET, Dual

DAKOTA (AN)

SERIES	LINE	BODY	ENGINE	TRANSMISSION
L = Dakota (All)	1 = Dakota 2WD	61 = Regular Cab (112 WB)	EPE = 2.5L 4 Cylinder	DGK = 4 Speed Automatic 42RE
	5 = Dakota 4WD	31 = Club Cab (131 WB)	EHC = 3.9L 6 Cylinder	DGT = 4 Speed Automatic 46RE
		84 = Quad Cab (131 WB)	EML = 5.0L 8 Cylinder	DDC = 5 Speed HD Manual
			EVA = 4.7L Magnum V8	DDK = 5 Speed HD Manual
			EP0 = All 2.5L	DG4 = Multispeed Automatic 45RFE
			EH0 = All 3.9L	DG0 = All Automatic Transmissions
			EM0 = All 5.9L	DBB = All Manual Transmissions
			EV0 = All 4.7L	

Battery Tray & Cables
Figure 8-1011

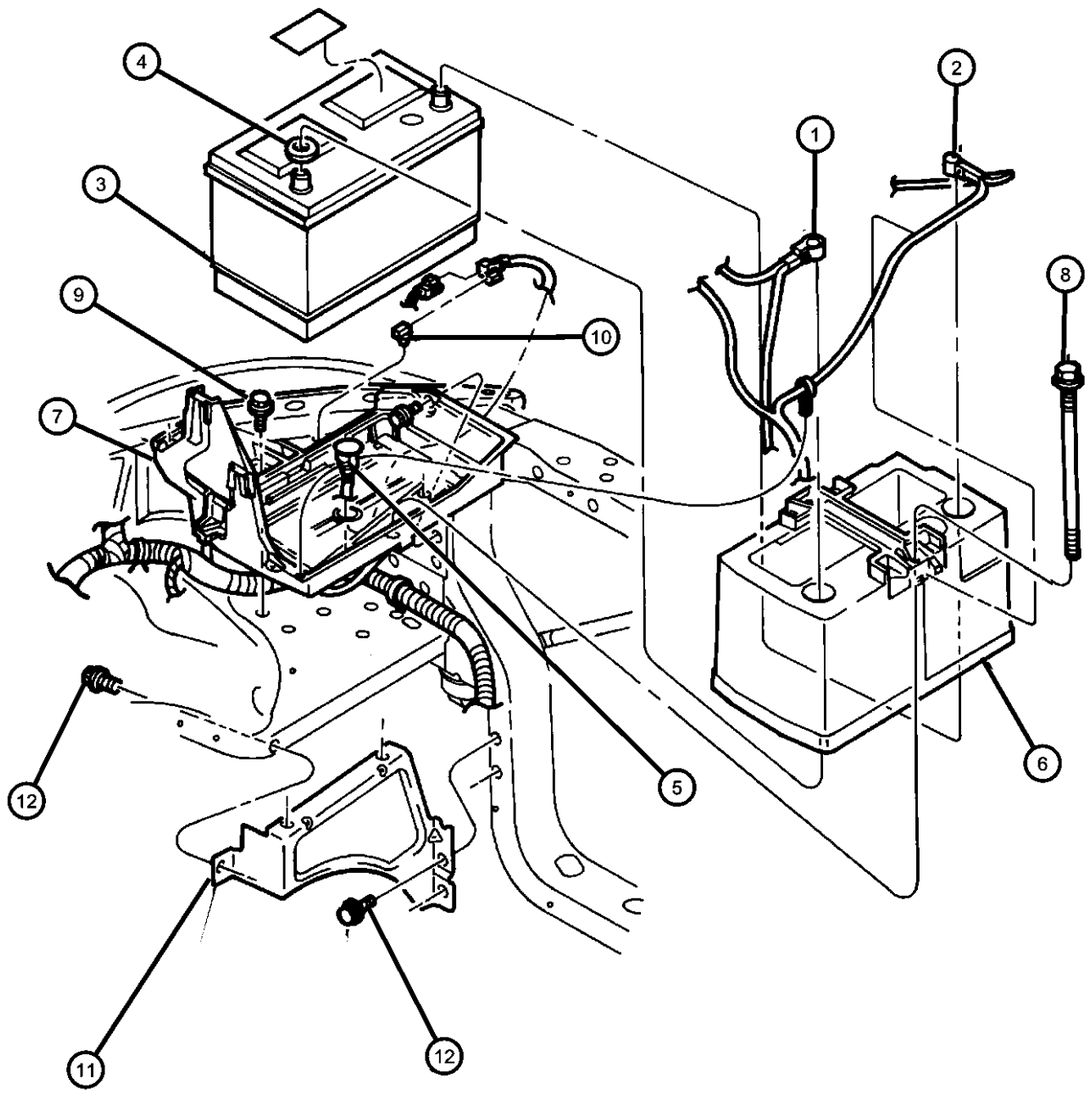

ITEM	PART NUMBER	QTY	LINE	SERIES	BODY	ENGINE	TRANS	TRIM	DESCRIPTION
Notes:									
[EP0]=2.5L Engine									
[EH0]=3.9L Engine									
[EM0]=5.9L Engine									
[EV0]=4.7L Engine									
1									CABLE, Battery Positive
	56018811AH	1				EP0			
	56018818AI	1	1			EM0			
	56020393AI	1	5			EH0, EM0			
	56045287AJ	1	1			EH0			
	56045627AF	1	1			EV0			
	56045628AF	1	5			EV0			
2	56049047AB	1				EP0			CABLE, Battery Negative
3									BATTERY, Storage
	04713921	1							[BCE]
	NAS27700EX								Mopar NASCAR Battery
	BAUNV34650								Mopar Universal Battery
	04713923	1							[BCQ]
	BAUNV34650								Mopar Universal Battery
	NAS27700EX								Mopar NASCAR Battery
4	04713923	1							WASHER, Battery Terminal, (NOT SERVICED),
5	56027332	1							SENSOR, Battery Temperature
6	55256138AD	1							COVER, Battery
7	55255047AF	1							TRAY, Battery
	BA027750EX								Mopar Power Pro 6
	BA078770EX								Mopar Power Pro 7
	NAS27700EX								Mopar NASCAR Battery
	BA027600EX								Mopar Power Pro 5
	56028375AB								Mopar Power Pro 7
	05019837AA								Mopar Power Pro 7
	0VU01205								Repair Battery Terminal End Top Post (Ten Per Box)
	0VU01207								Repair Battery Terminal End Side Post (Ten Per Box)
8	55235142	2							STUD, Battery Hold Down

DAKOTA (AN)

SERIES	LINE	BODY	ENGINE	TRANSMISSION
L = Dakota (All)	1 = Dakota 2WD	61 = Regular Cab (112 WB)	EPE = 2.5L 4 Cylinder	DGK = 4 Speed Automatic 42RE
	5 = Dakota 4WD	31 = Club Cab (131 WB)	EHC = 3.9L 6 Cylinder	DGT = 4 Speed Automatic 46RE
		84 = Quad Cab (131 WB)	EML = 5.0L 8 Cylinder	DDC = 5 Speed HD Manual
			EVA = 4.7L Magnum V8	DDK = 5 Speed HD Manual
			EP0 = All 2.5L	DG4 = Multispeed Automatic 45RFE
			EH0 = All 3.9L	DG0 = All Automatic Transmissions
			EM0 = All 5.9L	DBB = All Manual Transmissions
			EV0 = All 4.7L	

Battery Tray & Cables
Figure 8-1011

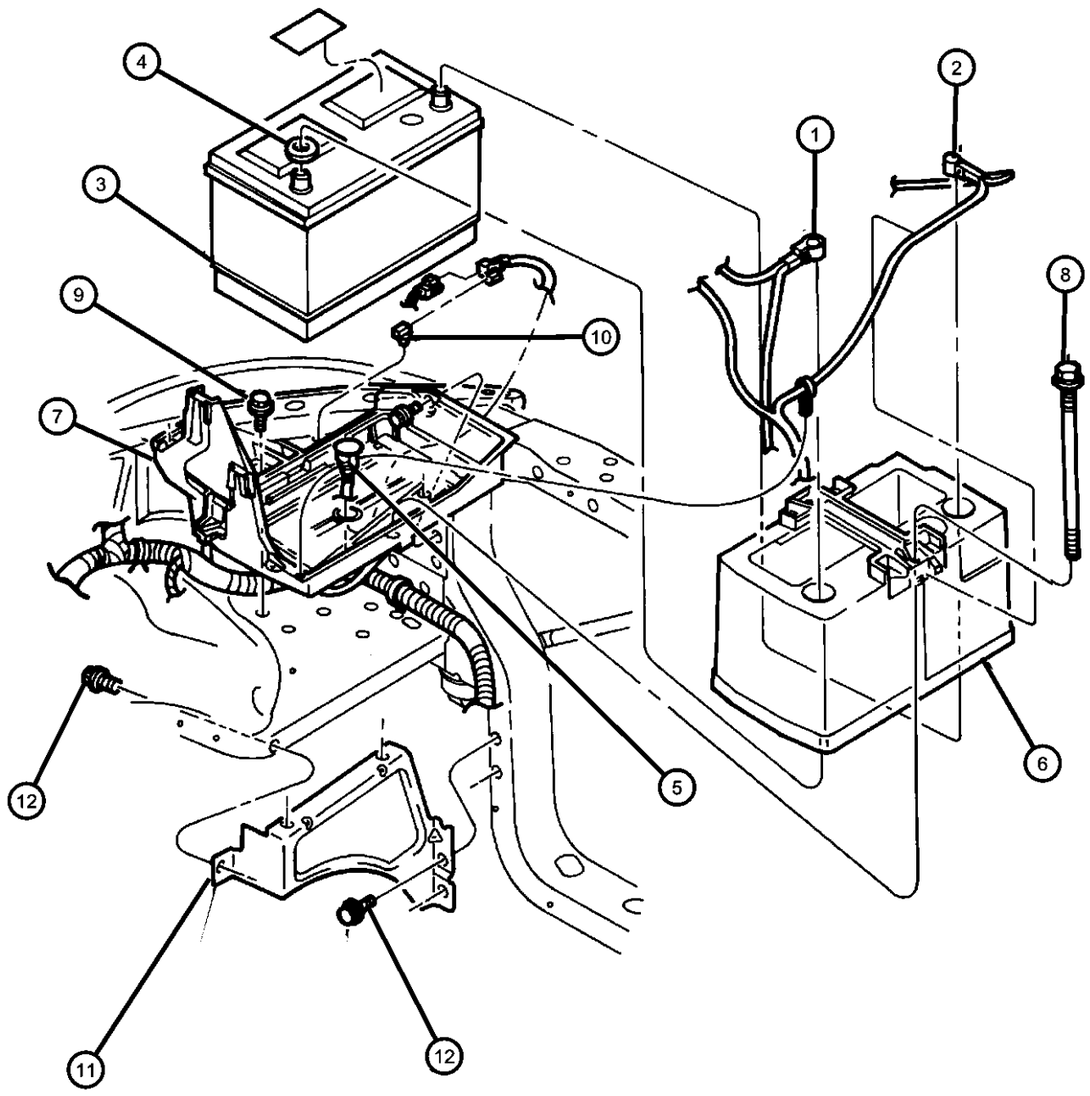

ITEM	PART NUMBER	QTY	LINE	SERIES	BODY	ENGINE	TRANS	TRIM	DESCRIPTION
9	55235142	2							SCREW AND WASHER, Hex Head Tapping, M8x1.25x26, (NOT SERVICED)
10	56021384	2							CLIP, Wiring
11	55256234	1							BRACKET, Battery Tray
12	06502282	1							SCREW, Hex Head, M8x1.25x30
-13	56045347AA	1	1			EH0, EM0			BRACKET, Electrical Connectors, Clip Mounting

DAKOTA (AN)

SERIES	LINE	BODY	ENGINE	TRANSMISSION
L = Dakota (All)	1 = Dakota 2WD	61 = Regular Cab (112 WB)	EPE = 2.5L 4 Cylinder	DGK = 4 Speed Automatic 42RE
	5 = Dakota 4WD	31 = Club Cab (131 WB)	EHC = 3.9L 6 Cylinder	DGT = 4 Speed Automatic 46RE
		84 = Quad Cab (131 WB)	EML = 5.0L 8 Cylinder	DDC = 5 Speed HD Manual
			EVA = 4.7L Magnum V8	DDK = 5 Speed HD Manual
			EP0 = All 2.5L	DG4 = Multispeed Automatic 45RFE
			EH0 = All 3.9L	DG0 = All Automatic Transmissions
			EM0 = All 5.9L	DBB = All Manual Transmissions
			EV0 = All 4.7L	

Lamp - Front End
Figure 8-1131

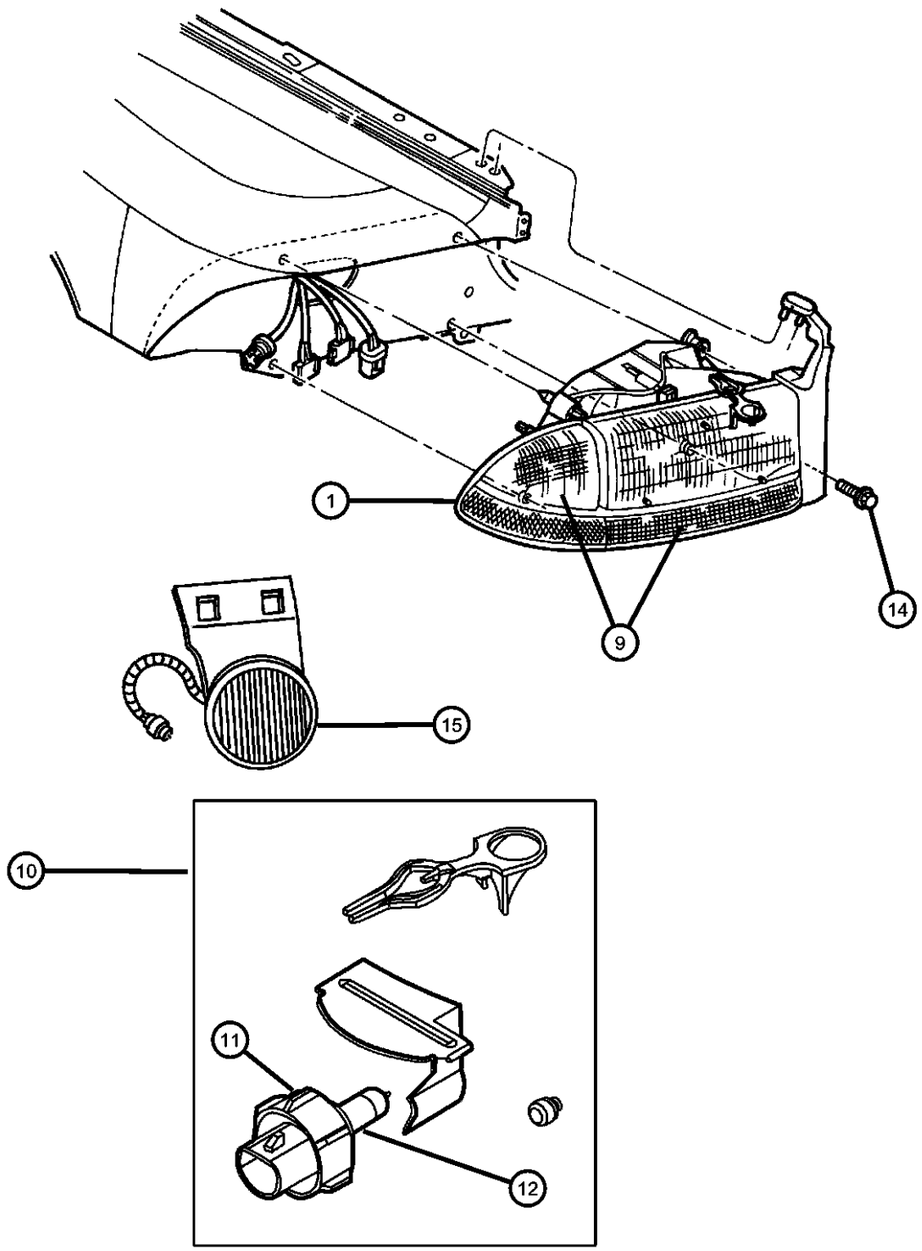

ITEM	PART NUMBER	QTY	LINE	SERIES	BODY	ENGINE	TRANS	TRIM	DESCRIPTION
1									LAMP, Headlamp Park And Turn
	55055110AH	1							Right
	55055111AH	1							Left
-2	05288612	1							SOCKET, Side Marker
-3	04399599	1							SEAL
-4	L0000168	2							BULB, 168
-5	04882728	1							SCREW
-6	04882723	1							RETAINER, Headlamp Welt
-7									WELT, Headlamp To Grille
	04882724	1							
	04882725	1							Left
-8	04882727	1							RETAINER, Headlamp Receptical
9									LAMP, Front Combination
	55055172AD	1							Right
	55055173AD	1							Left
10									HEADLAMP
	55055170AE	1							Right
	55055171AE	1							Left
11	55077046AA	1							RETAINER, Headlamp Bulb
12	L0009007QL	1							BULB, Headlamp
-13	04805147	1							VENT, Headlamp
14	06504289	6							SCREW, Hex Head
15	55077320AB	2							LAMP, Fog
-16	L0000898	2							BULB, Fog Lamp, 37 1/2 WATT
-17									BRACKET, Fog Lamp
	55077548AA	1							Right
	55077549AA	1							Left

DAKOTA (AN)

SERIES	LINE	BODY	ENGINE	TRANSMISSION
L = Dakota (All)	1 = Dakota 2WD	61 = Regular Cab (112 WB)	EPE = 2.5L 4 Cylinder	DGK = 4 Speed Automatic 42RE
	5 = Dakota 4WD	31 = Club Cab (131 WB)	EHC = 3.9L 6 Cylinder	DGT = 4 Speed Automatic 46RE
		84 = Quad Cab (131 WB)	EML = 5.0L 8 Cylinder	DDC = 5 Speed HD Manual
			EVA = 4.7L Magnum V8	DDK = 5 Speed HD Manual
			EP0 = All 2.5L	DG4 = Multispeed Automatic 45RFE
			EH0 = All 3.9L	DG0 = All Automatic Transmissions
			EM0 = All 5.9L	DBB = All Manual Transmissions
			EV0 = All 4.7L	

AR = use ase required - = Non illustrrated part

Lamp - Rear End
Figure 8-1141

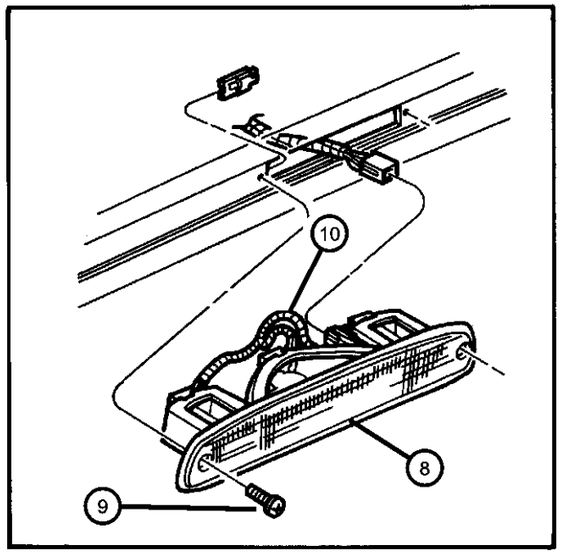

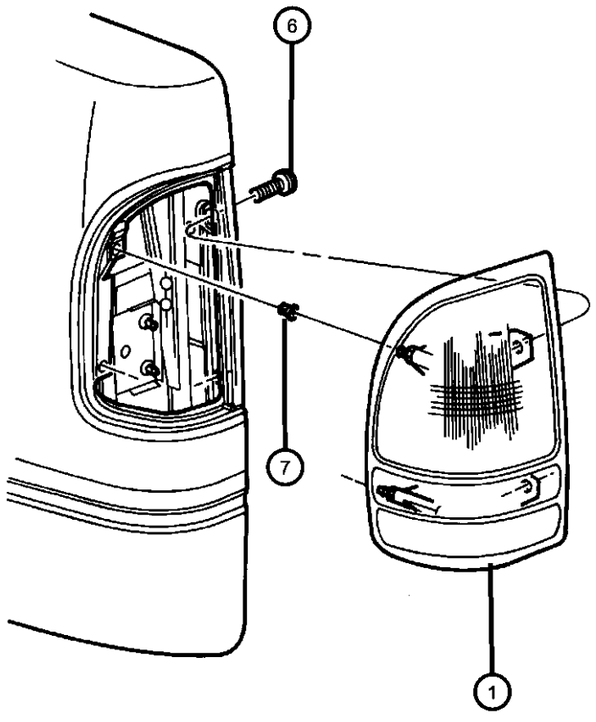

ITEM	PART NUMBER	QTY	LINE	SERIES	BODY	ENGINE	TRANS	TRIM	DESCRIPTION
1									LAMP, Tail Stop Backup
	55055112	1							Right
	55055113	1							Left
-2	04523105	1							SOCKET, Cornering Lamp
-3	04523108	1							SOCKET, Park, Turn, and Side Lamp, Tail Lamp Socket
-4	04399599	1							SEAL
-5	06032031	2							NUT, Spring, .19-16
6	06035455	4							SCREW, Tapping, .19-16x.625
7	06504072	4							CLIP, Open Round
8									LAMP, High Mounted Stop
	55056202AB	1							without Cargo Lamp
	55056203AB	1							with Cargo Lamp
9	55056203AB	1							SCREW, Oval Head, .164-18x.750 HD #6, (NOT SERVICED),
10									WIRING, High Mounted Stop Lamp
	55055257	1							without Cargo Lamp
	55055258AB	1							With Cargo Lamp
-11	L000921E	1							BULB, 921
-12									LAMP, Licence Plate
	55055292	1							Without Chrome Step Bumper
	55055294	1							with Chrome Step Bumper

DAKOTA (AN)

SERIES	LINE	BODY	ENGINE	TRANSMISSION
L = Dakota (All)	1 = Dakota 2WD	61 = Regular Cab (112 WB)	EPE = 2.5L 4 Cylinder	DGK = 4 Speed Automatic 42RE
	5 = Dakota 4WD	31 = Club Cab (131 WB)	EHC = 3.9L 6 Cylinder	DGT = 4 Speed Automatic 46RE
		84 = Quad Cab (131 WB)	EML = 5.0L 8 Cylinder	DDC = 5 Speed HD Manual
			EVA = 4.7L Magnum V8	DDK = 5 Speed HD Manual
			EP0 = All 2.5L	DG4 = Multispeed Automatic 45RFE
			EH0 = All 3.9L	DG0 = All Automatic Transmissions
			EM0 = All 5.9L	DBB = All Manual Transmissions
			EV0 = All 4.7L	

Lamp - Dome - Courtesy - Reading
Figure 8-1151

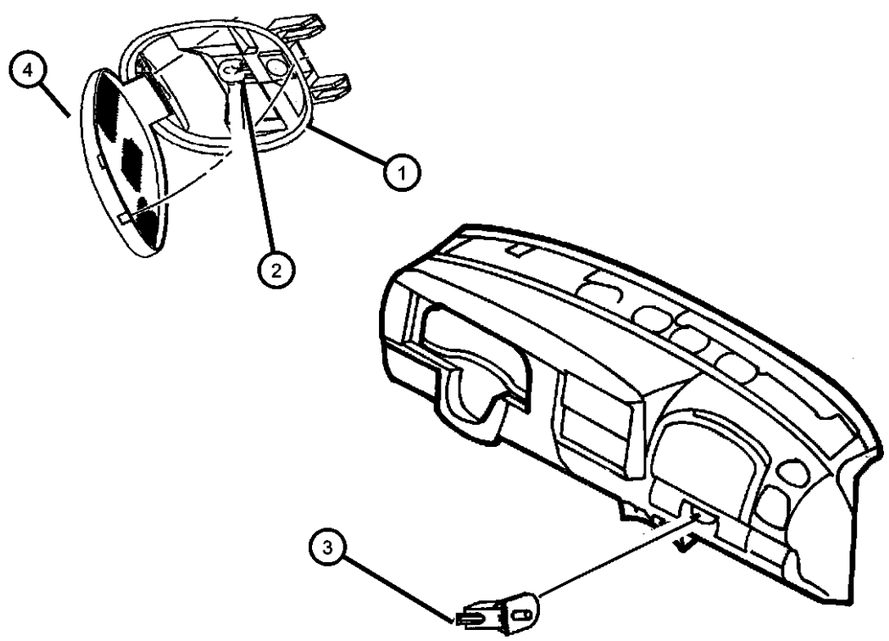

ITEM	PART NUMBER	QTY	LINE	SERIES	BODY	ENGINE	TRANS	TRIM	DESCRIPTION
1									LAMP, Dome
	0JV76TL2	1							Dome Lamp (Beige)
	5FW60TL2AB	1			31, 84				Map/Dome Reading (Beige)
2	L0000579	1							BULB, 579
3	04565022	1							SWITCH AND LAMP, Glove Box
4	56045073AB	1			31, 84				LENS, Dome Lamp, Used with 5FW60TL2AB Lamp

DAKOTA (AN)

SERIES	LINE	BODY	ENGINE	TRANSMISSION
L = Dakota (All)	1 = Dakota 2WD	61 = Regular Cab (112 WB)	EPE = 2.5L 4 Cylinder	DGK = 4 Speed Automatic 42RE
	5 = Dakota 4WD	31 = Club Cab (131 WB)	EHC = 3.9L 6 Cylinder	DGT = 4 Speed Automatic 46RE
		84 = Quad Cab (131 WB)	EML = 5.0L 8 Cylinder	DDC = 5 Speed HD Manual
			EVA = 4.7L Magnum V8	DDK = 5 Speed HD Manual
			EP0 = All 2.5L	DG4 = Multispeed Automatic 45RFE
			EH0 = All 3.9L	DG0 = All Automatic Transmissions
			EM0 = All 5.9L	DBB = All Manual Transmissions
			EV0 = All 4.7L	

Bulbs & Sockets
Figure 8-1196

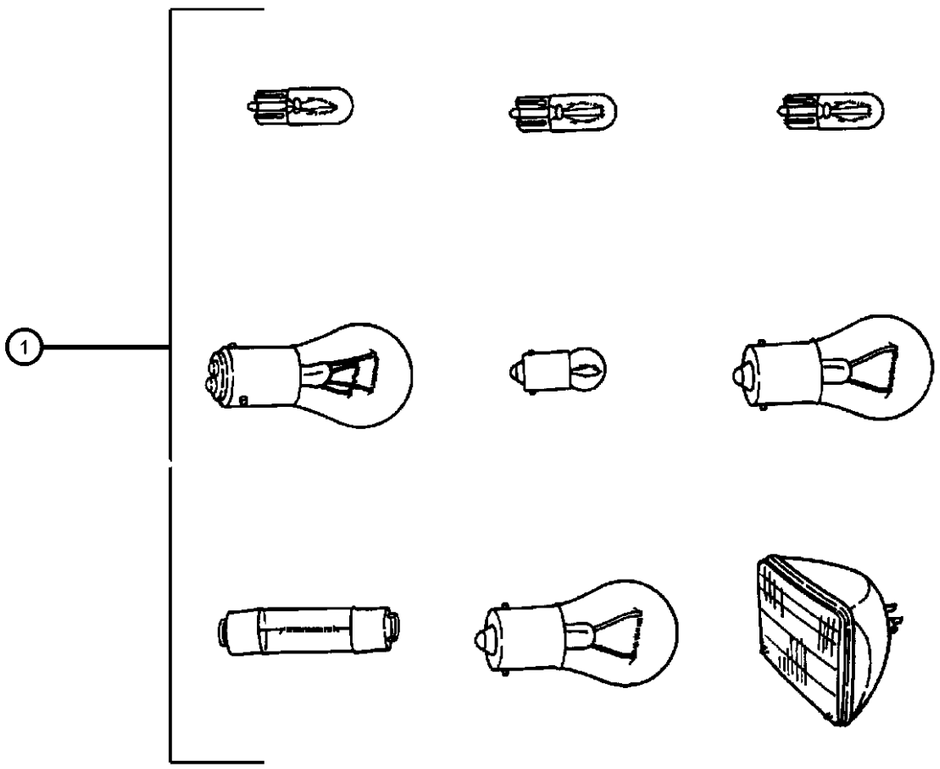

ITEM	PART NUMBER	QTY	LINE	SERIES	BODY	ENGINE	TRANS	TRIM	DESCRIPTION
1	L0003157	1							BULB, 3157
-2	L0000168	2							BULB, 168
-3	L0000579	1							BULB, 579
-4	L000921E	1							BULB, 921
-5	04523108	1							SOCKET, Park, Turn, and Side Lamp
-6									BULB AND SOCKET, Indicator Lamp
	05015731AA	1							Bulb is found in the back of headLamp switch #'s 56021675AB, 56021675AC, 56021676AB & 56021676AC. (Illuminates the foglamp indicator when the fog lights are on)
	05015732AA	1							Bulb is found in the back of headlamp switch #'s 56021673, 56021673AB, 56021674 & 56021674AB. (Illuminates the headlamp switch when the instrumentation lights are on)

DAKOTA (AN)

SERIES	LINE	BODY	ENGINE	TRANSMISSION
L = Dakota (All)	1 = Dakota 2WD	61 = Regular Cab (112 WB)	EPE = 2.5L 4 Cylinder	DGK = 4 Speed Automatic 42RE
	5 = Dakota 4WD	31 = Club Cab (131 WB)	EHC = 3.9L 6 Cylinder	DGT = 4 Speed Automatic 46RE
		84 = Quad Cab (131 WB)	EML = 5.0L 8 Cylinder	DDC = 5 Speed HD Manual
			EVA = 4.7L Magnum V8	DDK = 5 Speed HD Manual
			EP0 = All 2.5L	DG4 = Multispeed Automatic 45RFE
			EH0 = All 3.9L	DG0 = All Automatic Transmissions
			EM0 = All 5.9L	DBB = All Manual Transmissions
			EV0 = All 4.7L	

Wiring - Engine
Figure 8-1211

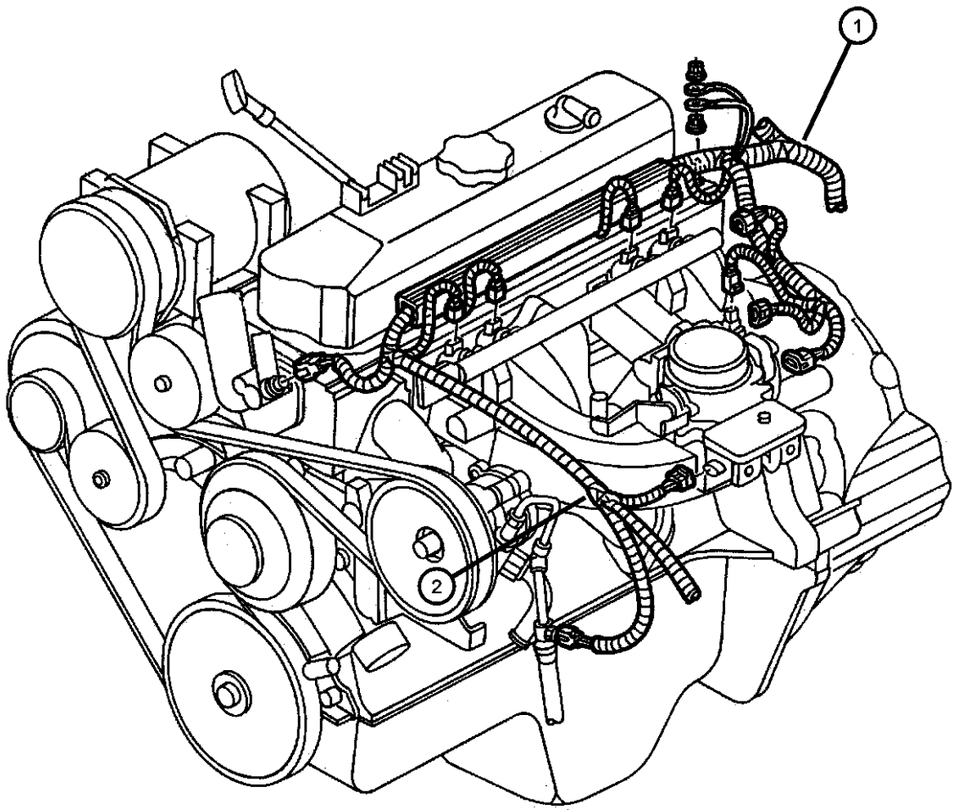

ITEM	PART NUMBER	QTY	LINE	SERIES	BODY	ENGINE	TRANS	TRIM	DESCRIPTION
EP0=2.5L Engine EH0=3.9L Engine EV0=4.7L Engine EM0=5.9L Engine DG0=Automatic Transmission DBB=Manual Transmission									
1									WIRING, Engine, with Transmission Wiring
	56049131AB	1				EP0	DBB		
	56049132AC	1			31, 61	EH0	DBB		Califonia includes negative battery wiring
		1			84	EH0	DBB		Califonia includes negative battery wiring
	56049133AC	1			31, 61	EH0	DG0		Califonia includes negative battery wiring
		1			84	EH0	DG0		Califonia includes negative battery wiring
	56049134AD	1			31, 61	EV0	DBB		Califonia includes negative battery wiring
		1			84	EV0	DBB		Califonia includes negative battery wiring
	56049135AD	1	5		31, 61	EV0	DG0		Califonia includes negative battery wiring
		1	5		84	EV0	DG0		Califonia includes negative battery wiring
	56049136AC	1			31, 61	EM0	DG0		Califonia includes negative battery wiring
		1			84	EM0	DG0		Califonia includes negative battery wiring
	56049137AC	1			84	EM0	DG0		Includes negative battery wiring
	56049139AD	1	1		31, 61	EV0	DG0		Includes negative battery wiring
		1	1		84	EV0	DG0		Includes negative battery wiring
	56049354AC	1			84	EH0	DBB		Includes negative battery wiring
	56049355AC	1			84	EH0	DG0		Includes negative battery wiring
	56049356AC	1			84	EV0	DBB		Includes negative battery wiring
	56049357AC	1			84	EV0	DG0		Includes negative battery wiring
2	00120522	2	1		31, 61	EP0			CLIP, Wrap Around
-3	04641780	1	1			EH0, EM0	DBB		STRAP, Tie

DAKOTA (AN)

SERIES	LINE	BODY	ENGINE	TRANSMISSION
L = Dakota (All)	1 = Dakota 2WD 5 = Dakota 4WD	61 = Regular Cab (112 WB) 31 = Club Cab (131 WB) 84 = Quad Cab (131 WB)	EPE = 2.5L 4 Cylinder EHC = 3.9L 6 Cylinder EML = 5.0L 8 Cylinder EVA = 4.7L Magnum V8 EP0 = All 2.5L EH0 = All 3.9L EM0 = All 5.9L EV0 = All 4.7L	DGK = 4 Speed Automatic 42RE DGT = 4 Speed Automatic 46RE DDC = 5 Speed HD Manual DDK = 5 Speed HD Manual DG4 = Multispeed Automatic 45RFE DG0 = All Automatic Transmissions DBB = All Manual Transmissions

Wiring - Headlamp / Dash
Figure 8-1311

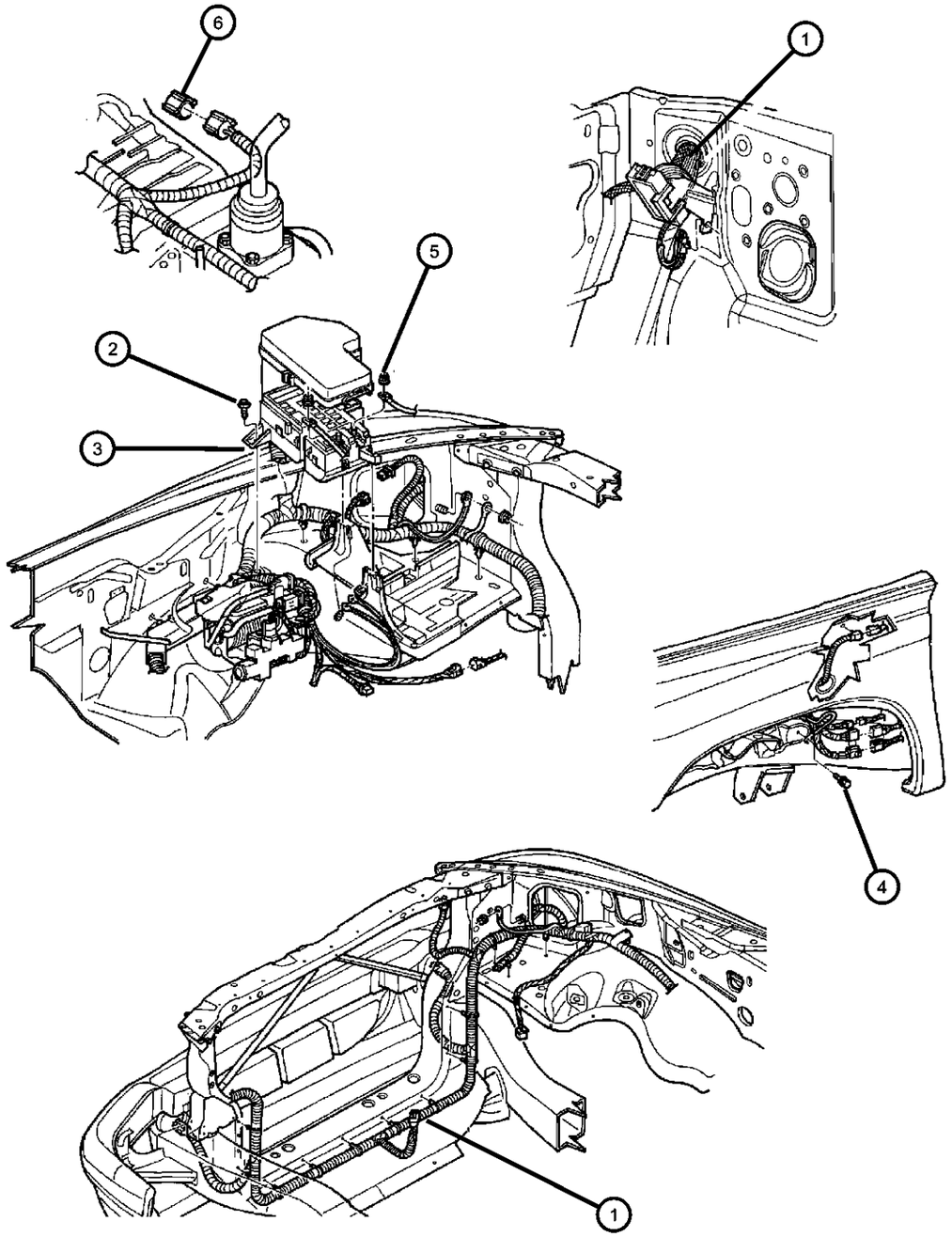

ITEM	PART NUMBER	QTY	LINE	SERIES	BODY	ENGINE	TRANS	TRIM	DESCRIPTION
EP0=2.5L Engine EH0=3.9L Engine EV0=4.7L Engine EM0=5.9L Engine									
1									WIRING, Headlamp to Dash
	56049237AD	1				EP0			Rear Wheel Anti Lock Brakes (Up to 10/09/01)
	56049237AE	1				EP0			Rear Wheel Anti Lock Brakes (10/09/01 & After)
	56049238AC	1				EP0			Four Wheel Anti Lock Brakes
	56049239AC	1	1			EH0, EM0			Rear Wheel Anti Lock Brakes
	56049240AC	1				EH0, EM0			Rear Wheel Anti Lock Brakes, with Fog Lamps, Rear Heated Window, Heated Mirrors
		1	5			EH0, EM0			Rear Wheel Anti Lock Brakes, with Fog Lamps, Rear Heated Window, Heated Mirrors
	56049241AE	1				EH0, EM0			Rear Wheel Anti Lock Brakes, with Trailer Tow
		1				EH0, EM0			Four Wheel Anti Lock Brakes
	56049242AC	1	1			EV0			Rear Wheel Anti Lock Brakes
	56049243AC	1				EV0			Rear Wheel Anti Lock Brakes, with Fog Lamps, Rear Heated Window, Heated Mirrors
	56049244AC	1				EV0			Four Wheel Anti Lock Brakes
2	06102132AA	6							SCREW, Hex Head, M6x1x20
3	06101809	1							NUT AND WASHER, Hex, M8x1.25
4	06101809	1							SCREW AND WASHER, Hex Head Tapping, M8x1.25x26, (NOT SERVICED)
5	06101809	1							NUT AND WASHER, M6x1.00, (NOT SERVICED)
6	06101809	1							INSULATOR, 4 Way Female, (NOT SERVICED)
-7	06101757	1							FUSIBLE LINK, 140 AMP

DAKOTA (AN)

SERIES	LINE	BODY	ENGINE	TRANSMISSION
L = Dakota (All)	1 = Dakota 2WD 5 = Dakota 4WD	61 = Regular Cab (112 WB) 31 = Club Cab (131 WB) 84 = Quad Cab (131 WB)	EPE = 2.5L 4 Cylinder EHC = 3.9L 6 Cylinder EML = 5.0L 8 Cylinder EVA = 4.7L Magnum V8 EP0 = All 2.5L EH0 = All 3.9L EM0 = All 5.9L EV0 = All 4.7L	DGK = 4 Speed Automatic 42RE DGT = 4 Speed Automatic 46RE DDC = 5 Speed HD Manual DDK = 5 Speed HD Manual DG4 = Multispeed Automatic 45RFE DG0 = All Automatic Transmissions DBB = All Manual Transmissions

Wiring - Instrument Panel
Figure 8-1411

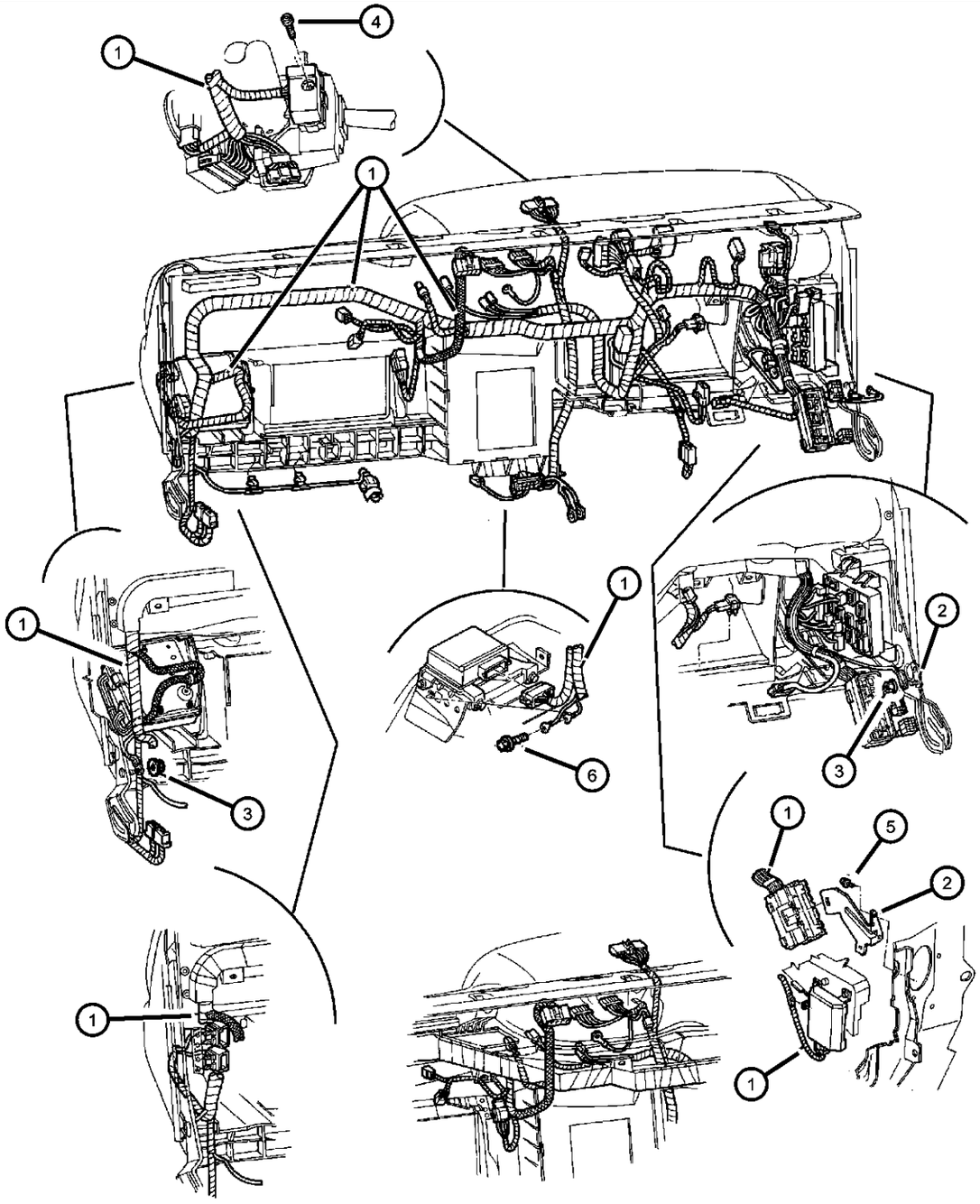

ITEM	PART NUMBER	QTY	LINE	SERIES	BODY	ENGINE	TRANS	TRIM	DESCRIPTION
1									WIRING, Instrument Panel
	56049057AD	1	1		31, 61				Up to12/17/01, Without 8 Speaker Infinity System, Sentry Key Theft Deterrent System, Audio Control Steering Wheel & without AM/FM Cassette Radio
	56049057AE	1	1		31, 61				12/17/01 & After, Without 8 Speaker Infinity System, Sentry Key Theft Deterrent System, Audio Control Steering Wheel & without AM/FM Cassette Radio
	56049058AC	1	1		31, 61				With Sentry Key Theft Deterrent System, without 8 Speaker Infinity System, AM/FM Cassette Radio & without Audio Control Steering Wheel
	56049059AC	1	1		31, 61				With 8 Speaker Infinity System, with or without Audio Control Steering Wheel & without Sentry Key Theft Deterrent System
	56049060AC	1	1		31, 61				With Sentry Key Theft Deterrent System, 8 Speaker Infinity System & with or without Audio Control Steering Wheel
	56049061AC	1	5		31, 61				Without 8 Speaker Infinity System, Sentry Key Theft Deterrent System, Audio Control Steering Wheel & without AM/FM Cassette Radio
	56049062AC	1	5		31, 61				With Sentry Key Theft Deterrent System, without 8 Speaker Infinity System, AM/FM Cassette Radio & without Audio Control Steering Wheel
	56049063AC	1	5		31, 61				With 8 Speaker Infinity System & with or without Audio Control Steering Wheel
	56049079AC	1	5		84				With 8 Speaker Infinity System & with or without Audio Control Steering Wheel
	56049080AC	1	1		84				With Sentry Key Theft Deterrent System, 8 Speaker Infinity System & with or without Audio Control Steering Wheel

DAKOTA (AN)

SERIES	LINE	BODY	ENGINE	TRANSMISSION
L = Dakota (All)	1 = Dakota 2WD	61 = Regular Cab (112 WB)	EPE = 2.5L 4 Cylinder	DGK = 4 Speed Automatic 42RE
	5 = Dakota 4WD	31 = Club Cab (131 WB)	EHC = 3.9L 6 Cylinder	DGT = 4 Speed Automatic 46RE
		84 = Quad Cab (131 WB)	EML = 5.0L 8 Cylinder	DDC = 5 Speed HD Manual
			EVA = 4.7L Magnum V8	DDK = 5 Speed HD Manual
			EP0 = All 2.5L	DG4 = Multispeed Automatic 45RFE
			EH0 = All 3.9L	DG0 = All Automatic Transmissions
			EM0 = All 5.9L	DBB = All Manual Transmissions
			EV0 = All 4.7L	

Wiring - Instrument Panel
Figure 8-1411

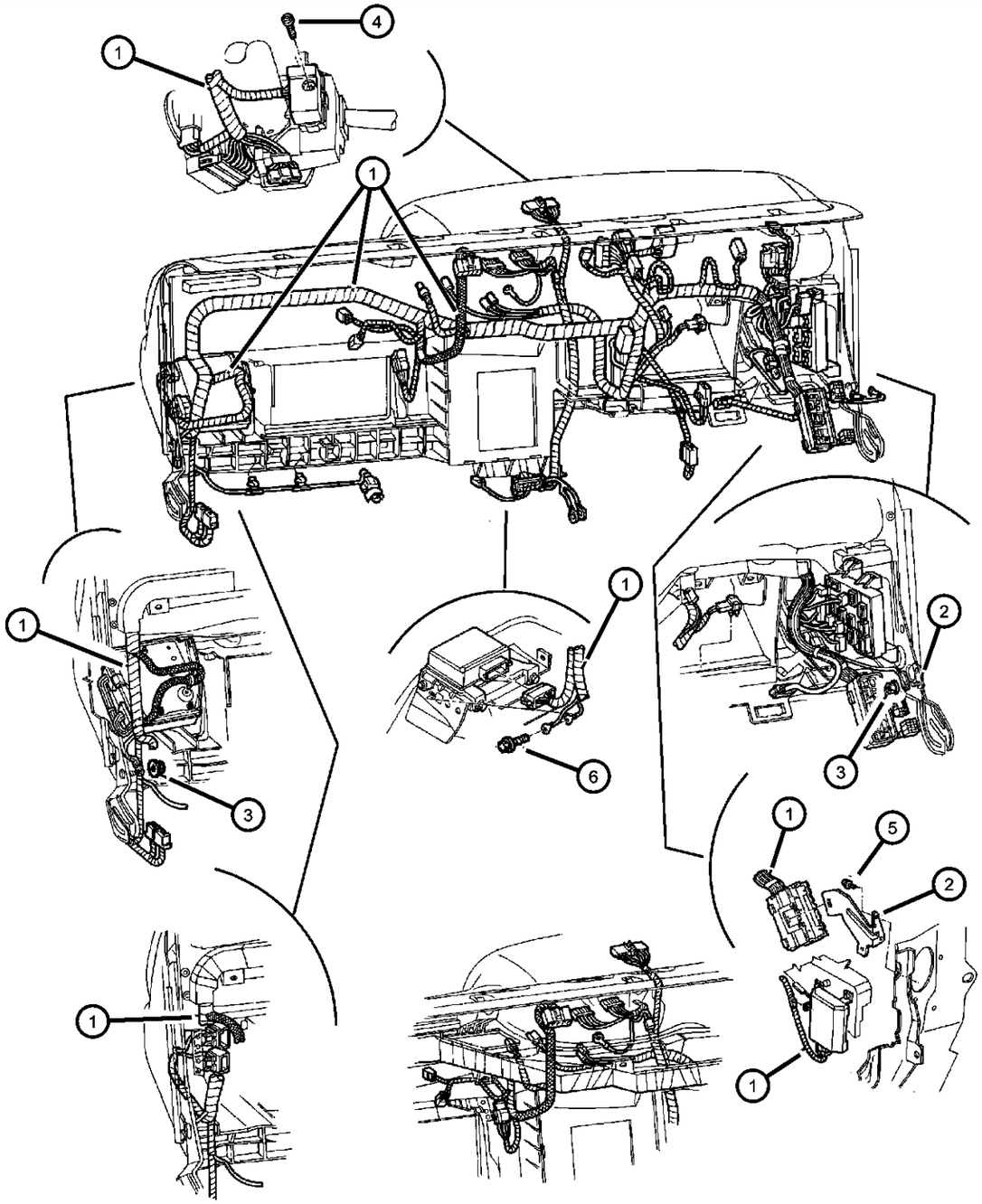

ITEM	PART NUMBER	QTY	LINE	SERIES	BODY	ENGINE	TRANS	TRIM	DESCRIPTION
	56049081AC	1	1		84				With 8 Speaker Infinity System, without Sentry Key Theft Deterrent System & without Audio Control Steering Wheel
	56049082AB	1	1		84				With Sentry Key Theft Deterrent System, without 8 Speaker Infinity System & without Audio Control Steering Wheel
	56049083AC	1	5		84				Without 8 Speaker Infinity System, Sentry Key Theft Deterrent System, Audio Control Steering Wheel & without AM/FM Cassette Radio
	56049084AC	1	5		84				With Sentry Key Theft Deterrent System, without 8 Speaker Infinity System, AM/FM Cassette Radio & without Audio Control Steering Wheel
	56049085AC	1	1		84				Without 8 Speaker Infinity System, Sentry Key Theft Deterrent System, Audio Control Steering Wheel & without AM/FM Cassette Radio
	56049375AC	1	5		84				With AM/FM Cassette Radio without 8 Speaker Infinity System & without Audio Control Steering Wheel
	56049390AD	1	1		84				Up to12/17/01, With AM/FM Cassette Radio without 8 Speaker Infinity System & without Audio Control Steering Wheel
	56049390AE	1	1		84				12/17/01 & After, With AM/FM Cassette Radio without 8 Speaker Infinity System & without Audio Control Steering Wheel
	56049391AC	1	1		31, 61				With AM/FM Cassette Radio without 8 Speaker Infinity System & without Audio Control Steering Wheel
	56049392AC	1	5		31, 61				With AM/FM Cassette Radio without 8 Speaker Infinity System & without Audio Control Steering Wheel

DAKOTA (AN)

SERIES	LINE	BODY	ENGINE	TRANSMISSION
L = Dakota (All)	1 = Dakota 2WD	61 = Regular Cab (112 WB)	EPE = 2.5L 4 Cylinder	DGK = 4 Speed Automatic 42RE
	5 = Dakota 4WD	31 = Club Cab (131 WB)	EHC = 3.9L 6 Cylinder	DGT = 4 Speed Automatic 46RE
		84 = Quad Cab (131 WB)	EML = 5.0L 8 Cylinder	DDC = 5 Speed HD Manual
			EVA = 4.7L Magnum V8	DDK = 5 Speed HD Manual
			EP0 = All 2.5L	DG4 = Multispeed Automatic 45RFE
			EH0 = All 3.9L	DG0 = All Automatic Transmissions
			EM0 = All 5.9L	DBB = All Manual Transmissions
			EV0 = All 4.7L	

Wiring - Instrument Panel
Figure 8-1411

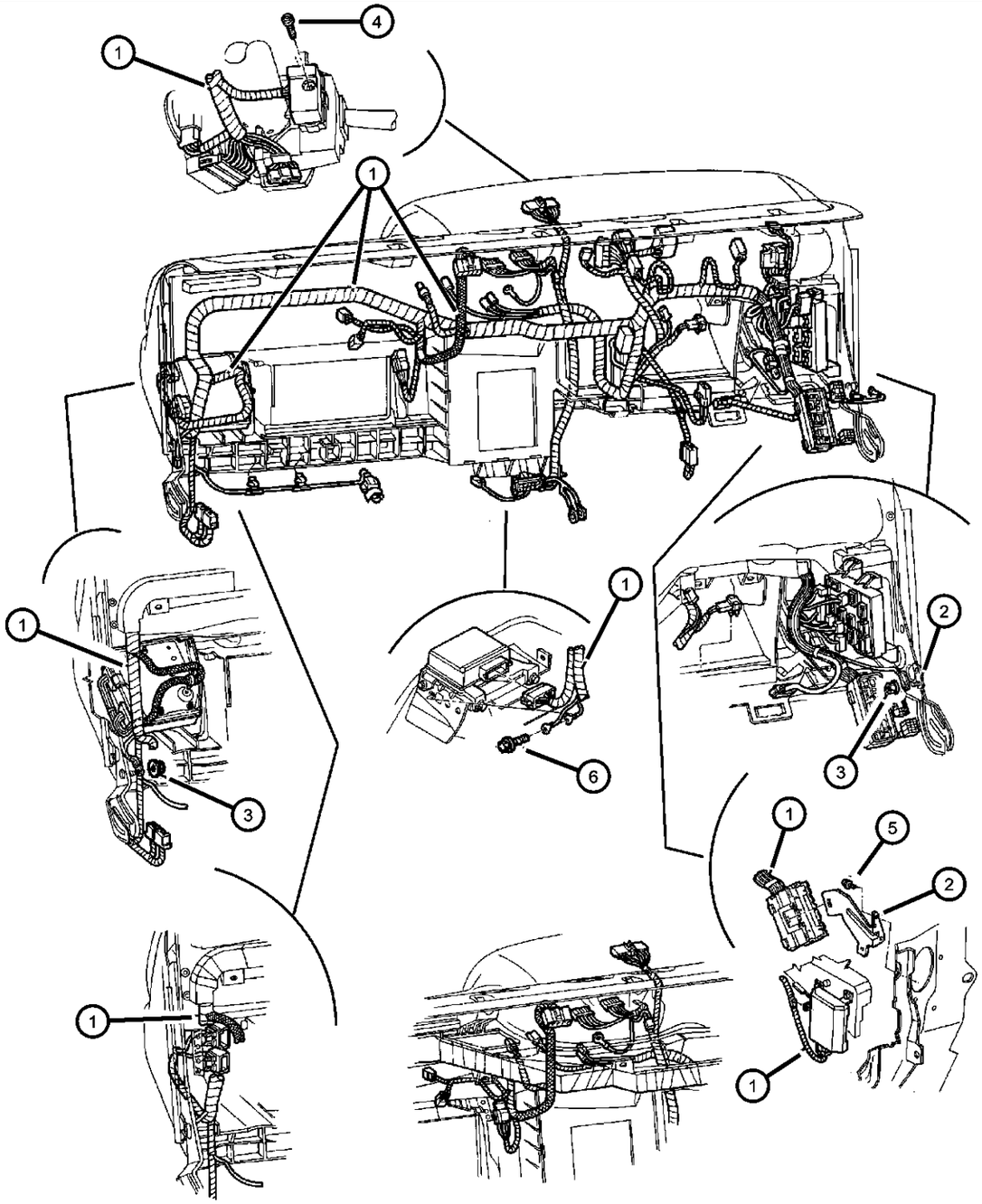

ITEM	PART NUMBER	QTY	LINE	SERIES	BODY	ENGINE	TRANS	TRIM	DESCRIPTION
2	56020131	1							BRACKET, Instrument Panel
3	56020131	1							NUT AND WASHER, M6x1.00, (NOT SERVICED)
4	56020131	1							SCREW, Hex Flange Head, .190-24X1.875, (NOT SERVICED)
5	56020131	1							SCREW, Tapping, .164-18x.625, (NOT SERVICED)
6	56020131	1							SCREW, Hex Head, .190-16x.625, (NOT SERVICED)
-7	56049114AB	1							FLASHER

DAKOTA (AN)

SERIES	LINE	BODY	ENGINE	TRANSMISSION
L = Dakota (All)	1 = Dakota 2WD	61 = Regular Cab (112 WB)	EPE = 2.5L 4 Cylinder	DGK = 4 Speed Automatic 42RE
	5 = Dakota 4WD	31 = Club Cab (131 WB)	EHC = 3.9L 6 Cylinder	DGT = 4 Speed Automatic 46RE
		84 = Quad Cab (131 WB)	EML = 5.0L 8 Cylinder	DDC = 5 Speed HD Manual
			EVA = 4.7L Magnum V8	DDK = 5 Speed HD Manual
			EP0 = All 2.5L	DG4 = Multispeed Automatic 45RFE
			EH0 = All 3.9L	DG0 = All Automatic Transmissions
			EM0 = All 5.9L	DBB = All Manual Transmissions
			EV0 = All 4.7L	

Wiring - Body & Accessory
Figure 8-1511

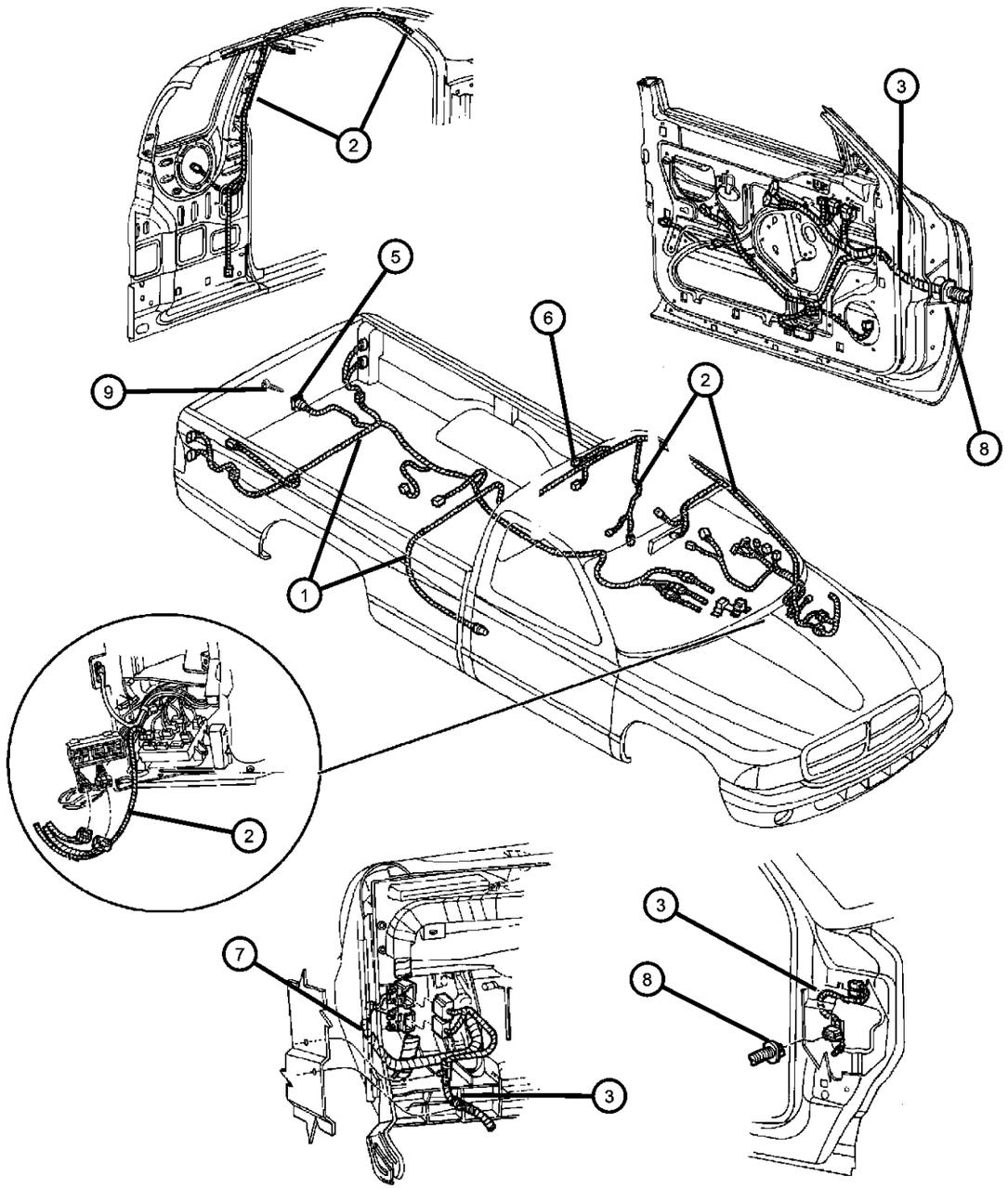

ITEM	PART NUMBER	QTY	LINE	SERIES	BODY	ENGINE	TRANS	TRIM	DESCRIPTION
Notes:									
[EG0]=All Automatic Transmissions									
1									WIRING, Chassis
	56019412AE	1			31, 84				Without Trailer Tow
	56019416AE	1			31, 84				With Trailer Tow
	56021124AE	1			61				With Trailer Tow
	56021125AE	1			61				Without Trailer Tow
2									WIRING, Body
	56049227AB	1			61				Without Full or Mini-Overhead Console & without Diver One Touch Power Window
	56049228AB	1			61				Without Full or Mini-Overhead Console & with Diver One Touch Power Window
		1			61				With Mini-Overhead Console & Diver One Touch Power Window
	56049229AB	1			61				With Full Overhead Console
	56049230AB	1			61				With Mini-Overhead Console & without Diver One Touch Power Window
	56049231AC	1			84				Without Overhead Console & without Diver One Touch Power Window
	56049232AC	1			84				Without Full Overhead Console & With Diver One Touch Power Window
	56049233AC	1			84				With Full Overhead Console
	56049234AB	1			31				Without Full or Mini-Overhead Console & without Diver One Touch Power Window
		1			31				With Mini-Overhead Console & without Diver One Touch Power Window
	56049235AB	1			31				Without Full or Mini-Overhead Console & with Diver One Touch Power Window
		1			31				With Mini-Overhead Console & Diver One Touch Power Window
	56049236AB	1			31				With Full Overhead Console
3									WIRING, Door

DAKOTA (AN)

SERIES	LINE	BODY	ENGINE	TRANSMISSION
L = Dakota (All)	1 = Dakota 2WD	61 = Regular Cab (112 WB)	EPE = 2.5L 4 Cylinder	DGK = 4 Speed Automatic 42RE
	5 = Dakota 4WD	31 = Club Cab (131 WB)	EHC = 3.9L 6 Cylinder	DGT = 4 Speed Automatic 46RE
		84 = Quad Cab (131 WB)	EML = 5.0L 8 Cylinder	DDC = 5 Speed HD Manual
			EVA = 4.7L Magnum V8	DDK = 5 Speed HD Manual
			EP0 = All 2.5L	DG4 = Multispeed Automatic 45RFE
			EH0 = All 3.9L	DG0 = All Automatic Transmissions
			EM0 = All 5.9L	DBB = All Manual Transmissions
			EV0 = All 4.7L	

Wiring - Body & Accessory
Figure 8-1511

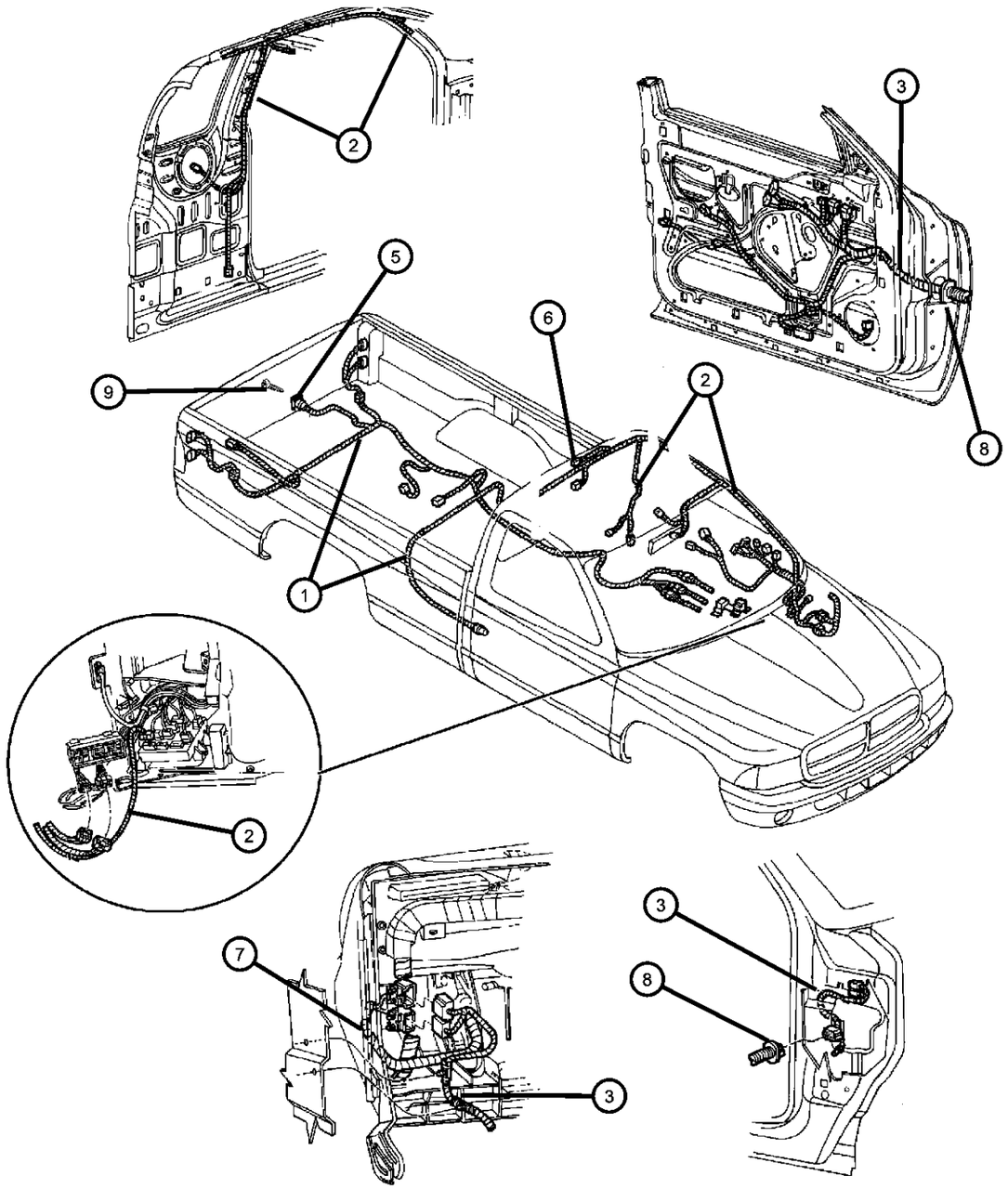

ITEM	PART NUMBER	QTY	LINE	SERIES	BODY	ENGINE	TRANS	TRIM	DESCRIPTION
	56021482AF	1			31, 61				With Power Mirrors, with or without Diver One Touch Power Window & without Security Alarm, Right
	56045304AF	1			84				With Power Windows, without Infinity Sound System & without Security Alarm, Right
	56045305AI	1			84				With Power Mirrors, with or without Diver One Touch Power Window & without Security Alarm, Left
	56045313AG	2			84				Without Power Mirrors, Diver One Touch Power Window & without Security Alarm, Right & Left
	56049106AA	1			31, 61				With Security Alarm, Right
	56049290AA	1			31, 61				With Security Alarm, Left
	56049291AA	1			31, 61				With Power Mirrors, with or without Diver One Touch Power Window & without Security Alarm, Left
	56049292AA	2			31, 61				Without Power Mirrors, Diver One Touch Power Window & without Security Alarm, Right & Left
-4									WIRING, Front Door
	56021184AJ	1			84				With Security, Right
	56021189AM	1			84				With Security, Left
	56045304AD	1			84				Without Security, Right
	56045305AG	1			84				Without Security, Left
5	56020143AD	1							WIRING, Trailer Tow, With Trailer Tow
6									WIRING, High Mounted Stop Lamp
	55055257	1							Without Cargo Lamp
	55055258AB	1							With Cargo Lamp
7	56018835	2							WIRING, Turn Signal and Back Up
8	56018835	2							GROMMET, Front Door, (NOT SERVICED)
9	56018835	2							SCREW, Tapping, .164-18x.625, (NOT SERVICED)

DAKOTA (AN)

SERIES	LINE	BODY	ENGINE	TRANSMISSION
L = Dakota (All)	1 = Dakota 2WD	61 = Regular Cab (112 WB)	EPE = 2.5L 4 Cylinder	DGK = 4 Speed Automatic 42RE
	5 = Dakota 4WD	31 = Club Cab (131 WB)	EHC = 3.9L 6 Cylinder	DGT = 4 Speed Automatic 46RE
		84 = Quad Cab (131 WB)	EML = 5.0L 8 Cylinder	DDC = 5 Speed HD Manual
			EVA = 4.7L Magnum V8	DDK = 5 Speed HD Manual
			EP0 = All 2.5L	DG4 = Multispeed Automatic 45RFE
			EH0 = All 3.9L	DG0 = All Automatic Transmissions
			EM0 = All 5.9L	DBB = All Manual Transmissions
			EV0 = All 4.7L	

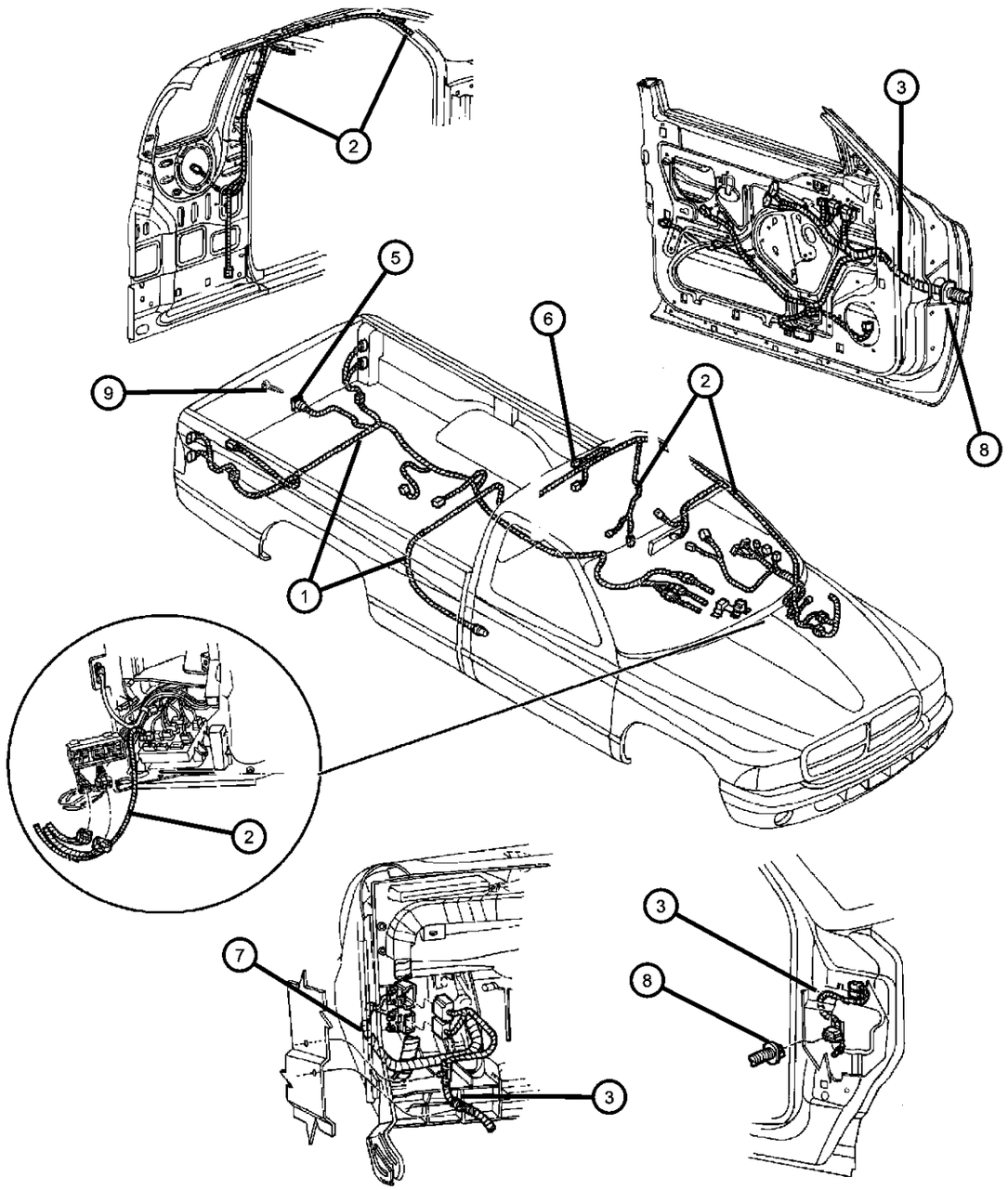

ITEM	PART NUMBER	QTY	LINE	SERIES	BODY	ENGINE	TRANS	TRIM	DESCRIPTION
-10	56038366AB	1							CONNECTOR, 7 Way, With Trailer Tow
-11	56021909AA	8			31, 61				GROMMET, Body Wiring
-12									WIRING, Power Seat
	56021335	1			31				
		1			84				
-13									WIRING, License Lamp
	56020624	1							Body Color
	56021598	1							Bright or Black Body Color
-14	05018974AA	1					DG0		WIRING, Lever to Switch
-15									WIRING, Steering Wheel
	55351173AA	1							Without Cruise Control
	55351174AA	1							With Cruise Control
	56045579AA	1							With Cruise Control & Radio Control Steering Wheel
-16									WIRING, Rear Door
	56045204AA	1			84				Right
	56045205AA	1			84				Left
	56045206AA	1			84				With Power Windows, Right
	56045207AA	1			84				With Power Windows, Left
-17	56045603AA	1							WIRING, A/C
-18									WIRING, Heater and A/C
	56045568AB	1							With A/C
	56045604AA	1							Without A/C

DAKOTA (AN)

SERIES	LINE	BODY	ENGINE	TRANSMISSION
L = Dakota (All)	1 = Dakota 2WD	61 = Regular Cab (112 WB)	EPE = 2.5L 4 Cylinder	DGK = 4 Speed Automatic 42RE
	5 = Dakota 4WD	31 = Club Cab (131 WB)	EHC = 3.9L 6 Cylinder	DGT = 4 Speed Automatic 46RE
		84 = Quad Cab (131 WB)	EML = 5.0L 8 Cylinder	DDC = 5 Speed HD Manual
			EVA = 4.7L Magnum V8	DDK = 5 Speed HD Manual
			EP0 = All 2.5L	DG4 = Multispeed Automatic 45RFE
			EH0 = All 3.9L	DG0 = All Automatic Transmissions
			EM0 = All 5.9L	DBB = All Manual Transmissions
			EV0 = All 4.7L	

Wiring Repair Packages
Figure 8-1605

ITEM	PART NUMBER	QTY	LINE	SERIES	BODY	ENGINE	TRANS	TRIM	DESCRIPTION
-1	05013930AD	1							WIRING PACKAGE, Underhood Connector Repair, For Electrical Connector Repair Information visit the World Wide Web at http://dto.vftis.com/mopar/dis-claimer.asp
-2									CLIP, Wiring
	56021384	1	1			EV0			Positive Battery Wiring
	56049374AA	1	5						Engine Wiring to Transfer Case
-3	05014757AD	1							MANUAL, Connector Repair
-4	04759236	1							PLUG, Wiring, 4 Way without Cruise
-5	04274258	AR							TAPE, Radio Connector, Foam
-6	05083235AA	1							WIRING PACKAGE, Underhood Connector Repair, Update Kit
-7									CLIP
	53008550	1	5				DG4		Trans wiring
		1	1				DG4		Trans wiring

For Electrical Connector Repair Information visit the World Wide Web at

http://dto.vftis.com/mopar/disclaimer.asp

DAKOTA (AN)

SERIES	LINE	BODY	ENGINE	TRANSMISSION
L = Dakota (All)	1 = Dakota 2WD	61 = Regular Cab (112 WB)	EPE = 2.5L 4 Cylinder	DGK = 4 Speed Automatic 42RE
	5 = Dakota 4WD	31 = Club Cab (131 WB)	EHC = 3.9L 6 Cylinder	DGT = 4 Speed Automatic 46RE
		84 = Quad Cab (131 WB)	EML = 5.0L 8 Cylinder	DDC = 5 Speed HD Manual
			EVA = 4.7L Magnum V8	DDK = 5 Speed HD Manual
			EP0 = All 2.5L	DG4 = Multispeed Automatic 45RFE
			EH0 = All 3.9L	DG0 = All Automatic Transmissions
			EM0 = All 5.9L	DBB = All Manual Transmissions
			EV0 = All 4.7L	

Spark Plugs - Cables - Coils
Figure 8-1906

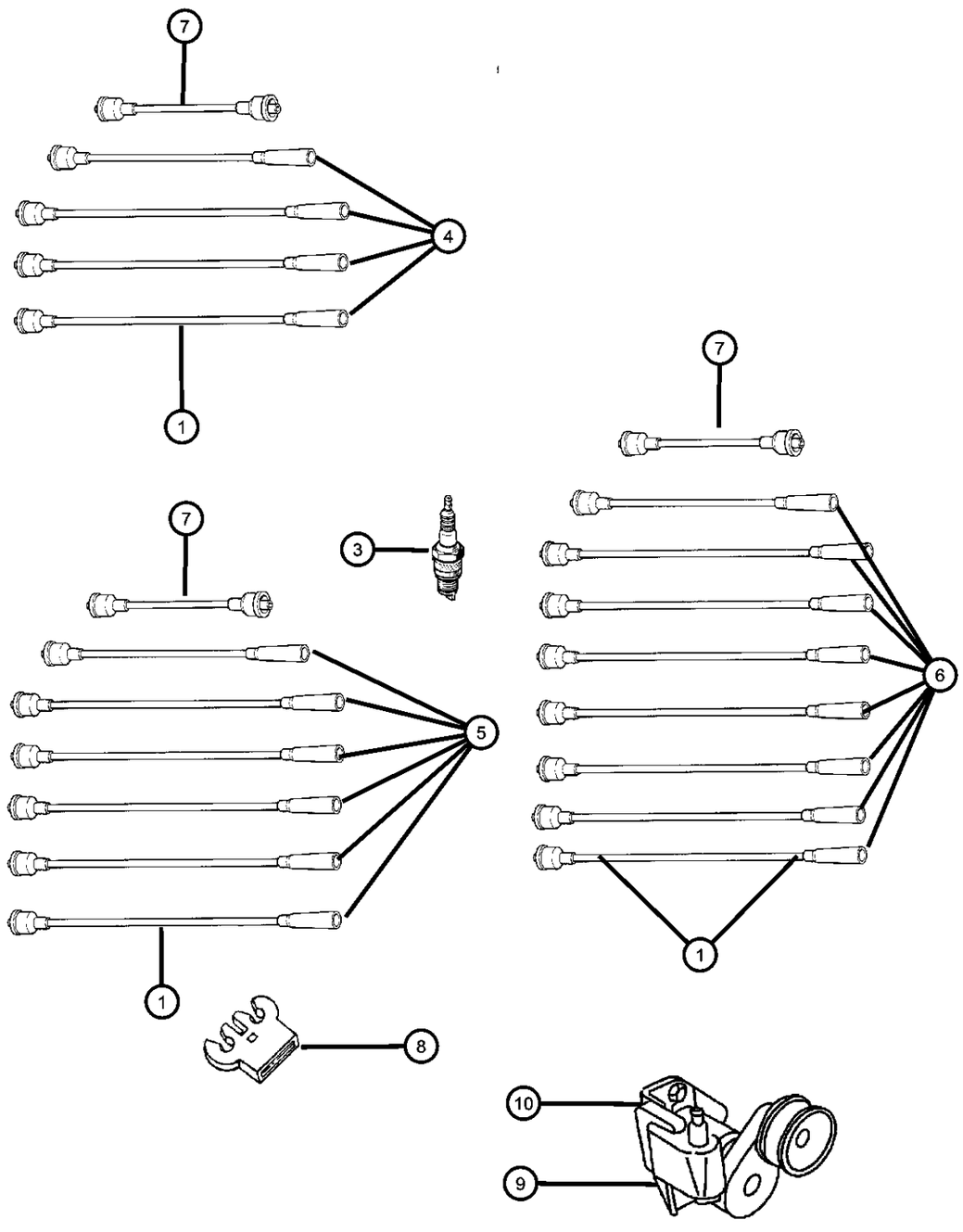

ITEM	PART NUMBER	QTY	LINE	SERIES	BODY	ENGINE	TRANS	TRIM	DESCRIPTION
EP0=2.5L Engine EH0=3.9L Engine EM0=5.9L Engine EV0=4.7L Engine									
1									CABLE PACKAGE, Ignition
	04728037AD	1				EH0			
	SPC39602AA								Mopar Tune Up Kit (Contains Cap Rotor and Spark Plug Wires)
	SPW08037AA								Mopar V-Line Alternative Part
	04728038AE	1				EM0			
	SPC52590AA								Mopar Tune Up Kit (Contains Cap Rotor and Spark Plug Wires)
	SPW08038AA								Mopar V-Line Alternative Part
-2	05017058AA	1				EP0			CABLE, Ignition
3									SPARK PLUG
	SP000ZFR5N	4				EP0			
	SP0RC12LC4	6				EH0			
		8				EM0			
	SPRC12MCC4	8				EV0			
4									CABLE, Ignition
	56041852AA	1				EP0			[#3]
	SPW07058AA								Mopar V-Line Alternative Part
	56041853AA	1				EP0			[#4]
	56041854AA	1				EP0			[#2]
	56041855AA	1				EP0			[#1]
5									CABLE, Ignition
	56028255AA	1				EH0			[#1]
	56028256AA	1				EH0			[#2]
	56028257AA	1				EH0			[#3]
	56028258AA	1				EH0			[#4]
	56028259AA	1				EH0			[#5]
	56028277AB	1				EH0			[#6]
6									CABLE, Ignition
	56028255AA	1				EM0			[#6]
	56028256AA	3				EM0			[#1,2,4]

DAKOTA (AN)

SERIES	LINE	BODY	ENGINE	TRANSMISSION
L = Dakota (All)	1 = Dakota 2WD 5 = Dakota 4WD	61 = Regular Cab (112 WB) 31 = Club Cab (131 WB) 84 = Quad Cab (131 WB)	EPE = 2.5L 4 Cylinder EHC = 3.9L 6 Cylinder EML = 5.0L 8 Cylinder EVA = 4.7L Magnum V8 EP0 = All 2.5L EH0 = All 3.9L EM0 = All 5.9L EV0 = All 4.7L	DGK = 4 Speed Automatic 42RE DGT = 4 Speed Automatic 46RE DDC = 5 Speed HD Manual DDK = 5 Speed HD Manual DG4 = Multispeed Automatic 45RFE DG0 = All Automatic Transmissions DBB = All Manual Transmissions

Spark Plugs - Cables - Coils
Figure 8-1906

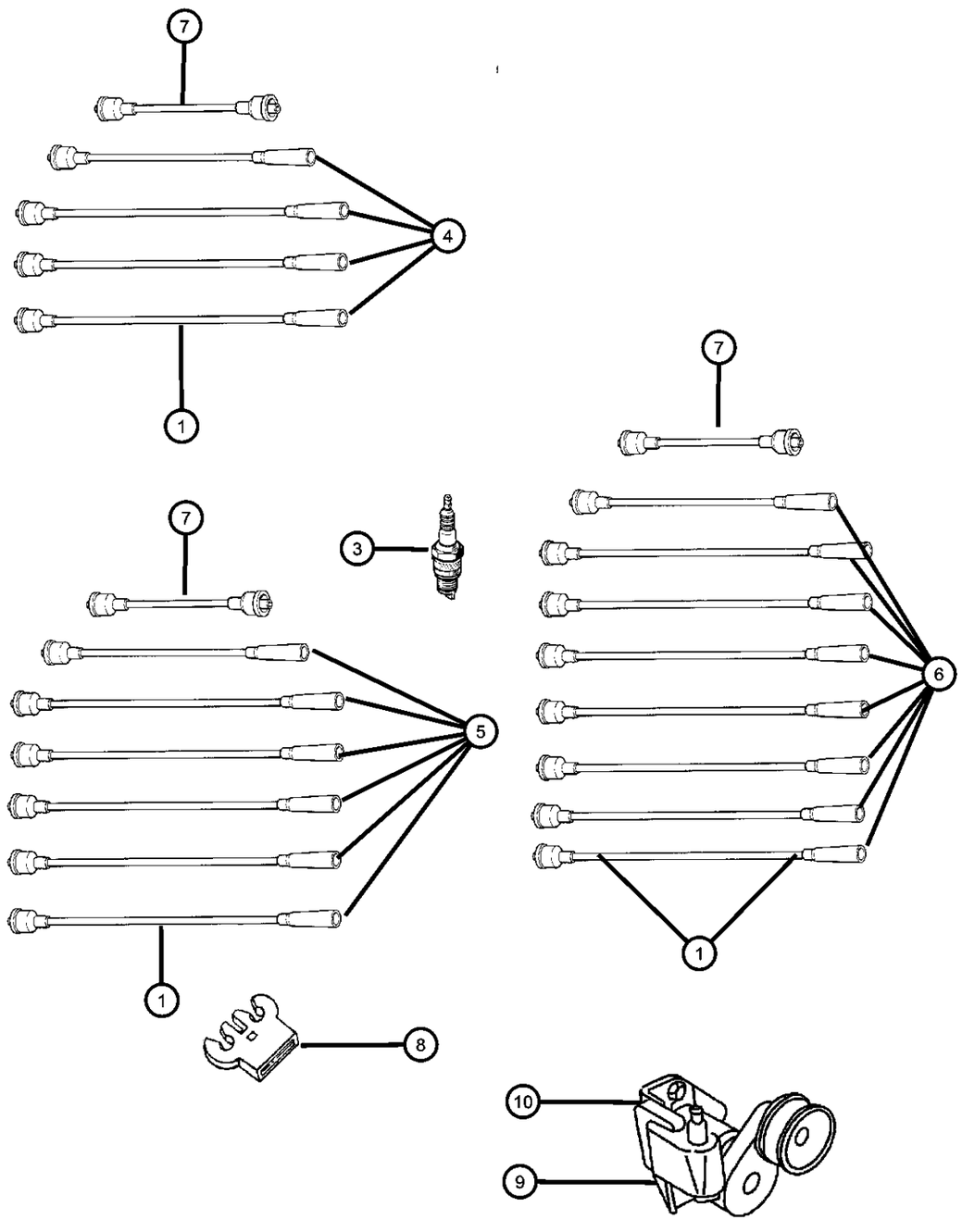

ITEM	PART NUMBER	QTY	LINE	SERIES	BODY	ENGINE	TRANS	TRIM	DESCRIPTION
	56028279AA	1				EM0			[#3]
	56028280AA	2				EM0			[#5,7]
	56028404AA	1				EM0			[#8]
7									CABLE, Ignition Coil
	56028396AA	1				EH0			
	56028398AA	1				EM0			
	56041851AA	1				EP0			
8									SEPERATOR, Ignition Cable
	53006579	1				EP0			
	56027089	1				EH0, EM0			3-Wire
	56028186	1				EH0, EM0			1-Wire
	56041333AA	2				EH0			5-Wire
		4				EM0			5-Wire
9									COIL, Ignition
	56028138AD	8				EV0			
	56028172AB	1				EH0, EM0			
		1				EP0			
10									BRACKET, Ignition Coil
	53008702	1				EP0			
	56026891	1				EH0, EM0			

DAKOTA (AN)

SERIES	LINE	BODY	ENGINE	TRANSMISSION
L = Dakota (All)	1 = Dakota 2WD	61 = Regular Cab (112 WB)	EPE = 2.5L 4 Cylinder	DGK = 4 Speed Automatic 42RE
	5 = Dakota 4WD	31 = Club Cab (131 WB)	EHC = 3.9L 6 Cylinder	DGT = 4 Speed Automatic 46RE
		84 = Quad Cab (131 WB)	EML = 5.0L 8 Cylinder	DDC = 5 Speed HD Manual
			EVA = 4.7L Magnum V8	DDK = 5 Speed HD Manual
			EP0 = All 2.5L	DG4 = Multispeed Automatic 45RFE
			EH0 = All 3.9L	DG0 = All Automatic Transmissions
			EM0 = All 5.9L	DBB = All Manual Transmissions
			EV0 = All 4.7L	

Group - 08A

Instrument Panel and Radios and Consoles

08A-100 Instrument Panel	08A-200 Instrument Panel Cluster	08A-300 Radio, Antenna, and Speakers	08A-400 Consoles
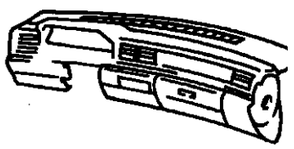	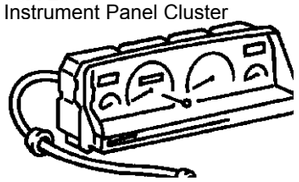	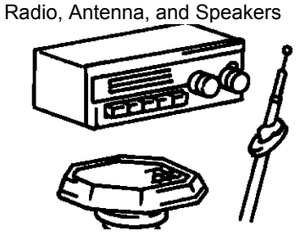	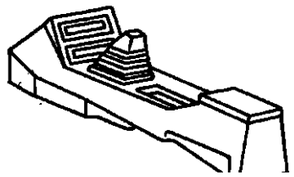

Group - 08A Instrument Panel and Radios and Consoles

Illustration Title — Group-Fig. No.

Instrument Panel
Instrument Panel ..... Fig. 08A - 111

Instrument Panel Cluster
Instrument Cluster ..... Fig. 08A - 211

Radio, Antenna, and Speakers
Radio ..... Fig. 08A - 311
Speakers ..... Fig. 08A - 316
Antenna ..... Fig. 08A - 321

Consoles
Floor Console ..... Fig. 08A - 420
Overhead Console ..... Fig. 08A - 430

Instrument Panel
Figure 08A-111

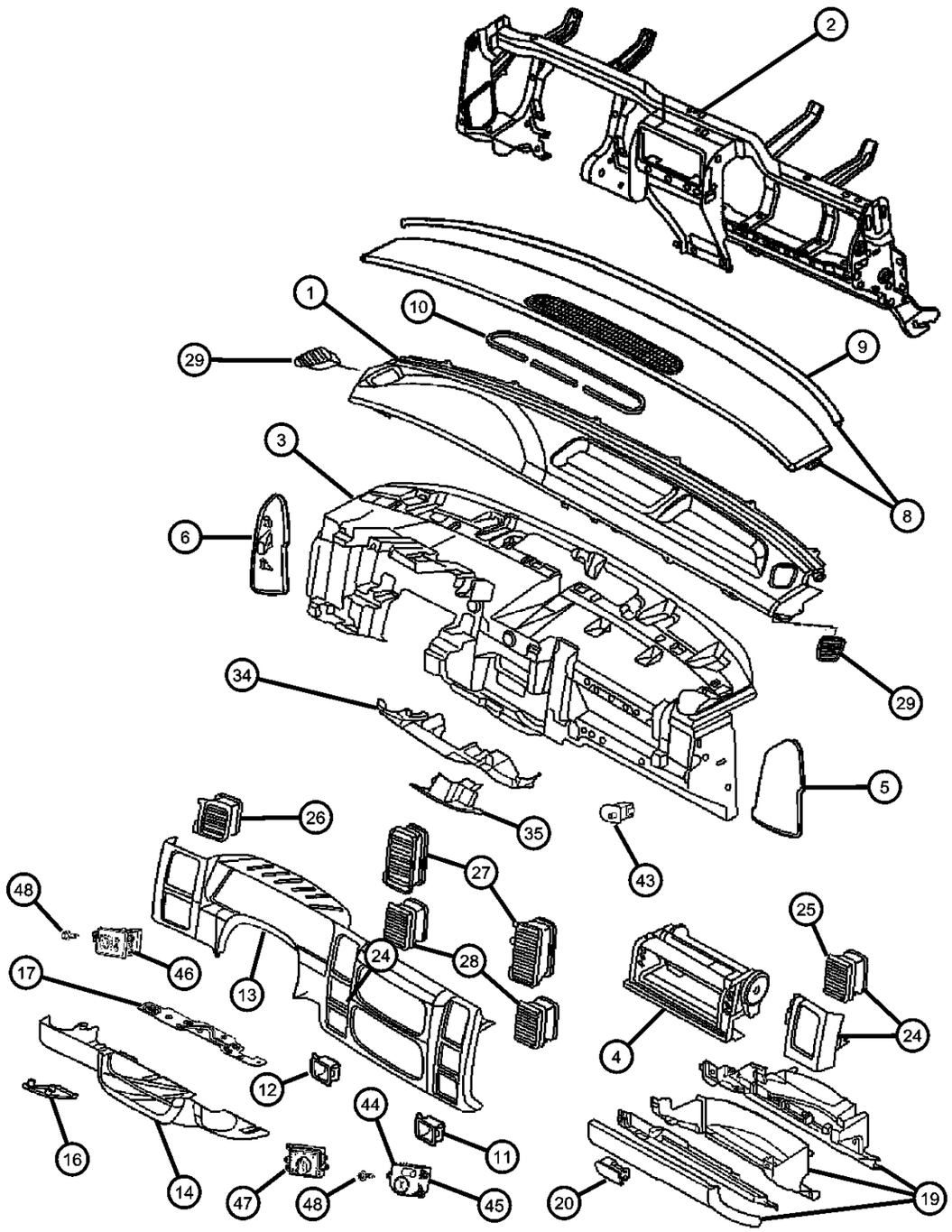

ITEM	PART NUMBER	QTY	LINE	SERIES	BODY	ENGINE	TRANS	TRIM	DESCRIPTION
1									PANEL, Instrument Upper
	5GM70WL8AB	1							[L5]
	5GM70XDVAB	1							[DV]
2	55055936AB	1							REINFORCEMENT, Instrument Panel
3	55055937AD	1							PANEL, Instrument
4									AIR BAG, Passenger
	5GT03WL8AA	1							[L5]
	5GT03XDVAA	1							[DV]
5									END CAP, Instrument Panel
	5GR60WL8AA	1							[L5], Right
	5GR60XD-VAA	1							[DV], Right
6									COVER, Fuse Access
	5GR61WL8AB	1							[L5]
	5GR61XDVAB	1							[DV]
-7	56017713	1							PULLER, Fuse
8									GRILLE, Defroster
	5GR57WL8AB	1							[L5]
	5GR57XDVAB	1							[DV]
9	05019156AA	1							SEAL, Instrument Panel
10	05019156AA	1							SEAL, (NOT SERVICED)
11	5GS40DX9AA	1	1						BIN, Storage, with 4x4 Delete (2WD Vechicle) Black
12	5GS37DX9AA	1			84				BIN, Storage, with Passenger Air Bag Delete (Black)
13	5GM75DX9AA	1							BEZEL, Instrument Cluster, Black (Far Left & Upper Center Left/Right Barrel & Mounting Clips Included)
14									COVER, Steering Column Opening
	5GM83WL8AC	1							[L5]
	5GM83XD-VAC	1							[DV]
-15	J4003672	1							CLIP, Handle to Latch Rod, Steering Column Cover
16									HANDLE, Parking Brake
	0UH10WL8AB	1							[L5]

DAKOTA (AN)

SERIES	LINE	BODY	ENGINE	TRANSMISSION
L = Dakota (All)	1 = Dakota 2WD	61 = Regular Cab (112 WB)	EPE = 2.5L 4 Cylinder	DGK = 4 Speed Automatic 42RE
	5 = Dakota 4WD	31 = Club Cab (131 WB)	EHC = 3.9L 6 Cylinder	DGT = 4 Speed Automatic 46RE
		84 = Quad Cab (131 WB)	EML = 5.0L 8 Cylinder	DDC = 5 Speed HD Manual
			EVA = 4.7L Magnum V8	DDK = 5 Speed HD Manual
			EP0 = All 2.5L	DG4 = Multispeed Automatic 45RFE
			EH0 = All 3.9L	DG0 = All Automatic Transmissions
			EM0 = All 5.9L	DBB = All Manual Transmissions
			EV0 = All 4.7L	

Instrument Panel
Figure 08A-111

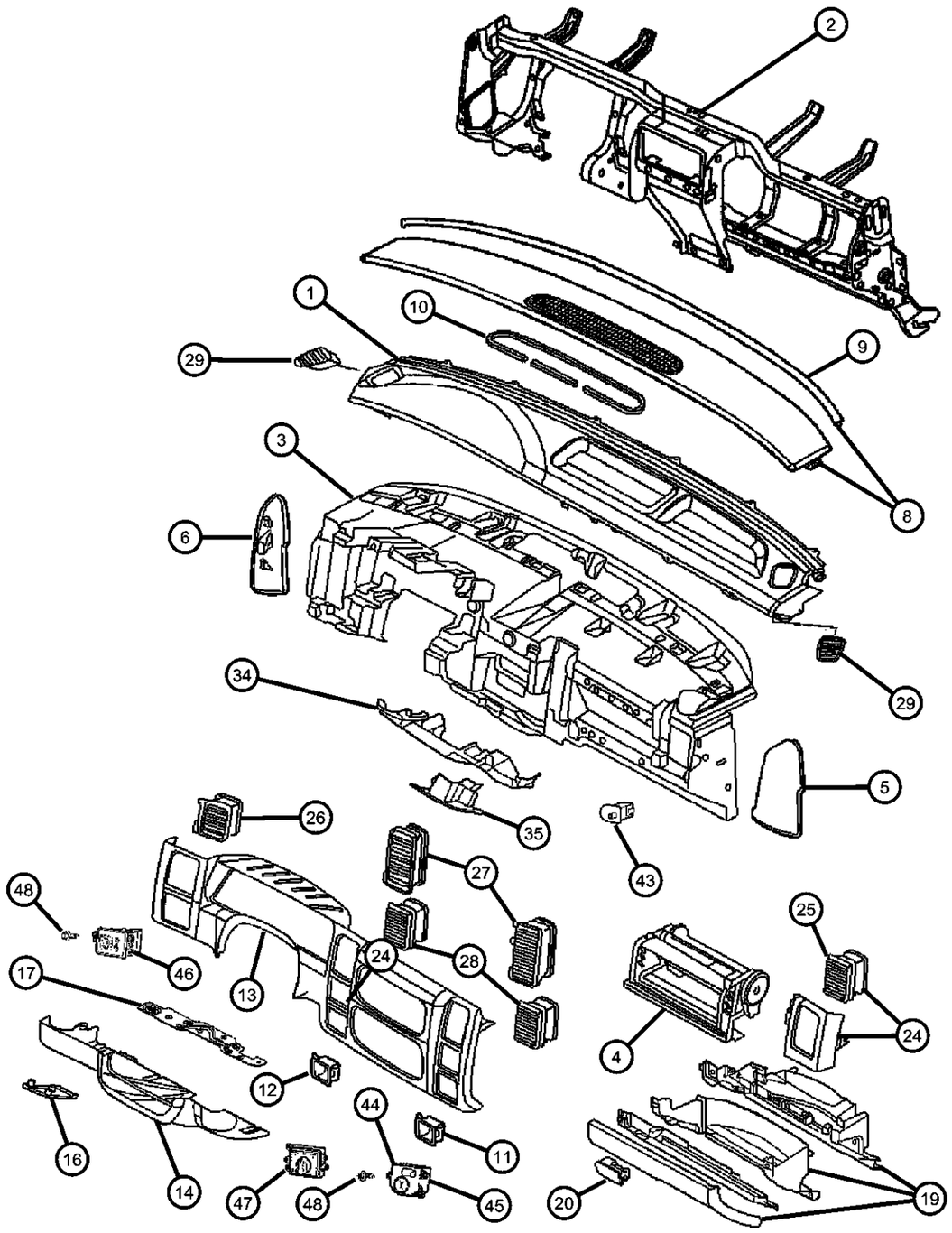

ITEM	PART NUMBER	QTY	LINE	SERIES	BODY	ENGINE	TRANS	TRIM	DESCRIPTION
	0UH10XDVAB	1							[DV]
17	55056129AB	1							BRACKET, Hood Lock
-18	55055480	2							BUMPER, Parking Brake Lever, Steering Column Cover
19									GLOVE BOX, Instrument Panel
	5GM731L8AA	1							[L5]
	5GM731DVAD	1							[DV]
20									LATCH, Glovebox Door
	0UJ461DVAA	1							[DV]
	0UJ461L8AA	1							[L5]
-21									BUMPER, Glove Box Door
	04524343	2							
	05019386AA	2							Glove box stop
-22	04685164	1							COVER, Glove Box Lamp Hole
-23	05019390AA	1							STRIKER, Glove Box Door Latch
24									OUTLET, Air
	0UJ471DVAA	1							[DV]
	0UJ471L8AA	1							[L5]
25	0UJ19DX9AA	1							BARREL, Air Outlet
26	0UJ19DX9AA	1							BARREL, Air Outlet
27	0UJ20DX9AA	1							BARREL, Air Outlet
28	0UJ21DX9AA	1							BARREL, Air Outlet
29									GRILLE, Demister
	0UJ491DVAA	1							[DV], Left
	0UJ491L8AA	1							[L5], Left
	0UJ501DVAA	1							[DV], Right
	0UJ501L8AA	1							[L5], Right
-30	04793554	1							POWER OUTLET, Cigar Lighter
-31									PLUG, 12 V-Outlet
	0HX32WL8AB	1							[L5]
	0HX32XDVAB	1							[DV]
-32	04685591	1							CAP, Cigar Lighter
-33	06504067	10							CLIP, Hood

DAKOTA (AN)

SERIES	LINE	BODY	ENGINE	TRANSMISSION
L = Dakota (All)	1 = Dakota 2WD	61 = Regular Cab (112 WB)	EPE = 2.5L 4 Cylinder	DGK = 4 Speed Automatic 42RE
	5 = Dakota 4WD	31 = Club Cab (131 WB)	EHC = 3.9L 6 Cylinder	DGT = 4 Speed Automatic 46RE
		84 = Quad Cab (131 WB)	EML = 5.0L 8 Cylinder	DDC = 5 Speed HD Manual
			EVA = 4.7L Magnum V8	DDK = 5 Speed HD Manual
			EP0 = All 2.5L	DG4 = Multispeed Automatic 45RFE
			EH0 = All 3.9L	DG0 = All Automatic Transmissions
			EM0 = All 5.9L	DBB = All Manual Transmissions
			EV0 = All 4.7L	

Instrument Panel
Figure 08A-111

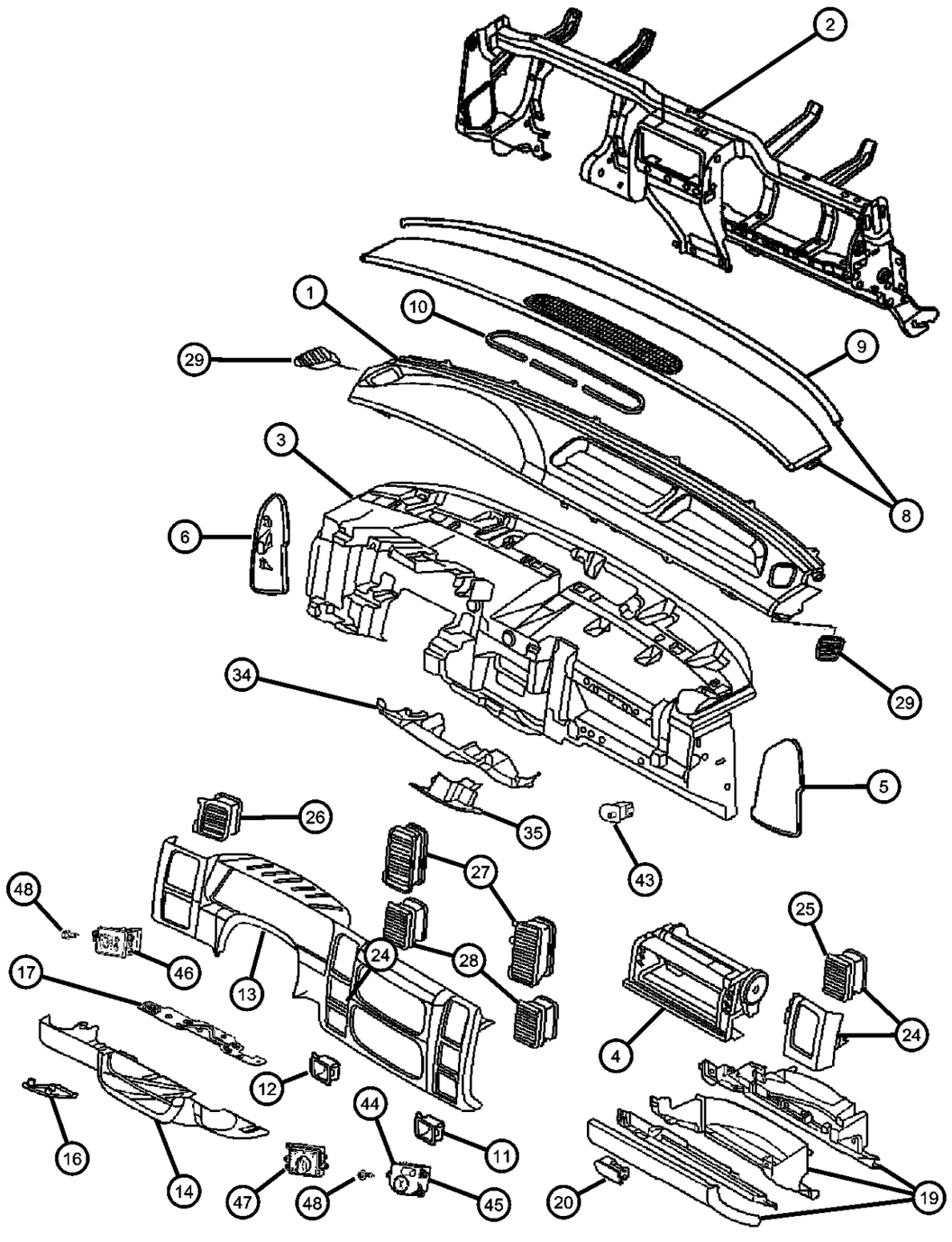

ITEM	PART NUMBER	QTY	LINE	SERIES	BODY	ENGINE	TRANS	TRIM	DESCRIPTION
34									BEZEL, Instrument Panel, Lower
	5JC40WL8AA	1							[L5]
	5JC40XDVAA	1							[DV]
35									SMOKERS KIT, Ash Receiver With Lighter
	82207126	1							Manual Transmission
	82207485	1							Automatic Transmission
-36	05019394AA	1							RECEPTACLE, Ash Receiver
-37	05019395AA	1							PIN, Pivot
-38	04685590	1							BASE, Cigar Lighter
-39	04793554AB	1							POWER OUTLET, Cigar Lighter
-40	04685592	1							LAMP, Cigar Lighter
-41	04685370	1							KNOB AND ELEMENT, Cigar Lighter
-42									LABEL, Air Bag Warning
	04595748AA	1							Glovebox
	04595749AA	1							Airbag Warning, French & English (Glovebox) Canada
	04787437AA	2			84				Airbag Warning, French & English (Sun Visor) Canada
	55350848AA	2			31, 61				Airbag Warning, French & English (Sun Visor) Canada
43	04565022	1							SWITCH AND LAMP, Glove Box
44									BEZEL, Airbag Disable
	56045539AA	1			31, 61				
	56045565AA	1			31, 61				Canada (French)
45	56045496AA	1			31, 61				SWITCH, Passenger Airbag Disarm
46									SWITCH, Headlamp
	56045531AE	1							Without Foglamps and without Cargo Lamp
	56045532AE	1							Without Foglamps and with Cargo lamp
	56045533AE	1							Up to 10/17/01, With Foglamps and with Cargo lamp
	56045533AF	1							10/17/01 & After, With Foglamps and with Cargo lamp
47									SWITCH, Transfer Case Mode

DAKOTA (AN)

SERIES	LINE	BODY	ENGINE	TRANSMISSION
L = Dakota (All)	1 = Dakota 2WD	61 = Regular Cab (112 WB)	EPE = 2.5L 4 Cylinder	DGK = 4 Speed Automatic 42RE
	5 = Dakota 4WD	31 = Club Cab (131 WB)	EHC = 3.9L 6 Cylinder	DGT = 4 Speed Automatic 46RE
		84 = Quad Cab (131 WB)	EML = 5.0L 8 Cylinder	DDC = 5 Speed HD Manual
			EVA = 4.7L Magnum V8	DDK = 5 Speed HD Manual
			EP0 = All 2.5L	DG4 = Multispeed Automatic 45RFE
			EH0 = All 3.9L	DG0 = All Automatic Transmissions
			EM0 = All 5.9L	DBB = All Manual Transmissions
			EV0 = All 4.7L	

Instrument Panel
Figure 08A-111

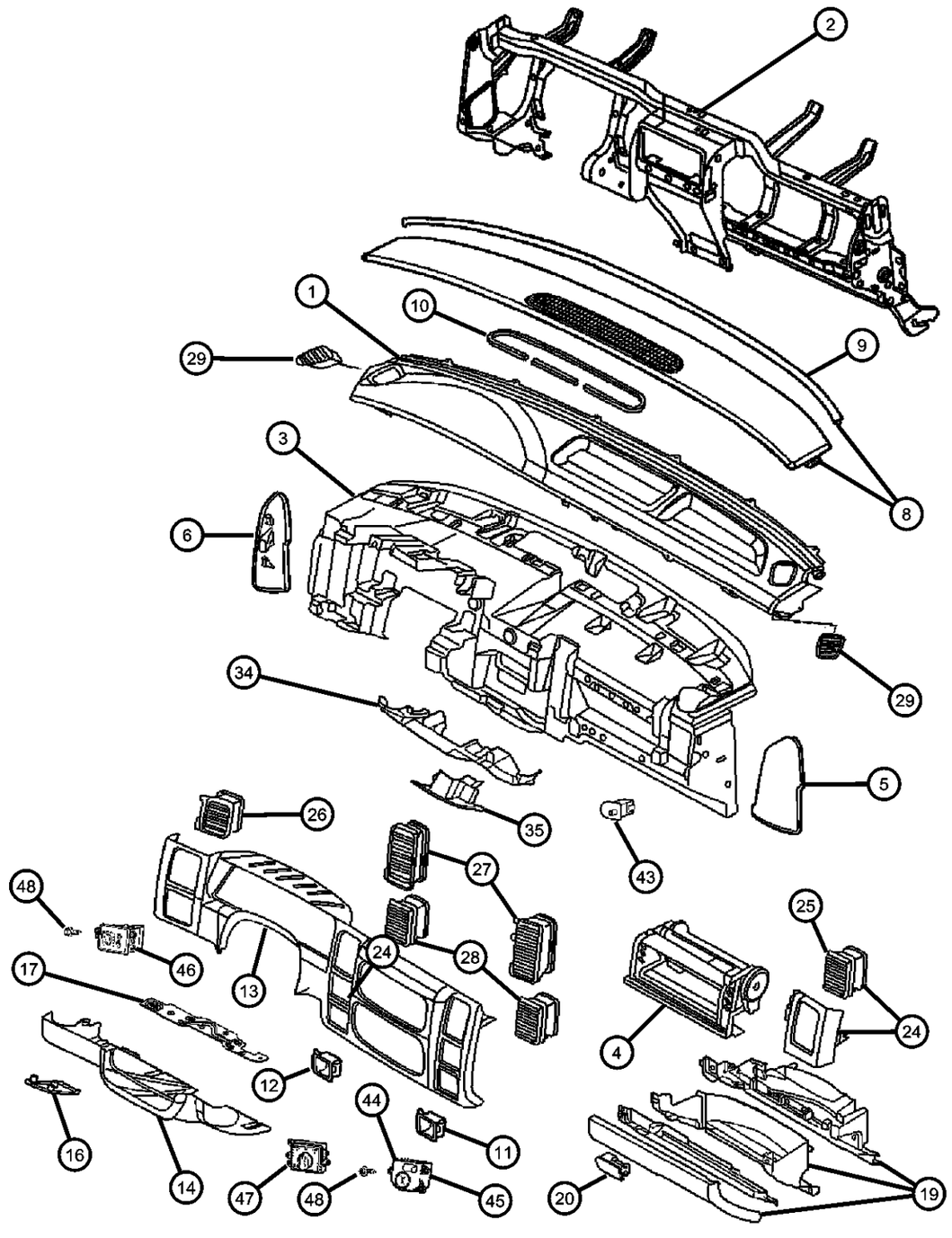

ITEM	PART NUMBER	QTY	LINE	SERIES	BODY	ENGINE	TRANS	TRIM	DESCRIPTION
	56045484AC	1	5						Shift on the fly (part time) DHT
	56045485AC	1	5						Shift on the fly full time) DHV
48	56045485AC	1							SCREW, (NOT SERVICED),

DAKOTA (AN)

SERIES	LINE	BODY	ENGINE	TRANSMISSION
L = Dakota (All)	1 = Dakota 2WD	61 = Regular Cab (112 WB)	EPE = 2.5L 4 Cylinder	DGK = 4 Speed Automatic 42RE
	5 = Dakota 4WD	31 = Club Cab (131 WB)	EHC = 3.9L 6 Cylinder	DGT = 4 Speed Automatic 46RE
		84 = Quad Cab (131 WB)	EML = 5.0L 8 Cylinder	DDC = 5 Speed HD Manual
			EVA = 4.7L Magnum V8	DDK = 5 Speed HD Manual
			EP0 = All 2.5L	DG4 = Multispeed Automatic 45RFE
			EH0 = All 3.9L	DG0 = All Automatic Transmissions
			EM0 = All 5.9L	DBB = All Manual Transmissions
			EV0 = All 4.7L	

AR = use ase required - = Non illustrrated part

Instrument Cluster
Figure 08A-211

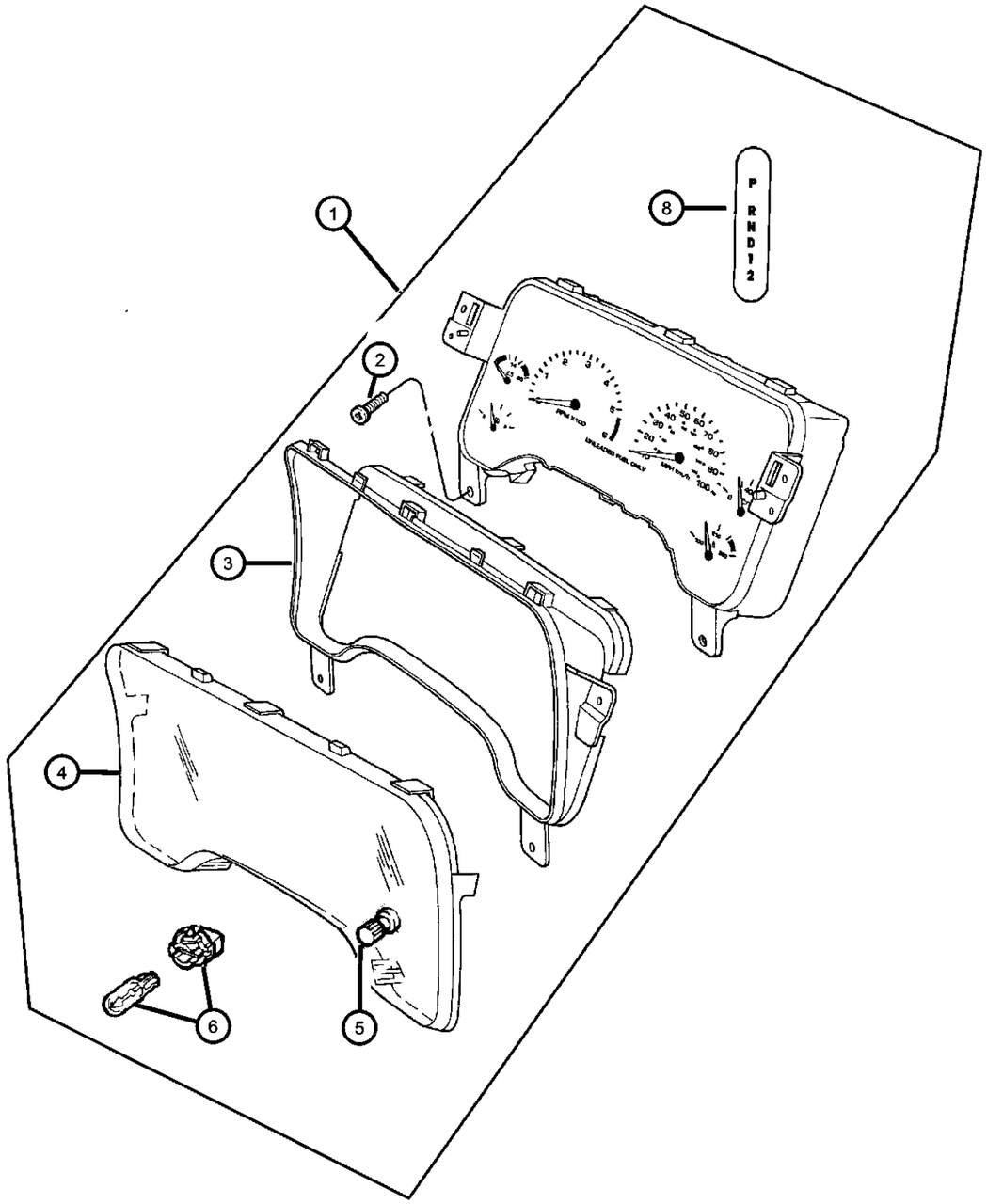

ITEM	PART NUMBER	QTY	LINE	SERIES	BODY	ENGINE	TRANS	TRIM	DESCRIPTION
1									CLUSTER
	56045548AB	1							Manual Transmission with/200 KPH and with Tachometer
	56045549AB	1							Manual Transmission with/120 MPH and with Tachometer
	56045646AB	1							Automatic Transmission with/120 MPH and with Tachometer
	56045647AB	1							Automatic Transmission with/200 KPH and with Tachometer
2	06032723	2							SCREW, Self Tapping, M4.2x1.69x19.05
3	05018759AA	1							MASK, Instrument Cluster
4	05018760AA	1							LENS, Cluster
5	05018760AA	1							KNOB, Odometer Reset, Serviced with Cluster Assembly, (NOT SERVICED)
6	05018761AA	7							LAMP, Bulb And Socket
-7	04723769	1							SOCKET, Warning Lamp
8	04723769	1							INDICATOR, PRNDL, Electronic PRNDL, (NOT REQUIRED)
-9									PLUG
	52118746	1	1						
		1	5						

DAKOTA (AN)

SERIES	LINE	BODY	ENGINE	TRANSMISSION
L = Dakota (All)	1 = Dakota 2WD	61 = Regular Cab (112 WB)	EPE = 2.5L 4 Cylinder	DGK = 4 Speed Automatic 42RE
	5 = Dakota 4WD	31 = Club Cab (131 WB)	EHC = 3.9L 6 Cylinder	DGT = 4 Speed Automatic 46RE
		84 = Quad Cab (131 WB)	EML = 5.0L 8 Cylinder	DDC = 5 Speed HD Manual
			EVA = 4.7L Magnum V8	DDK = 5 Speed HD Manual
			EP0 = All 2.5L	DG4 = Multispeed Automatic 45RFE
			EH0 = All 3.9L	DG0 = All Automatic Transmissions
			EM0 = All 5.9L	DBB = All Manual Transmissions
			EV0 = All 4.7L	

Radio
Figure 08A-311

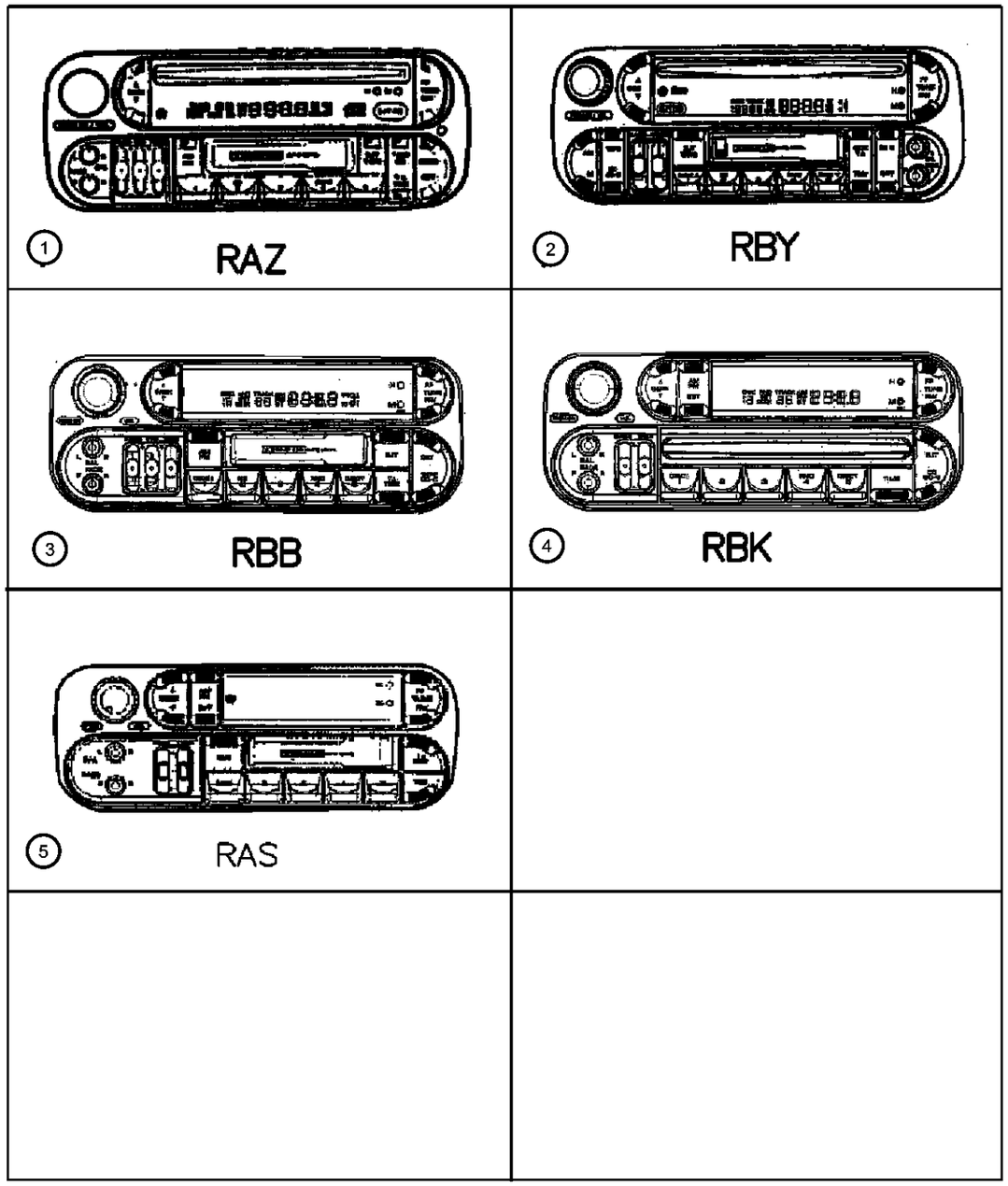

ITEM	PART NUMBER	QTY	LINE	SERIES	BODY	ENGINE	TRANS	TRIM	DESCRIPTION
[RAS]= AM/FM Cassette Soft Touch [RAZ]= AM/FM Cassette/CD/CD Changer RBDS [RBB]=AM/FM Cassette/CD/CD Changer [RBK]=AM/FM Cassette/CD/CD Changer [RBY]=AM/FM Cassette/CD/CD Changer									
1	56038555AH	1							RADIO, AM/FM with CD and Cassette, [RAZ]
2	56038583AH	1							RADIO, AM/FM/Cassette With CD, [RBY]
3	56038588AL	1							RADIO, AM/FM/Cassette With CD Control, [RBB]
4	56038589AM	1							RADIO, AM/FM with CD and Equalizer, [RBK]
5	56038931AB	1							RADIO, AM/FM Cassette, [RAS]
-6	56038622AC	1							RADIO, AM/FM with CD and Equalizer, [RBQ]
-7									WIRING KIT, Audio System Adapter
	82207523	1							Used when installing 7 way connector radios to vehicles that have 22 way radio connector
	82207541	1							Used when installing radios with 22 way connectors to vehicles that have a 7 way radio connector
-8									STRAP, Ground
	56043134AC	1			84				Exhaust to the body
	56043134AD	1			31, 61				Exhaust to the body

DAKOTA (AN)

SERIES	LINE	BODY	ENGINE	TRANSMISSION
L = Dakota (All)	1 = Dakota 2WD 5 = Dakota 4WD	61 = Regular Cab (112 WB) 31 = Club Cab (131 WB) 84 = Quad Cab (131 WB)	EPE = 2.5L 4 Cylinder EHC = 3.9L 6 Cylinder EML = 5.0L 8 Cylinder EVA = 4.7L Magnum V8 EP0 = All 2.5L EH0 = All 3.9L EM0 = All 5.9L EV0 = All 4.7L	DGK = 4 Speed Automatic 42RE DGT = 4 Speed Automatic 46RE DDC = 5 Speed HD Manual DDK = 5 Speed HD Manual DG4 = Multispeed Automatic 45RFE DG0 = All Automatic Transmissions DBB = All Manual Transmissions

Speakers
Figure 08A-316

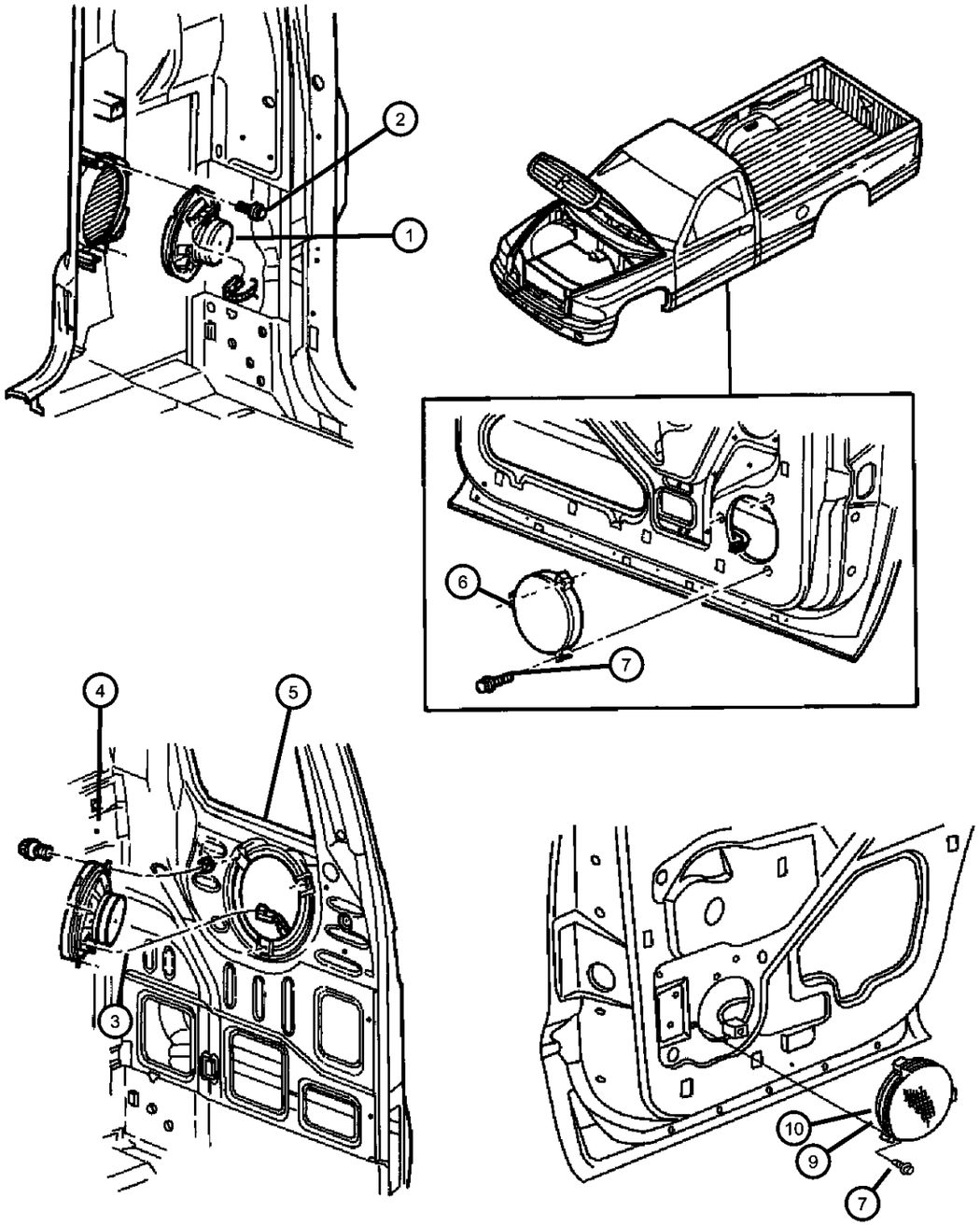

ITEM	PART NUMBER	QTY	LINE	SERIES	BODY	ENGINE	TRANS	TRIM	DESCRIPTION
[RCD] = Standard Stereo System [RCE] = Infinity Stereo System									
1									SPEAKER, 5.25"
	56043115AD	2			61				[RCK] Rear
	56043142AA	2			61				[RCD] Rear
2	56043142AA	2							SCREW, Tapping Pan Head (.164-18x.500), (NOT SERVICED),
3									SPEAKER, Rear, 6.5
	56043111AA	2			31				[RCK] Rear
	56043139AB	2			31, 61				[RCD] Rear
4	56043139AB	2							SCREW, Tapping, Hex Flange Head (M4.8x1.59x20.00), (NOT SERVICED),
5	06034715	6			31, 84				CLIP, Speaker
6									SPEAKER, 6.5"
	56043094AB	2			84				[RCD], Front Door
	56043108AA	2			31, 61				[RCK], Front Door
	56043109AA	2			84				[RCK], Front Door
	56043140AB	2			31, 61				[RCD] (Speaker comes with Spacer), Front Door
7	56043140AB	2							SCREW, Tapping, Large Round Washer Head (.190-16x1.500), (NOT SERVICED),
-8									SPEAKER, Front Tweeter
	56043146AA	1			31, 61				[RCK], Right
		1			84				[RCK], Right
	56043147AA	1			31, 61				[RCK], Left
		1			84				[RCK], Left
9	56043140AB	2			84				SPEAKER, 6.5", [RCD] (Speaker comes with Spacer), Rear, Door
10	56043066AB	2			84				SPEAKER, Rear, 6.5, [RCK], Rear, Door

DAKOTA (AN)

SERIES	LINE	BODY	ENGINE	TRANSMISSION
L = Dakota (All)	1 = Dakota 2WD 5 = Dakota 4WD	61 = Regular Cab (112 WB) 31 = Club Cab (131 WB) 84 = Quad Cab (131 WB)	EPE = 2.5L 4 Cylinder EHC = 3.9L 6 Cylinder EML = 5.0L 8 Cylinder EVA = 4.7L Magnum V8 EP0 = All 2.5L EH0 = All 3.9L EM0 = All 5.9L EV0 = All 4.7L	DGK = 4 Speed Automatic 42RE DGT = 4 Speed Automatic 46RE DDC = 5 Speed HD Manual DDK = 5 Speed HD Manual DG4 = Multispeed Automatic 45RFE DG0 = All Automatic Transmissions DBB = All Manual Transmissions

Antenna
Figure 08A-321

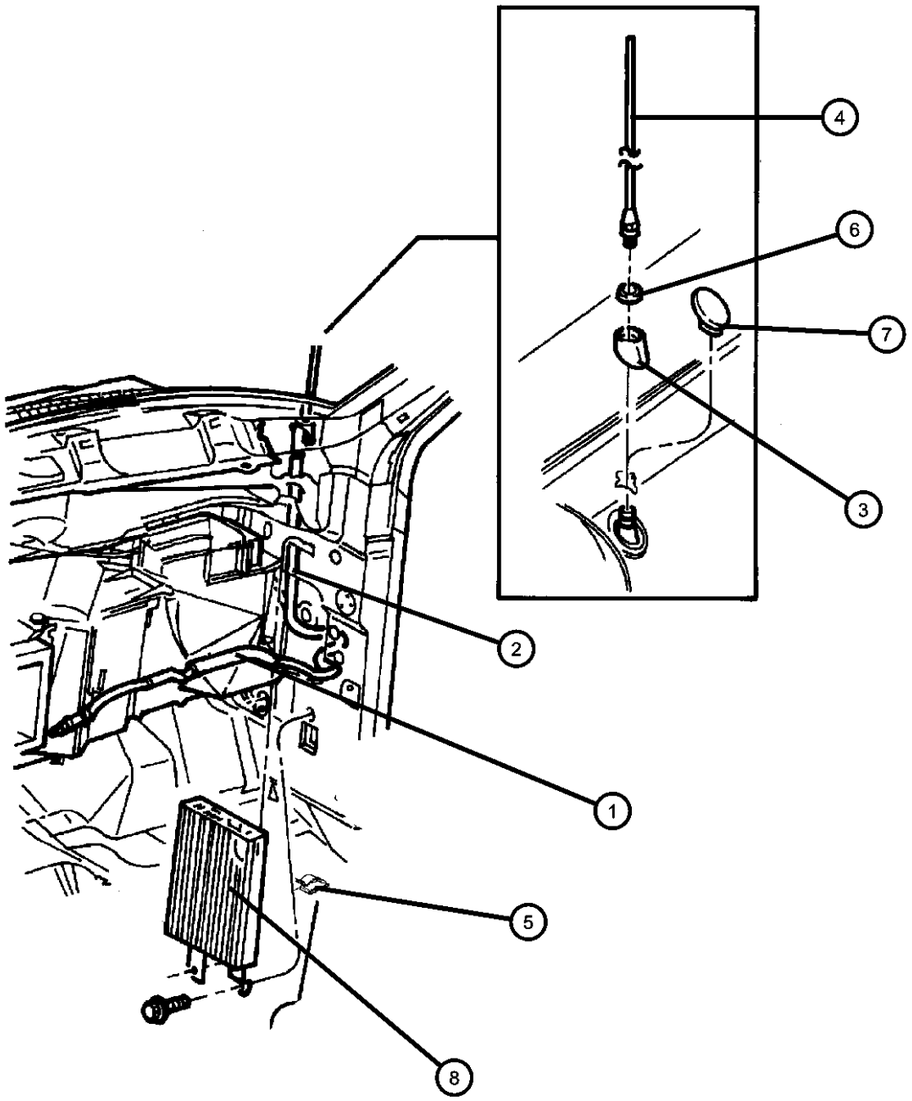

ITEM	PART NUMBER	QTY	LINE	SERIES	BODY	ENGINE	TRANS	TRIM	DESCRIPTION

Notes:
[RAS]=AM/FM Cassette
[RCK]=Infinity with 8 Speaker System
[[RDD]=Fixed Antenna

1	56043118AD	1	ANTENNA, Base Cable And Bracket, [RDD]
2			CABLE, Antenna
	56043244AA	1	[RDD] + [RAS] Base Radio
	56043245AA	1	[RDD] - [RAS]Premium Radio
3	56007461	1	ADAPTER, Antenna, [RDD]
4	04685574AE	1	MAST, Antenna, [RDD]
5	04294036	1	CLIP
6	56007570	1	NUT, M6x1, [RDD]
7	56007462	1	PLUG, Antenna Hole
8	56043072AF	1	AMPLIFIER, Radio, [RCK]
-9	05269593	1	CAP, Antenna Body, [RDD]

DAKOTA (AN)

SERIES	LINE	BODY	ENGINE	TRANSMISSION
L = Dakota (All)	1 = Dakota 2WD	61 = Regular Cab (112 WB)	EPE = 2.5L 4 Cylinder	DGK = 4 Speed Automatic 42RE
	5 = Dakota 4WD	31 = Club Cab (131 WB)	EHC = 3.9L 6 Cylinder	DGT = 4 Speed Automatic 46RE
		84 = Quad Cab (131 WB)	EML = 5.0L 8 Cylinder	DDC = 5 Speed HD Manual
			EVA = 4.7L Magnum V8	DDK = 5 Speed HD Manual
			EP0 = All 2.5L	DG4 = Multispeed Automatic 45RFE
			EH0 = All 3.9L	DG0 = All Automatic Transmissions
			EM0 = All 5.9L	DBB = All Manual Transmissions
			EV0 = All 4.7L	

Floor Console
Figure 08A-420

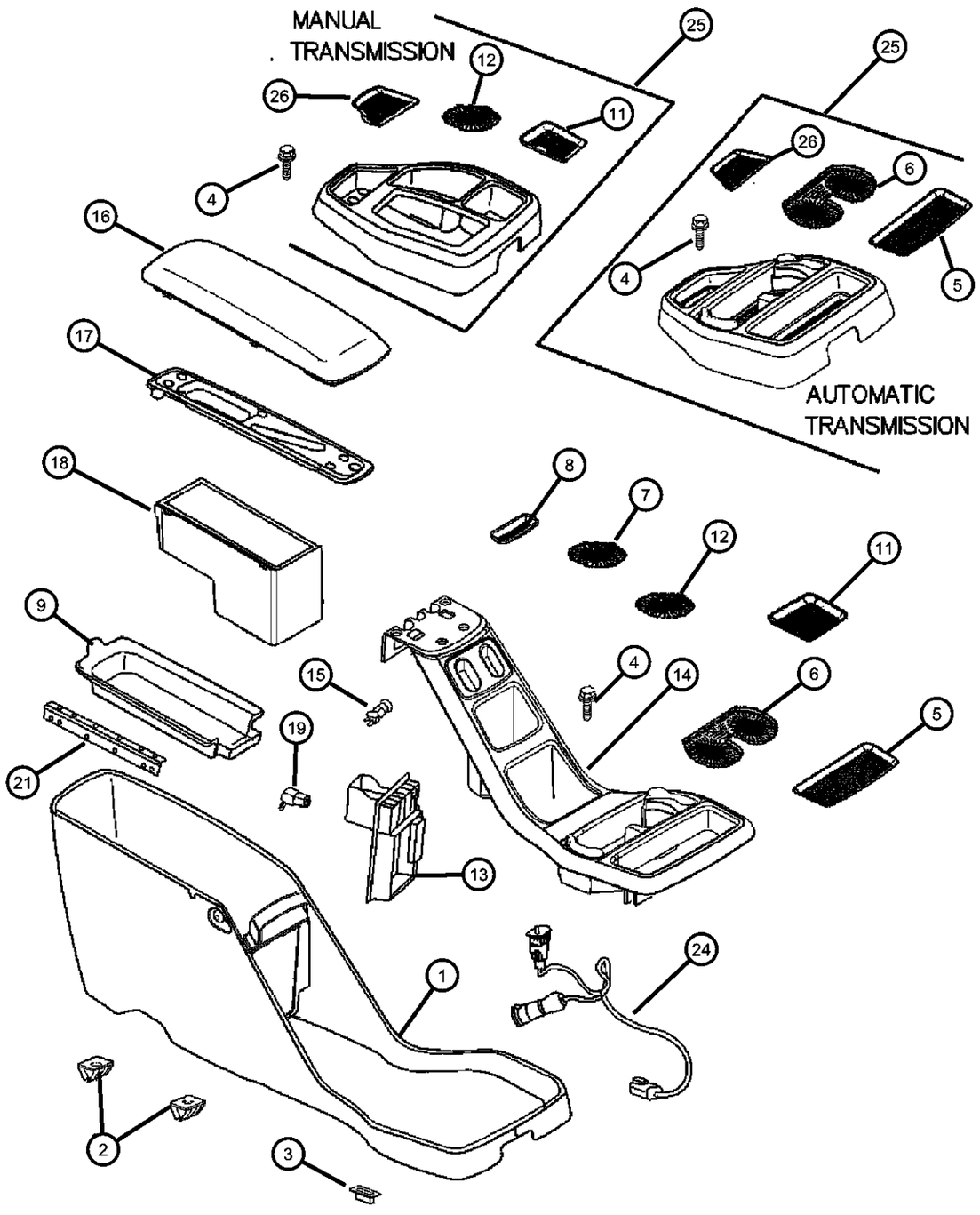

ITEM	PART NUMBER	QTY	LINE	SERIES	BODY	ENGINE	TRANS	TRIM	DESCRIPTION
NOTE:									
Sales Codes:									
[DBB]=All Manual Transmissions									
[DG0]=All Automatic Transmissions									
1									CONSOLE, Base, Full
	0UE391DVAB	1							[DV] Up to 01/14/02
	0UE391L5AB	1							[L5] Up to 01/14/02
	0UE391DVAC	1							[DV] 01/14/02 & After
	0UE391L5AC	1							[L5] 01/14/02 & After
2	0UE391L5AC	1							NUT/SPRING, Push In, For M6 Stud, M6.3x1.81, (NOT SERVICED),
3	06506721AA	1							NUT, Plastic Snap-in
4	06506721AA	1							SCREW, Screw Tapping/Hex./Flg.HD Type B. THD. Pilot. PT. Special (M6.3x1.81x25.00), (NOT SERVICED)
5	05018897AA	1							MAT, Floor Console, Front Mat With [DG0]
6	05018898AA	1							MAT, Floor Console, Double Cup Mat With [DG0]
7									MAT, Floor Console
	05018899AA	1							Up to 9/17/01, Big Gulp Mat
	05018899AB	1							9/17/01 & After, Big Gulp Mat
8	05018900AB	1							MAT, Floor Console, Cellular Phone Mat
9	05018901AA	1							MAT, Floor Console, Base Mat
-10	05018902AA	1							MAT, Floor Console, Upper Gum Mat
11	05018937AA	1							MAT, Floor Console, Front Left Mat With [DBB]
12									MAT, Single Cup
	05018938AA	1							Up to 9/17/01, With [DBB]
	05018938AB	1							9/17/01 & After, With [DBB]
13	05018903AA	1							DOOR, Front Console
14									PLATE, Floor Console
	0UE151DVAA	1							With [DV] Color Code & [DG0] Transmission
	0UE151L5AA	1							With [L5] Color Code & [DG0] Transmision

DAKOTA (AN)

SERIES	LINE	BODY	ENGINE	TRANSMISSION
L = Dakota (All)	1 = Dakota 2WD	61 = Regular Cab (112 WB)	EPE = 2.5L 4 Cylinder	DGK = 4 Speed Automatic 42RE
	5 = Dakota 4WD	31 = Club Cab (131 WB)	EHC = 3.9L 6 Cylinder	DGT = 4 Speed Automatic 46RE
		84 = Quad Cab (131 WB)	EML = 5.0L 8 Cylinder	DDC = 5 Speed HD Manual
			EVA = 4.7L Magnum V8	DDK = 5 Speed HD Manual
			EP0 = All 2.5L	DG4 = Multispeed Automatic 45RFE
			EH0 = All 3.9L	DG0 = All Automatic Transmissions
			EM0 = All 5.9L	DBB = All Manual Transmissions
			EV0 = All 4.7L	

Floor Console
Figure 08A-420

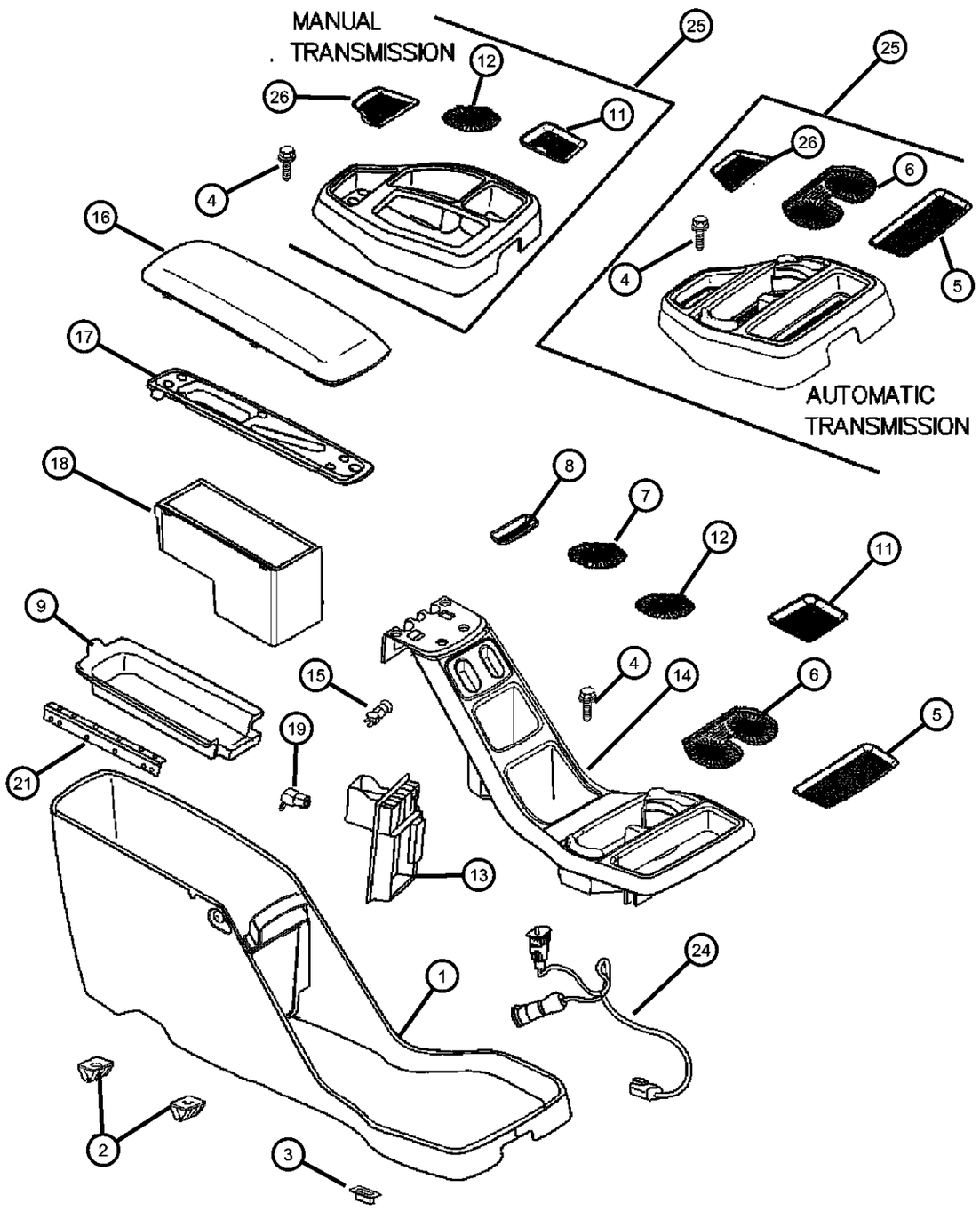

ITEM	PART NUMBER	QTY	LINE	SERIES	BODY	ENGINE	TRANS	TRIM	DESCRIPTION
	0UE401DVAB	1							With [DV] Color Code & [DBB] Transmission
	0UE401L5AB	1							With [L5] Color Code & [DBB] Transmission
15									BUTTON, Armrest Latch
	05018907AA	1							Up to 01/14/02
	05018907AB	1							01/14/02 & After
16									PAD, Armrest
	0UE171DVAA	1							With [DV] Color Code
	0UE171L5AA	1							With [L5] Color Code
17	05018906AA	1							BASE, Armrest
18	05018904AA	1							BIN, Floor Console
19	04793554AB	1							POWER OUTLET, Cigar Lighter
-20	56049386AA	1							CAP, Power Outlet
21	05018905AA	1							HINGE, Armrest Pad
-22	04565022	1							SWITCH AND LAMP, Glove Box
-23	L0000194	1							BULB, 194
24	56045561AB	1							WIRING, Console
25									CONSOLE, Floor, Mini
	5GS001DVAE	1							With [DV] Color Code & [DG0] Transmission
	5GS001L5AE	1							With [L5] Color Code & [DG0] Transmission
	5GS011L5AC	1							With [L5] Color Code & [DBB] Transmission
	5GS011DVAD	1							With [DV] Color Code & [DBB] Transmission
26	05018969AA	1							MAT, Floor Console, Rear Cover Plate Mat
-27									SMOKERS KIT, Ash Receiver With Lighter
	82207126	1							With cup holder, Manual Transmission
	82207485	1							With cup holder, Automatic Transmission

DAKOTA (AN)

SERIES	LINE	BODY	ENGINE	TRANSMISSION
L = Dakota (All)	1 = Dakota 2WD 5 = Dakota 4WD	61 = Regular Cab (112 WB) 31 = Club Cab (131 WB) 84 = Quad Cab (131 WB)	EPE = 2.5L 4 Cylinder EHC = 3.9L 6 Cylinder EML = 5.0L 8 Cylinder EVA = 4.7L Magnum V8 EP0 = All 2.5L EH0 = All 3.9L EM0 = All 5.9L EV0 = All 4.7L	DGK = 4 Speed Automatic 42RE DGT = 4 Speed Automatic 46RE DDC = 5 Speed HD Manual DDK = 5 Speed HD Manual DG4 = Multispeed Automatic 45RFE DG0 = All Automatic Transmissions DBB = All Manual Transmissions

Overhead Console
Figure 08A-430

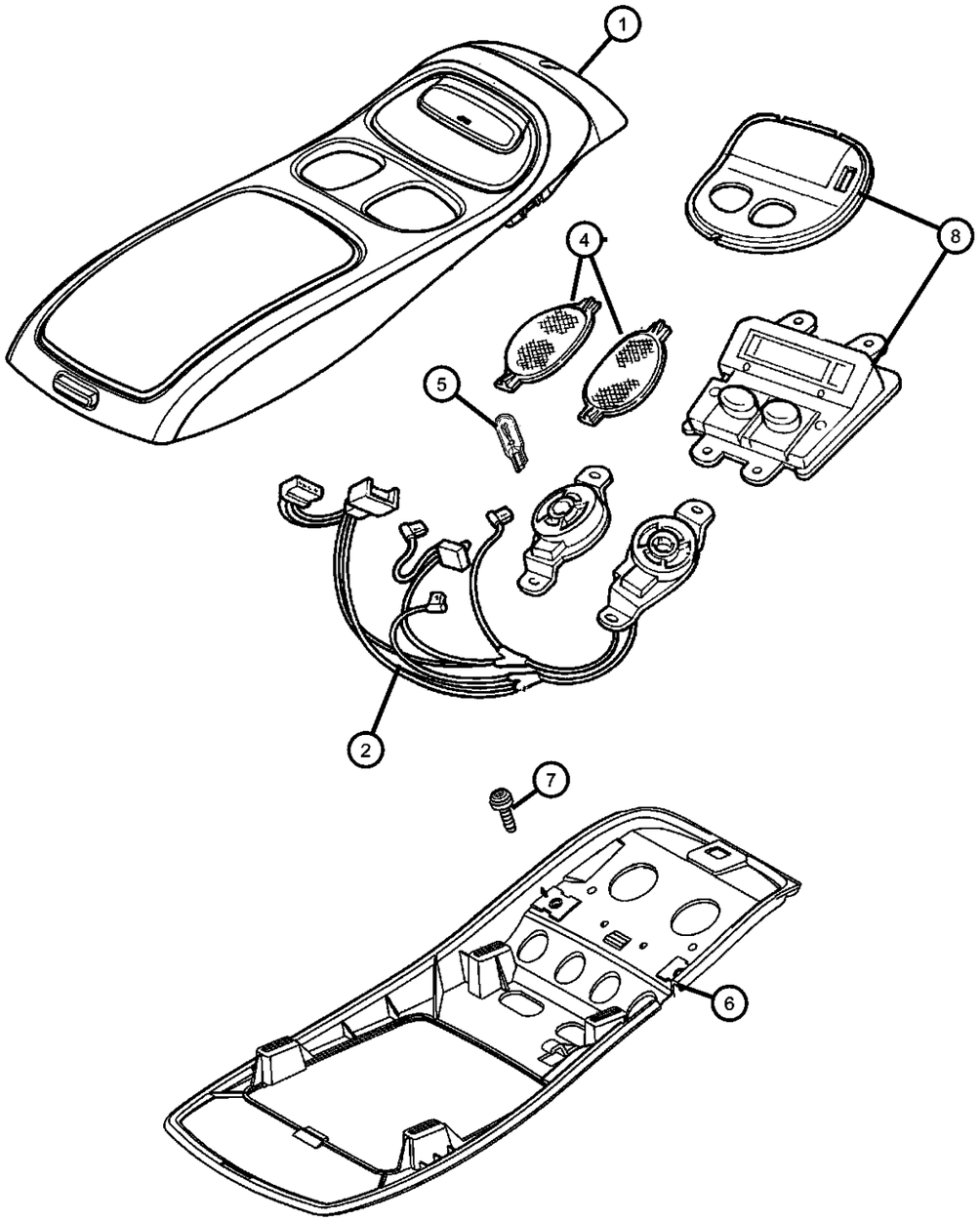

ITEM	PART NUMBER	QTY	LINE	SERIES	BODY	ENGINE	TRANS	TRIM	DESCRIPTION
1	0WE89TL2AA	1							CONSOLE, Overhead Mini, Less Electronics
2	05073057AA	1							WIRING, Overhead Console, Full Console (Bulbs Included)
-3	05073052AA	1							WIRING, Overhead Lighting, Mini Console (Bulbs Included)
4	05012882AA	1							LENS, Message Center
5	L0000192	2							BULB, 192
6	55361206AA	1							BRACKET, Overhead Console
7	05073053AA	4							SCREW
8	56049050AE	1							MODULE, Compass Temperature
-9	0WE91TL2AA	1							PLUG, Console, Plastic, Paper Clip (Use with Low Line Console)
-10	05069186AA	2							CLIP, Console, Console Mounting
-11	04746232	1							CLIP, Z-Axis, Console Mounting

DAKOTA (AN)

SERIES	LINE	BODY	ENGINE	TRANSMISSION
L = Dakota (All)	1 = Dakota 2WD	61 = Regular Cab (112 WB)	EPE = 2.5L 4 Cylinder	DGK = 4 Speed Automatic 42RE
	5 = Dakota 4WD	31 = Club Cab (131 WB)	EHC = 3.9L 6 Cylinder	DGT = 4 Speed Automatic 46RE
		84 = Quad Cab (131 WB)	EML = 5.0L 8 Cylinder	DDC = 5 Speed HD Manual
			EVA = 4.7L Magnum V8	DDK = 5 Speed HD Manual
			EP0 = All 2.5L	DG4 = Multispeed Automatic 45RFE
			EH0 = All 3.9L	DG0 = All Automatic Transmissions
			EM0 = All 5.9L	DBB = All Manual Transmissions
			EV0 = All 4.7L	

Group - 9

Engine Mounting

009-100 Engine Mounting 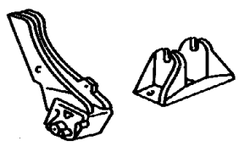			

Group - 9 Engine Mounting

Illustration Title — Group-Fig. No.

Engine Mounting

Engine Mounting, Front 2.5L [EPE] ..... Fig. 9 - 110
Engine Mounting, Rear 2.5L [EPE] ..... Fig. 9 - 120
Engine Mounting, Front, N1, 3.9L [EHC], 5.9L [EML] ..... Fig. 9 - 130
Engine Mounting, Rear, N1, 3.9L [EHC], 5.9L [EML] ..... Fig. 9 - 135
Engine Mounting, Front, N5, 3.9L [EHC] ..... Fig. 9 - 140
Engine Mounting, Rear, N5, 3.9L [EHC] ..... Fig. 9 - 145
Engine Mounting, Front, N1, 4.7L [EVA] ..... Fig. 9 - 150
Engine Mounting, Rear, N1, 4.7L [EVA] ..... Fig. 9 - 155
Engine Mounting, Front, N5, 4.7L [EVA] ..... Fig. 9 - 160
Engine Mounting, Rear, N5, 4.7L [EVA] ..... Fig. 9 - 165
Engine Mounting, Front, N5, 5.9L [EML] ..... Fig. 9 - 170
Engine Mounting, Rear, N5, 5.9L [EML] ..... Fig. 9 - 175

Engine Mounting, Front 2.5L [EPE]
Figure 9-110

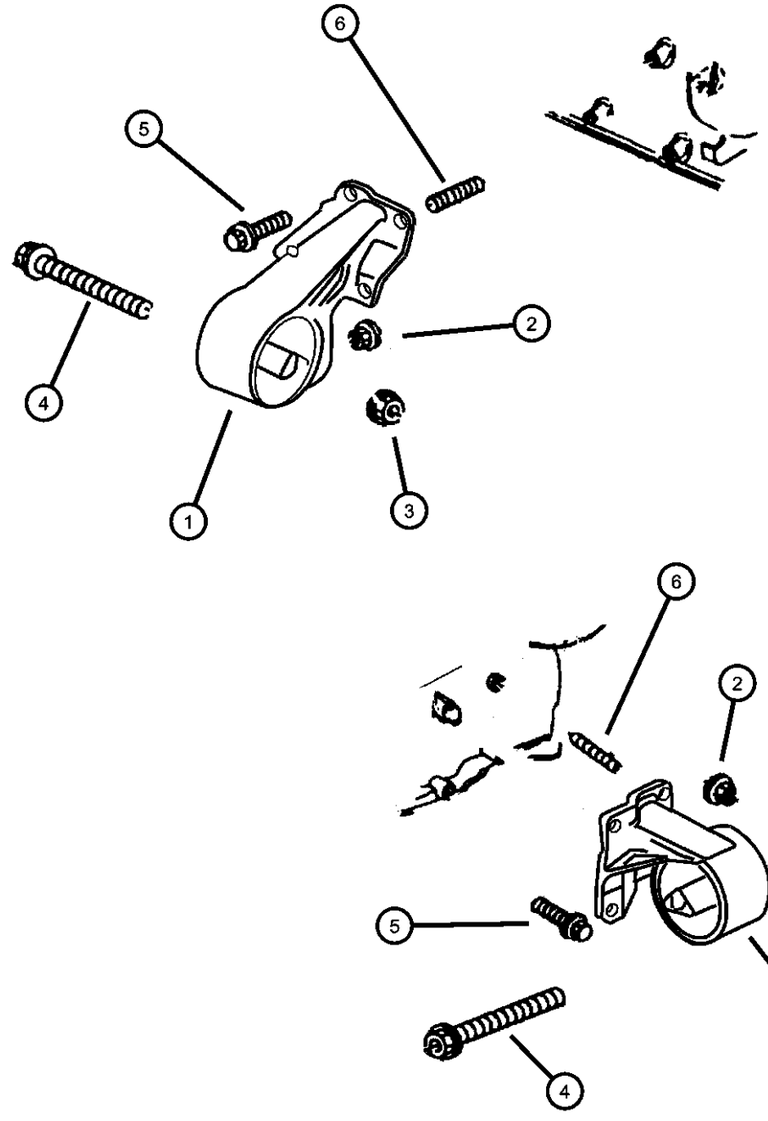

ITEM	PART NUMBER	QTY	LINE	SERIES	BODY	ENGINE	TRANS	TRIM	DESCRIPTION
Note; Sales Codes [EP0]= All 2.5L, 4 Cylinder Gas Engines									
1									INSULATOR, Engine Mount
	52060033AB	1	1			EP0			Left
	52060034	1	1			EP0			Right
2	00154880AA	1				EP0			NUT, Hex, .375-16
3	00154880AA	1							NUT, M12x1.75, (NOT SERVICED)
4	06502960	2							SCREW AND WASHER, Hex Head, M12x1.75x155
5	06035212	2	1			EP0			SCREW, Hex Flange Head, .375-16x1.125
6	06505526AA	1							STUD

DAKOTA (AN)

SERIES	LINE	BODY	ENGINE	TRANSMISSION
L = Dakota (All)	1 = Dakota 2WD	61 = Regular Cab (112 WB)	EPE = 2.5L 4 Cylinder	DGK = 4 Speed Automatic 42RE
	5 = Dakota 4WD	31 = Club Cab (131 WB)	EHC = 3.9L 6 Cylinder	DGT = 4 Speed Automatic 46RE
		84 = Quad Cab (131 WB)	EML = 5.0L 8 Cylinder	DDC = 5 Speed HD Manual
			EVA = 4.7L Magnum V8	DDK = 5 Speed HD Manual
			EP0 = All 2.5L	DG4 = Multispeed Automatic 45RFE
			EH0 = All 3.9L	DG0 = All Automatic Transmissions
			EM0 = All 5.9L	DBB = All Manual Transmissions
			EV0 = All 4.7L	

Engine Mounting, Rear 2.5L [EPE]
Figure 9-120

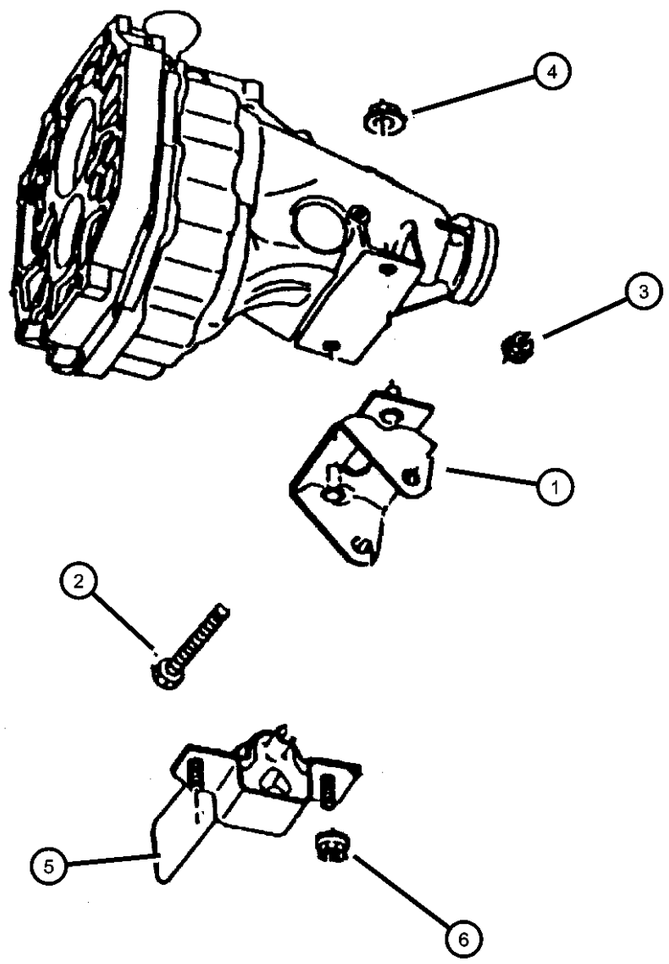

ITEM	PART NUMBER	QTY	LINE	SERIES	BODY	ENGINE	TRANS	TRIM	DESCRIPTION
Note; Sales Codes [DBB]= All Manual Transmissions [EH0]= All 3.9L V-6 Gas Engines [EP0]= All 2.5L, 4 Cylinder Gas Engines [EV0]= All 4.7L V-8 Gas Engines									
1	52058669AC	1	1			EH0, EP0, EV0	DBB		BRACKET, Insulator
2	34202606	1	1						BOLT, Hex Head
3	06100055	1	1						NUT AND WASHER, Hex Nut-Coned Washer, M12 x 1.75
4	06100055	1							NUT, M10x1.50, (NOT SERVICED)
5	52019615	1	1			EH0, EP0			INSULATOR, Engine Mount
6	06101510	2	1				DBB		NUT, Flange Lock, M10x1.50

DAKOTA (AN)

SERIES	LINE	BODY	ENGINE	TRANSMISSION
L = Dakota (All)	1 = Dakota 2WD 5 = Dakota 4WD	61 = Regular Cab (112 WB) 31 = Club Cab (131 WB) 84 = Quad Cab (131 WB)	EPE = 2.5L 4 Cylinder EHC = 3.9L 6 Cylinder EML = 5.0L 8 Cylinder EVA = 4.7L Magnum V8 EP0 = All 2.5L EH0 = All 3.9L EM0 = All 5.9L EV0 = All 4.7L	DGK = 4 Speed Automatic 42RE DGT = 4 Speed Automatic 46RE DDC = 5 Speed HD Manual DDK = 5 Speed HD Manual DG4 = Multispeed Automatic 45RFE DG0 = All Automatic Transmissions DBB = All Manual Transmissions

Engine Mounting, Front, N1, 3.9L [EHC], 5.9L [EML]
Figure 9-130

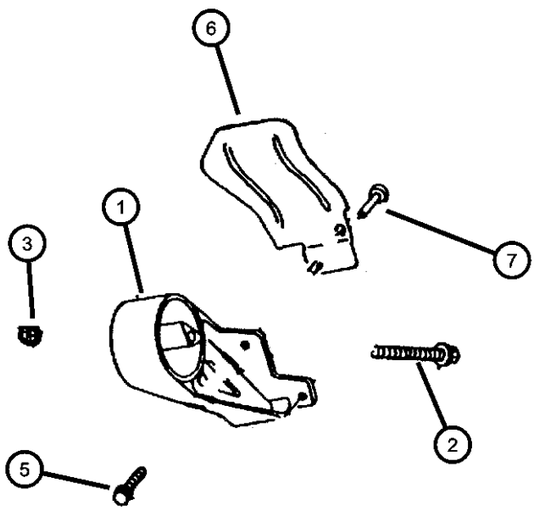

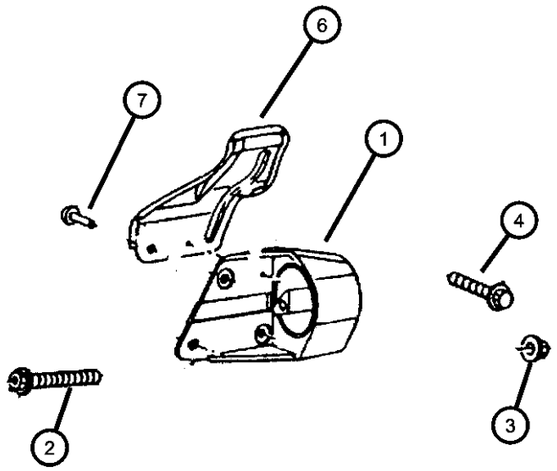

ITEM	PART NUMBER	QTY	LINE	SERIES	BODY	ENGINE	TRANS	TRIM	DESCRIPTION
Note; Sales Codes [EH0]= All 3.9L V-6 Gas Engines [EM0]= All 5.9L V-8 Gas Engines [EP0]= All 2.5L, 4 Cylinder Gas Engines									
1									INSULATOR, Engine Mount
	52009030	1	1			EH0			Right
	52010017	1	1			EH0			Left
	52021009	1	1			EM0			Left
	52022008	1	1			EM0			Right
2	06502960	2							SCREW AND WASHER, Hex Head, M12x1.75x155
3	06502960	2							NUT, M12x1.75, (NOT SERVICED)
4	06034161	3	1			EH0			SCREW AND WASHER, Hex Head, .375-16x1.00
5									SCREW, Hex Flange Head, .375-16x1.125
	06035212	3	1			EH0			
		3	1			EM0, EP0			
6									SHIELD, Engine Mount
	57008125AB	1	1			EH0, EM0			Left
	57008126	1	1			EM0			Right
7	57008126	1							SCREW, (NOT SERVICED)

DAKOTA (AN)

SERIES	LINE	BODY	ENGINE	TRANSMISSION
L = Dakota (All)	1 = Dakota 2WD 5 = Dakota 4WD	61 = Regular Cab (112 WB) 31 = Club Cab (131 WB) 84 = Quad Cab (131 WB)	EPE = 2.5L 4 Cylinder EHC = 3.9L 6 Cylinder EML = 5.0L 8 Cylinder EVA = 4.7L Magnum V8 EP0 = All 2.5L EH0 = All 3.9L EM0 = All 5.9L EV0 = All 4.7L	DGK = 4 Speed Automatic 42RE DGT = 4 Speed Automatic 46RE DDC = 5 Speed HD Manual DDK = 5 Speed HD Manual DG4 = Multispeed Automatic 45RFE DG0 = All Automatic Transmissions DBB = All Manual Transmissions

Engine Mounting, Rear, N1, 3.9L [EHC], 5.9L [EML]
Figure 9-135

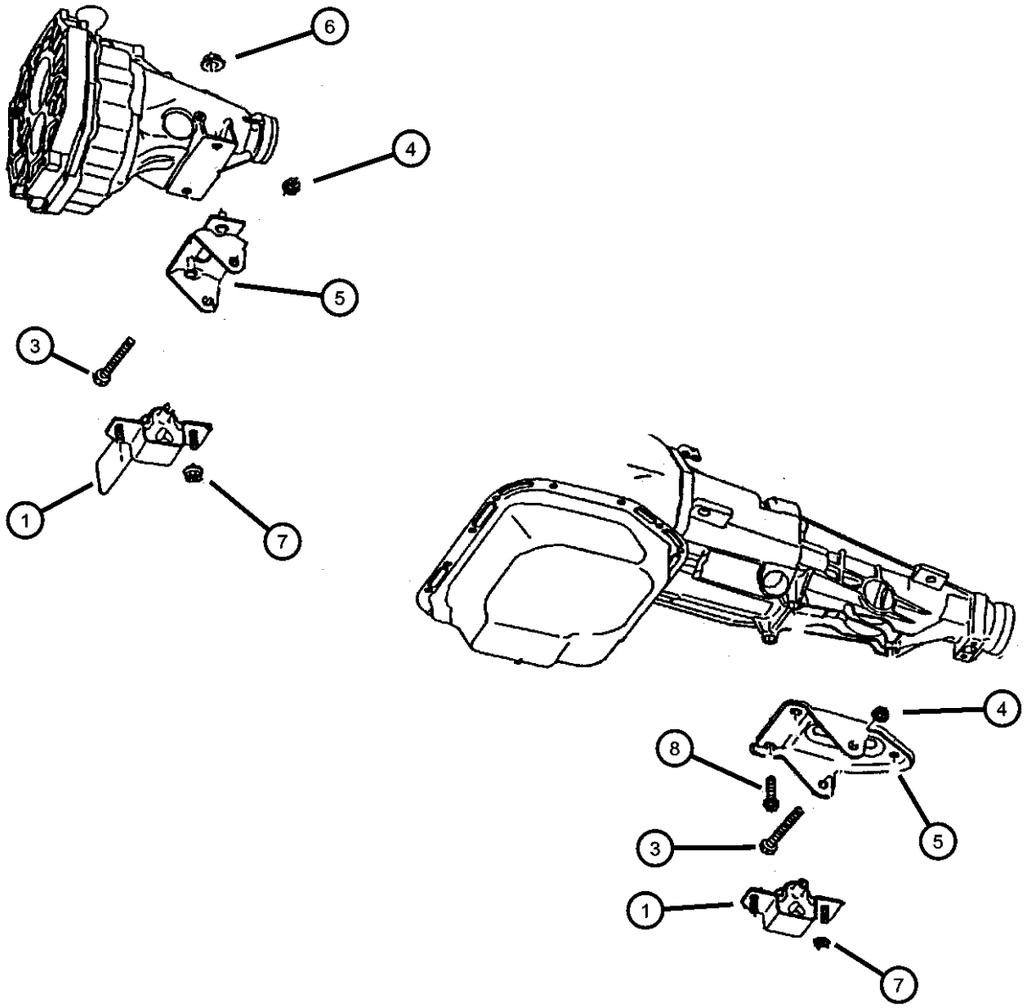

ITEM	PART NUMBER	QTY	LINE	SERIES	BODY	ENGINE	TRANS	TRIM	DESCRIPTION
Note; Sales Codes [DBB]= All Manual Transmissions [DDC]= All 5 Speed Heavy Duty Manual Transmissions [DG0]= All Automatic Transmissions [EH0]= All 3.9L V-6 Gas Engines [EP0]= All 2.5L, 4 Cylinder Gas Engines [EM0]= All 5.9L V-8 Gas Engines [EV0]= All 4.7L Gas Engines									
1	52019615	1	1			EH0, EP0			INSULATOR, Engine Mount
-2	52019394AD	1	1			EM0, EV0			BRACKET AND INSULATOR, Transmission Support
3	34202606	1	1						BOLT, Hex Head
4	06100055	1	1						NUT AND WASHER, Hex Nut-Coned Washer, M12 x 1.75
5									BRACKET, Insulator
	52058636AC	1	1			EH0, EM0	DG0		
	52058669AC	1	1			EH0, EP0, EV0	DBB		
6	52058669AC	1							NUT, M10x1.50, (NOT SERVICED)
7	06101448	2	1						NUT AND WASHER, Hex Nut-Coned Washer, M10 x 1.5
8									SCREW AND WASHER, Hex Head Locking, .437-14x1.25
	06033358	3	1			EH0, EM0	DG0		
		2	1			EH0, EV0	DDC		

DAKOTA (AN)

SERIES	LINE	BODY	ENGINE	TRANSMISSION
L = Dakota (All)	1 = Dakota 2WD 5 = Dakota 4WD	61 = Regular Cab (112 WB) 31 = Club Cab (131 WB) 84 = Quad Cab (131 WB)	EPE = 2.5L 4 Cylinder EHC = 3.9L 6 Cylinder EML = 5.0L 8 Cylinder EVA = 4.7L Magnum V8 EP0 = All 2.5L EH0 = All 3.9L EM0 = All 5.9L EV0 = All 4.7L	DGK = 4 Speed Automatic 42RE DGT = 4 Speed Automatic 46RE DDC = 5 Speed HD Manual DDK = 5 Speed HD Manual DG4 = Multispeed Automatic 45RFE DG0 = All Automatic Transmissions DBB = All Manual Transmissions

Engine Mounting, Front, N5, 3.9L [EHC]
Figure 9-140

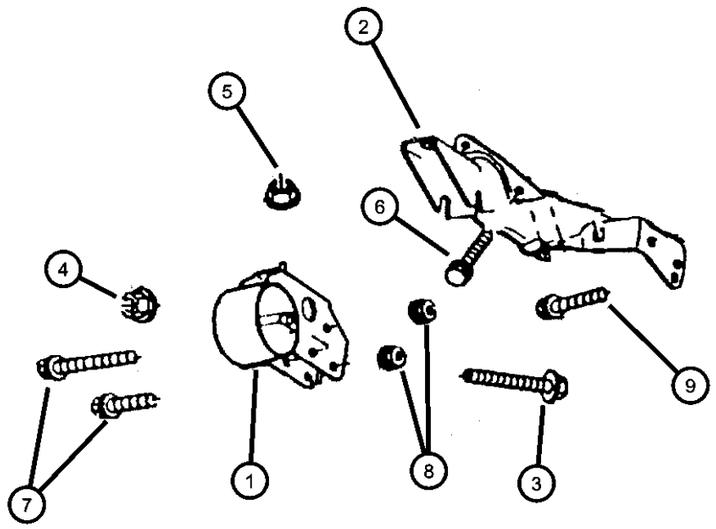

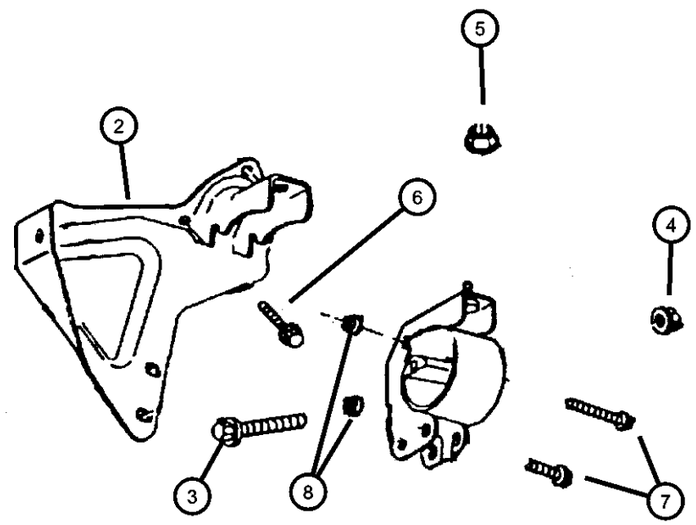

ITEM	PART NUMBER	QTY	LINE	SERIES	BODY	ENGINE	TRANS	TRIM	DESCRIPTION
Note; Sales Codes [EH0]= All 3.9L V-6 Gas Engines [EM0]= All 5.9L V-8 Gas Engines [EV0]= All 4.7L Gas Engines									
1									INSULATOR, Engine Mount
	52022031AC	1	5			EH0			Left
	52022032AB	1	5			EH0			Right
2									BRACKET, Engine Mount
	52020247AC	1	5			EH0, EM0			Left
	52020346AB	1	5			EH0, EM0			Right
3	06502960	2							SCREW AND WASHER, Hex Head, M12x1.75x155
4	06502960	2							NUT, M12x1.75, (NOT SERVICED)
5	06101761	1	5			EH0, EM0			NUT, Coned Washer, M10 x 1.50
6	06034161	6	5						SCREW AND WASHER, Hex Head, .375-16x1.00
7	06101557	1	5			EH0, EM0, EV0			BOLT AND WASHER, Hex Head, M12x1.75x80
8	06100055	4							NUT AND WASHER, Hex Nut-Coned Washer, M12 x 1.75
9	06100055	4							BOLT, Hex Head, .437-14x1.75, (NOT SERVICED)

DAKOTA (AN)

SERIES	LINE	BODY	ENGINE	TRANSMISSION
L = Dakota (All)	1 = Dakota 2WD 5 = Dakota 4WD	61 = Regular Cab (112 WB) 31 = Club Cab (131 WB) 84 = Quad Cab (131 WB)	EPE = 2.5L 4 Cylinder EHC = 3.9L 6 Cylinder EML = 5.0L 8 Cylinder EVA = 4.7L Magnum V8 EP0 = All 2.5L EH0 = All 3.9L EM0 = All 5.9L EV0 = All 4.7L	DGK = 4 Speed Automatic 42RE DGT = 4 Speed Automatic 46RE DDC = 5 Speed HD Manual DDK = 5 Speed HD Manual DG4 = Multispeed Automatic 45RFE DG0 = All Automatic Transmissions DBB = All Manual Transmissions

Engine Mounting, Rear, N5, 3.9L [EHC]
Figure 9-145

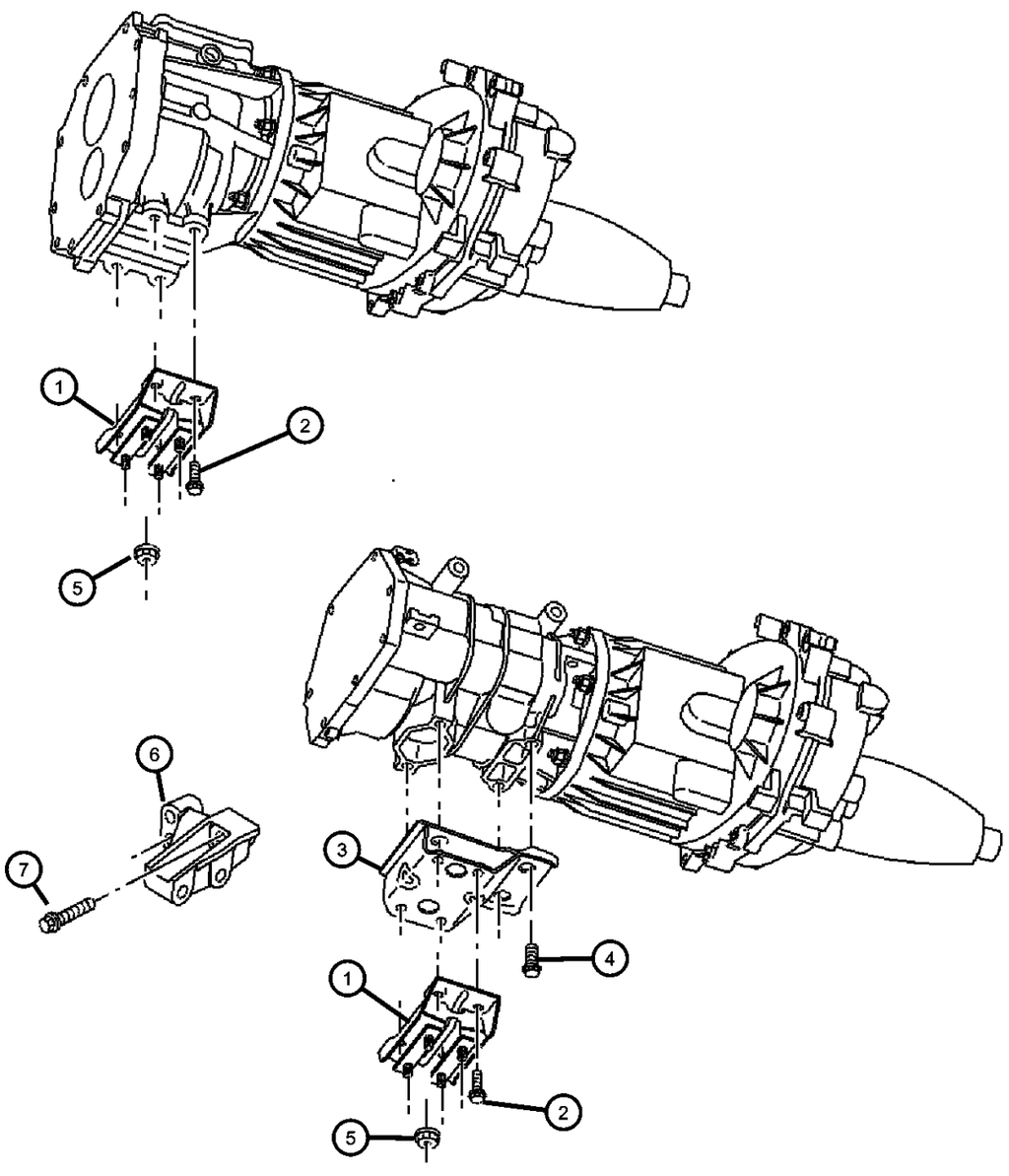

ITEM	PART NUMBER	QTY	LINE	SERIES	BODY	ENGINE	TRANS	TRIM	DESCRIPTION
Note; Sales Codes [DBB]= All Manual Transmissions [DG0]= All Automatic Transmissions [EH0]= All 3.9L V-6 Gas Engines [EM0]= All 5.9L V-8 Gas Engines [EV0]= All 4.7L Gas Engines									
1	52019998	1	5			EH0, EV0			BRACKET AND INSULATOR, Transmission Support
2									SCREW AND WASHER, Hex Head Locking, .437-14x1.25
	06033358	4	5				DBB		
		4	5				DG0		
3	52058553	1	5			EH0, EM0	DG0		BRACKET, Insulator
4									SCREW AND WASHER, Hex Head Locking, .437-14x1.25
	06033358	4	5				DBB		
		4	5				DG0		
5	06101467	4	5						NUT, Hex Flange, M8x1.25
6	52020470AC	1	5			EH0, EM0			BRACKET, Transmission Mount, Axle Pinion Nose To Transmission
7	06506560AA	2	5						SCREW AND WASHER, Hex Head, Pinion Nose Bracket To Pinion Nose

DAKOTA (AN)

SERIES	LINE	BODY	ENGINE	TRANSMISSION
L = Dakota (All)	1 = Dakota 2WD	61 = Regular Cab (112 WB)	EPE = 2.5L 4 Cylinder	DGK = 4 Speed Automatic 42RE
	5 = Dakota 4WD	31 = Club Cab (131 WB)	EHC = 3.9L 6 Cylinder	DGT = 4 Speed Automatic 46RE
		84 = Quad Cab (131 WB)	EML = 5.0L 8 Cylinder	DDC = 5 Speed HD Manual
			EVA = 4.7L Magnum V8	DDK = 5 Speed HD Manual
			EP0 = All 2.5L	DG4 = Multispeed Automatic 45RFE
			EH0 = All 3.9L	DG0 = All Automatic Transmissions
			EM0 = All 5.9L	DBB = All Manual Transmissions
			EV0 = All 4.7L	

Engine Mounting, Front, N1, 4.7L [EVA]
Figure 9-150

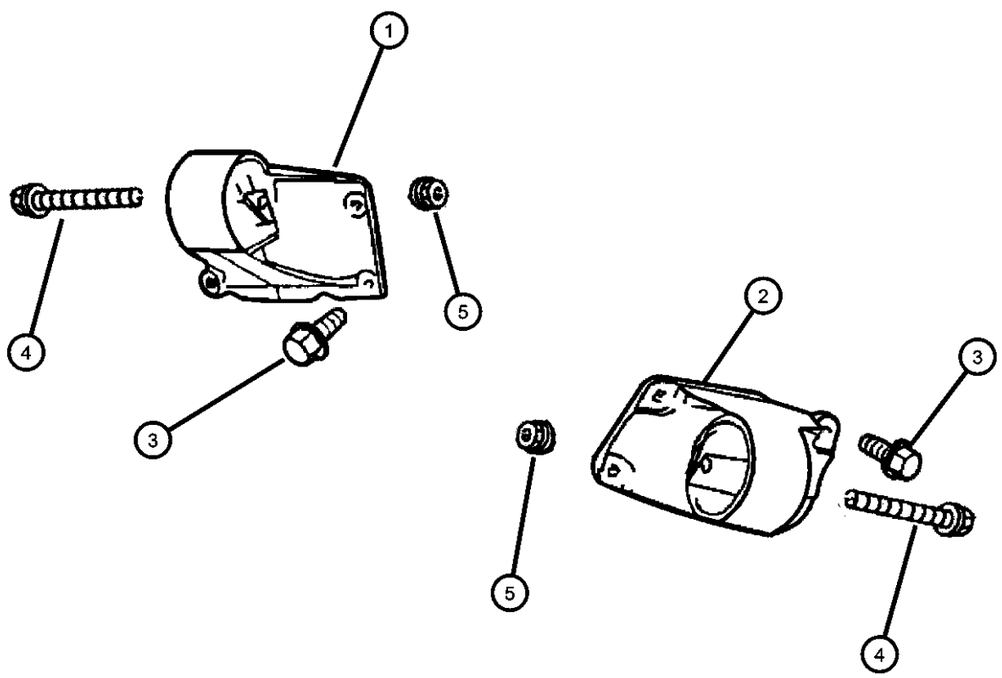

ITEM	PART NUMBER	QTY	LINE	SERIES	BODY	ENGINE	TRANS	TRIM	DESCRIPTION
Note; Sales Codes									
[EV0]= All 4.7L Gas Engines									
1	52019961AC	1	1			EV0			INSULATOR, Engine MountLeft
2	52019962AC	1	1			EV0			INSULATOR, Engine MountRight
3	06503699	4	1			EV0			SCREW AND WASHER, Hex Head, M10x1.5x28
4	06502960	2							SCREW AND WASHER, Hex Head, M12x1.75x155
5	06502960	2							NUT, M12x1.75, (NOT SERVICED)

DAKOTA (AN)

SERIES	LINE	BODY	ENGINE	TRANSMISSION
L = Dakota (All)	1 = Dakota 2WD	61 = Regular Cab (112 WB)	EPE = 2.5L 4 Cylinder	DGK = 4 Speed Automatic 42RE
	5 = Dakota 4WD	31 = Club Cab (131 WB)	EHC = 3.9L 6 Cylinder	DGT = 4 Speed Automatic 46RE
		84 = Quad Cab (131 WB)	EML = 5.0L 8 Cylinder	DDC = 5 Speed HD Manual
			EVA = 4.7L Magnum V8	DDK = 5 Speed HD Manual
			EP0 = All 2.5L	DG4 = Multispeed Automatic 45RFE
			EH0 = All 3.9L	DG0 = All Automatic Transmissions
			EM0 = All 5.9L	DBB = All Manual Transmissions
			EV0 = All 4.7L	

Engine Mounting, Rear, N1, 4.7L [EVA]
Figure 9-155

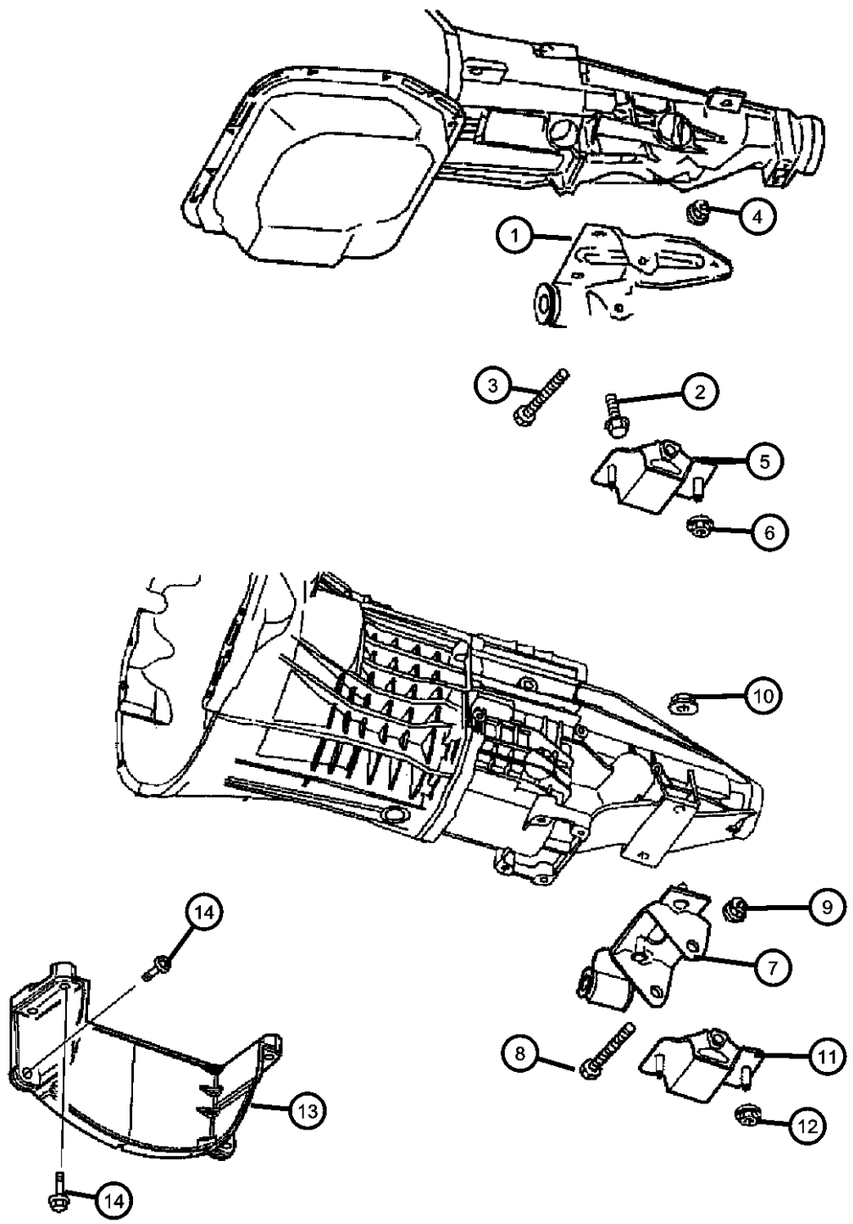

ITEM	PART NUMBER	QTY	LINE	SERIES	BODY	ENGINE	TRANS	TRIM	DESCRIPTION
Note; Sales Codes [DBB]= All Manual Transmissions [DDC]= All 5 Speed Heavy Duty Manual Transmissions [DG4]= Multi Speed Automatic Transmissions 45RFE [DG0]= All Auto Matic Transmissions [EH0]= All 3.9L V-6 Gas Engines [EP0]= All 2.5L, 4 Cylinder Gas Engines [EM0]= All 5.9L V-8 Gas Engines [EV0]= All 4.7L Gas Engines									
1	52019959	1	1				DG4		BRACKET, Transmission Mount
2	34202606	1	1						BOLT, Hex Head
3									SCREW AND WASHER, Hex Head Locking, .437-14x1.25
	06033358	3	1			EV0	DG0		
		2	1			EH0, EV0	DDC		
4	06100055	1	1						NUT AND WASHER, Hex Nut-Coned Washer, M12 x 1.75
5	52019394AD	1	1			EM0, EV0			BRACKET AND INSULATOR, Transmission Support
6	06101510	2	1				DBB		NUT, Flange Lock, M10x1.50
7	52058669AC	1	1			EH0, EP0, EV0	DBB		BRACKET, Insulator
8	34202606	1	1						BOLT, Hex Head
9	06100055	1	1						NUT AND WASHER, Hex Nut-Coned Washer, M12 x 1.75
10	06101510	2	1				DBB		NUT, Flange Lock, M10x1.50
11	52019394AD	1	1			EM0, EV0			BRACKET AND INSULATOR, Transmission Support
12	06101448	2	1						NUT AND WASHER, Hex Nut-Coned Washer, M10 x 1.5
13									COVER, Bedplate
	53020885	1				EV0	DG0		
	53020974	1				EV0	DBB		
14	06101985	2	1			EH0, EV0	DDC		SCREW AND WASHER, M10x1.50x45.00

DAKOTA (AN)

SERIES	LINE	BODY	ENGINE	TRANSMISSION
L = Dakota (All)	1 = Dakota 2WD 5 = Dakota 4WD	61 = Regular Cab (112 WB) 31 = Club Cab (131 WB) 84 = Quad Cab (131 WB)	EPE = 2.5L 4 Cylinder EHC = 3.9L 6 Cylinder EML = 5.0L 8 Cylinder EVA = 4.7L Magnum V8 EP0 = All 2.5L EH0 = All 3.9L EM0 = All 5.9L EV0 = All 4.7L	DGK = 4 Speed Automatic 42RE DGT = 4 Speed Automatic 46RE DDC = 5 Speed HD Manual DDK = 5 Speed HD Manual DG4 = Multispeed Automatic 45RFE DG0 = All Automatic Transmissions DBB = All Manual Transmissions

Engine Mounting, Front, N5, 4.7L [EVA]
Figure 9-160

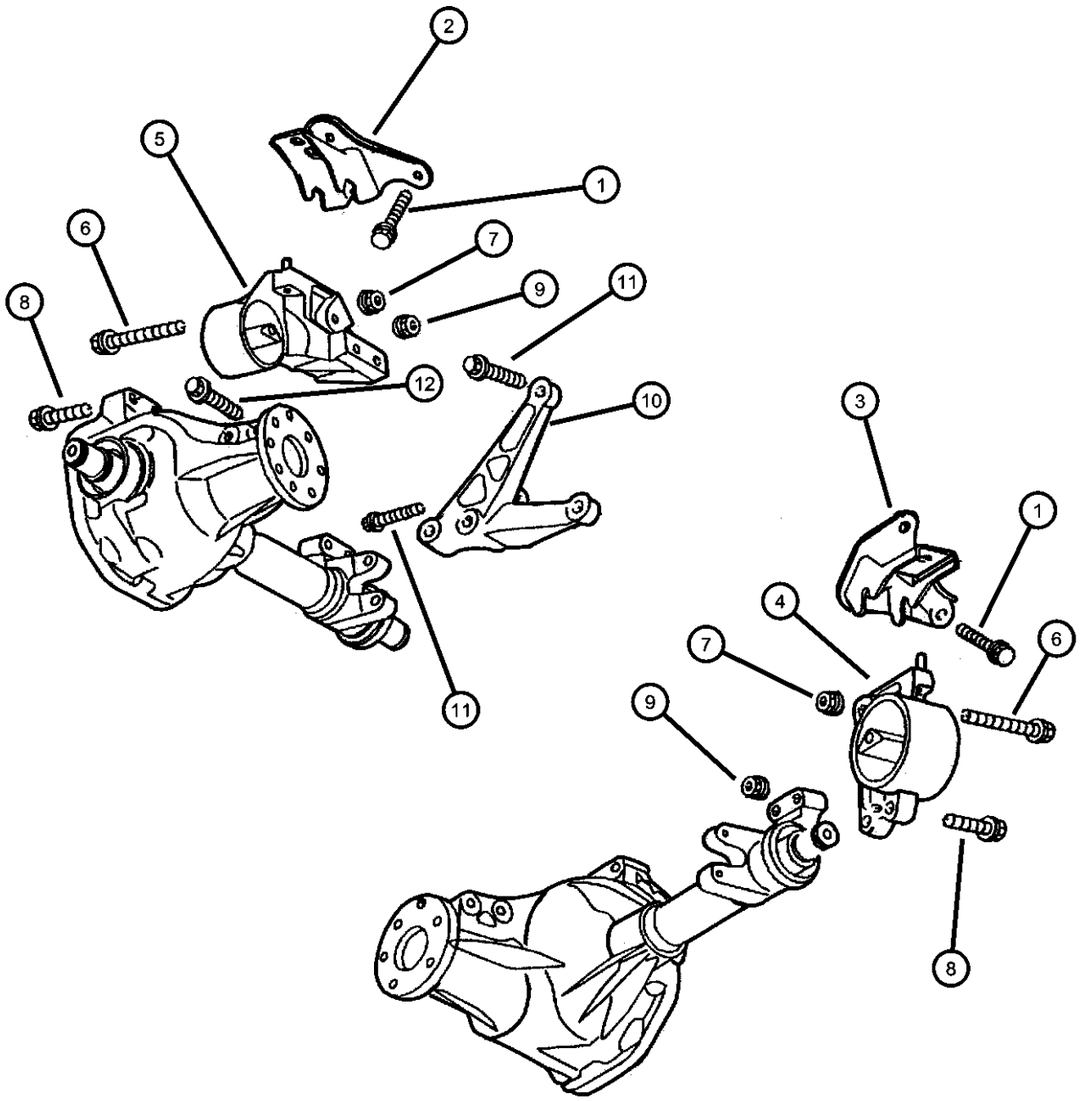

ITEM	PART NUMBER	QTY	LINE	SERIES	BODY	ENGINE	TRANS	TRIM	DESCRIPTION
Note; Sales Codes [DBB]= All Manual Transmissions [DG4]= Multi Speed Automatic Transmission 45RFE [EH0]= All 3.9L V-6 Gas Engines [EM0]= All 5.9L V-8 Gas Engines [EV0]= All 4.7L Gas Engines									
1	06503699	3	5			EV0			SCREW AND WASHER, Hex Head, M10x1.5x28
2	52020257AB	1	5			EV0			BRACKET, Engine MountLeft
3	52019958AC	1	5			EV0			BRACKET, Engine MountRight
4	52020244AA	1	5			EV0			INSULATOR, Engine MountRight
5	52020243AB	1	5			EV0			INSULATOR, Engine MountLeft
6	06101557	1	5			EH0, EM0, EV0			BOLT AND WASHER, Hex Head, M12x1.75x80
7	06101557	1							NUT, M12x1.75, (NOT SERVICED)
8	06502725	2	5			EH0, EM0, EV0			BOLT, Hex Flange, M12x1.75x90
9	06502697	2	5						NUT, Hex Flange Lock, M12x1.75
10									BRACKET, Transmission Mount
	52020471AC	1	5			EV0	DBB		
	52020472AC	1	5			EV0	DG4		
11	06101062	2	5			EV0	DG4		SCREW AND WASHER, Hex Head, M10x1.5x40
12	06101062	2							SCREW AND WASHER, Hex Head, M12x1.75x60, (NOT SERVICED)

DAKOTA (AN)

SERIES	LINE	BODY	ENGINE	TRANSMISSION
L = Dakota (All)	1 = Dakota 2WD 5 = Dakota 4WD	61 = Regular Cab (112 WB) 31 = Club Cab (131 WB) 84 = Quad Cab (131 WB)	EPE = 2.5L 4 Cylinder EHC = 3.9L 6 Cylinder EML = 5.0L 8 Cylinder EVA = 4.7L Magnum V8 EP0 = All 2.5L EH0 = All 3.9L EM0 = All 5.9L EV0 = All 4.7L	DGK = 4 Speed Automatic 42RE DGT = 4 Speed Automatic 46RE DDC = 5 Speed HD Manual DDK = 5 Speed HD Manual DG4 = Multispeed Automatic 45RFE DG0 = All Automatic Transmissions DBB = All Manual Transmissions

Engine Mounting, Rear, N5, 4.7L [EVA]
Figure 9-165

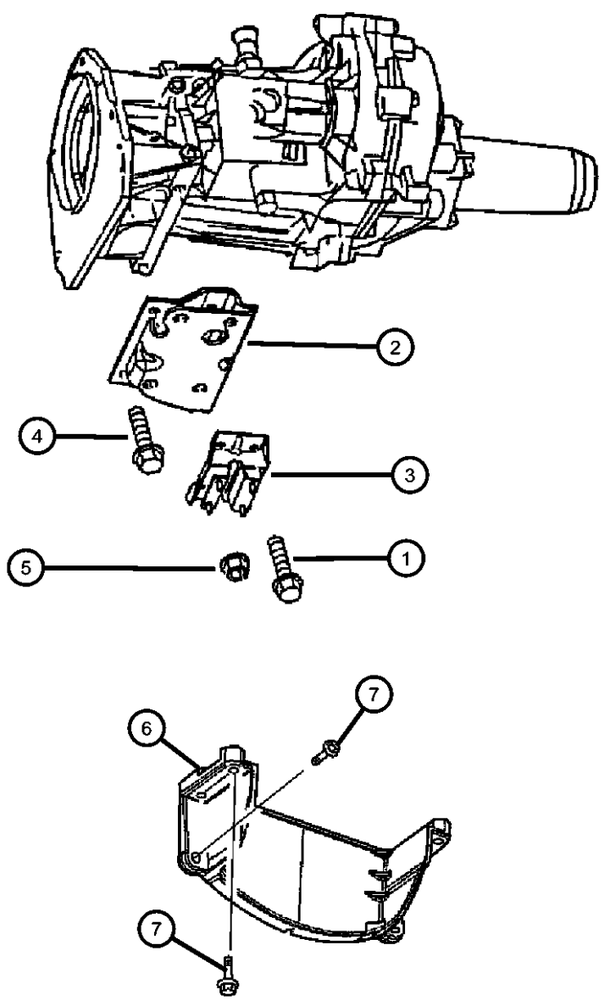

ITEM	PART NUMBER	QTY	LINE	SERIES	BODY	ENGINE	TRANS	TRIM	DESCRIPTION
Note; Sales Codes [DBB]= All Manual Transmissions [DG4]= Multi Speed Automatic Transmission 45RFE [EH0]= All 3.9L V-6 Gas Engines [EV0]= All 4.7L Gas Engines									
1									SCREW AND WASHER, Hex Head Locking, .437-14x1.25
	06033358	4	5				DBB		
		4	5				DG0		
2	52019960AB	1	5			EV0	DG4		BRACKET, Transmission Mount
3	52019998	1	5			EH0, EV0			BRACKET AND INSULATOR, Transmission Support
4	06503699	4	5			EV0	DG0		SCREW AND WASHER, Hex Head, M10x1.5x28
5	06101467	4	5						NUT, Hex Flange, M8x1.25
6									COVER, Bedplate
	53020885	1				EV0	DG0		
	53020974	1				EV0	DBB		
7	06101985	2	1			EH0, EV0	DDC		SCREW AND WASHER, M10x1.50x45.00

DAKOTA (AN)

SERIES	LINE	BODY	ENGINE	TRANSMISSION
L = Dakota (All)	1 = Dakota 2WD 5 = Dakota 4WD	61 = Regular Cab (112 WB) 31 = Club Cab (131 WB) 84 = Quad Cab (131 WB)	EPE = 2.5L 4 Cylinder EHC = 3.9L 6 Cylinder EML = 5.0L 8 Cylinder EVA = 4.7L Magnum V8 EP0 = All 2.5L EH0 = All 3.9L EM0 = All 5.9L EV0 = All 4.7L	DGK = 4 Speed Automatic 42RE DGT = 4 Speed Automatic 46RE DDC = 5 Speed HD Manual DDK = 5 Speed HD Manual DG4 = Multispeed Automatic 45RFE DG0 = All Automatic Transmissions DBB = All Manual Transmissions

Engine Mounting, Front, N5, 5.9L [EML]
Figure 9-170

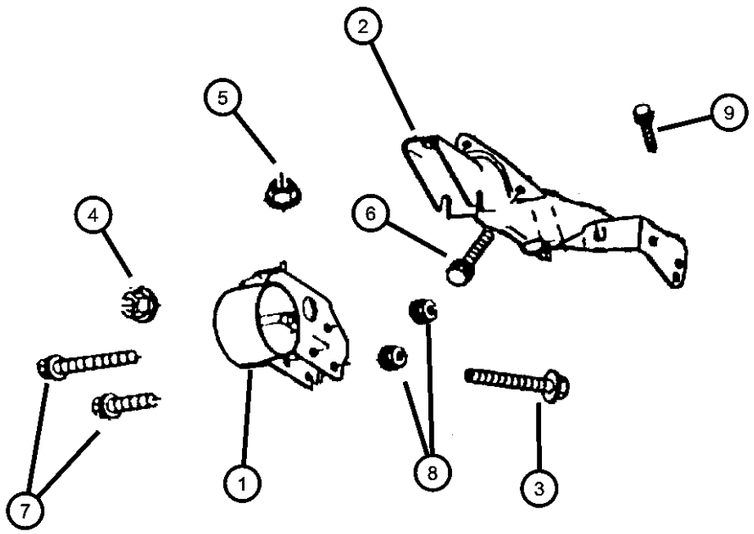

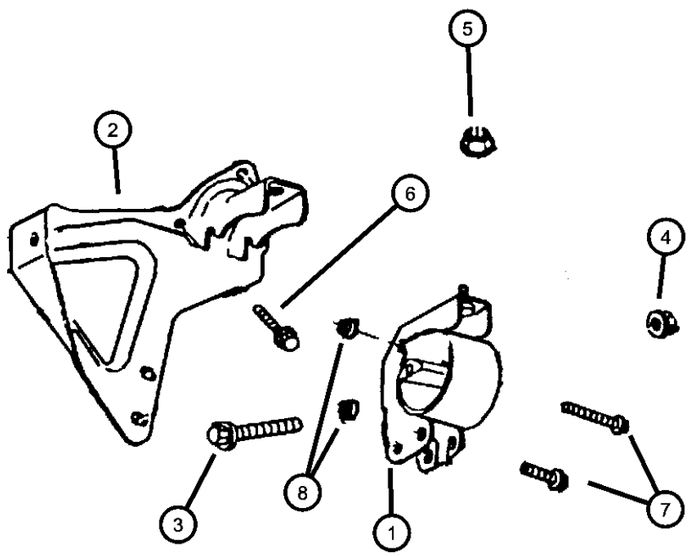

ITEM	PART NUMBER	QTY	LINE	SERIES	BODY	ENGINE	TRANS	TRIM	DESCRIPTION
Note; Sales Codes [EH0]= All 3.9L V-6 Gas Engines [EM0]= All 5.9L V-8 Gas Engines [EV0]= All 4.7L Gas Engines									
1									INSULATOR, Engine Mount
	52020243AB	1	5			EM0			31,61, Left
	52020244AA	1	5			EM0			84, Right
	52020342AA	1	5			EM0			31,61, Right
	52020345AB	1	5			EM0			84, Left
2									BRACKET, Engine Mount
	52020247AC	1	5			EH0, EM0			Left
	52020346AB	1	5			EH0, EM0			Right
3	06502960	2							SCREW AND WASHER, Hex Head, M12x1.75x155
4	06502960	2							NUT, M12x1.75, (NOT SERVICED)
5	06101761	1	5			EH0, EM0			NUT, Coned Washer, M10 x 1.50
6	06034161	6	5						SCREW AND WASHER, Hex Head, .375-16x1.00
7	06101557	1	5			EH0, EM0, EV0			BOLT AND WASHER, Hex Head, M12x1.75x80
8	06100055	4							NUT AND WASHER, Hex Nut-Coned Washer, M12 x 1.75
9	06100055	4							SCREW, (NOT SERVICED)

DAKOTA (AN)

SERIES	LINE	BODY	ENGINE	TRANSMISSION
L = Dakota (All)	1 = Dakota 2WD 5 = Dakota 4WD	61 = Regular Cab (112 WB) 31 = Club Cab (131 WB) 84 = Quad Cab (131 WB)	EPE = 2.5L 4 Cylinder EHC = 3.9L 6 Cylinder EML = 5.0L 8 Cylinder EVA = 4.7L Magnum V8 EP0 = All 2.5L EH0 = All 3.9L EM0 = All 5.9L EV0 = All 4.7L	DGK = 4 Speed Automatic 42RE DGT = 4 Speed Automatic 46RE DDC = 5 Speed HD Manual DDK = 5 Speed HD Manual DG4 = Multispeed Automatic 45RFE DG0 = All Automatic Transmissions DBB = All Manual Transmissions

Engine Mounting, Rear, N5, 5.9L [EML]
Figure 9-175

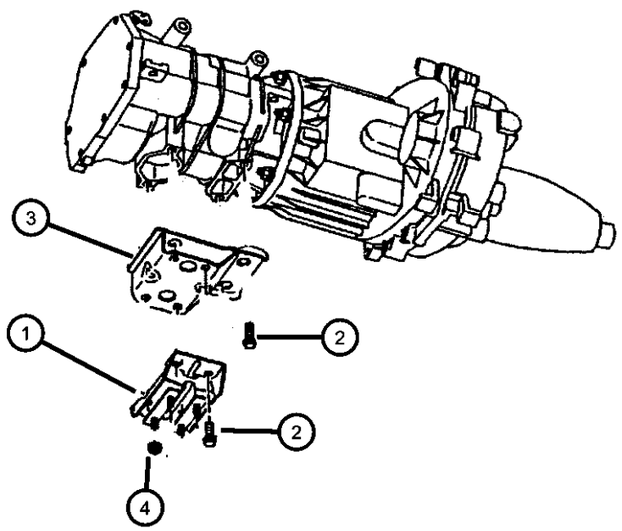

ITEM	PART NUMBER	QTY	LINE	SERIES	BODY	ENGINE	TRANS	TRIM	DESCRIPTION
Note; Sales Codes [DG0]= All Automatic Transmissions [EH0]= All 3.9L V-6 Gas Engines [EM0]= All 5.9L V-8 Gas Engines									
1	52020845AA	1	5			EM0			BRACKET AND INSULATOR, Transmission Support
2	06033358	4	5				DG0		SCREW AND WASHER, Hex Head Locking, .437-14x1.25
3	52058553	1	5			EH0, EM0	DG0		BRACKET, Insulator
4	06101467	4	5						NUT, Hex Flange, M8x1.25
-5	52020470AC	1	5			EH0, EM0			BRACKET, Transmission Mount, Axle Pinion Nose To Transmission
-6	06506560AA	2	5						SCREW AND WASHER, Hex Head, Pinion Nose Bracket To Pinion

DAKOTA (AN)

SERIES	LINE	BODY	ENGINE	TRANSMISSION
L = Dakota (All)	1 = Dakota 2WD 5 = Dakota 4WD	61 = Regular Cab (112 WB) 31 = Club Cab (131 WB) 84 = Quad Cab (131 WB)	EPE = 2.5L 4 Cylinder EHC = 3.9L 6 Cylinder EML = 5.0L 8 Cylinder EVA = 4.7L Magnum V8 EP0 = All 2.5L EH0 = All 3.9L EM0 = All 5.9L EV0 = All 4.7L	DGK = 4 Speed Automatic 42RE DGT = 4 Speed Automatic 46RE DDC = 5 Speed HD Manual DDK = 5 Speed HD Manual DG4 = Multispeed Automatic 45RFE DG0 = All Automatic Transmissions DBB = All Manual Transmissions

Group - 2.5L4

Engine 2.5L Four Cylinder

2.5L4-200
Cylinder Head

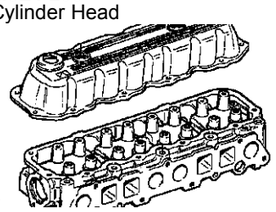

2.5L4-300
Cylinder Block

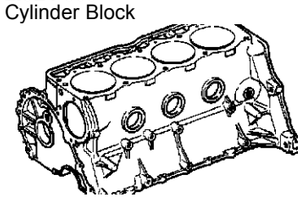

2.5L4-400
Crankshaft, Piston and Drive Plate

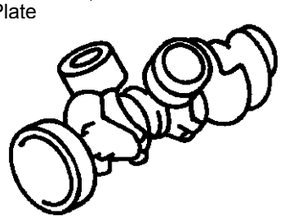

2.5L4-500
Camshafts & Valves

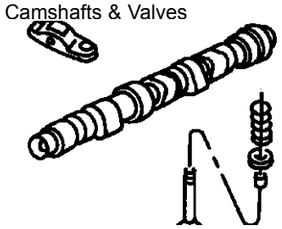

2.5L4-600
Timing Belt and Cover

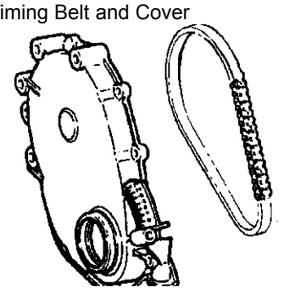

2.5L4-700
Engine Oiling

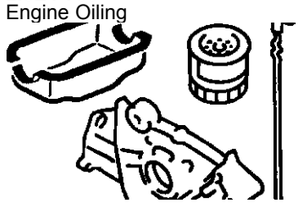

2.5L4-800
Manifolds

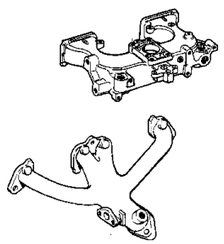

2.5L4-900
Crankcase Ventilation

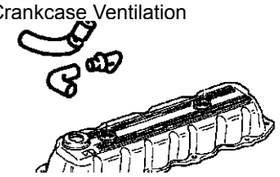

Group - 2.5L4 Engine 2.5L Four Cylinder

Illustration Title — Group-Fig. No.

Cylinder Head
Cylinder Head, 2.5L [EPE] ..... Fig. 2.5L4 - 210

Cylinder Block
Cylinder Block, 2.5L [EPE] ..... Fig. 2.5L4 - 310

Crankshaft, Piston and Drive Plate
Crankshaft, Piston and Torque Converter, 2.5L [EPE] ..... Fig. 2.5L4 - 410

Camshafts & Valves
Camshaft and Valves, 2.5L [EPE] ..... Fig. 2.5L4 - 510

Timing Belt and Cover
Timing Belt and Cover, 2.5L [EPE] ..... Fig. 2.5L4 - 610

Engine Oiling
Engine Oiling, 2.5L [EPE] ..... Fig. 2.5L4 - 710

Manifolds
Manifold, Intake and Exhaust, 2.5L [EPE] ..... Fig. 2.5L4 - 810

Crankcase Ventilation
Crankcase Ventilation, 2.5L [EPE] ..... Fig. 2.5L4 - 910

Cylinder Head, 2.5L [EPE]
Figure 2.5L4-210

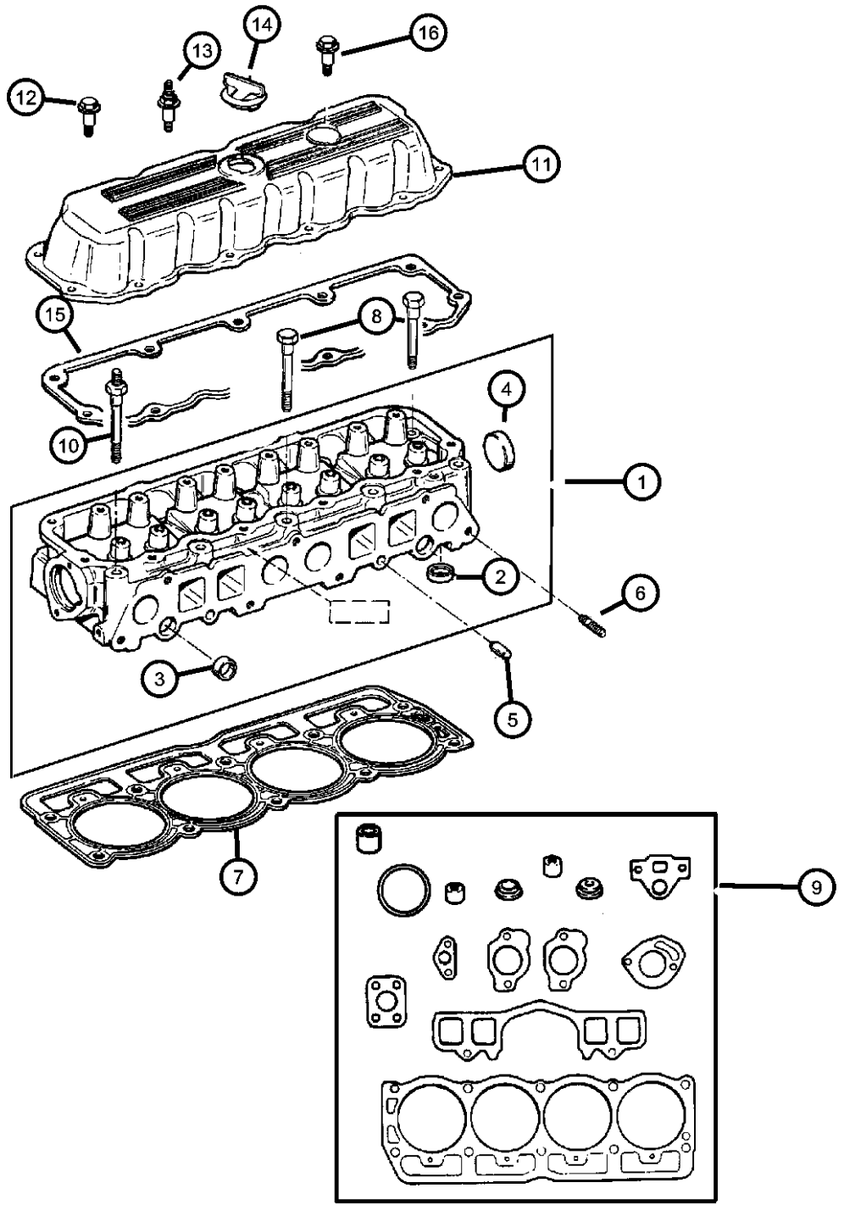

ITEM	PART NUMBER	QTY	LINE	SERIES	BODY	ENGINE	TRANS	TRIM	DESCRIPTION
Note; Sales Codes									
[EP0]= All 2.5L, 4 Cylinder Gas Engines									
1	33007115AB	1				EP0			HEAD, Cylinder
2	33007142	4				EP0			SEAT, Exhaust Valve
3	J3172319	4				EP0			PLUG, Cylinder Block Oil Hole
4	J3105394	1				EP0			PLUG, Cylinder Block Oil Hole
5	J3172318	2				EP0			DOWEL, Cylinder Head To Intake
6	06036193AA	2				EP0			STUD, .375-16/.375-24x1.75
7	53009549AB	1				EP0			GASKET, Cylinder Head
8	06035514	5				EP0			BOLT, Cylinder Head
9	04798992AD	1				EP0			GASKET PACKAGE, Engine
10	06035516	4				EP0			STUD, Double Ended, .50-13/.437-14x6.00
11	53010428AB	1				EP0			COVER, Cylinder Head
12	53010428AB	1							BOLT, Hex Head, .250-20x1.130, (NOT SERVICED)
13	06035968AA	10				EP0			STUD, .250-20x2.00
14	53020555	1				EP0			CAP, Oil Filler
15	53020555	1							GASKET, Cylinder Cover, RTV Sealant, (NOT SERVICED)
16	53020555	1							STUD, Double Ended, .25-20x1.97, (NOT SERVICED)

DAKOTA (AN)

SERIES	LINE	BODY	ENGINE	TRANSMISSION
L = Dakota (All)	1 = Dakota 2WD	61 = Regular Cab (112 WB)	EPE = 2.5L 4 Cylinder	DGK = 4 Speed Automatic 42RE
	5 = Dakota 4WD	31 = Club Cab (131 WB)	EHC = 3.9L 6 Cylinder	DGT = 4 Speed Automatic 46RE
		84 = Quad Cab (131 WB)	EML = 5.0L 8 Cylinder	DDC = 5 Speed HD Manual
			EVA = 4.7L Magnum V8	DDK = 5 Speed HD Manual
			EP0 = All 2.5L	DG4 = Multispeed Automatic 45RFE
			EH0 = All 3.9L	DG0 = All Automatic Transmissions
			EM0 = All 5.9L	DBB = All Manual Transmissions
			EV0 = All 4.7L	

Cylinder Block, 2.5L [EPE]
Figure 2.5L4-310

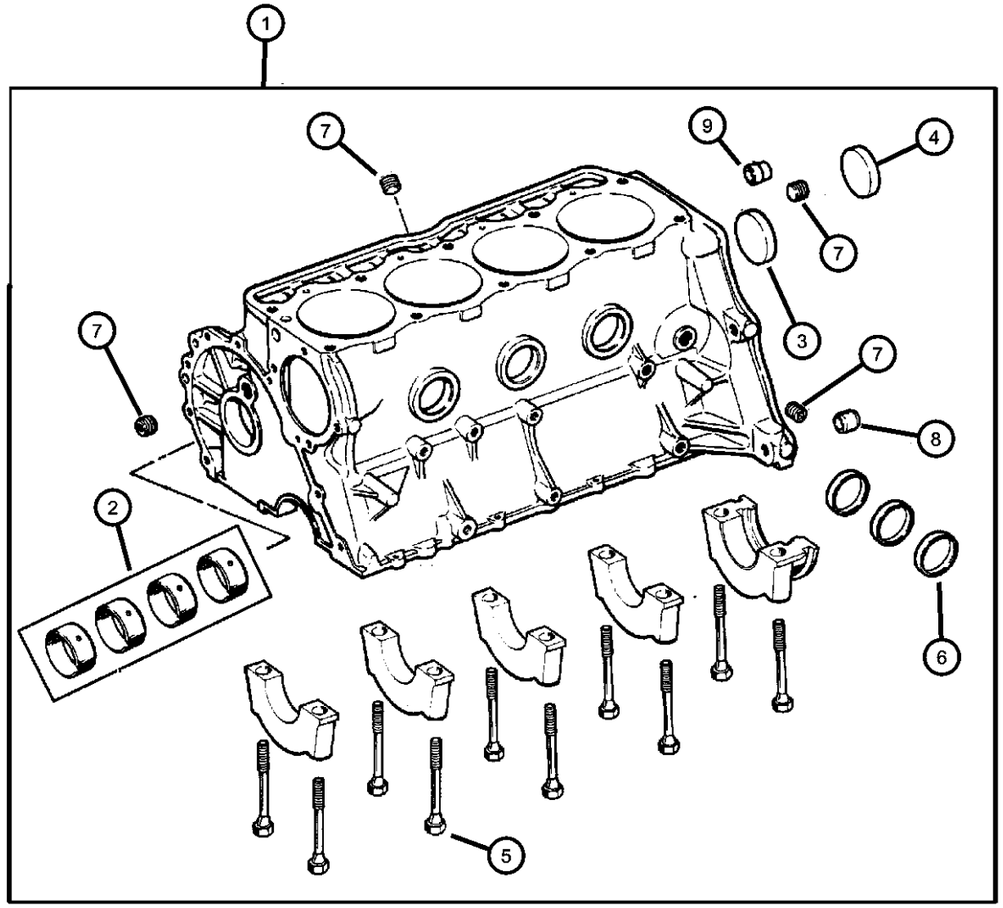

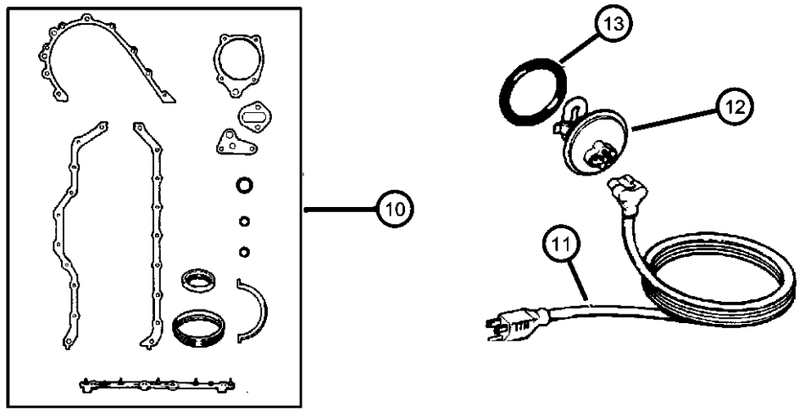

ITEM	PART NUMBER	QTY	LINE	SERIES	BODY	ENGINE	TRANS	TRIM	DESCRIPTION
Note; Sales Codes									
[EP0]= All 2.5L, 4 Cylinder Gas Engines									
1	04856744	1				EP0			BLOCK, Short
2	04636985AB	1				EP0			BEARING PACKAGE, Camshaft, Standard Size
3	J3172313	1				EP0			PLUG, Camshaft
4	J3105394	1				EP0			PLUG, Cylinder Block Oil Hole
5	J4006948	10				EP0			BOLT, Hex Head, .50-13x2.97
6	J4006580	3				EP0			PLUG, Cylinder Block Oil Hole
7	06034166	3				EP0			PLUG, Cylinder Block Oil Hole
8	J4006953	1				EP0			DOWEL, Block To Cylinder Head
9	J3241332	1				EP0			DOWEL, Clutch Housing To Block
10	04713023AC	1				EP0			GASKET PACKAGE, Engine
11	56020234	1				EP0			CORD, Engine Block Heater
12	82300749	1				EP0			HEATER KIT, Engine Block
13	82300749	1							O RING, Engine Block Heater, Serviced In Item# 12, (NOT SERVICED)
-14	04713023AC	1				EP0			GASKET PACKAGE, Engine

DAKOTA (AN)

SERIES	LINE	BODY	ENGINE	TRANSMISSION
L = Dakota (All)	1 = Dakota 2WD	61 = Regular Cab (112 WB)	EPE = 2.5L 4 Cylinder	DGK = 4 Speed Automatic 42RE
	5 = Dakota 4WD	31 = Club Cab (131 WB)	EHC = 3.9L 6 Cylinder	DGT = 4 Speed Automatic 46RE
		84 = Quad Cab (131 WB)	EML = 5.0L 8 Cylinder	DDC = 5 Speed HD Manual
			EVA = 4.7L Magnum V8	DDK = 5 Speed HD Manual
			EP0 = All 2.5L	DG4 = Multispeed Automatic 45RFE
			EH0 = All 3.9L	DG0 = All Automatic Transmissions
			EM0 = All 5.9L	DBB = All Manual Transmissions
			EV0 = All 4.7L	

Crankshaft, Piston and Torque Converter, 2.5L [EPE]
Figure 2.5L4-410

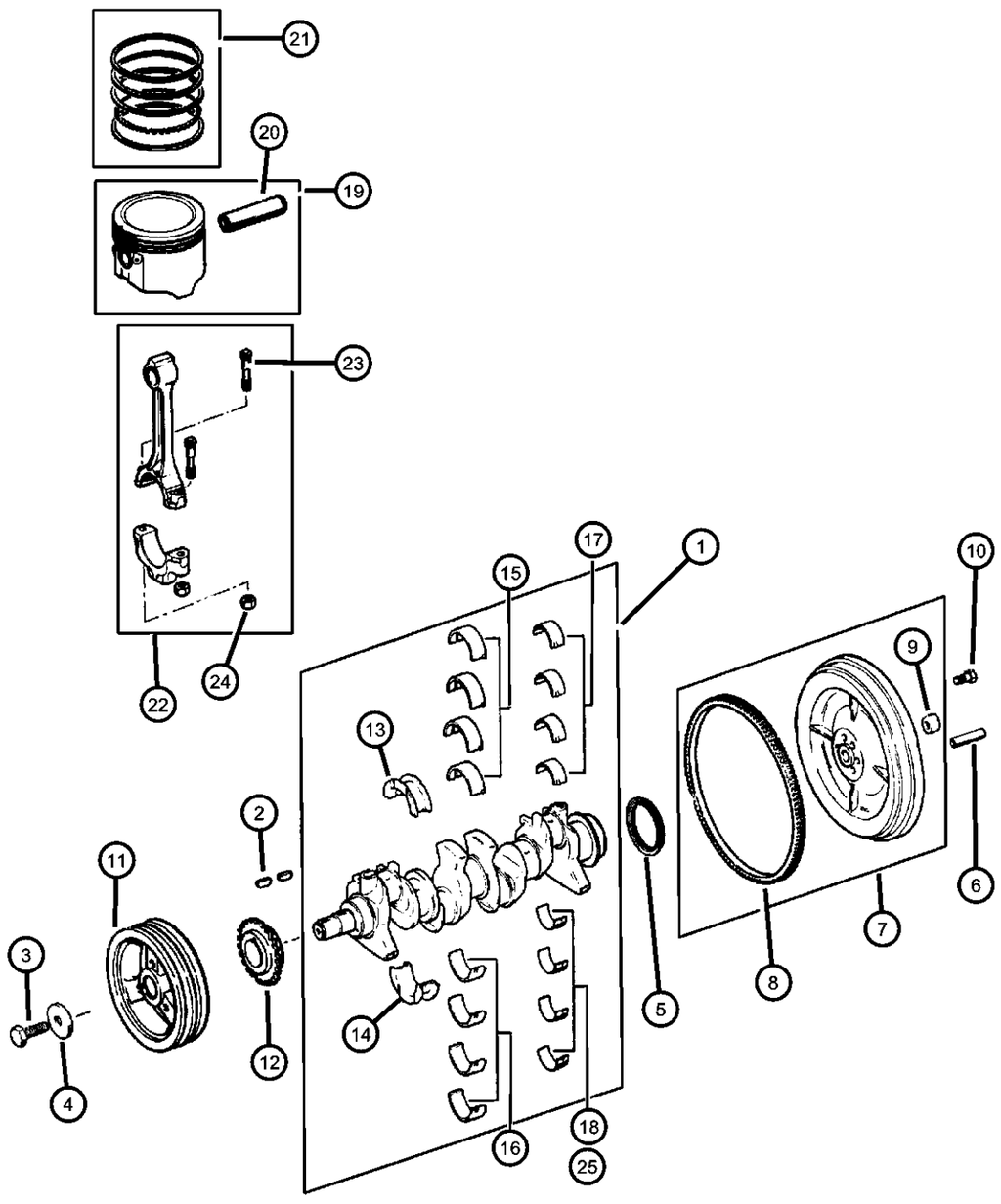

ITEM	PART NUMBER	QTY	LINE	SERIES	BODY	ENGINE	TRANS	TRIM	DESCRIPTION
Note; Sales Codes [DBB]= All Manual Transmissions [EP0]= All 2.5L, 4 Cylinder Gas Engines									
1	04713051AB	1				EP0			CRANKSHAFT
2	06034749	1				EP0			KEY, Crankshaft Sprocket
3	00182776	1				EP0			BOLT
4	J3230155	1				EP0			WASHER, Plain
5	33004143	1				EP0			SEAL, Rear Main Crankshaft
6	06031923	3				EP0	DBB		DOWEL, .250 x 1.05
7	05014273AA	1				EP0	DBB		FLYWHEEL
8	J3241718	1				EP0	DBB		GEAR, Ring
9	53009178AB	1				EP0	DBB		BEARING, Pilot
10	J4007123	6				EP0	DBB		BOLT, Flywheel
11	33002879AB	1				EP0			DAMPER, Crankshaft
12	33004020	1				EP0			GEAR, Crankshaft
13	83507084	1				EP0			BEARING PACKAGE, Crankshaft Thrust, Standard Size
14	83507086	AR				EP0			BEARING PACKAGE, Crankshaft Thrust, .001" Undersize
15	83507079	4				EP0			BEARING PACKAGE, Crankshaft, Standard
16	83507080	AR				EP0			BEARING PACKAGE, Crankshaft, .001 Undersize
17	83500300AB	4				EP0			BEARING KIT, Connecting Rod, Standard
18	83501397AB	AR				EP0			BEARING KIT, Connecting Rod, .001 Undersize
19									PISTON PIN AND ROD
	04798329AC	4				EP0			B Size, 3.8746
	04798330AC	4				EP0			C Size, 3.8752
	04798331AC	4				EP0			D Size, 3.8754
	04798332AC	4				EP0			E Size, 3.8758
	04798333AC	4				EP0			F Size, 3.8762
20	04798333AC	4							PIN, Piston, Serviced in Piston Assembly, (NOT SERVICED),
21	04798324	1				EP0			RING PACKAGE, Piston, Standard Size Complete Engine

DAKOTA (AN)

SERIES	LINE	BODY	ENGINE	TRANSMISSION
L = Dakota (All)	1 = Dakota 2WD 5 = Dakota 4WD	61 = Regular Cab (112 WB) 31 = Club Cab (131 WB) 84 = Quad Cab (131 WB)	EPE = 2.5L 4 Cylinder EHC = 3.9L 6 Cylinder EML = 5.0L 8 Cylinder EVA = 4.7L Magnum V8 EP0 = All 2.5L EH0 = All 3.9L EM0 = All 5.9L EV0 = All 4.7L	DGK = 4 Speed Automatic 42RE DGT = 4 Speed Automatic 46RE DDC = 5 Speed HD Manual DDK = 5 Speed HD Manual DG4 = Multispeed Automatic 45RFE DG0 = All Automatic Transmissions DBB = All Manual Transmissions

AR = use ase required - = Non illustrrated part

Crankshaft, Piston and Torque Converter, 2.5L [EPE]
Figure 2.5L4-410

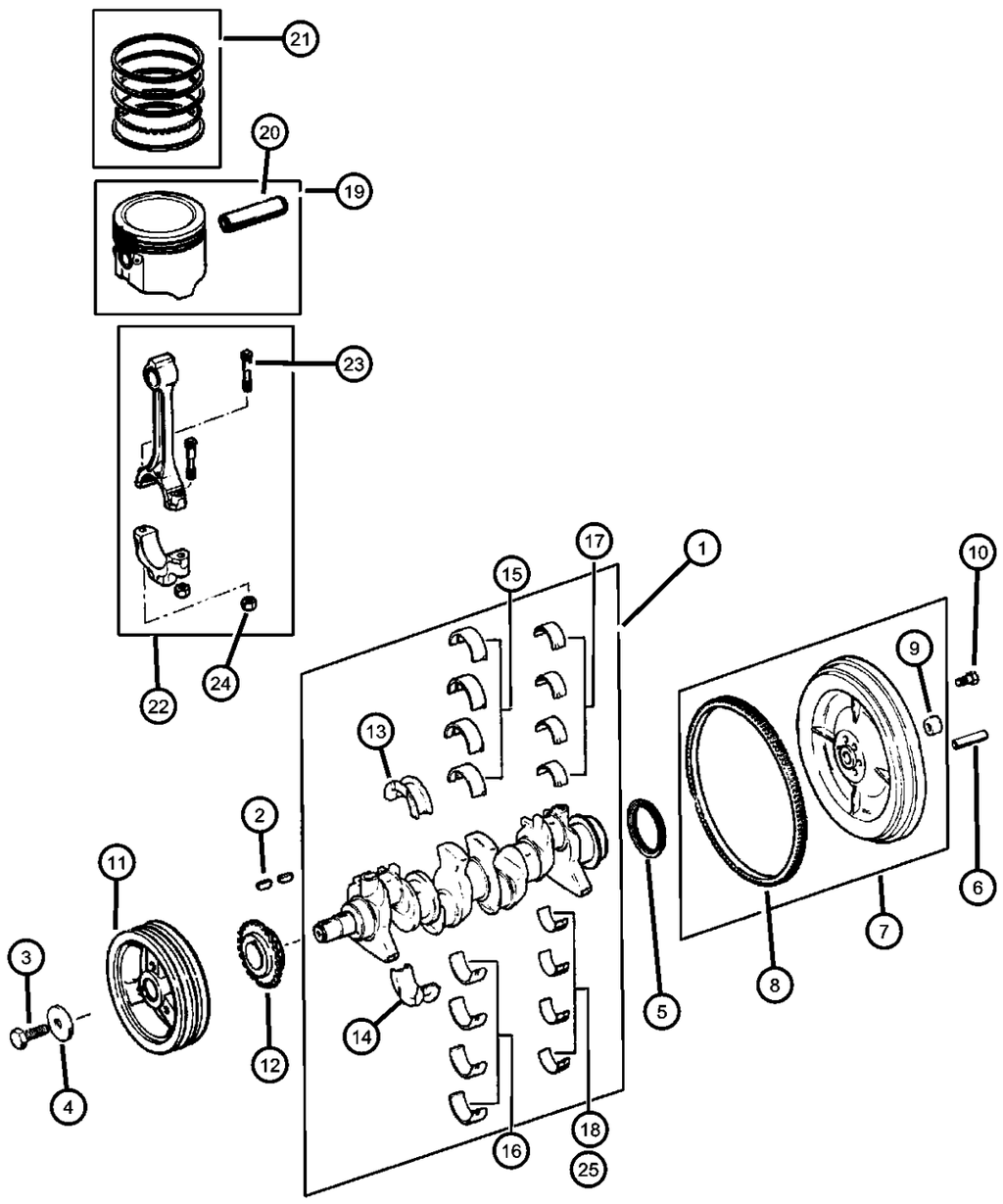

ITEM	PART NUMBER	QTY	LINE	SERIES	BODY	ENGINE	TRANS	TRIM	DESCRIPTION
22	04798324	1							ROD, Connecting, Serviced in Piston Assembly, (NOT SERVICED)
23	53020123	8				EP0			BOLT, Connecting Rod
24	J4006385	8				EP0			NUT, Hex Flange, .3437-24
25	83507081	AR				EP0			BEARING PACKAGE, Crankshaft, .002" U/S

DAKOTA (AN)

SERIES	LINE	BODY	ENGINE	TRANSMISSION
L = Dakota (All)	1 = Dakota 2WD	61 = Regular Cab (112 WB)	EPE = 2.5L 4 Cylinder	DGK = 4 Speed Automatic 42RE
	5 = Dakota 4WD	31 = Club Cab (131 WB)	EHC = 3.9L 6 Cylinder	DGT = 4 Speed Automatic 46RE
		84 = Quad Cab (131 WB)	EML = 5.0L 8 Cylinder	DDC = 5 Speed HD Manual
			EVA = 4.7L Magnum V8	DDK = 5 Speed HD Manual
			EP0 = All 2.5L	DG4 = Multispeed Automatic 45RFE
			EH0 = All 3.9L	DG0 = All Automatic Transmissions
			EM0 = All 5.9L	DBB = All Manual Transmissions
			EV0 = All 4.7L	

AR = use ase required - = Non illustrrated part

Camshaft and Valves, 2.5L [EPE]
Figure 2.5L4-510

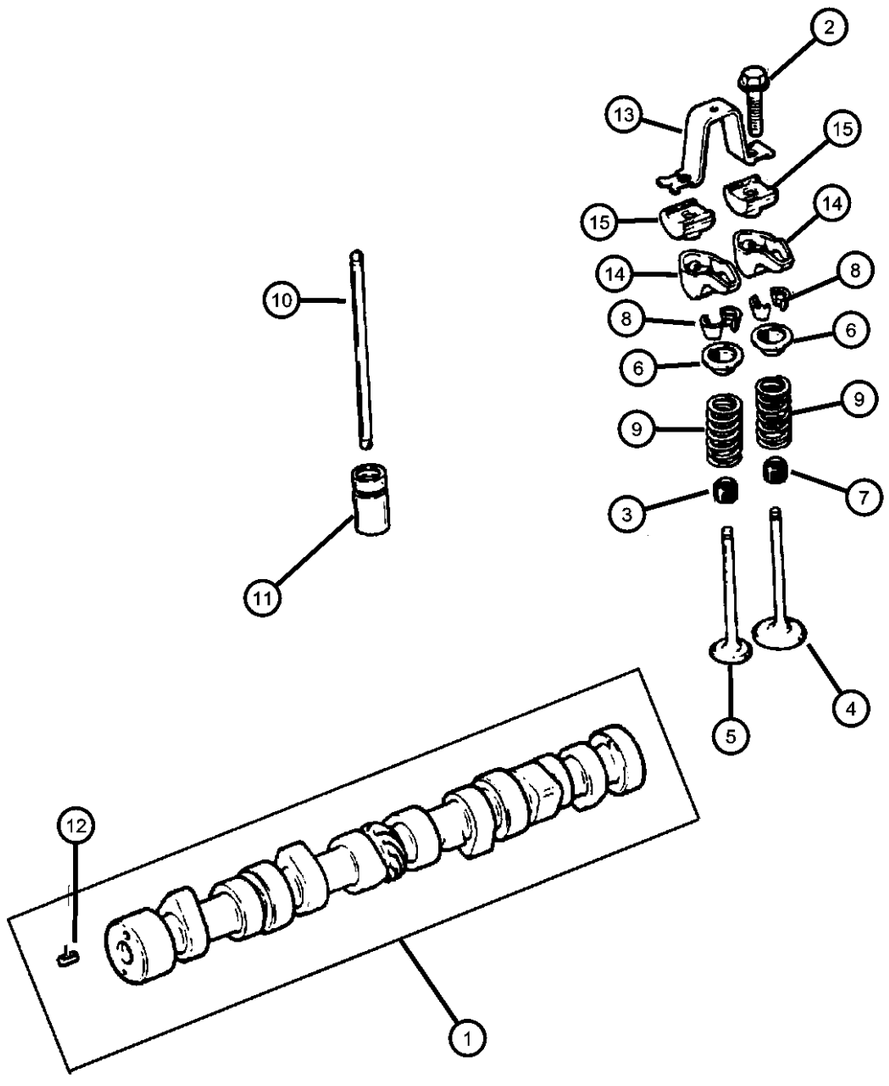

ITEM	PART NUMBER	QTY	LINE	SERIES	BODY	ENGINE	TRANS	TRIM	DESCRIPTION
Note; Sales Codes									
[EP0]= All 2.5L, 4 Cylinder Gas Engines									
1	53020497	1				EP0			CAMSHAFT, Engine
2	J9425708	8				EP0			BOLT, Hex Flange Head, .312-18x1.25
3	53009887	4				EP0			SEAL, Valve GuideExhaust
4	53010512AA	4				EP0			VALVE, Intake, Standard
5	53010513AA	4				EP0			VALVE, Exhaust, Standard
6	53010514AA	8				EP0			RETAINER, Valve Spring
7	53009886	4				EP0			SEAL, Valve GuideIntake
8	53010515AA	16				EP0			LOCK, Valve Spring Retainer
9	53010388	8				EP0			SPRING, Valve
10	J3241709	8				EP0			PUSH ROD, Valve
11	53010574AA	8				EP0			TAPPET, Valve
12	J0456384	1				EP0			DOWEL, Camshaft Sprocket, Also Included In Item#1
13	J3236513	4				EP0			BRIDGE, Rocker Arm
14	J3242393	8				EP0			ROCKER ARM, Valve
15	J3235090	8				EP0			PIVOT, Rocker Arm

DAKOTA (AN)

SERIES	LINE	BODY	ENGINE	TRANSMISSION
L = Dakota (All)	1 = Dakota 2WD	61 = Regular Cab (112 WB)	EPE = 2.5L 4 Cylinder	DGK = 4 Speed Automatic 42RE
	5 = Dakota 4WD	31 = Club Cab (131 WB)	EHC = 3.9L 6 Cylinder	DGT = 4 Speed Automatic 46RE
		84 = Quad Cab (131 WB)	EML = 5.0L 8 Cylinder	DDC = 5 Speed HD Manual
			EVA = 4.7L Magnum V8	DDK = 5 Speed HD Manual
			EP0 = All 2.5L	DG4 = Multispeed Automatic 45RFE
			EH0 = All 3.9L	DG0 = All Automatic Transmissions
			EM0 = All 5.9L	DBB = All Manual Transmissions
			EV0 = All 4.7L	

Timing Belt and Cover, 2.5L [EPE]
Figure 2.5L4-610

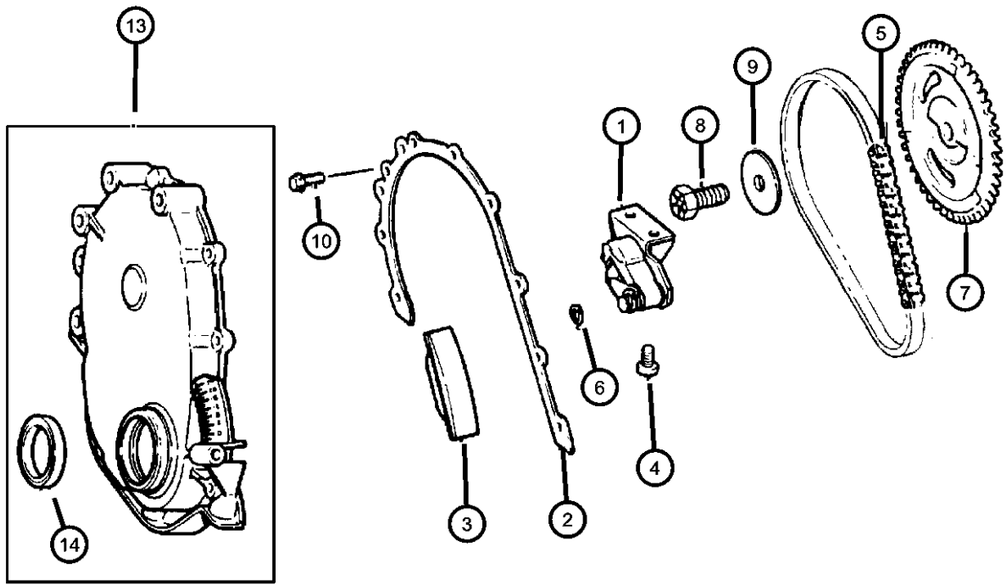

ITEM	PART NUMBER	QTY	LINE	SERIES	BODY	ENGINE	TRANS	TRIM	DESCRIPTION
Note; Sales Codes									
[EP0]= All 2.5L, 4 Cylinder Gas Engines									
1	33003421	1				EP0			TENSIONER, Belt
2	53020487	1				EP0			GASKET, Front Cover
3	33003446	1				EP0			SNUBBER, Timing Chain
4	J4006708	2				EP0			SCREW, Pan Head, .312-18x.56
5	J3242300	1				EP0			CHAIN, Timing
6	J3242300	1							CLIP, Serviced in Tensioner Assembly, (NOT SERVICED)
7	J3242280	1				EP0			GEAR, Camshaft
8	J3243156	1				EP0			BOLT, Hex Flange Head, .50-20x1.38
9	J3173284	1				EP0			WASHER, Flat, .206 Diameter
10	06035893	5				EP0			BOLT, Hex
-11	06035894	2				EP0			SCREW
-12	06035895	1				EP0			SCREW
13	53020222	1				EP0			COVER, Timing Belt
14	33004681	1				EP0			SEAL, Front Main Crankshaft

DAKOTA (AN)

SERIES	LINE	BODY	ENGINE	TRANSMISSION
L = Dakota (All)	1 = Dakota 2WD	61 = Regular Cab (112 WB)	EPE = 2.5L 4 Cylinder	DGK = 4 Speed Automatic 42RE
	5 = Dakota 4WD	31 = Club Cab (131 WB)	EHC = 3.9L 6 Cylinder	DGT = 4 Speed Automatic 46RE
		84 = Quad Cab (131 WB)	EML = 5.0L 8 Cylinder	DDC = 5 Speed HD Manual
			EVA = 4.7L Magnum V8	DDK = 5 Speed HD Manual
			EP0 = All 2.5L	DG4 = Multispeed Automatic 45RFE
			EH0 = All 3.9L	DG0 = All Automatic Transmissions
			EM0 = All 5.9L	DBB = All Manual Transmissions
			EV0 = All 4.7L	

Engine Oiling, 2.5L [EPE]
Figure 2.5L4-710

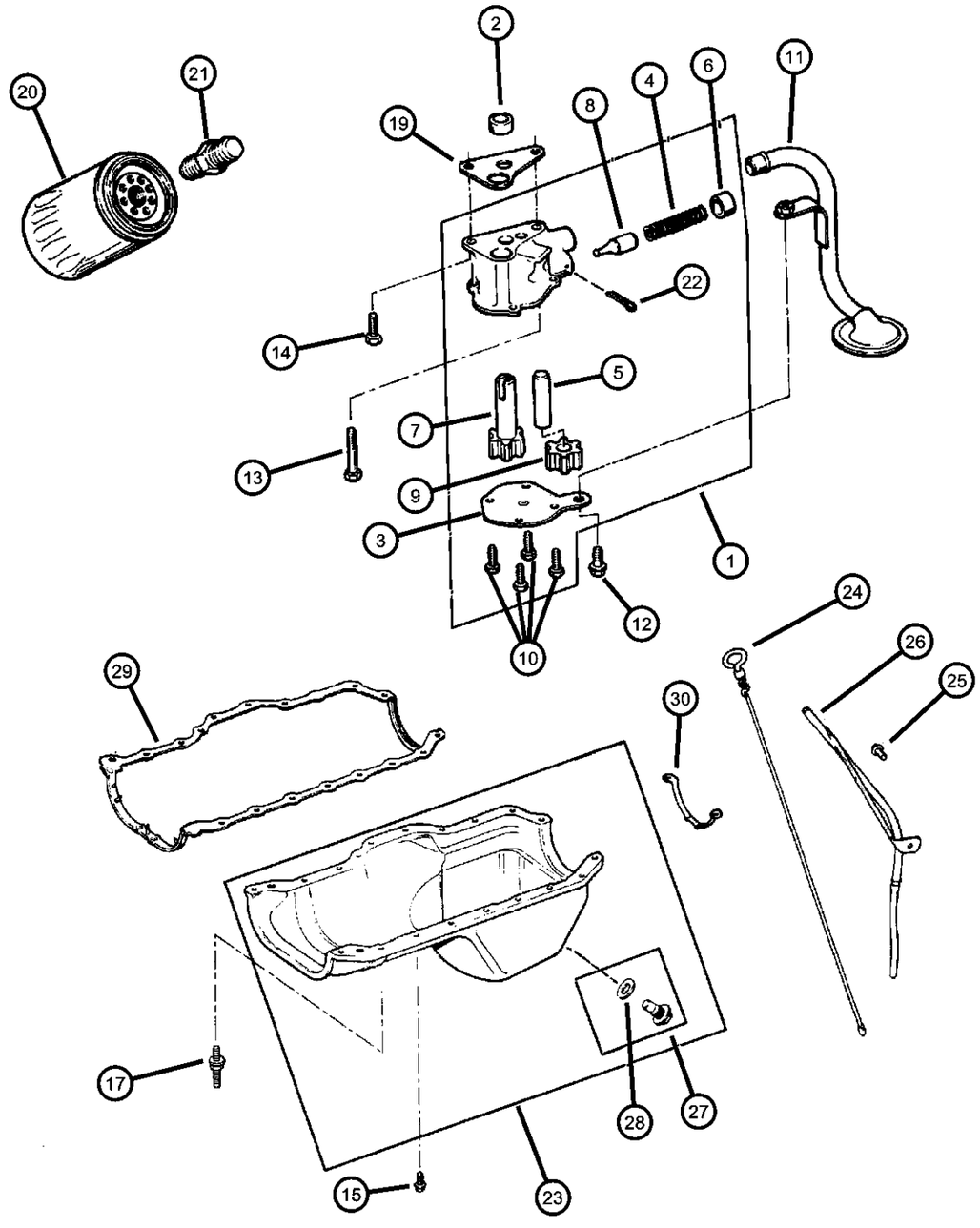

ITEM	PART NUMBER	QTY	LINE	SERIES	BODY	ENGINE	TRANS	TRIM	DESCRIPTION
Note; Sales Codes									
[EP0]= All 2.5L, 4 Cylinder Gas Engines									
1	J3241399	1				EP0			PUMP, Engine Oil
2	J4005149	1				EP0			DOWEL, Oil Pump
3	J3241733	1				EP0			COVER, Engine Oil Pump
4	J3239668	1				EP0			SPRING, Oil Pressure Relief Valve
5	J3171956	1				EP0			SHAFT, Oil Pump
6	J3171958	1				EP0			RETAINER, Oil Release Valve
7	J3172334	1				EP0			GEAR, Oil Pump
8	J3188661	1				EP0			PLUNGER, Oil Pressure Relief Valve
9	J3196843	1				EP0			GEAR, Oil Pump Driven
10	J9416852	4				EP0			SCREW, Hex Flange Head, .25-20x.50
11	53020564	1				EP0			TUBE, Oil Pump Inlet
12	J9419683	1				EP0			BOLT, Hex Flange Head, .312-18x.625
13	00154593	1				EP0			SCREW, Hex Head Coned, .312-18x2.625
14	06022235	1				EP0			BOLT AND WASHER, Hex Head, .312-18x1.00
15	06034732	13				EP0			SCREW AND WASHER, Hex Head, .25-20x.545
-16	06034483	3				EP0			SCREW, Hex Head Coned, .312-18x.875
17	06034734	6				EP0			BOLT, Double Stud Hex, .250-20x1.437 & .250-20 x.700
-18	06034733	1				EP0			STUD, .312-18/.250-20x1.680
19	J3172332	1				EP0			GASKET, Oil Pump
20	05281090	1				EP0			FILTER, Engine Oil
	0FE00292								Canadian Aftermarket Part
	05281090BA								BULK PACK (12)
	77060018								Performance Mobil 1, 15W - 50 Tri-Synthetic Engine Oil- Recommended Fill for 6.1L & 8.3L
21	53007563	1				EP0			CONNECTOR, Oil Filter
22	J0271448	1				EP0			PIN, Roll, 5/32" x 1.00"
23	53020560	1				EP0			PAN, Engine Oil

DAKOTA (AN)

SERIES	LINE	BODY	ENGINE	TRANSMISSION
L = Dakota (All)	1 = Dakota 2WD 5 = Dakota 4WD	61 = Regular Cab (112 WB) 31 = Club Cab (131 WB) 84 = Quad Cab (131 WB)	EPE = 2.5L 4 Cylinder EHC = 3.9L 6 Cylinder EML = 5.0L 8 Cylinder EVA = 4.7L Magnum V8 EP0 = All 2.5L EH0 = All 3.9L EM0 = All 5.9L EV0 = All 4.7L	DGK = 4 Speed Automatic 42RE DGT = 4 Speed Automatic 46RE DDC = 5 Speed HD Manual DDK = 5 Speed HD Manual DG4 = Multispeed Automatic 45RFE DG0 = All Automatic Transmissions DBB = All Manual Transmissions

Engine Oiling, 2.5L [EPE]
Figure 2.5L4-710

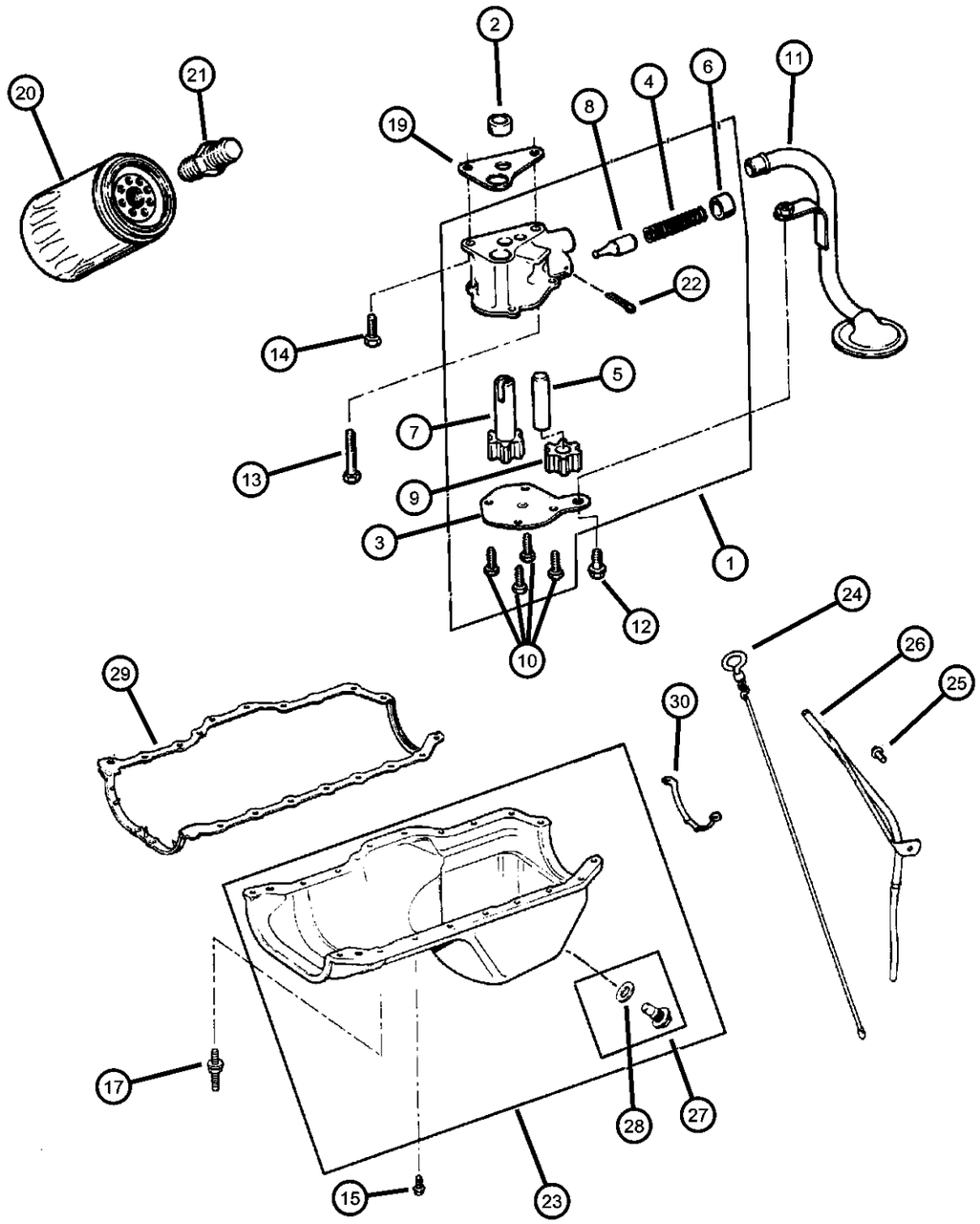

ITEM	PART NUMBER	QTY	LINE	SERIES	BODY	ENGINE	TRANS	TRIM	DESCRIPTION
24	53010444AB	1				EP0			INDICATOR, Engine Oil Level
25	06035664	1				EP0			STUD, .312-18x1.560
26	53010343	1				EP0			TUBE, Oil Filler
27	06035417	1				EP0			PLUG, Oil Drain
28	06035417	1							GASKET, Oil Drain Plug, Serviced in Plug, (NOT SERVICED)
29	53007567	1				EP0			GASKET, Oil Pan
30	J3243116	1				EP0			SUPPORT, Engine Oil Pan

DAKOTA (AN)

SERIES	LINE	BODY	ENGINE	TRANSMISSION
L = Dakota (All)	1 = Dakota 2WD	61 = Regular Cab (112 WB)	EPE = 2.5L 4 Cylinder	DGK = 4 Speed Automatic 42RE
	5 = Dakota 4WD	31 = Club Cab (131 WB)	EHC = 3.9L 6 Cylinder	DGT = 4 Speed Automatic 46RE
		84 = Quad Cab (131 WB)	EML = 5.0L 8 Cylinder	DDC = 5 Speed HD Manual
			EVA = 4.7L Magnum V8	DDK = 5 Speed HD Manual
			EP0 = All 2.5L	DG4 = Multispeed Automatic 45RFE
			EH0 = All 3.9L	DG0 = All Automatic Transmissions
			EM0 = All 5.9L	DBB = All Manual Transmissions
			EV0 = All 4.7L	

Manifold, Intake and Exhaust, 2.5L [EPE]
Figure 2.5L4-810

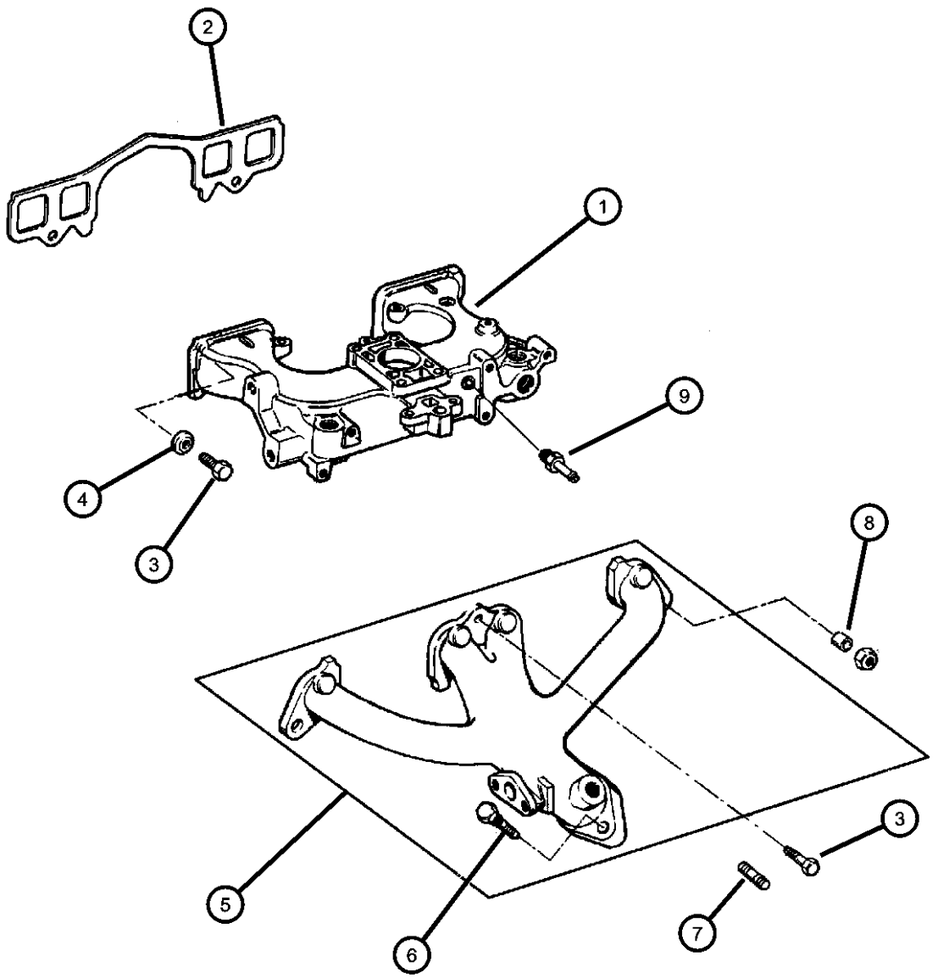

ITEM	PART NUMBER	QTY	LINE	SERIES	BODY	ENGINE	TRANS	TRIM	DESCRIPTION
Note; Sales Codes									
[EP0]= All 2.5L, 4 Cylinder Gas Engines									
1	53010245	1				EP0			MANIFOLD, Intake
2	53020112	1				EP0			GASKET, Intake Manifold
3	06036045AA	4				EP0			BOLT AND RETAINER, Hex Head, Exhaust Manifold Middle
4	06036171AA	2				EP0			NUT AND WASHER
5	53008860	1				EP0			MANIFOLD, Exhaust
6	J4007109	2				EP0			STUD, .375-16x1.69
7	06036193AA	2				EP0			STUD, .375-16/.375-24x1.75, Exhaust Manifold to Head Outboard
8	33003332	2				EP0			SPACER, Exhaust Manifold
9	04854194	1				EP0			FITTING, Vacuum, Crankcase Vent

DAKOTA (AN)

SERIES	LINE	BODY	ENGINE	TRANSMISSION
L = Dakota (All)	1 = Dakota 2WD	61 = Regular Cab (112 WB)	EPE = 2.5L 4 Cylinder	DGK = 4 Speed Automatic 42RE
	5 = Dakota 4WD	31 = Club Cab (131 WB)	EHC = 3.9L 6 Cylinder	DGT = 4 Speed Automatic 46RE
		84 = Quad Cab (131 WB)	EML = 5.0L 8 Cylinder	DDC = 5 Speed HD Manual
			EVA = 4.7L Magnum V8	DDK = 5 Speed HD Manual
			EP0 = All 2.5L	DG4 = Multispeed Automatic 45RFE
			EH0 = All 3.9L	DG0 = All Automatic Transmissions
			EM0 = All 5.9L	DBB = All Manual Transmissions
			EV0 = All 4.7L	

Crankcase Ventilation, 2.5L [EPE]
Figure 2.5L4-910

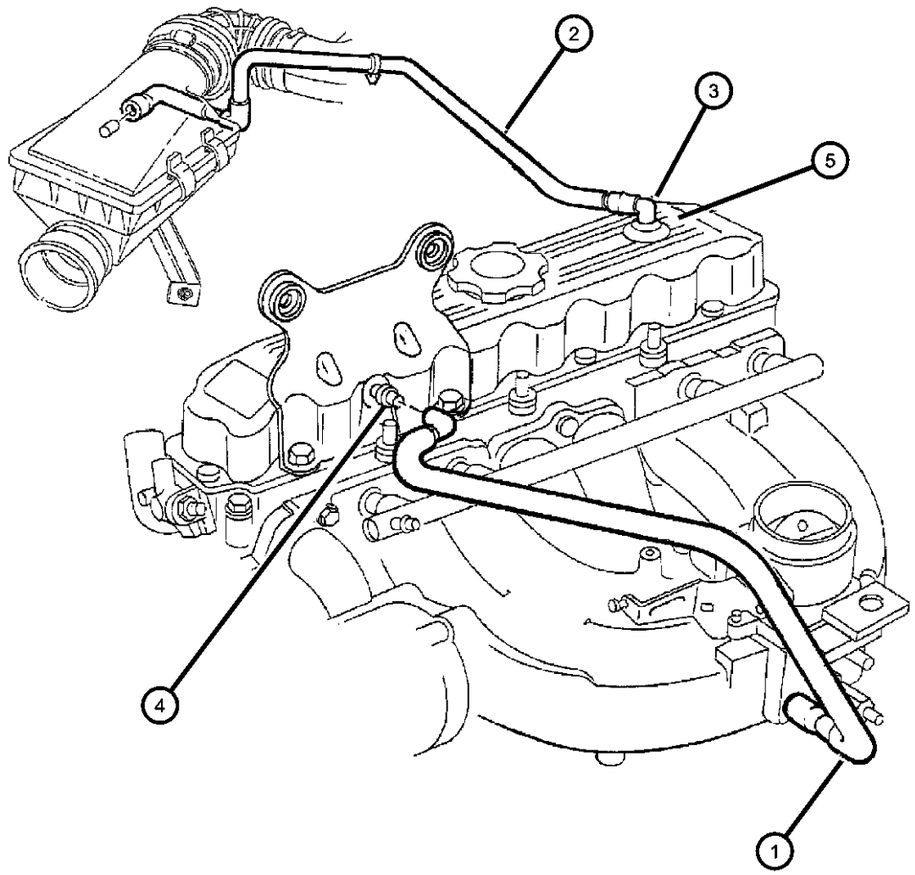

ITEM	PART NUMBER	QTY	LINE	SERIES	BODY	ENGINE	TRANS	TRIM	DESCRIPTION
Note; [EP0]= All 2.5L, 4 Cylinder Gas Engines									
1	04854072	1				EP0			TUBE, Vent
2	53030614	1				EP0			TUBE, Crankcase Vent Valve
3	53030497	1				EP0			FITTING, Crankcase Vent Tube
4	33004175	1				EP0			CONNECTOR, Vacuum Hose
5	02946079	1				EP0			GROMMET, Crankcase Vent

DAKOTA (AN)

SERIES	LINE	BODY	ENGINE	TRANSMISSION
L = Dakota (All)	1 = Dakota 2WD	61 = Regular Cab (112 WB)	EPE = 2.5L 4 Cylinder	DGK = 4 Speed Automatic 42RE
	5 = Dakota 4WD	31 = Club Cab (131 WB)	EHC = 3.9L 6 Cylinder	DGT = 4 Speed Automatic 46RE
		84 = Quad Cab (131 WB)	EML = 5.0L 8 Cylinder	DDC = 5 Speed HD Manual
			EVA = 4.7L Magnum V8	DDK = 5 Speed HD Manual
			EP0 = All 2.5L	DG4 = Multispeed Automatic 45RFE
			EH0 = All 3.9L	DG0 = All Automatic Transmissions
			EM0 = All 5.9L	DBB = All Manual Transmissions
			EV0 = All 4.7L	

Group - 3.9L

Engine 3.9L Six Cylinder

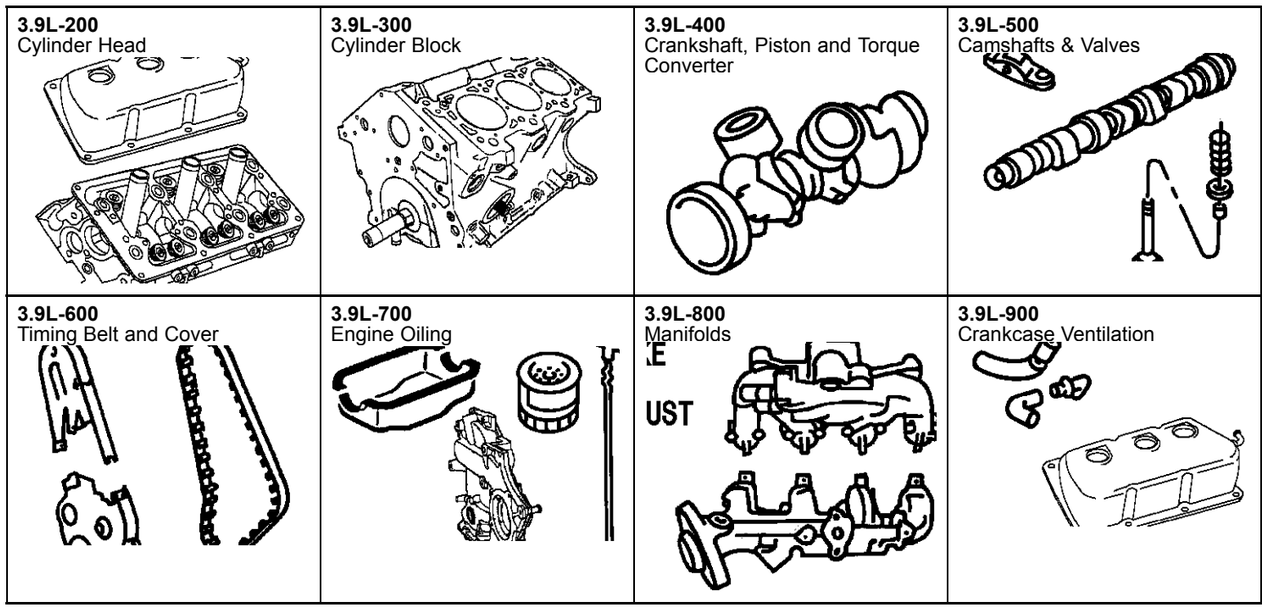

Group - 3.9L Engine 3.9L Six Cylinder

Illustration Title — Group-Fig. No.

Cylinder Head
Cylinder Head, 3.9L [EHC] ..... Fig. 3.9L - 210

Cylinder Block
Cylinder Block, 3.9L [EHC] ..... Fig. 3.9L - 310

Crankshaft, Piston and Torque Converter
Crankshaft, Piston and Torque Converter, 3.9L [EHC] ..... Fig. 3.9L - 410

Camshafts & Valves
Camshaft and Valves, 3.9L [EHC] ..... Fig. 3.9L - 510

Timing Belt and Cover
Timing Belt and Cover, 3.9L [EHC] ..... Fig. 3.9L - 610

Engine Oiling
Engine Oiling, 3.9L [EHC] ..... Fig. 3.9L - 710

Manifolds
Manifold, Intake and Exhaust, 3.9L [EHC] ..... Fig. 3.9L - 810
Manifold, Heat Shields, 3.9L [EHC] ..... Fig. 3.9L - 820

Crankcase Ventilation
Crankcase Ventilation, 3.9L [EHC] ..... Fig. 3.9L - 910

Cylinder Head, 3.9L [EHC]
Figure 3.9L-210

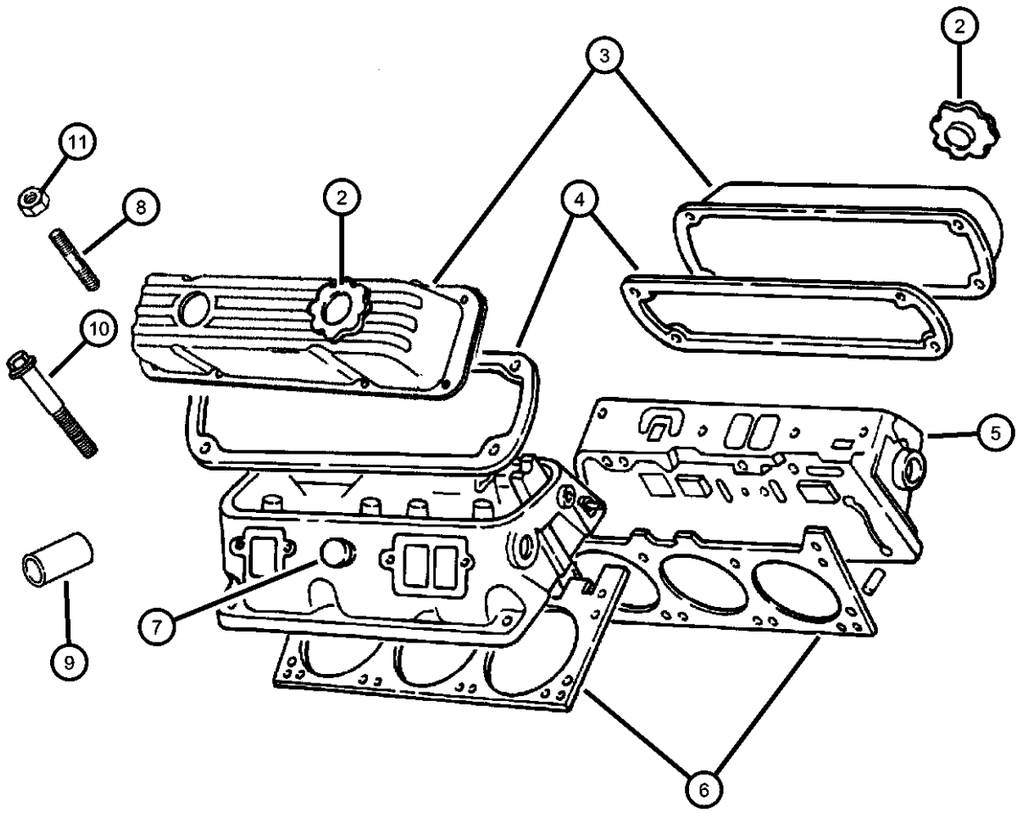

ITEM	PART NUMBER	QTY	LINE	SERIES	BODY	ENGINE	TRANS	TRIM	DESCRIPTION
Note; Sales Codes [EH0]= All 3.9L V-6 Gas Engines [EM0]= All 5.9L V-8 Gas Engines									
-1	04897384AC	1				EH0			GASKET PACKAGE, Engine
2	04648831AA	1				EH0, EM0			CAP, Oil Filler
3									COVER, Cylinder Head
	53020336	1				EH0			With Oil Fill Hole
	53020609	1				EH0			Without Oil Fill Hole
4	53006699	2				EH0			GASKET, Valve Cover
5	53021135	2				EH0			HEAD, Cylinder
6	53020489	2				EH0			GASKET, Cylinder Head
7	04556020	4				EH0			PLUG, Core, 1.25 Diameter
8	06035878AA	12				EH0			STUD
9	53020419	6				EH0			SHIELD, Heat
10									BOLT, Cylinder Head
	06034690	8				EH0			.50-13x2.00
	06034691	8				EH0			.50-13x4.50
11	06034691	8							NUT, .25x20, (NOT SERVICED),

DAKOTA (AN)

SERIES	LINE	BODY	ENGINE	TRANSMISSION
L = Dakota (All)	1 = Dakota 2WD	61 = Regular Cab (112 WB)	EPE = 2.5L 4 Cylinder	DGK = 4 Speed Automatic 42RE
	5 = Dakota 4WD	31 = Club Cab (131 WB)	EHC = 3.9L 6 Cylinder	DGT = 4 Speed Automatic 46RE
		84 = Quad Cab (131 WB)	EML = 5.0L 8 Cylinder	DDC = 5 Speed HD Manual
			EVA = 4.7L Magnum V8	DDK = 5 Speed HD Manual
			EP0 = All 2.5L	DG4 = Multispeed Automatic 45RFE
			EH0 = All 3.9L	DG0 = All Automatic Transmissions
			EM0 = All 5.9L	DBB = All Manual Transmissions
			EV0 = All 4.7L	

Cylinder Block, 3.9L [EHC]
Figure 3.9L-310

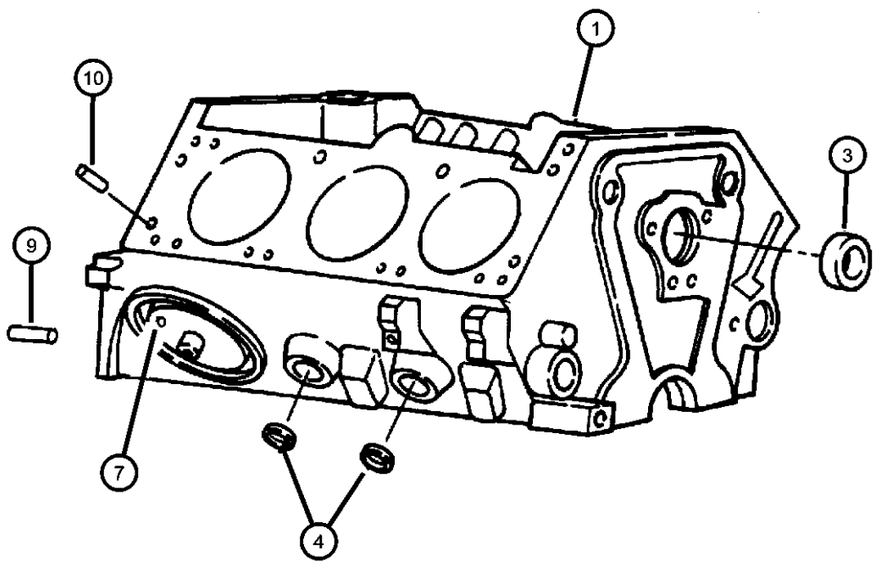

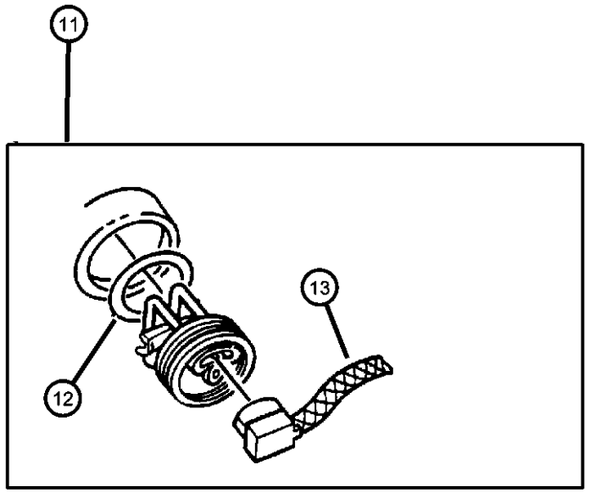

ITEM	PART NUMBER	QTY	LINE	SERIES	BODY	ENGINE	TRANS	TRIM	DESCRIPTION
Note; Sales Codes [EH0]= All 3.9L V-6 Gas Engines [EM0]= All 5.9L V-8 Gas Engines [EV0]= All 4.7L Gas Engines									
1	04713599AB	1				EH0			BLOCK, Short, Contains: Crank, Rods, Pistons, Rings, Cam Bearings
-2	04720651AB	1				EH0			GASKET PACKAGE, EngineLower
3	03830603	1				EH0			BEARING, Camshaft, #1
4	04556020	1				EH0			PLUG, Core, 1.25 Diameter
-5	04556022	7				EH0			PLUG, Core, 1.625 Diameter
-6	04556023	AR				EH0, EM0			PLUG, Core, 1.695 Diameter
7	03751818	2				EH0			PLUG, Pipe
-8	53009518	1				EH0			PLUG, Cylinder Block Oil Hole
9	01122532	2				EH0			DOWEL, Block To Clutch Housing
10	00141215	4				EH0			DOWEL, .312 x .500
11	04798276AC	1				EH0, EM0			HEATER PACKAGE, Engine Block
12	06501445	AR				EH0, EM0, EV0			O RING, Engine Block Heater
13	56020234	1				EH0, EM0, EV0			CORD, Engine Block Heater

DAKOTA (AN)

SERIES	LINE	BODY	ENGINE	TRANSMISSION
L = Dakota (All)	1 = Dakota 2WD 5 = Dakota 4WD	61 = Regular Cab (112 WB) 31 = Club Cab (131 WB) 84 = Quad Cab (131 WB)	EPE = 2.5L 4 Cylinder EHC = 3.9L 6 Cylinder EML = 5.0L 8 Cylinder EVA = 4.7L Magnum V8 EP0 = All 2.5L EH0 = All 3.9L EM0 = All 5.9L EV0 = All 4.7L	DGK = 4 Speed Automatic 42RE DGT = 4 Speed Automatic 46RE DDC = 5 Speed HD Manual DDK = 5 Speed HD Manual DG4 = Multispeed Automatic 45RFE DG0 = All Automatic Transmissions DBB = All Manual Transmissions

AR = use ase required - = Non illustrrated part

Crankshaft, Piston and Torque Converter, 3.9L [EHC]
Figure 3.9L-410

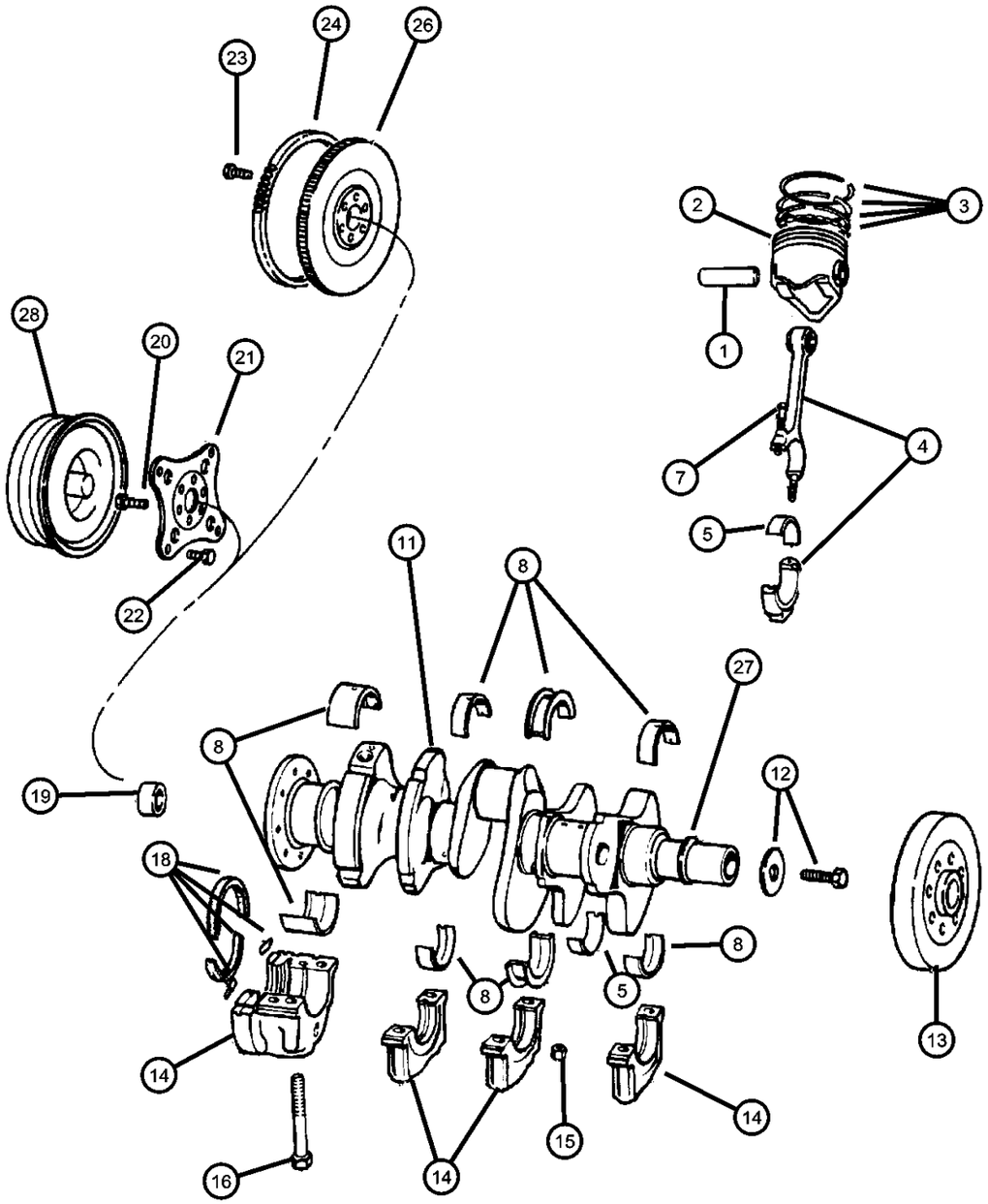

ITEM	PART NUMBER	QTY	LINE	SERIES	BODY	ENGINE	TRANS	TRIM	DESCRIPTION
Note; Sales Codes [DBB]= All Manual Transmissions [DG4]= Multi Speed Automatic Transmission 45RFE [DG0]= All Automatic Transmissions [EH0]= All 3.9L V-6 Gas Engines [EM0]= All 5.9L V-8 Gas Engines									
1	53005779	3				EH0			PIN, Piston, Also Serviced In Item 2
2									PISTON PIN AND ROD
	04778861AB	3				EH0			#1,3,5, B Size, 3.90925
	04778862AB	3				EH0			#2,4,6, B Size, 3.90925
	04778863AB	3				EH0			#1,3,5, C Size, 3.90975
	04778864AB	3				EH0			#2,4,6, C Size, 3.90975
	04778865AB	3				EH0			#1,3,5, D Size, 3.91025
	04778866AB	3				EH0			#2,4,6, D SIze, 3.91025
3	04720653	1				EH0			RING PACKAGE, Piston, Standard Size Complete Engine
4	04720653	1							ROD, Connecting, Also Serviced In Item 2, (NOT SERVICED)
5									BEARING, Connecting Rod, STD.
	04397658	3				EH0			#1,3,5
		3				EH0			#2,4,6
-6	04397659	AR				EH0			BEARING, Connecting Rod, .001" U/S
7									BOLT, Connecting Rod
	06033441	6				EH0			#2,4,6
		6				EH0			#1,3,5
8									BEARING PACKAGE, Crankshaft, Standard Size
	04397701	1				EH0			#4
	04397778	4				EH0			#1,3
-9	04720595AC	1				EH0			BEARING KIT, Crankshaft, Standard
-10	04397702	AR				EH0			BEARING PACKAGE, Crankshaft, .001 Undersize, #4
11	53020601	1				EH0			CRANKSHAFT
12	06036207AA	1				EH0, EM0			BOLT, Hex Head
13	53020229	1				EH0			DAMPER, Crankshaft

DAKOTA (AN)

SERIES	LINE	BODY	ENGINE	TRANSMISSION
L = Dakota (All)	1 = Dakota 2WD 5 = Dakota 4WD	61 = Regular Cab (112 WB) 31 = Club Cab (131 WB) 84 = Quad Cab (131 WB)	EPE = 2.5L 4 Cylinder EHC = 3.9L 6 Cylinder EML = 5.0L 8 Cylinder EVA = 4.7L Magnum V8 EP0 = All 2.5L EH0 = All 3.9L EM0 = All 5.9L EV0 = All 4.7L	DGK = 4 Speed Automatic 42RE DGT = 4 Speed Automatic 46RE DDC = 5 Speed HD Manual DDK = 5 Speed HD Manual DG4 = Multispeed Automatic 45RFE DG0 = All Automatic Transmissions DBB = All Manual Transmissions

AR = use ase required - = Non illustrrated part

Crankshaft, Piston and Torque Converter, 3.9L [EHC]
Figure 3.9L-410

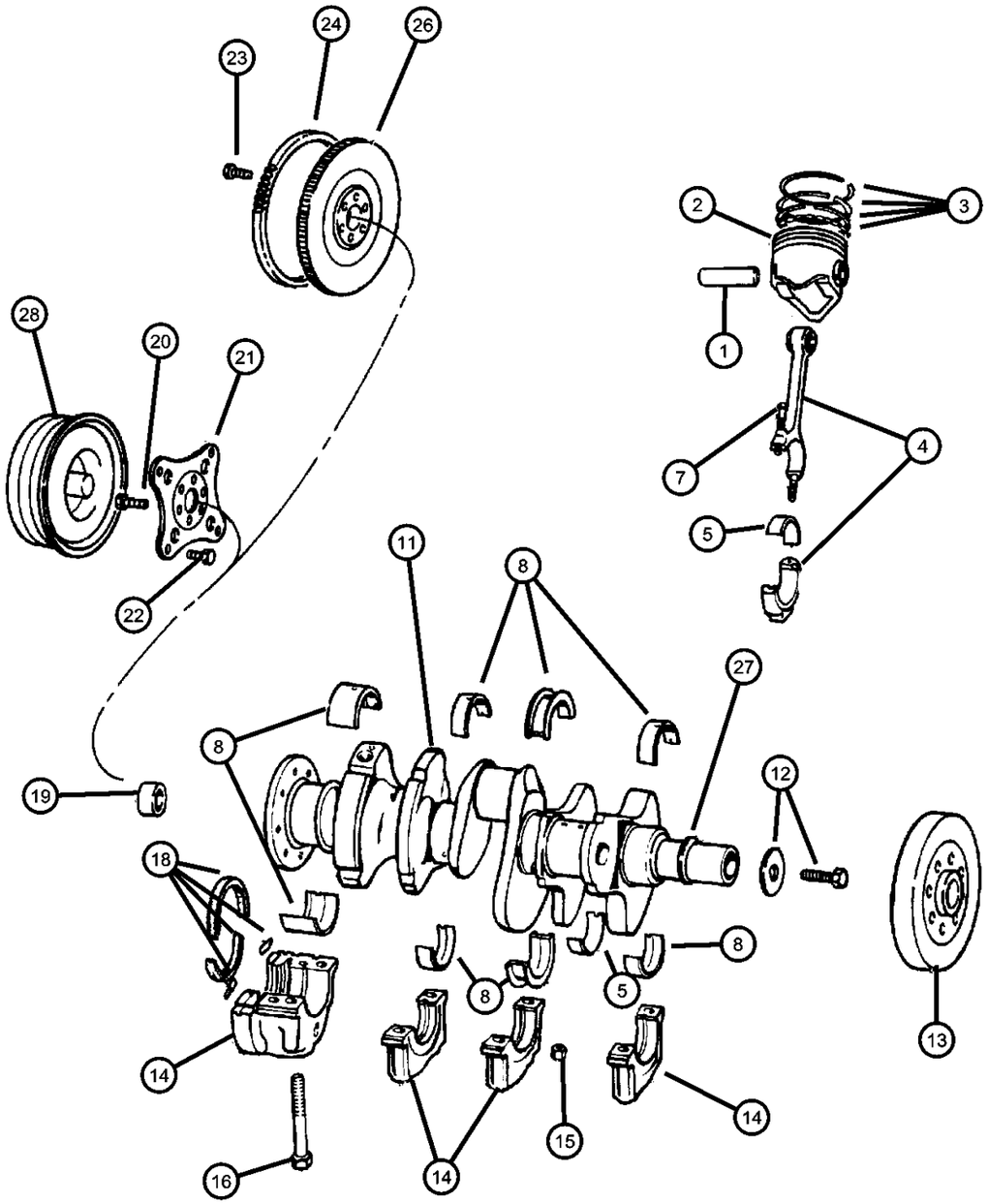

ITEM	PART NUMBER	QTY	LINE	SERIES	BODY	ENGINE	TRANS	TRIM	DESCRIPTION
14	53020229	1							CAP, Serviced in Block, (NOT SERVICED)
15									NUT, Hex, .375-24
	06036297AA	6				EH0			#2,4,6
		6				EH0			#1,3,5
16	06027264	6				EH0			SCREW, Socket Hex Head, .50-13x3.25, #1,2,3
-17	06033300	2				EH0			SCREW, Cap, .50-13x2.80, #4
18	04778228	1				EH0			SEAL PACKAGE, Crankshaft
19	53009180AB	1				EH0	DBB		BEARING, Pilot
20	06035462	6				EH0, EM0	DG0		BOLT, Flexplate
21	52118256	1				EH0	DG0		PLATE, Torque Converter Drive
22	01949765	4					DG0		SCREW, Hex Head Header Point, .312-24x.44
23	06036143AA	6				EH0	DBB		SCREW
24	02843214	1				EH0	DBB		GEAR, Flywheel Ring
-25	02121196	1				EH0	DG0		GEAR, Ring
26	53021628AA	1				EH0	DBB		FLYWHEEL
27	53021628AA	1							WASHER, Sealing, (NOT SERVICED)
28	04736593AB	1				EH0	DG0		CONVERTER PACKAGE, Torque

DAKOTA (AN)

SERIES	LINE	BODY	ENGINE	TRANSMISSION
L = Dakota (All)	1 = Dakota 2WD	61 = Regular Cab (112 WB)	EPE = 2.5L 4 Cylinder	DGK = 4 Speed Automatic 42RE
	5 = Dakota 4WD	31 = Club Cab (131 WB)	EHC = 3.9L 6 Cylinder	DGT = 4 Speed Automatic 46RE
		84 = Quad Cab (131 WB)	EML = 5.0L 8 Cylinder	DDC = 5 Speed HD Manual
			EVA = 4.7L Magnum V8	DDK = 5 Speed HD Manual
			EP0 = All 2.5L	DG4 = Multispeed Automatic 45RFE
			EH0 = All 3.9L	DG0 = All Automatic Transmissions
			EM0 = All 5.9L	DBB = All Manual Transmissions
			EV0 = All 4.7L	

AR = use ase required - = Non illustrrated part

Camshaft and Valves, 3.9L [EHC]
Figure 3.9L-510

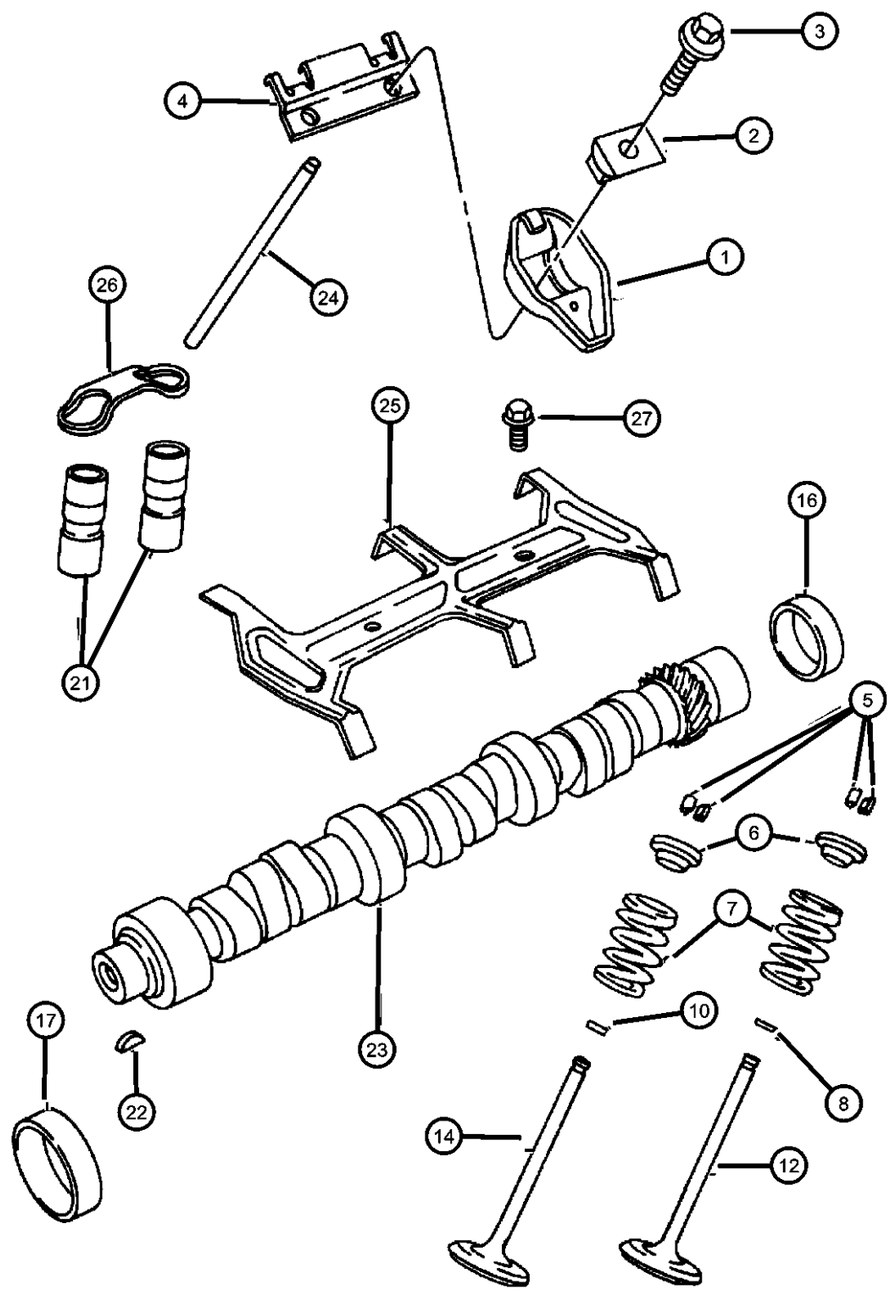

ITEM	PART NUMBER	QTY	LINE	SERIES	BODY	ENGINE	TRANS	TRIM	DESCRIPTION
Note; Sales Codes [EH0]= All 3.9L V-6 Gas Engines									
1	53008282	12				EH0			ROCKER ARM, Valve
2	53008283	12				EH0			PIVOT, Rocker Arm
3	06036154AA	12				EH0			BOLT, Hex Flange Head, .312-18x1.72
4	53008633	6				EH0			RETAINER, Rocker Arm Pivot
5	33003521	24				EH0			LOCK, Valve Spring Retainer
6	33004626	12				EH0			RETAINER, Valve Spring
7	53021056	12				EH0			SPRING, Valve
8	53009886	6				EH0			SEAL, Valve GuideIntake
-9	33003016	AR				EH0			SEAL, Valve Guide, .015" OversizeIntake
10	53009887	6				EH0			SEAL, Valve GuideExhaust
-11	33002733	AR				EH0			SEAL, Valve Guide, .015" OversizeExhaust
12	53006723	6				EH0			VALVE, Intake, Standard
-13	53009285	AR				EH0			VALVE, Intake, .015" O/S
14	53006724	6				EH0			VALVE, Exhaust, Standard
-15	53009291	AR				EH0			VALVE, Exhaust, .003" O/S
16	02863071	1				EH0			PLUG, Camshaft
17	03830603	1				EH0			BEARING, Camshaft, #1
-18	04179776	1				EH0			BEARING, Camshaft, #2
-19	04179778	1				EH0			BEARING, Camshaft, #3 or #4
-20	01632526	1				EH0			BEARING, Camshaft, #4 or #5
21	04713439	12				EH0			TAPPET PACKAGE, Valve
22	00431787	1				EH0			KEY, Camshaft Sprocket
23	53020282	1				EH0			CAMSHAFT, Engine
24	53006722	12				EH0			PUSH ROD, Valve
25	04387226	1				EH0			RETAINER, Tappet Yoke Aligning
26	04483045	6				EH0			YOKE, Tappet Aligning
27	01947953	2				EH0			SCREW AND WASHER, Hex Head

DAKOTA (AN)

SERIES	LINE	BODY	ENGINE	TRANSMISSION
L = Dakota (All)	1 = Dakota 2WD 5 = Dakota 4WD	61 = Regular Cab (112 WB) 31 = Club Cab (131 WB) 84 = Quad Cab (131 WB)	EPE = 2.5L 4 Cylinder EHC = 3.9L 6 Cylinder EML = 5.0L 8 Cylinder EVA = 4.7L Magnum V8 EP0 = All 2.5L EH0 = All 3.9L EM0 = All 5.9L EV0 = All 4.7L	DGK = 4 Speed Automatic 42RE DGT = 4 Speed Automatic 46RE DDC = 5 Speed HD Manual DDK = 5 Speed HD Manual DG4 = Multispeed Automatic 45RFE DG0 = All Automatic Transmissions DBB = All Manual Transmissions

AR = use ase required - = Non illustrrated part

Timing Belt and Cover, 3.9L [EHC]
Figure 3.9L-610

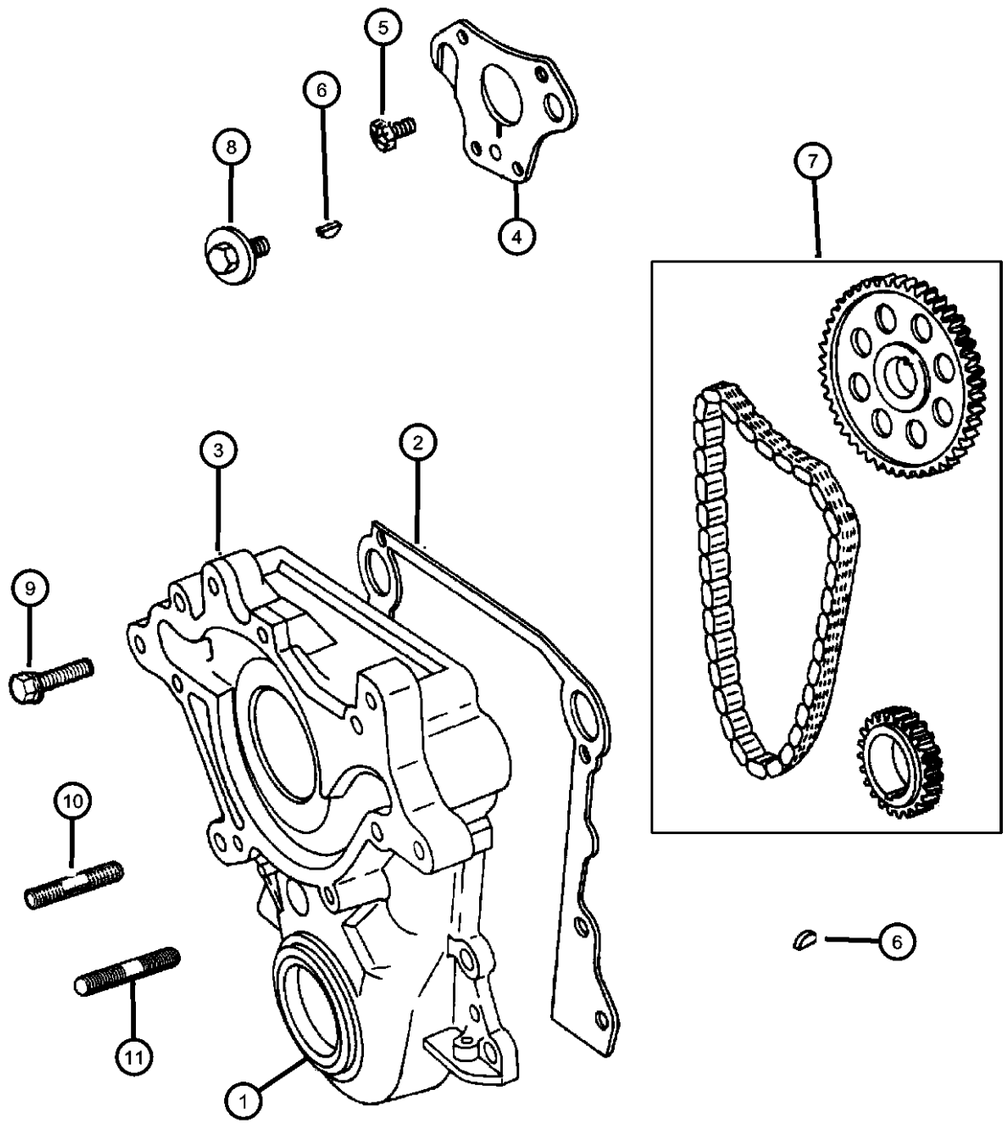

ITEM	PART NUMBER	QTY	LINE	SERIES	BODY	ENGINE	TRANS	TRIM	DESCRIPTION
Note; Sales Codes [EH0]= All 3.9L V-6 Gas Engines [EM0]= All 5.9L V-8 Gas Engines									
1	04897297AA	1				EH0			SEAL PACKAGE, Timing Case Cover
2	53021057	1				EH0			GASKET, Chain Case Cover
3	04897723AA	1				EH0			COVER PACKAGE, Engine Timing
4	53021195AA	1				EH0			TENSIONER, Chain
5	01947953	3				EH0, EM0			SCREW AND WASHER, Hex Head
6	06029411	1				EH0			KEY, Crankshaft Sprocket
7	83507095	1				EH0, EM0			CHAIN PACKAGE, Timing
8	06034321	1				EH0, EM0			SCREW AND WASHER, Hex Head, Coned, Header, .437-14x1.375
9	06034479	1				EH0, EM0			BOLT, Hex Head, .375-16x2.25
10	06034452	1				EH0, EM0			STUD, .375-16x.375-16x2.38
11	06034453	2				EH0, EM0			STUD, .375-16x.375-16x1.63

DAKOTA (AN)

SERIES	LINE	BODY	ENGINE	TRANSMISSION
L = Dakota (All)	1 = Dakota 2WD	61 = Regular Cab (112 WB)	EPE = 2.5L 4 Cylinder	DGK = 4 Speed Automatic 42RE
	5 = Dakota 4WD	31 = Club Cab (131 WB)	EHC = 3.9L 6 Cylinder	DGT = 4 Speed Automatic 46RE
		84 = Quad Cab (131 WB)	EML = 5.0L 8 Cylinder	DDC = 5 Speed HD Manual
			EVA = 4.7L Magnum V8	DDK = 5 Speed HD Manual
			EP0 = All 2.5L	DG4 = Multispeed Automatic 45RFE
			EH0 = All 3.9L	DG0 = All Automatic Transmissions
			EM0 = All 5.9L	DBB = All Manual Transmissions
			EV0 = All 4.7L	

Engine Oiling, 3.9L [EHC]
Figure 3.9L-710

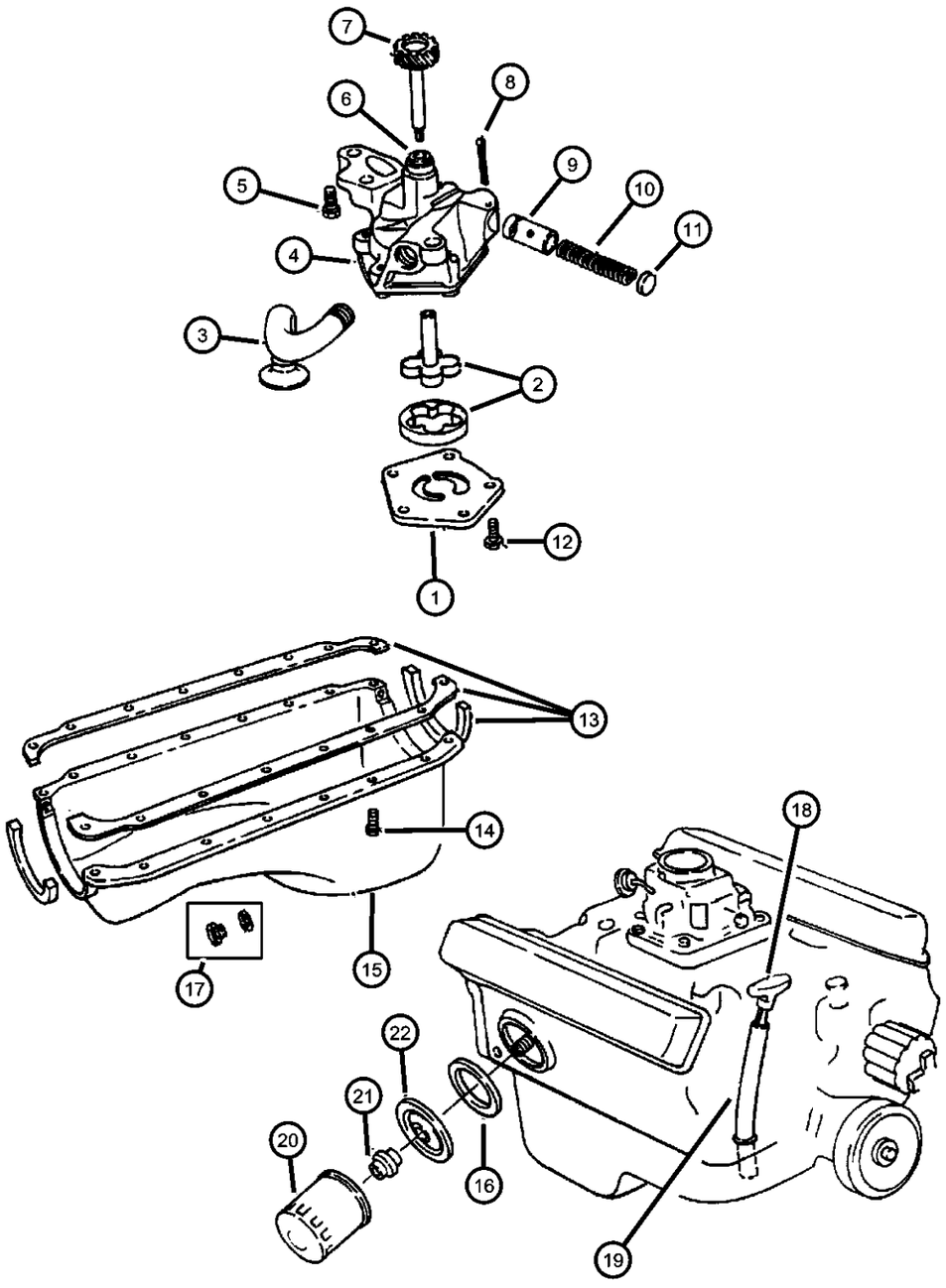

ITEM	PART NUMBER	QTY	LINE	SERIES	BODY	ENGINE	TRANS	TRIM	DESCRIPTION
Note; Sales Codes [EH0]= All 3.9L V-6 Gas Engines [EM0]= All 5.9L V-8 Gas Engines									
1	04071043	1				EH0			COVER, Engine Oil Pump
2	03837648	1				EH0			SHAFT AND ROTOR PACKAGE, Oil Pump
3	04315436	1				EH0			PICKUP, Engine Oil
4	53009295	1				EH0			PUMP, Engine Oil
5	00179842	2				EH0, EM0			SCREW, Hex Head Header Point, .375-16x1.375
6	01737725	1				EH0			BUSHING, Oil Pump and Distibutor
7	53020546	1				EH0, EM0			SHAFT, Oil Pump
8	00108636	1				EH0			PIN, Cotter
9	02843208	1				EH0			PLUNGER, Oil Pressure Relief Valve
10	02402473	1				EH0			SPRING, Oil Pressure Relief Valve
11	02806273	1				EH0			CAP, Oil Pressure Relief Valve
12	00220480	5				EH0			SCREW, Hex Head Header Point, .25-20x.75
13	53005646	1				EH0			GASKET, Oil Pan
14	06034549	14				EH0			SCREW, Hex Head, .312-18x.94
15	53020911	1				EH0			PAN, Engine Oil
16	53020461AB	1				EH0, EM0			GASKET, Oil Filter Adapter
17	06035417	1				EH0			PLUG, Oil Drain
18	53020924	1				EH0			INDICATOR, Engine Oil Level
19	53020926	1				EH0, EM0			TUBE, Oil Gauge
20	05281090	1				EH0, EM0			FILTER, Engine Oil
	0FE00292								Canadian Aftermarket Part
	05281090BA								BULK PACK (12)
	77060018								Performance Mobil 1, 15W - 50 Tri-Synthetic Engine Oil- Recommended Fill for 6.1L & 8.3L
21	53007563	1				EH0, EM0			CONNECTOR, Oil Filter
22	53021053	1				EH0, EM0			PLATE, Oil Filter Adapter

DAKOTA (AN)

SERIES	LINE	BODY	ENGINE	TRANSMISSION
L = Dakota (All)	1 = Dakota 2WD 5 = Dakota 4WD	61 = Regular Cab (112 WB) 31 = Club Cab (131 WB) 84 = Quad Cab (131 WB)	EPE = 2.5L 4 Cylinder EHC = 3.9L 6 Cylinder EML = 5.0L 8 Cylinder EVA = 4.7L Magnum V8 EP0 = All 2.5L EH0 = All 3.9L EM0 = All 5.9L EV0 = All 4.7L	DGK = 4 Speed Automatic 42RE DGT = 4 Speed Automatic 46RE DDC = 5 Speed HD Manual DDK = 5 Speed HD Manual DG4 = Multispeed Automatic 45RFE DG0 = All Automatic Transmissions DBB = All Manual Transmissions

Manifold, Intake and Exhaust, 3.9L [EHC]
Figure 3.9L-810

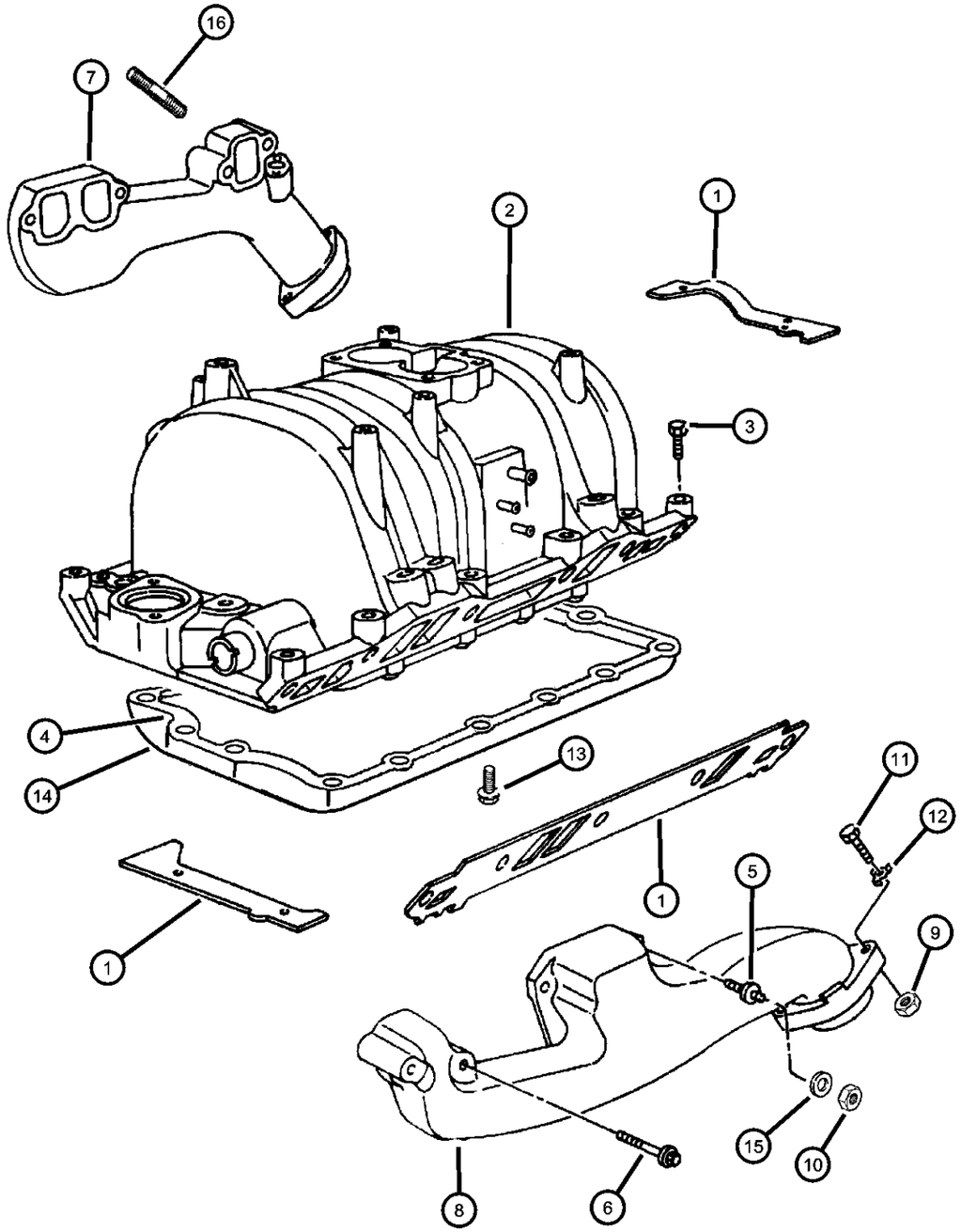

ITEM	PART NUMBER	QTY	LINE	SERIES	BODY	ENGINE	TRANS	TRIM	DESCRIPTION
Note; Sales Codes [EH0]= All 3.9L V-6 Gas Engines [EM0]= All 5.9L V-8 Gas Engines [EV0]= All 4.7L Gas Engines									
1	04897382AC	1				EH0			GASKET PACKAGE, Intake Manifold
2	05139846AA	1				EH0			MANIFOLD, Intake
3	06035967AA	12				EH0, EM0			SCREW AND WASHER, Hex Head
4	05017207AA	1				EH0			GASKET, Intake Manifold Pan
5	06035184	1				EH0			STUD, .312-18/.312-24x4.125
6	06034806	3				EH0			SCREW AND WASHER, Hex Head, .312-18x3.125
7	53030872AB	1				EH0			MANIFOLD, ExhaustRight
8	53010185AB	1				EH0			MANIFOLD, ExhaustLeft
9	06025011	4				EH0, EM0, EV0			NUT AND WASHER, Hex Nut-Coned Washer, .375-16
10	00115729	4				EH0			NUT, Hex, .312 x 24
11	06035375	4				EH0, EM0, EV0			BOLT, Hex Head, .375-16x2.50
12	04004001	4				EH0, EM0, EV0			RETAINER, Exhaust Pipe to Manifold
13	06034583	14				EH0			SCREW AND WASHER, Hex Head, .25-20x.892
14	53006600	1				EH0			PAN, Intake Manifold
15	53010091	4				EH0, EM0			CLAMP, Exhaust Manifold
16	06034643	4				EH0, EM0			STUD, .312-18/.312-24x2.25

DAKOTA (AN)

SERIES	LINE	BODY	ENGINE	TRANSMISSION
L = Dakota (All)	1 = Dakota 2WD 5 = Dakota 4WD	61 = Regular Cab (112 WB) 31 = Club Cab (131 WB) 84 = Quad Cab (131 WB)	EPE = 2.5L 4 Cylinder EHC = 3.9L 6 Cylinder EML = 5.0L 8 Cylinder EVA = 4.7L Magnum V8 EP0 = All 2.5L EH0 = All 3.9L EM0 = All 5.9L EV0 = All 4.7L	DGK = 4 Speed Automatic 42RE DGT = 4 Speed Automatic 46RE DDC = 5 Speed HD Manual DDK = 5 Speed HD Manual DG4 = Multispeed Automatic 45RFE DG0 = All Automatic Transmissions DBB = All Manual Transmissions

Manifold, Heat Shields, 3.9L [EHC]
Figure 3.9L-820

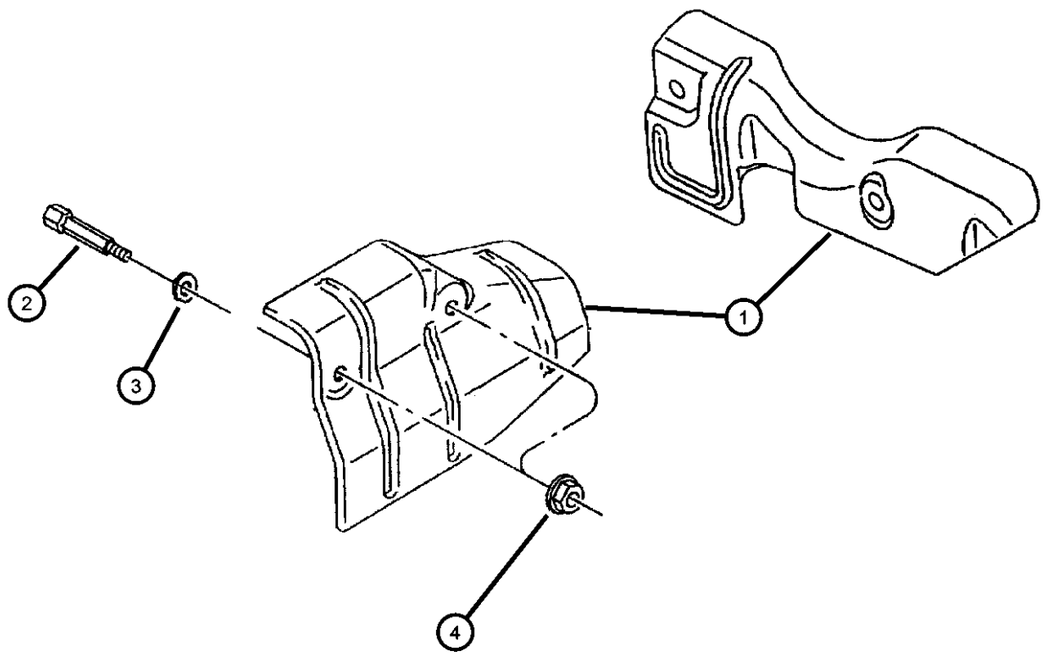

ITEM	PART NUMBER	QTY	LINE	SERIES	BODY	ENGINE	TRANS	TRIM	DESCRIPTION
Note; Sales Codes									
[EH0]= All 3.9L V-6 Gas Engines									
1									SHIELD, Exhaust Manifold
	53031039AB	1				EH0			Left
	53031040AB	1				EH0			Right
2	06035917	3				EH0			SCREW, Hex Head, .312-24x2.81
3	06035917	3							WASHER, (NOT SERVICED)
4	06035917	3							NUT, Hex, .312-24, (NOT SERVICED)

DAKOTA (AN)

SERIES	LINE	BODY	ENGINE	TRANSMISSION
L = Dakota (All)	1 = Dakota 2WD	61 = Regular Cab (112 WB)	EPE = 2.5L 4 Cylinder	DGK = 4 Speed Automatic 42RE
	5 = Dakota 4WD	31 = Club Cab (131 WB)	EHC = 3.9L 6 Cylinder	DGT = 4 Speed Automatic 46RE
		84 = Quad Cab (131 WB)	EML = 5.0L 8 Cylinder	DDC = 5 Speed HD Manual
			EVA = 4.7L Magnum V8	DDK = 5 Speed HD Manual
			EP0 = All 2.5L	DG4 = Multispeed Automatic 45RFE
			EH0 = All 3.9L	DG0 = All Automatic Transmissions
			EM0 = All 5.9L	DBB = All Manual Transmissions
			EV0 = All 4.7L	

Crankcase Ventilation, 3.9L [EHC]
Figure 3.9L-910

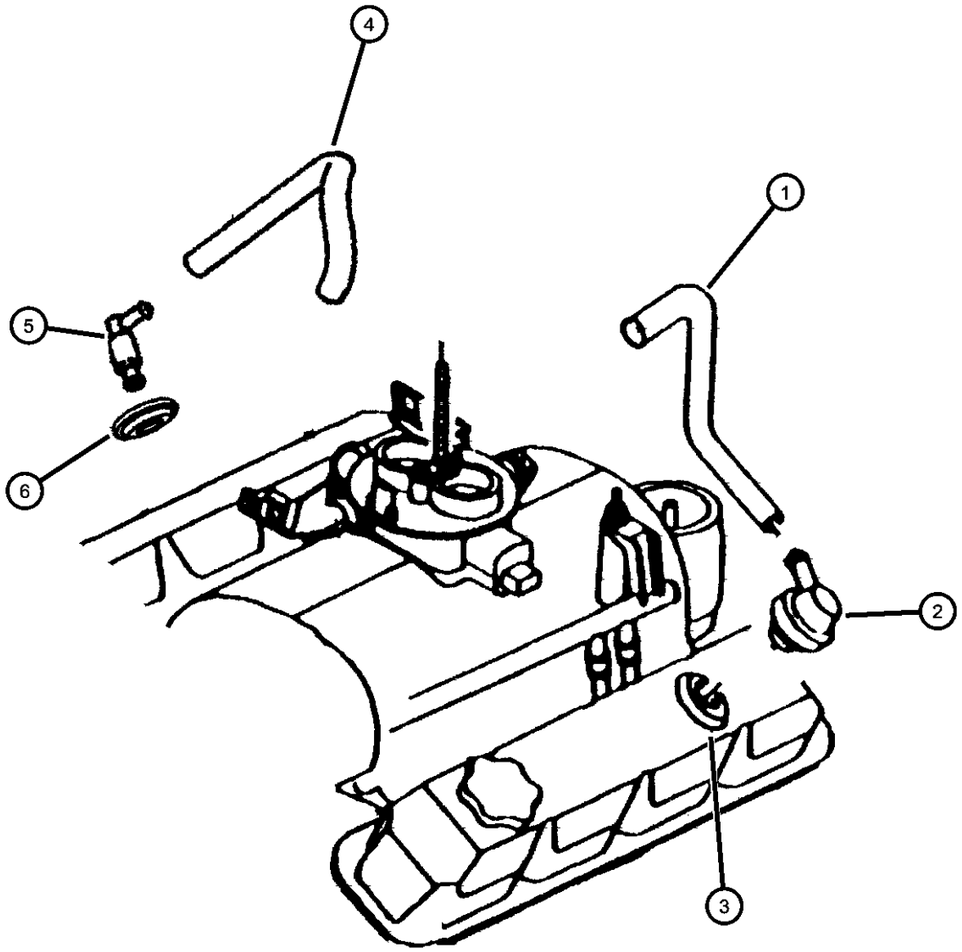

ITEM	PART NUMBER	QTY	LINE	SERIES	BODY	ENGINE	TRANS	TRIM	DESCRIPTION
Note; Sales Codes [EH0]= All 3.9L V-6 Gas Engines [EM0]= All 5.9L V-8 Gas Engines									
1	53031136AD	1				EH0, EM0			HOSE, Crankcase Vent
2	53030497	1				EH0, EM0			FITTING, Crankcase Vent Tube
3	02946079	1				EH0			GROMMET, Crankcase Vent
4	53008675AD	1				EH0, EM0			TUBE, PCV Valve
5	53031134	1				EH0			VALVE, Crankcase Vent
6	53030017	1				EH0, EM0			GROMMET, Crankcase Vent

DAKOTA (AN)

SERIES	LINE	BODY	ENGINE	TRANSMISSION
L = Dakota (All)	1 = Dakota 2WD 5 = Dakota 4WD	61 = Regular Cab (112 WB) 31 = Club Cab (131 WB) 84 = Quad Cab (131 WB)	EPE = 2.5L 4 Cylinder EHC = 3.9L 6 Cylinder EML = 5.0L 8 Cylinder EVA = 4.7L Magnum V8 EP0 = All 2.5L EH0 = All 3.9L EM0 = All 5.9L EV0 = All 4.7L	DGK = 4 Speed Automatic 42RE DGT = 4 Speed Automatic 46RE DDC = 5 Speed HD Manual DDK = 5 Speed HD Manual DG4 = Multispeed Automatic 45RFE DG0 = All Automatic Transmissions DBB = All Manual Transmissions

Group - 4.7L

Engine 4.7L Eight Cylinder

4.7L-200
Cylinder Head

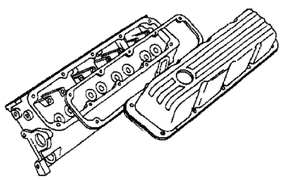

4.7L-300
Cylinder Block

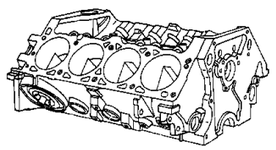

4.7L-400
Crankshaft, Pistons and Torque Converter

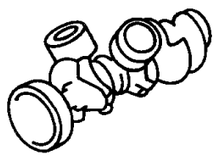

4.7L-500
Camshafts and Valves

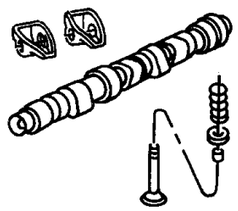

4.7L-600
Timing Belt and Cover

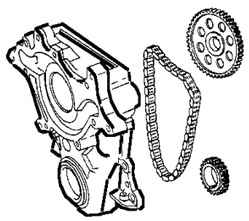

4.7L-700
Engine Oiling

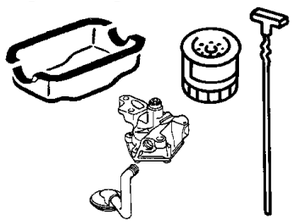

4.7L-800
Manifolds

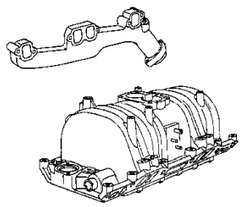

4.7L-900
Crankcase Ventilation

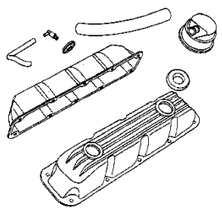

Group - 4.7L Engine 4.7L Eight Cylinder

Illustration Title — Group-Fig. No.

Cylinder Head
Cylinder Head, 4.7L [EVA] ..... Fig. 4.7L - 210

Cylinder Block
Cylinder Block, 4.7L [EVA] ..... Fig. 4.7L - 310

Crankshaft, Pistons and Torque Converter
Crankshaft, Piston and Torque Converter, 4.7L [EVA] ..... Fig. 4.7L - 410

Camshafts and Valves
Camshaft and Valves, 4.7L [EVA] ..... Fig. 4.7L - 510

Timing Belt and Cover
Timing Cover, 4.7L [EVA] ..... Fig. 4.7L - 610
Timing Chain and Guides, 4.7L [EVA] ..... Fig. 4.7L - 620

Engine Oiling
Engine Oiling, 4.7L [EVA] ..... Fig. 4.7L - 710

Manifolds
Manifold, Intake and Exhaust, 4.7L [EVA] ..... Fig. 4.7L - 810

Crankcase Ventilation
Crankcase Ventilation ..... Fig. 4.7L - 910

Cylinder Head, 4.7L [EVA]
Figure 4.7L-210

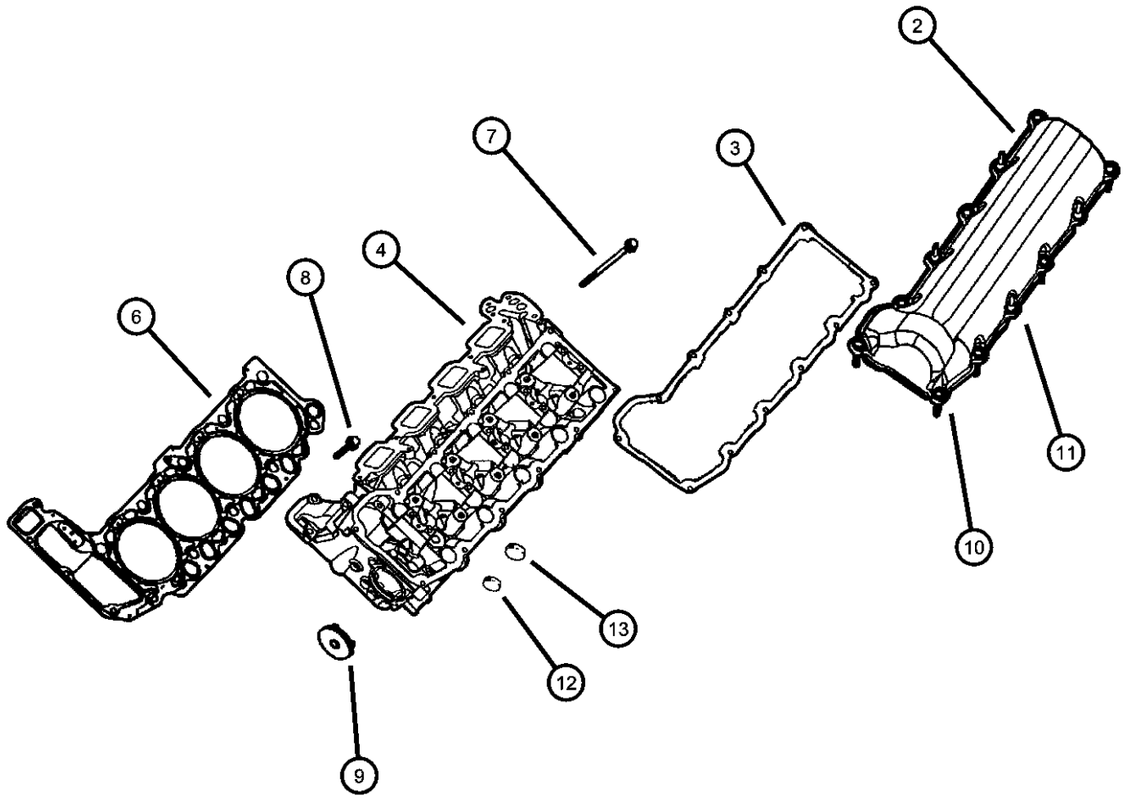

ITEM	PART NUMBER	QTY	LINE	SERIES	BODY	ENGINE	TRANS	TRIM	DESCRIPTION
NOTES: Upper Gasket Package Contains: Cylinder Head and Cylinder Head Cover Gaskets, Intake and Exhaust Manifold Gaskets, Throttle Body									
[EV0]= All 4.7L Gas Engines									
-1									GASKET PACKAGE, Engine Upper, See Notes
	05135794AA	1				EV0	DBB		
		1				EV0	DG0		
2									COVER, Cylinder Head
	53020657AD	1				EV0			Left
	53020874AE	1				EV0			Right
3									GASKET, Valve Cover
	53020877	1				EV0			Left
	53020878	1				EV0			Right
4	53020797AB	1				EV0			HEAD, Cylinder, Left
-5	53020798AB	1				EV0			HEAD, Cylinder, Right
6	53020673AC	2				EV0			GASKET, Cylinder Head
7	06505528AA	20				EV0			SCREW AND WASHER, Hex Head
8	06506785AA	8				EV0			SCREW AND WASHER, Hex Head
9	53021031	1				EV0			PLUG, Access Hole
10	53021031	1							SCREW, Serviced in Cylinder Head Cover, (NOT SERVICED)
11	53021031	1							STUD, Serviced in Cylinder Head Cover, (NOT SERVICED)
12	04556020	2				EV0			PLUG, Core, 1.25 Diameter
13	06034331	2				EV0			PLUG, Hex Socket, 3/8-18NPTx.475

DAKOTA (AN)

SERIES	LINE	BODY	ENGINE	TRANSMISSION
L = Dakota (All)	1 = Dakota 2WD	61 = Regular Cab (112 WB)	EPE = 2.5L 4 Cylinder	DGK = 4 Speed Automatic 42RE
	5 = Dakota 4WD	31 = Club Cab (131 WB)	EHC = 3.9L 6 Cylinder	DGT = 4 Speed Automatic 46RE
		84 = Quad Cab (131 WB)	EML = 5.0L 8 Cylinder	DDC = 5 Speed HD Manual
			EVA = 4.7L Magnum V8	DDK = 5 Speed HD Manual
			EP0 = All 2.5L	DG4 = Multispeed Automatic 45RFE
			EH0 = All 3.9L	DG0 = All Automatic Transmissions
			EM0 = All 5.9L	DBB = All Manual Transmissions
			EV0 = All 4.7L	

Cylinder Block, 4.7L [EVA]
Figure 4.7L-310

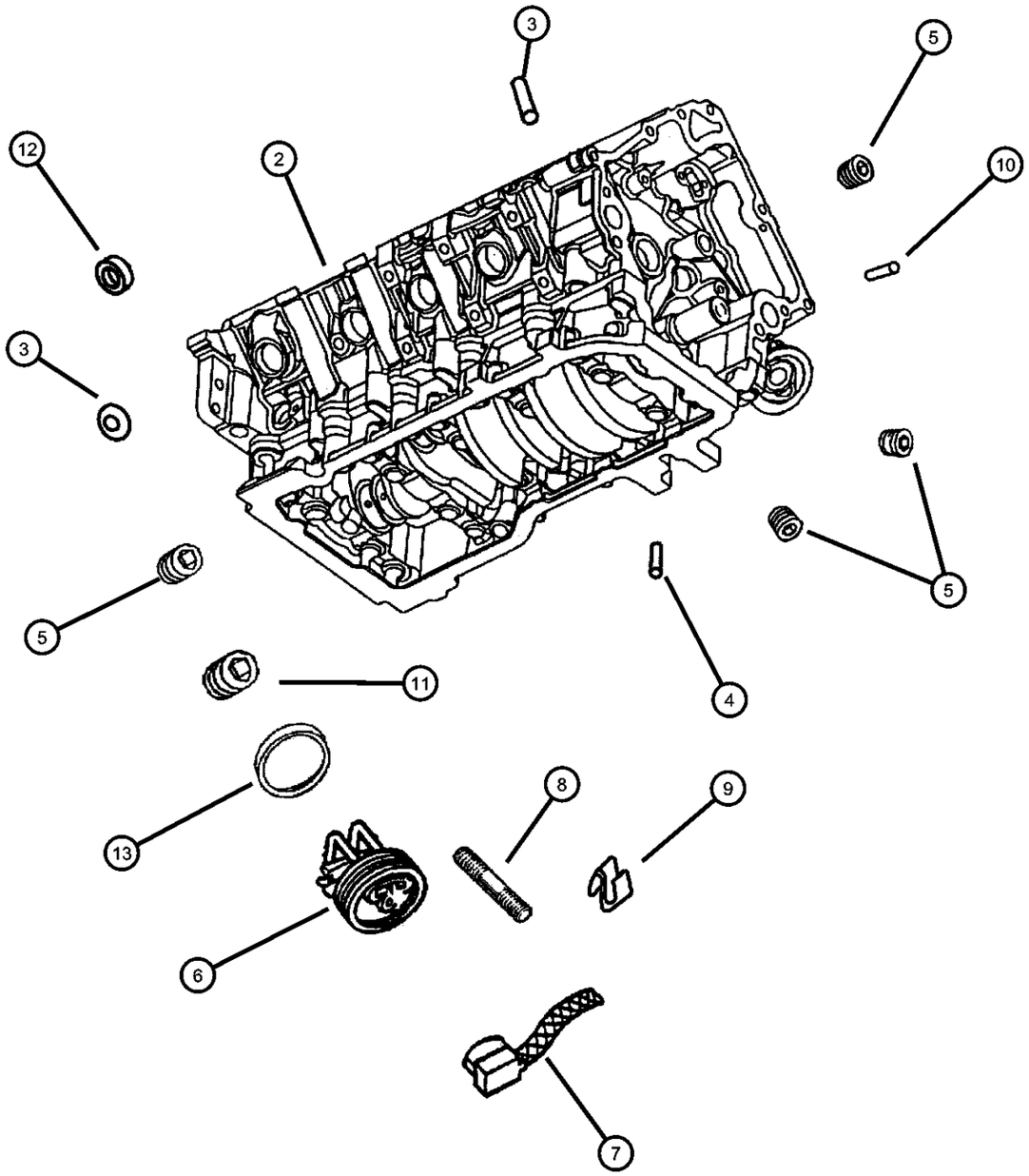

ITEM	PART NUMBER	QTY	LINE	SERIES	BODY	ENGINE	TRANS	TRIM	DESCRIPTION
NOTES: Lower Gasket Package contains: Front and Rear Crankshaft Seals, Oil Pick Up Tube Seal; Oil Pan, Chain Case and Water Pump Gaskets									
Sales Codes									
[EV0]= All 4.7L Gas Engines									
-1									GASKET PACKAGE, Engine Lower, See Notes
	05135796AA	1				EV0	DBB		
		1				EV0	DG0		
2	05072374AB	1				EV0			BLOCK, Short, Contains: Block, Bed Plate, Crank, Rods, Pistons, Rings, Oil Pump, Oil Pan
	04761844AC								Mopar 5W-30 Engine Oil Gallon
	04761838AB								Mopar 5W-20 Engine Oil Quart
3	06034804	10				EV0			PLUG, Core, 1.39 Diameter
4	06505457AA	3				EV0			PIN
5	06036114AA	4				EV0			PLUG, Pipe
6	82203640	1				EV0			HEATER PACKAGE, Engine Block
7	56020234	1				EH0, EM0, EV0			CORD, Engine Block Heater
8	56020234	1							SCREW, [.375-16x.625], (NOT SERVICED)
9	56020234	1							CLIP, (NOT SERVICED)
10	53010533AA	2				EV0			DOWEL
11	06034366	2				EV0			SCREW
12	04556019	1				EV0			PLUG, Cylinder Block Oil Hole
13	06501445	AR				EH0, EM0, EV0			O RING, Engine Block Heater
-14	05240849	4				EV0			DOWEL, Block To Clutch Housing

DAKOTA (AN)

SERIES	LINE	BODY	ENGINE	TRANSMISSION
L = Dakota (All)	1 = Dakota 2WD	61 = Regular Cab (112 WB)	EPE = 2.5L 4 Cylinder	DGK = 4 Speed Automatic 42RE
	5 = Dakota 4WD	31 = Club Cab (131 WB)	EHC = 3.9L 6 Cylinder	DGT = 4 Speed Automatic 46RE
		84 = Quad Cab (131 WB)	EML = 5.0L 8 Cylinder	DDC = 5 Speed HD Manual
			EVA = 4.7L Magnum V8	DDK = 5 Speed HD Manual
			EP0 = All 2.5L	DG4 = Multispeed Automatic 45RFE
			EH0 = All 3.9L	DG0 = All Automatic Transmissions
			EM0 = All 5.9L	DBB = All Manual Transmissions
			EV0 = All 4.7L	

Crankshaft, Piston and Torque Converter, 4.7L [EVA]
Figure 4.7L-410

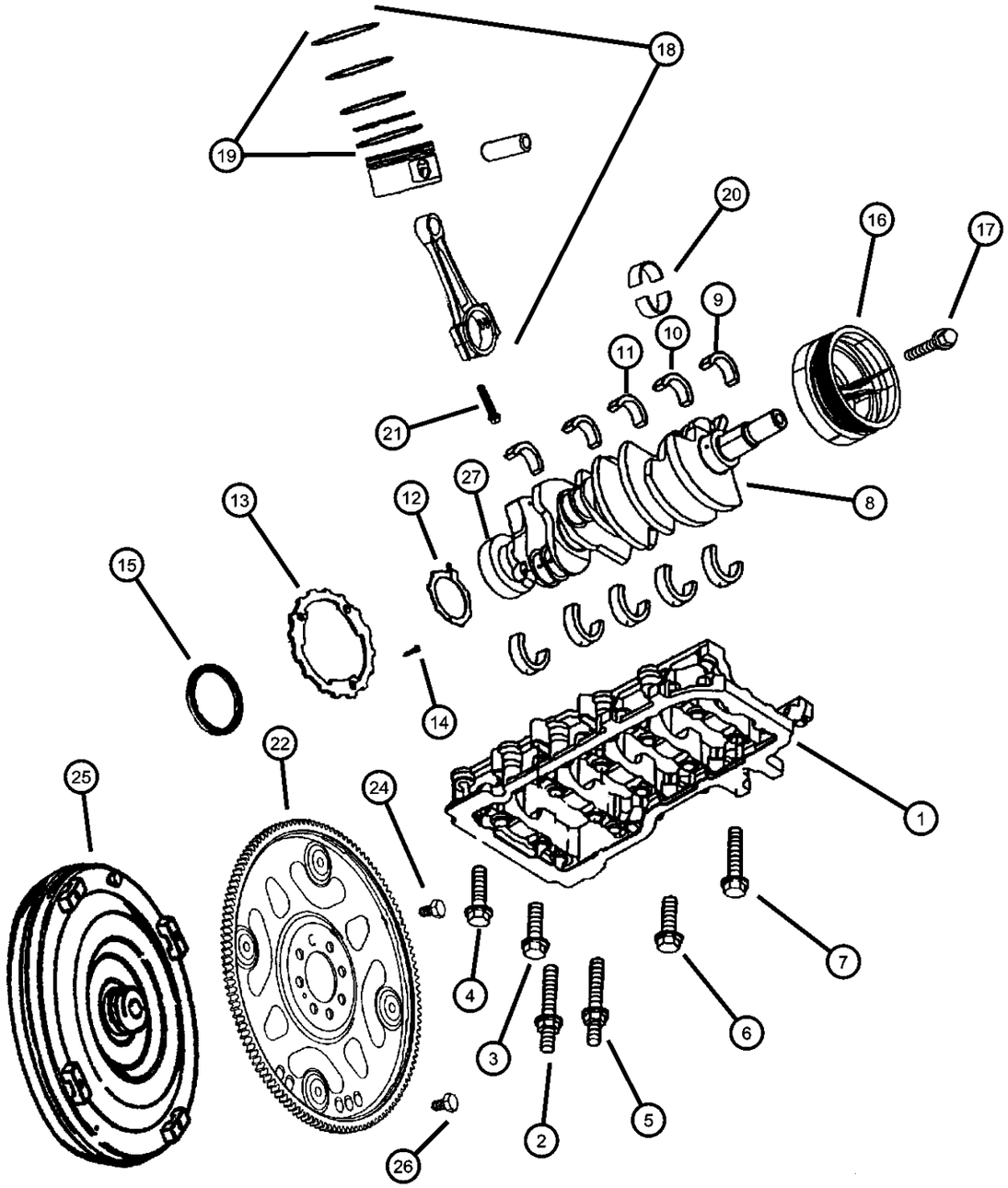

ITEM	PART NUMBER	QTY	LINE	SERIES	BODY	ENGINE	TRANS	TRIM	DESCRIPTION
Note; Sales Codes [DBB]= All Manual Transmissions [DG0]= All Automatic Transmissions [DG4]= Multi Speed Automatic Transmission 45RFE [EV0]= All 4.7L Gas Engines									
1	05240849	4							BEDPLATE, Serviced in Short Block Assembly, (NOT SERVICED)
2	06506187AA	2				EV0			STUD
3	06102047AA	6				EV0			SCREW, Hex Head, M8x1.25x50
4	06504411	7				EV0			SCREW
5	06506186AA	1				EV0			STUD
6	06504410	5				EV0			SCREW, Hex Head
7	06505394AA	7				EV0			SCREW AND WASHER
8	53020939	1				EV0			CRANKSHAFT
9	05013586AB	5				EV0			BEARING PACKAGE, Crankshaft, B Grade
10	05014183AA	5				EV0			BEARING PACKAGE, Crankshaft, A Grade
11	05014186AA	5				EV0			BEARING PACKAGE, Crankshaft, C Grade
12	05012356AB	1				EV0			WASHER PACKAGE, Washer
13	05012356AB	1							TONE RING, Sensor, Serviced in Crankshaft Assembly, (NOT SERVICED)
14	06504480	3				EV0			SCREW, M6x1x25
15	53020788	1				EV0			SEAL, Crankshaft Bearing Oil
16	53020689AB	1				EV0			DAMPER, Crankshaft
17	06504415	1				EV0			SCREW AND WASHER
18	05012362AC	8				EV0			PISTON PIN AND ROD, STD
19	05012364AC	8				EV0			RING PACKAGE, Piston, Standard Size
20	05012363AB	8				EV0			BEARING PACKAGE, Connecting Rod, Standard
21	06504720	16				EV0			BOLT, Connecting Rod
22	52104048	1				EV0	DG0		PLATE, Torque Converter Drive
-23	53020688AB	1				EV0	DBB		FLYWHEEL
24	06503465	8				EV0	DG0		BOLT, Drive Plate and Flywheel
25									TORQUE CONVERTER

DAKOTA (AN)

SERIES	LINE	BODY	ENGINE	TRANSMISSION
L = Dakota (All)	1 = Dakota 2WD 5 = Dakota 4WD	61 = Regular Cab (112 WB) 31 = Club Cab (131 WB) 84 = Quad Cab (131 WB)	EPE = 2.5L 4 Cylinder EHC = 3.9L 6 Cylinder EML = 5.0L 8 Cylinder EVA = 4.7L Magnum V8 EP0 = All 2.5L EH0 = All 3.9L EM0 = All 5.9L EV0 = All 4.7L	DGK = 4 Speed Automatic 42RE DGT = 4 Speed Automatic 46RE DDC = 5 Speed HD Manual DDK = 5 Speed HD Manual DG4 = Multispeed Automatic 45RFE DG0 = All Automatic Transmissions DBB = All Manual Transmissions

AR = use ase required - = Non illustrrated part

Crankshaft, Piston and Torque Converter, 4.7L [EVA]
Figure 4.7L-410

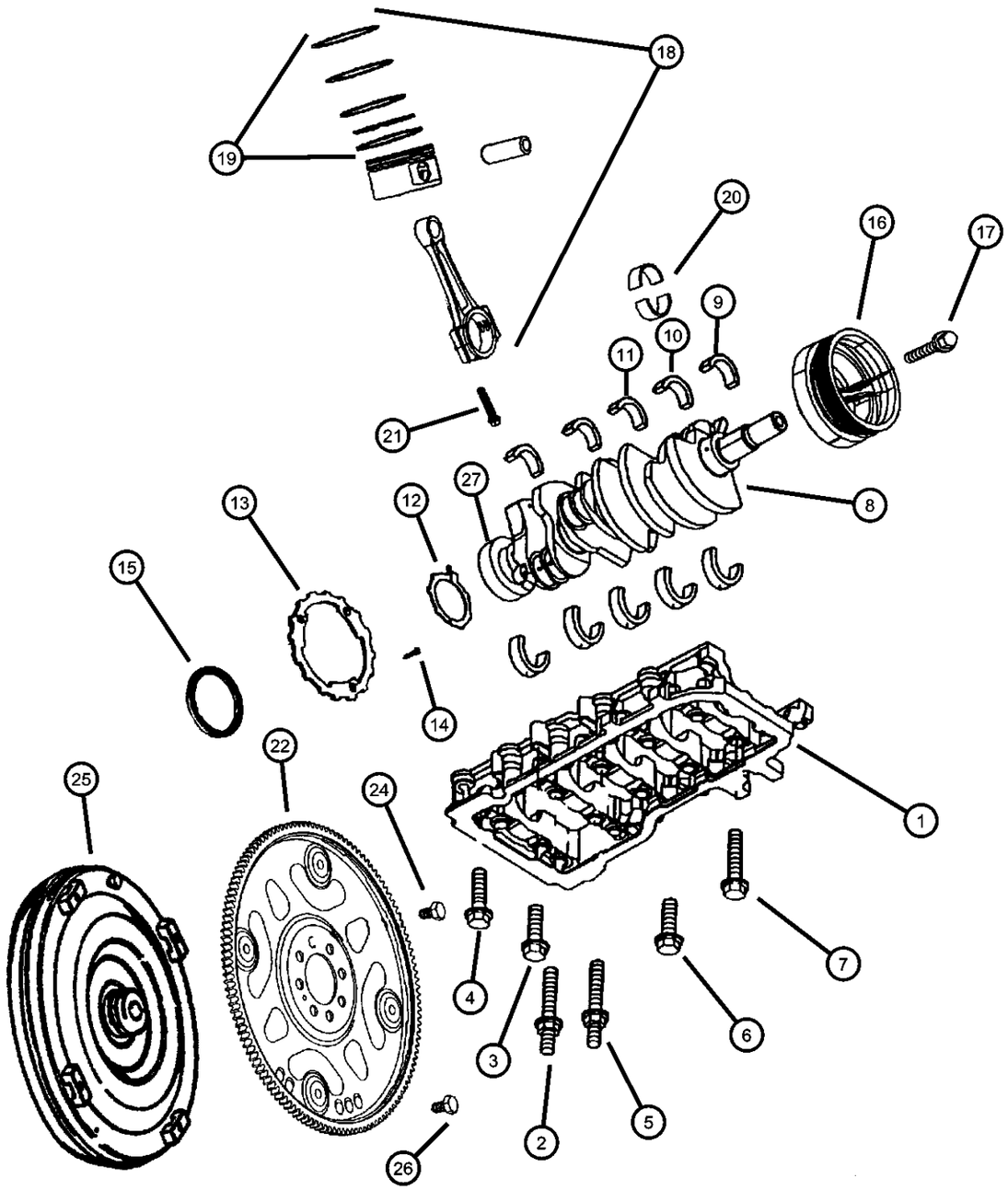

ITEM	PART NUMBER	QTY	LINE	SERIES	BODY	ENGINE	TRANS	TRIM	DESCRIPTION
	04736582	1	5				DG4		
		1	1				DG4		
26	01949765	4					DG0		SCREW, Hex Head Header Point, .312-24x.44
27	53009180AB	1				EV0	DBB		BEARING, Pilot

DAKOTA (AN)

SERIES	LINE	BODY	ENGINE	TRANSMISSION
L = Dakota (All)	1 = Dakota 2WD	61 = Regular Cab (112 WB)	EPE = 2.5L 4 Cylinder	DGK = 4 Speed Automatic 42RE
	5 = Dakota 4WD	31 = Club Cab (131 WB)	EHC = 3.9L 6 Cylinder	DGT = 4 Speed Automatic 46RE
		84 = Quad Cab (131 WB)	EML = 5.0L 8 Cylinder	DDC = 5 Speed HD Manual
			EVA = 4.7L Magnum V8	DDK = 5 Speed HD Manual
			EP0 = All 2.5L	DG4 = Multispeed Automatic 45RFE
			EH0 = All 3.9L	DG0 = All Automatic Transmissions
			EM0 = All 5.9L	DBB = All Manual Transmissions
			EV0 = All 4.7L	

Camshaft and Valves, 4.7L [EVA]
Figure 4.7L-510

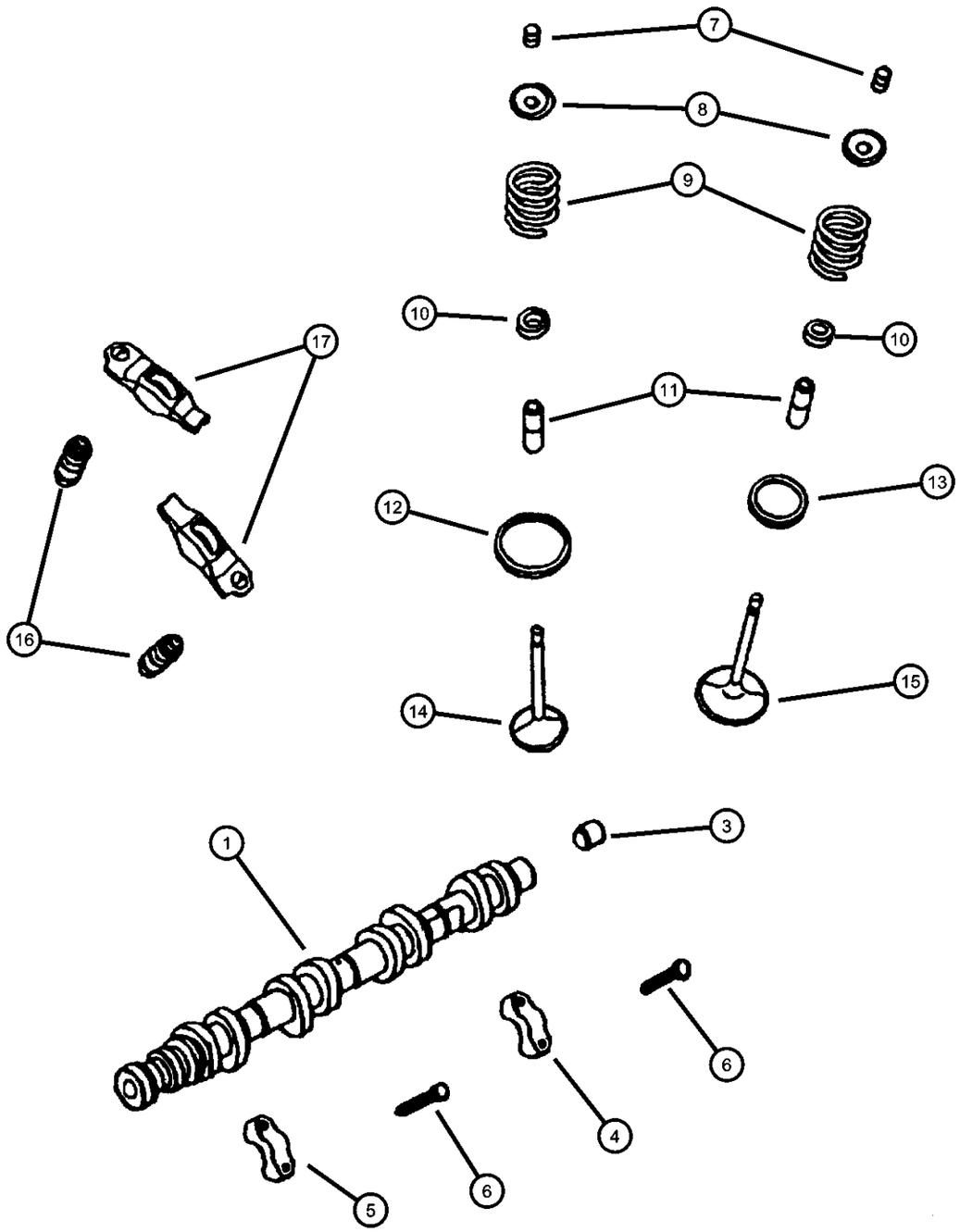

ITEM	PART NUMBER	QTY	LINE	SERIES	BODY	ENGINE	TRANS	TRIM	DESCRIPTION
Note; Sales Codes [EV0]= All 4.7L Gas Engines									
1	53021159AA	1				EV0			CAMSHAFT, Engine, Left
-2	53021160AA	1				EV0			CAMSHAFT, Engine, Right
3	53021161AA	1				EV0			PLUG, Camshaft
4	53021161AA	1							CAP, Serviced in Cylinder Head Assembly, (NOT SERVICED)
5	53021161AA	1							CAP, Serviced in Cylinder Head Assembly, (NOT SERVICED)
6	06505034AA	10				EV0			SCREW, M6x1x40
7	04536513AB	32				EV0			LOCK, Valve Spring Retainer
8	04781090AA	16				EV0			RETAINER, Valve Spring
9	53020749AC	16				EV0			SPRING, Valve
10	53020752AD	16				EV0			SEAL, Valve GuideIntake And Exhaust
11	53020752AD	16							GUIDE, Intake/Exhaust Valve, Standard Size, Serviced in Cylinder Head Assembly, (NOT SERVICED)
12	53020752AD	16							INSERT, Intake Valve, Serviced in Cylinder Head Assembly, (NOT SERVICED)
13	53020752AD	16							INSERT, Exhaust Valve, Serviced in Cylinder Head Assembly, (NOT SERVICED)
14	53020747AB	8				EV0			VALVE, Intake, Standard
15	53020748	8				EV0			VALVE, Exhaust, Standard
16	53021077	16				EV0			ADJUSTER, Valve Lash
17	53020742AB	16				EV0			ROCKER ARM, Valve

DAKOTA (AN)

SERIES	LINE	BODY	ENGINE	TRANSMISSION
L = Dakota (All)	1 = Dakota 2WD	61 = Regular Cab (112 WB)	EPE = 2.5L 4 Cylinder	DGK = 4 Speed Automatic 42RE
	5 = Dakota 4WD	31 = Club Cab (131 WB)	EHC = 3.9L 6 Cylinder	DGT = 4 Speed Automatic 46RE
		84 = Quad Cab (131 WB)	EML = 5.0L 8 Cylinder	DDC = 5 Speed HD Manual
			EVA = 4.7L Magnum V8	DDK = 5 Speed HD Manual
			EP0 = All 2.5L	DG4 = Multispeed Automatic 45RFE
			EH0 = All 3.9L	DG0 = All Automatic Transmissions
			EM0 = All 5.9L	DBB = All Manual Transmissions
			EV0 = All 4.7L	

Timing Cover, 4.7L [EVA]
Figure 4.7L-610

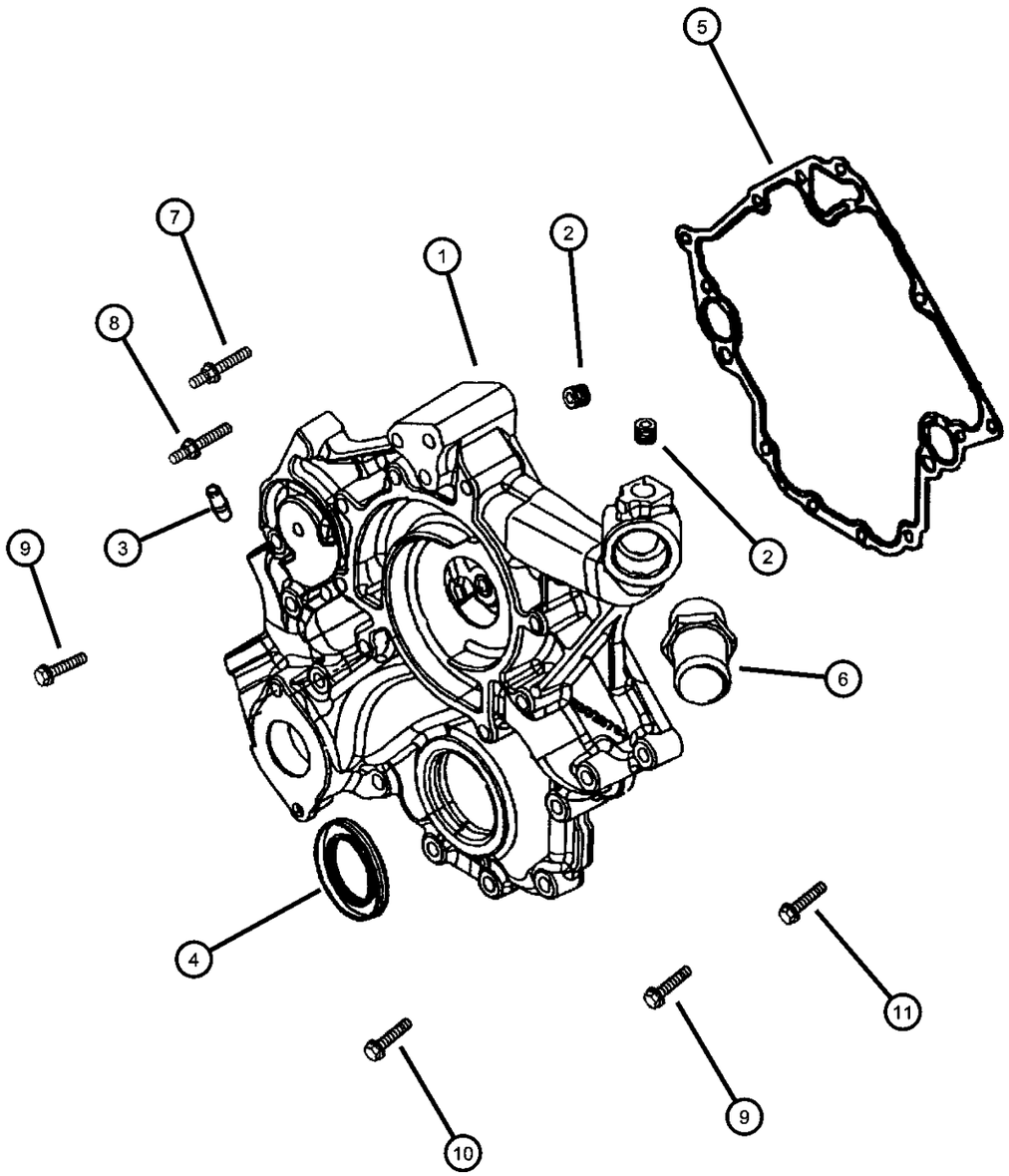

ITEM	PART NUMBER	QTY	LINE	SERIES	BODY	ENGINE	TRANS	TRIM	DESCRIPTION
Note; Sales Codes [EV0]= All 4.7L Gas Engines									
1	53021714AC	1				EV0			COVER, Timing Case
2	06034331	3				EV0			PLUG, Hex Socket, 3/8-18NPTx.475
3	06035854	2				EV0			FITTING, Y-Style
4	53021313AA	1				EV0			SEAL, Crankshaft Oil, Front
5	53020862	1				EV0			GASKET, Chain Case Cover
6	53020862	1							PIPE FITTING, Chain Case Cover, .375-18x2, Serviced With Item 1, (NOT SERVICED)
7	06505293AA	1				EV0			STUD
8	06506734AA	1				EV0			STUD
9	06101998	5				EV0			SCREW AND WASHER, Hex
10	06507144AA	5				EV0			SCREW AND WASHER, M10x1.50x45.00
11	06505579AA	2				EV0			SCREW AND WASHER

DAKOTA (AN)

SERIES	LINE	BODY	ENGINE	TRANSMISSION
L = Dakota (All)	1 = Dakota 2WD 5 = Dakota 4WD	61 = Regular Cab (112 WB) 31 = Club Cab (131 WB) 84 = Quad Cab (131 WB)	EPE = 2.5L 4 Cylinder EHC = 3.9L 6 Cylinder EML = 5.0L 8 Cylinder EVA = 4.7L Magnum V8 EP0 = All 2.5L EH0 = All 3.9L EM0 = All 5.9L EV0 = All 4.7L	DGK = 4 Speed Automatic 42RE DGT = 4 Speed Automatic 46RE DDC = 5 Speed HD Manual DDK = 5 Speed HD Manual DG4 = Multispeed Automatic 45RFE DG0 = All Automatic Transmissions DBB = All Manual Transmissions

Timing Chain and Guides, 4.7L [EVA]
Figure 4.7L-620

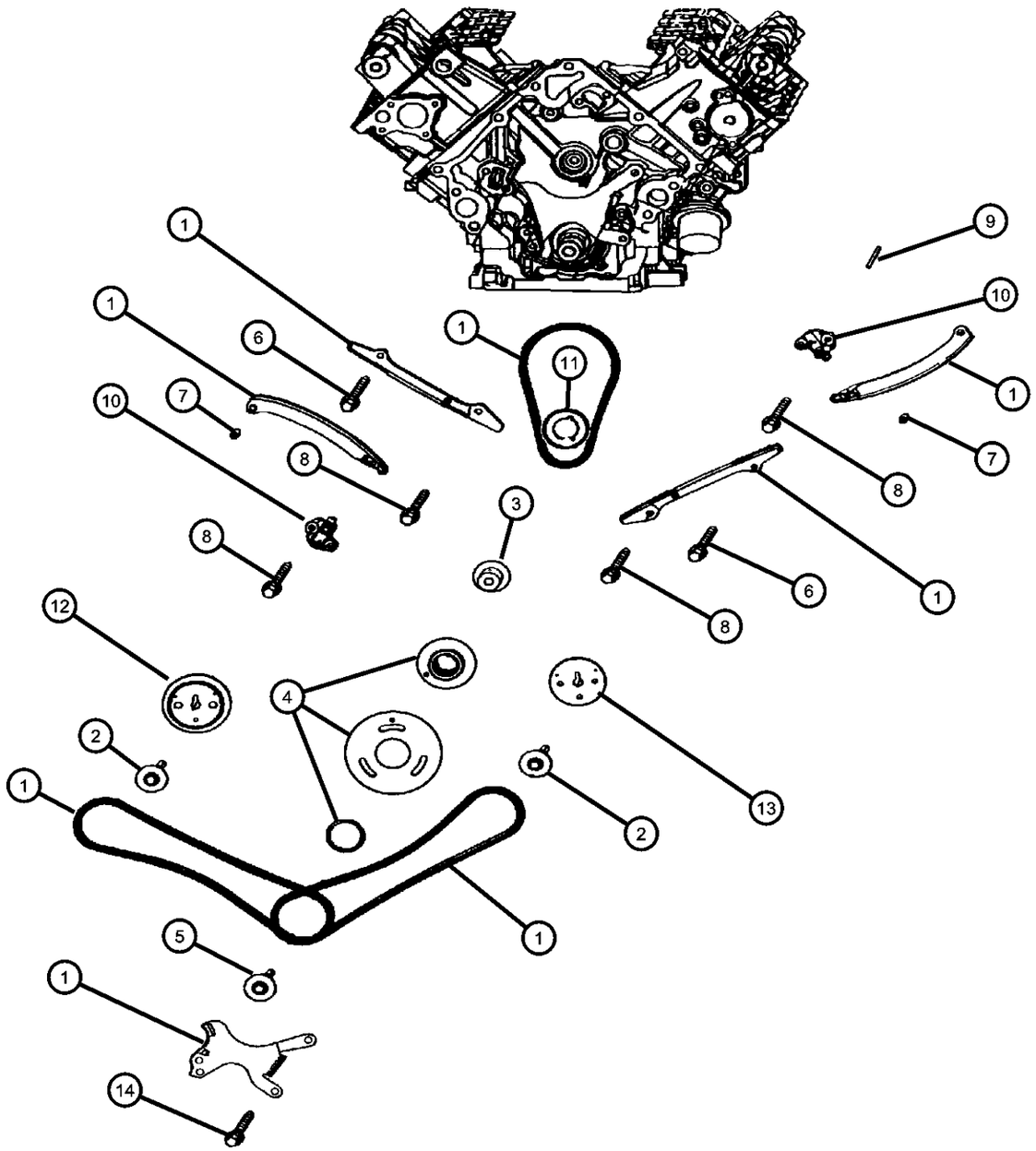

ITEM	PART NUMBER	QTY	LINE	SERIES	BODY	ENGINE	TRANS	TRIM	DESCRIPTION
Note; Sales Codes									
[EV0]= All 4.7L Gas Engines									
1	05013867AB	1				EV0			TIMING DRIVE PACKAGE, Engine
2	06504429	2				EV0			SCREW AND WASHER, Hex
3	53020835	1				EV0			SHAFT, Idler
4	05013868AB	1				EV0			SPROCKET, Idler
5	06504370	1				EV0			SCREW AND WASHER, Hex
6	06102111AA	2				EV0			SCREW AND WASHER
7	06504440	2				EV0			SCREW
8	06503257	6				EV0			BOLT, Hex Head, M8x1.25x37.50
9	06504471	1				EV0			KEY, Woodruff
10									TENSIONER, Chain
	53020779	1				EV0			Right
	53021168AA	1				EV0			Left
11	53020679	1				EV0			SPROCKET, Crankshaft
12	53021169AA	1				EV0			SPROCKET, Camshaft, Right
13	53020938	1				EV0			SPROCKET, Camshaft, Left
14	06100932	2				EV0			BOLT, Hex
-15	53021796AA	2				EV0			GUIDE, Timing Chain
-16	53020681	1				EV0			TENSIONER, Chain, Primary

DAKOTA (AN)

SERIES	LINE	BODY	ENGINE	TRANSMISSION
L = Dakota (All)	1 = Dakota 2WD	61 = Regular Cab (112 WB)	EPE = 2.5L 4 Cylinder	DGK = 4 Speed Automatic 42RE
	5 = Dakota 4WD	31 = Club Cab (131 WB)	EHC = 3.9L 6 Cylinder	DGT = 4 Speed Automatic 46RE
		84 = Quad Cab (131 WB)	EML = 5.0L 8 Cylinder	DDC = 5 Speed HD Manual
			EVA = 4.7L Magnum V8	DDK = 5 Speed HD Manual
			EP0 = All 2.5L	DG4 = Multispeed Automatic 45RFE
			EH0 = All 3.9L	DG0 = All Automatic Transmissions
			EM0 = All 5.9L	DBB = All Manual Transmissions
			EV0 = All 4.7L	

Engine Oiling, 4.7L [EVA]
Figure 4.7L-710

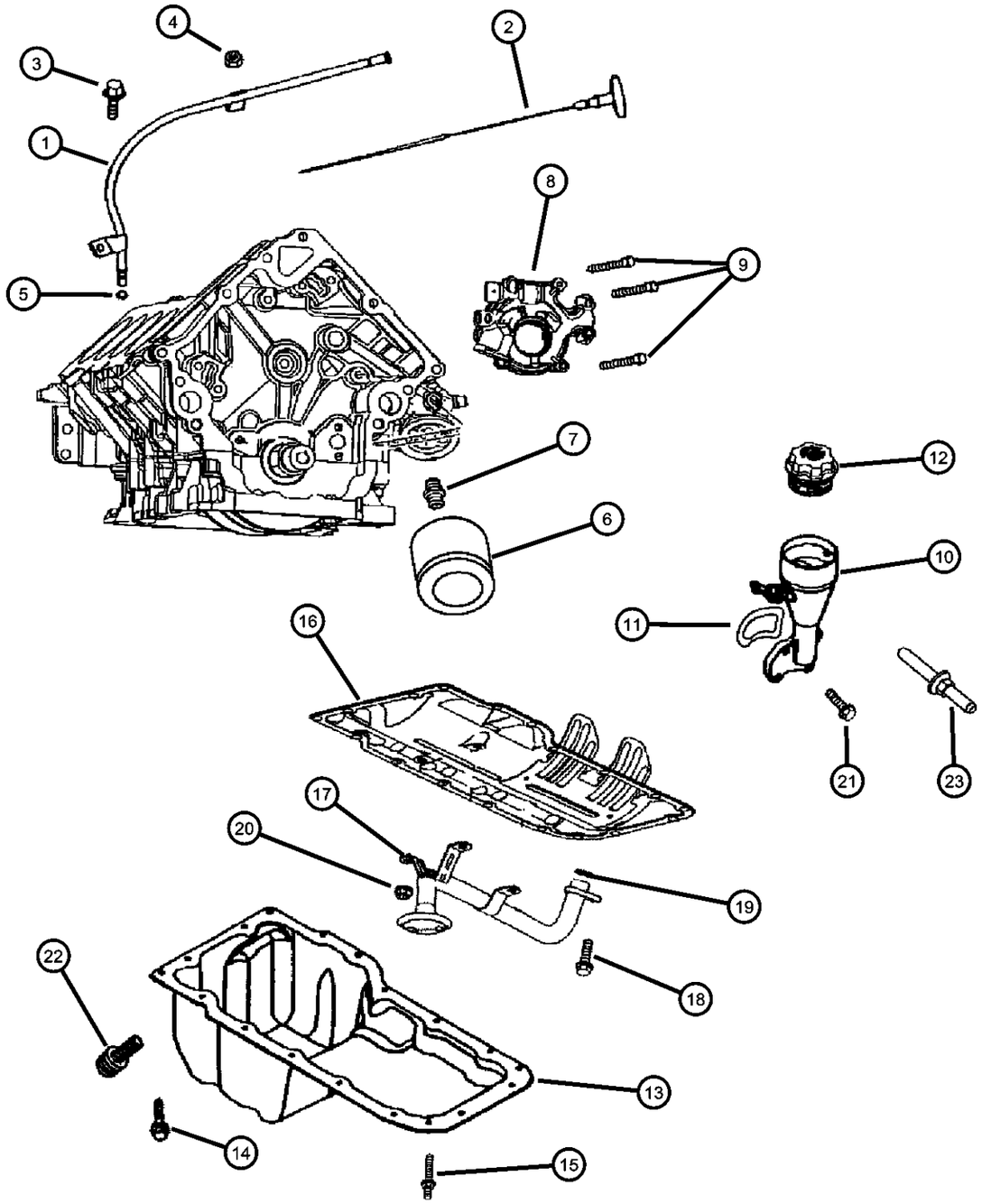

ITEM	PART NUMBER	QTY	LINE	SERIES	BODY	ENGINE	TRANS	TRIM	DESCRIPTION
Note; Sales Codes									
[EV0]= All 4.7L Gas Engines									
1	53021188AA	1				EV0			TUBE, Engine Oil Indicator
2									INDICATOR, Engine Oil Level
	53021003	1				EV0			Two Wheel Drive
	53021719AA	1	5			EV0			Four Wheel Drive
3	06504810AA	1				EV0			SCREW AND WASHER, Hex
4	06504810AA	1							NUT, M6x1.00, (NOT SERVICED)
5	53021144AA	1				EV0			O RING, Engine Oil Indicator
6	05281090	1				EV0			FILTER, Engine Oil
	0FE00292								Canadian Aftermarket Part
	05281090BA								BULK PACK (12)
	77060018								Performance Mobil 1, 15W - 50 Tri-Synthetic Engine Oil- Recommended Fill for 6.1L & 8.3L
7	53007563	1				EV0			CONNECTOR, Oil Filter
8	53020827	1				EV0			PUMP, Engine Oil
9	06100932	1				EV0			BOLT, Hex
10	53020890	1				EV0			HOUSING, Oil Fill
11	53020889AB	1				EV0			GASKET, Oil Fill Housing
12	53032389AB	1				EV0			CAP, Oil Filler
13	53020902	1				EV0			PAN, Engine Oil
14	06504810AA	17				EV0			SCREW AND WASHER, Hex
15	06505889AA	1				EV0			STUD
16	53020675AC	1				EV0			GASKET, Oil Pan
17	53020828	1				EV0			TUBE, Oil Pickup
18	06102046AA	1				EV0			SCREW AND WASHER
19	53020861	1				EV0			SEAL, Oil Pick Up Tube
20	06502756	3				EV0			NUT, Hex Lock, M8x1.25
21	06505504AA	3				EV0			SCREW, Oil Filler Housing Mounting
22	06504894AA	1				EV0			PLUG, Oil Drain
23	06505566AA	1				EV0			STUD, Oil Filler Housing Mounting

DAKOTA (AN)

SERIES	LINE	BODY	ENGINE	TRANSMISSION
L = Dakota (All)	1 = Dakota 2WD	61 = Regular Cab (112 WB)	EPE = 2.5L 4 Cylinder	DGK = 4 Speed Automatic 42RE
	5 = Dakota 4WD	31 = Club Cab (131 WB)	EHC = 3.9L 6 Cylinder	DGT = 4 Speed Automatic 46RE
		84 = Quad Cab (131 WB)	EML = 5.0L 8 Cylinder	DDC = 5 Speed HD Manual
			EVA = 4.7L Magnum V8	DDK = 5 Speed HD Manual
			EP0 = All 2.5L	DG4 = Multispeed Automatic 45RFE
			EH0 = All 3.9L	DG0 = All Automatic Transmissions
			EM0 = All 5.9L	DBB = All Manual Transmissions
			EV0 = All 4.7L	

Manifold, Intake and Exhaust, 4.7L [EVA]
Figure 4.7L-810

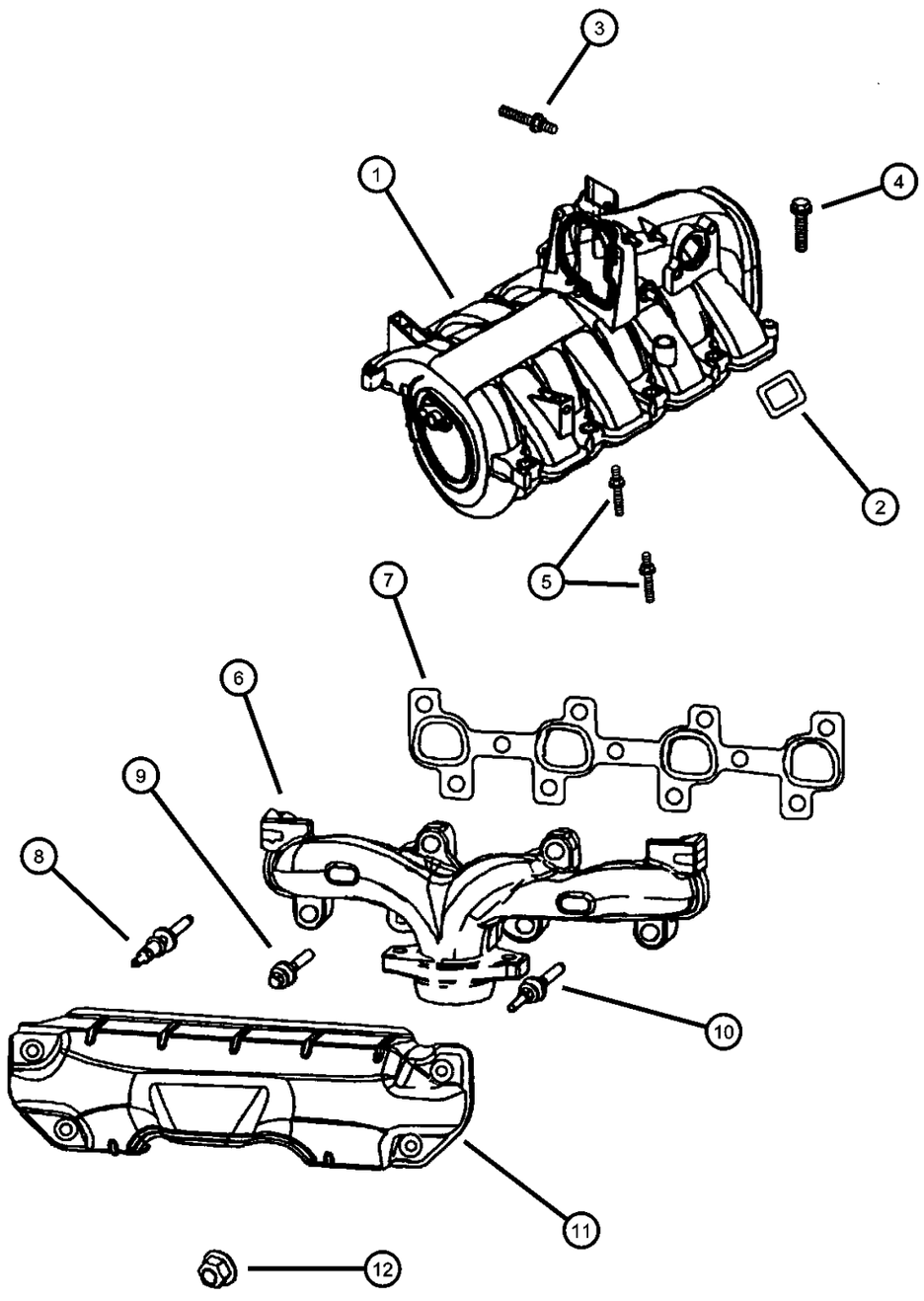

ITEM	PART NUMBER	QTY	LINE	SERIES	BODY	ENGINE	TRANS	TRIM	DESCRIPTION
Note; Sales Codes									
[EV0]= All 4.7L Gas Engines									
1	53010315AG	1				EV0			MANIFOLD, Intake
2	53010310	8				EV0			SEAL, Intake Manifold
3	06505498AA	1				EV0			STUD
4	06505499AA	2				EV0			SCREW
5	06505500AA	8				EV0			STUD
6									MANIFOLD, Exhaust
	53030808	1				EV0			Right
	53030809	1				EV0			Left
7									GASKET, Exhaust Manifold
	53030812	1				EV0			Right
	53030813	1				EV0			Left
8	06505257AA	4				EV0			STUD
9	06504340	8				EV0			SCREW AND WASHER, Hex
10	06504331	4				EV0			STUD
11									SHIELD, Exhaust Manifold
	53030814AB	1				EV0			Right
	53031706AB	1				EV0			Left
12	06505316AA	8				EV0			NUT

DAKOTA (AN)

SERIES	LINE	BODY	ENGINE	TRANSMISSION
L = Dakota (All)	1 = Dakota 2WD	61 = Regular Cab (112 WB)	EPE = 2.5L 4 Cylinder	DGK = 4 Speed Automatic 42RE
	5 = Dakota 4WD	31 = Club Cab (131 WB)	EHC = 3.9L 6 Cylinder	DGT = 4 Speed Automatic 46RE
		84 = Quad Cab (131 WB)	EML = 5.0L 8 Cylinder	DDC = 5 Speed HD Manual
			EVA = 4.7L Magnum V8	DDK = 5 Speed HD Manual
			EP0 = All 2.5L	DG4 = Multispeed Automatic 45RFE
			EH0 = All 3.9L	DG0 = All Automatic Transmissions
			EM0 = All 5.9L	DBB = All Manual Transmissions
			EV0 = All 4.7L	

Crankcase Ventilation
Figure 4.7L-910

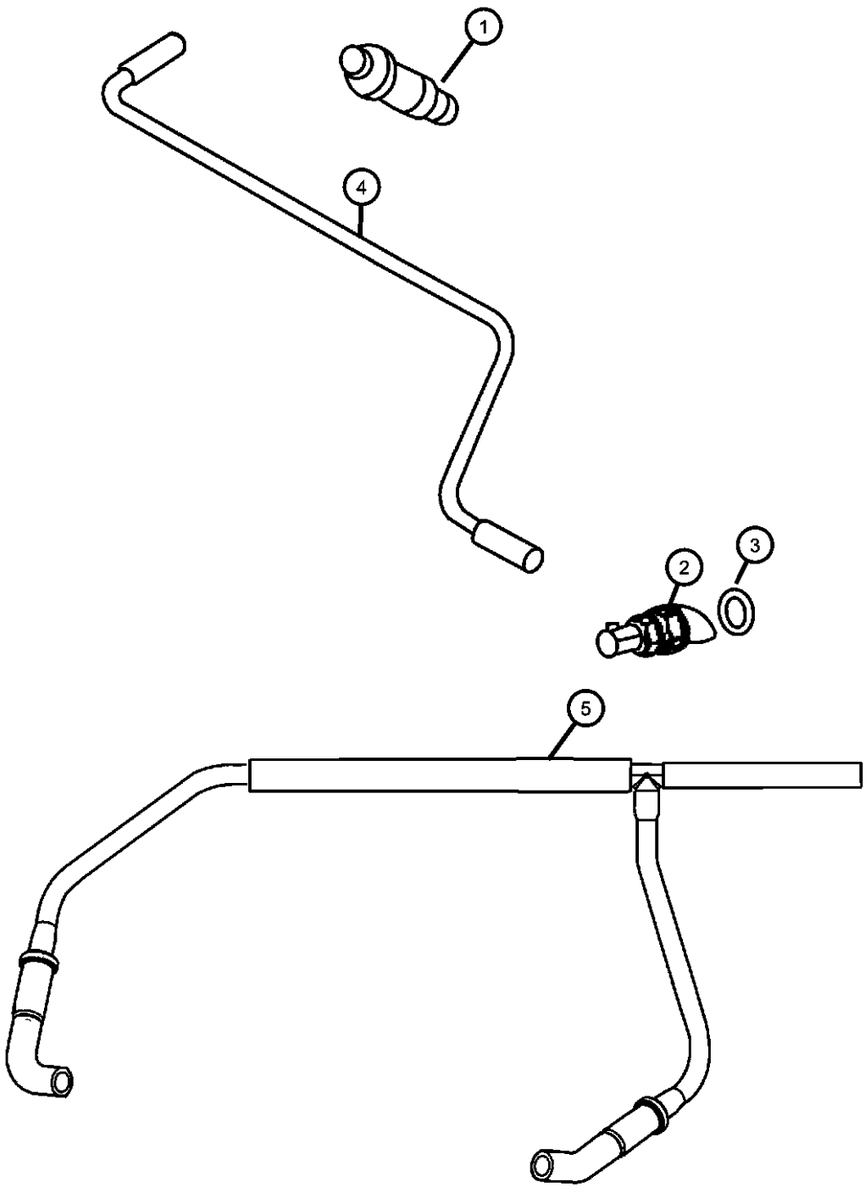

ITEM	PART NUMBER	QTY	LINE	SERIES	BODY	ENGINE	TRANS	TRIM	DESCRIPTION
1	53030850AB	2				EV0			BREATHER, Crankcase
2	53032800AA	1				EV0			VALVE, Crankcase Vent
3	53031711AA	1				EV0			O RING
4	53030851AC	1				EV0			TUBE, PCV Valve
5	53032090AB	1				EV0			HARNESS

DAKOTA (AN)

SERIES	LINE	BODY	ENGINE	TRANSMISSION
L = Dakota (All)	1 = Dakota 2WD	61 = Regular Cab (112 WB)	EPE = 2.5L 4 Cylinder	DGK = 4 Speed Automatic 42RE
	5 = Dakota 4WD	31 = Club Cab (131 WB)	EHC = 3.9L 6 Cylinder	DGT = 4 Speed Automatic 46RE
		84 = Quad Cab (131 WB)	EML = 5.0L 8 Cylinder	DDC = 5 Speed HD Manual
			EVA = 4.7L Magnum V8	DDK = 5 Speed HD Manual
			EP0 = All 2.5L	DG4 = Multispeed Automatic 45RFE
			EH0 = All 3.9L	DG0 = All Automatic Transmissions
			EM0 = All 5.9L	DBB = All Manual Transmissions
			EV0 = All 4.7L	

AR = use ase required - = Non illustrrated part

Group - 5.9L

Engine 5.9L Eight Cylinder

5.9L-200 Cylinder Head 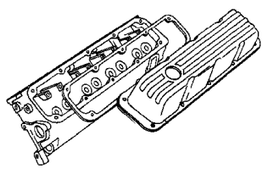	**5.9L-300** Cylinder Block 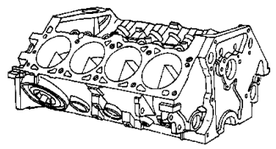	**5.9L-400** Crankshaft, Pistion and Torque Converter 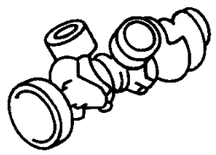	**5.9L-500** Camshafts & Valves 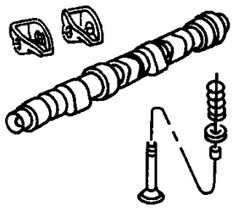
5.9L-600 Timing Belt and Cover 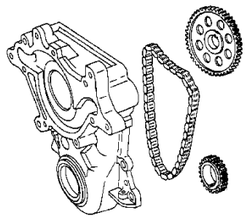	**5.9L-700** Engine Oiling 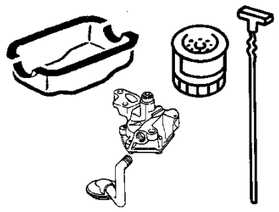	**5.9L-800** Manifolds 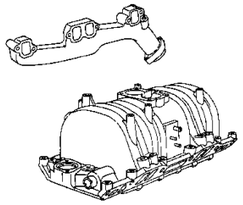	**5.9L-900** Crankcase Ventilation 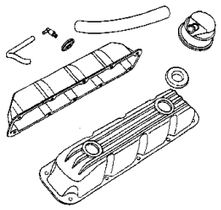

Group - 5.9L Engine 5.9L Eight Cylinder

Illustration Title — Group-Fig. No.

Cylinder Head
Cylinder Head, 5.9L [EML] ..... Fig. 5.9L - 210

Cylinder Block
Cylinder Block, 5.9L [EML] ..... Fig. 5.9L - 310

Crankshaft, Pistion and Torque Converter
Crankshaft, Piston and Torque Converter, 5.9L [EML] ..... Fig. 5.9L - 410

Camshafts & Valves
Camshaft and Valves, 5.9L [EML] ..... Fig. 5.9L - 510

Timing Belt and Cover
Timing Belt and Cover, 5.9L [EML] ..... Fig. 5.9L - 610

Engine Oiling
Engine Oiling, 5.9L [EML] ..... Fig. 5.9L - 710

Manifolds
Manifold, Intake and Exhaust, 5.9L [EML] ..... Fig. 5.9L - 810

Crankcase Ventilation
Crankcase Ventilation, 5.9L [EML] ..... Fig. 5.9L - 910

Cylinder Head, 5.9L [EML]
Figure 5.9L-210

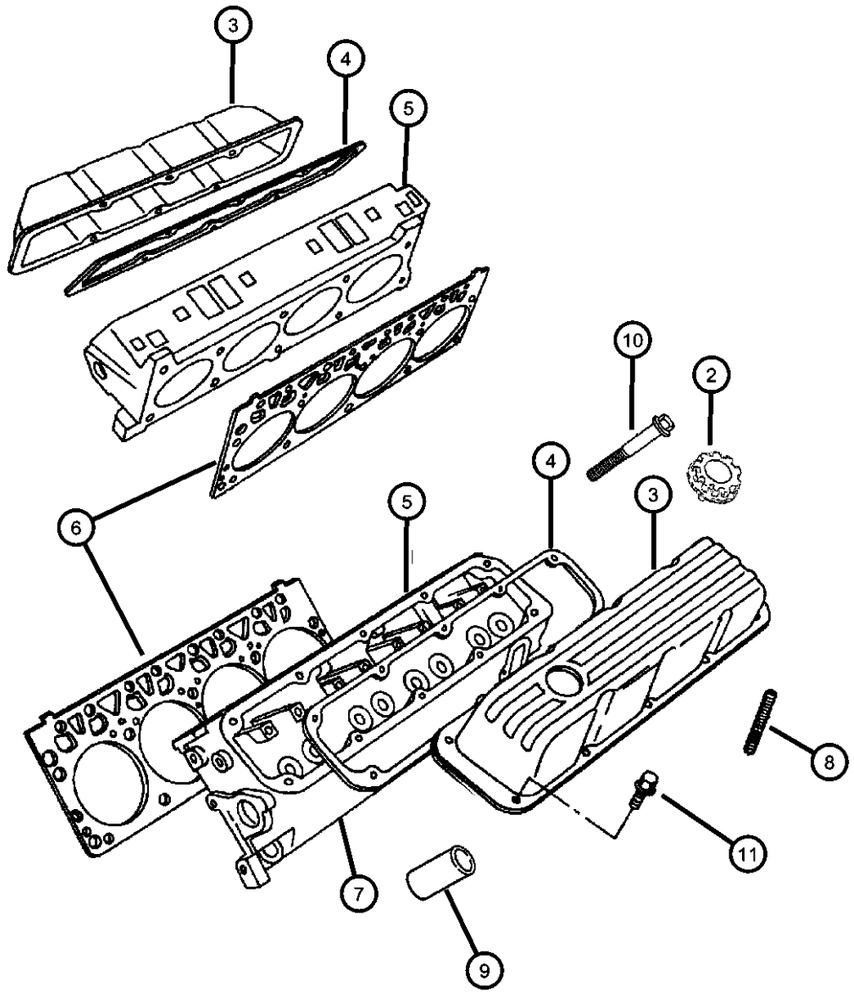

ITEM	PART NUMBER	QTY	LINE	SERIES	BODY	ENGINE	TRANS	TRIM	DESCRIPTION
Note; Sales Codes [EH0]= All 3.9L V-6 Gas Engines [EM0]= All 5.9L V-8 Gas Engines									
-1	04897386AE	1				EM0			GASKET PACKAGE, Engine Upper
2	04648831AA	1				EH0, EM0			CAP, Oil Filler
3									COVER, Cylinder Head
	53020340AC	1				EM0			With Oil Fill Hole
	53020612AC	1				EM0			Without Oil Fill Hole
4	53006695	2				EM0			GASKET, Valve Cover
5	53021139	2				EM0			HEAD, Cylinder
6	53021098AC	2				EM0			GASKET, Cylinder Head
7	04556020	4				EM0			PLUG, Core, 1.25 Diameter
8	06035878AA	14				EM0			STUD
9	53020419	8				EM0			SHIELD, Heat
10									BOLT, Cylinder Head
	06034690	10				EM0			.50-13x2.00
	06034691	10				EM0			.50-13x4.50
11	06035877AA	5				EM0			SCREW AND WASHER, Hex Head, .25-20x.875

DAKOTA (AN)

SERIES	LINE	BODY	ENGINE	TRANSMISSION
L = Dakota (All)	1 = Dakota 2WD 5 = Dakota 4WD	61 = Regular Cab (112 WB) 31 = Club Cab (131 WB) 84 = Quad Cab (131 WB)	EPE = 2.5L 4 Cylinder EHC = 3.9L 6 Cylinder EML = 5.0L 8 Cylinder EVA = 4.7L Magnum V8 EP0 = All 2.5L EH0 = All 3.9L EM0 = All 5.9L EV0 = All 4.7L	DGK = 4 Speed Automatic 42RE DGT = 4 Speed Automatic 46RE DDC = 5 Speed HD Manual DDK = 5 Speed HD Manual DG4 = Multispeed Automatic 45RFE DG0 = All Automatic Transmissions DBB = All Manual Transmissions

Cylinder Block, 5.9L [EML]
Figure 5.9L-310

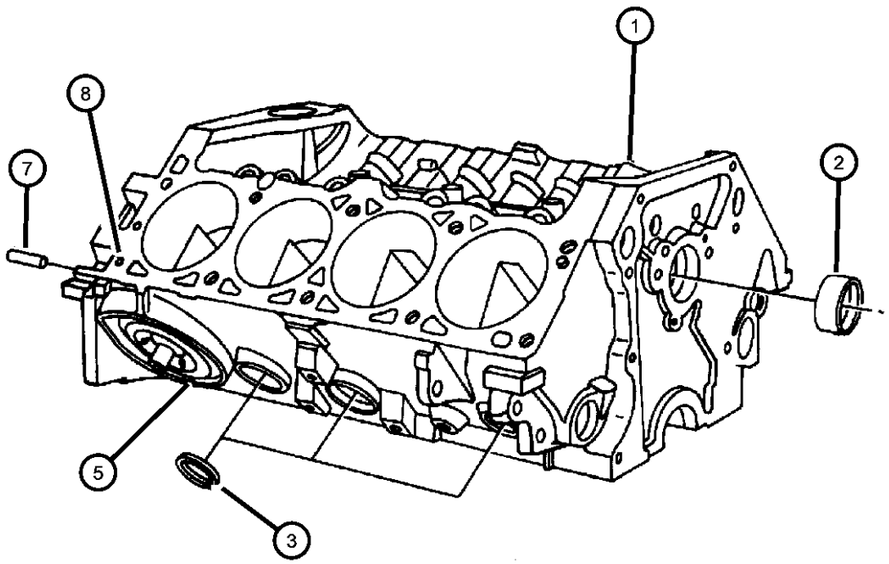

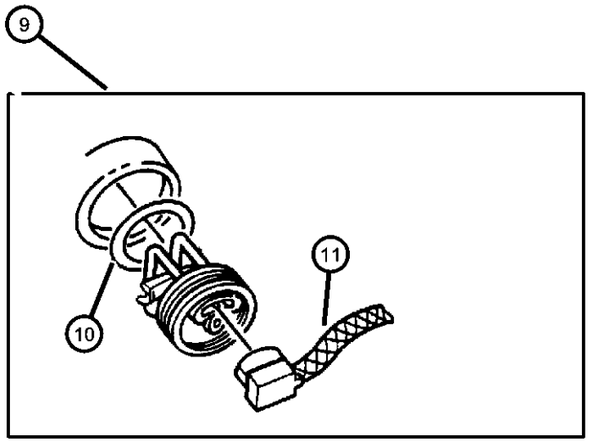

ITEM	PART NUMBER	QTY	LINE	SERIES	BODY	ENGINE	TRANS	TRIM	DESCRIPTION
Note; Sales Codes [EH0]= All 3.9L V-6 Gas Engines [EM0]= All 5.9L V-8 Gas Engines [EV0]= All 4.7L Gas Engines									
1	04899205AB	1				EM0			BLOCK, Short, Contains: Crank, Rods, Pistons, Rings, Cam Bearings
	04761845AC								Mopar 10W30 Engine Oil Gallon
	04761839AB								Mopar 10W30 Engine Oil Quart
2	03830603	1				EM0			BEARING, Camshaft, #1
3	04556020	2				EM0			PLUG, Core, 1.25 Diameter
-4	04556022	8				EM0			PLUG, Core, 1.625 Diameter
5	03751818	2				EM0			PLUG, Pipe
-6	53009518	1				EM0			PLUG, Cylinder Block Oil Hole
7	01122532	2				EM0			DOWEL, Block To Clutch Housing
8	00141215	4				EM0			DOWEL, .312 x .500
9	04798276AC	1				EH0, EM0			HEATER PACKAGE, Engine Block
10	06501445	AR				EH0, EM0, EV0			O RING, Engine Block Heater
11	56020234	1				EH0, EM0, EV0			CORD, Engine Block Heater

DAKOTA (AN)

SERIES	LINE	BODY	ENGINE	TRANSMISSION
L = Dakota (All)	1 = Dakota 2WD 5 = Dakota 4WD	61 = Regular Cab (112 WB) 31 = Club Cab (131 WB) 84 = Quad Cab (131 WB)	EPE = 2.5L 4 Cylinder EHC = 3.9L 6 Cylinder EML = 5.0L 8 Cylinder EVA = 4.7L Magnum V8 EP0 = All 2.5L EH0 = All 3.9L EM0 = All 5.9L EV0 = All 4.7L	DGK = 4 Speed Automatic 42RE DGT = 4 Speed Automatic 46RE DDC = 5 Speed HD Manual DDK = 5 Speed HD Manual DG4 = Multispeed Automatic 45RFE DG0 = All Automatic Transmissions DBB = All Manual Transmissions

Crankshaft, Piston and Torque Converter, 5.9L [EML]
Figure 5.9L-410

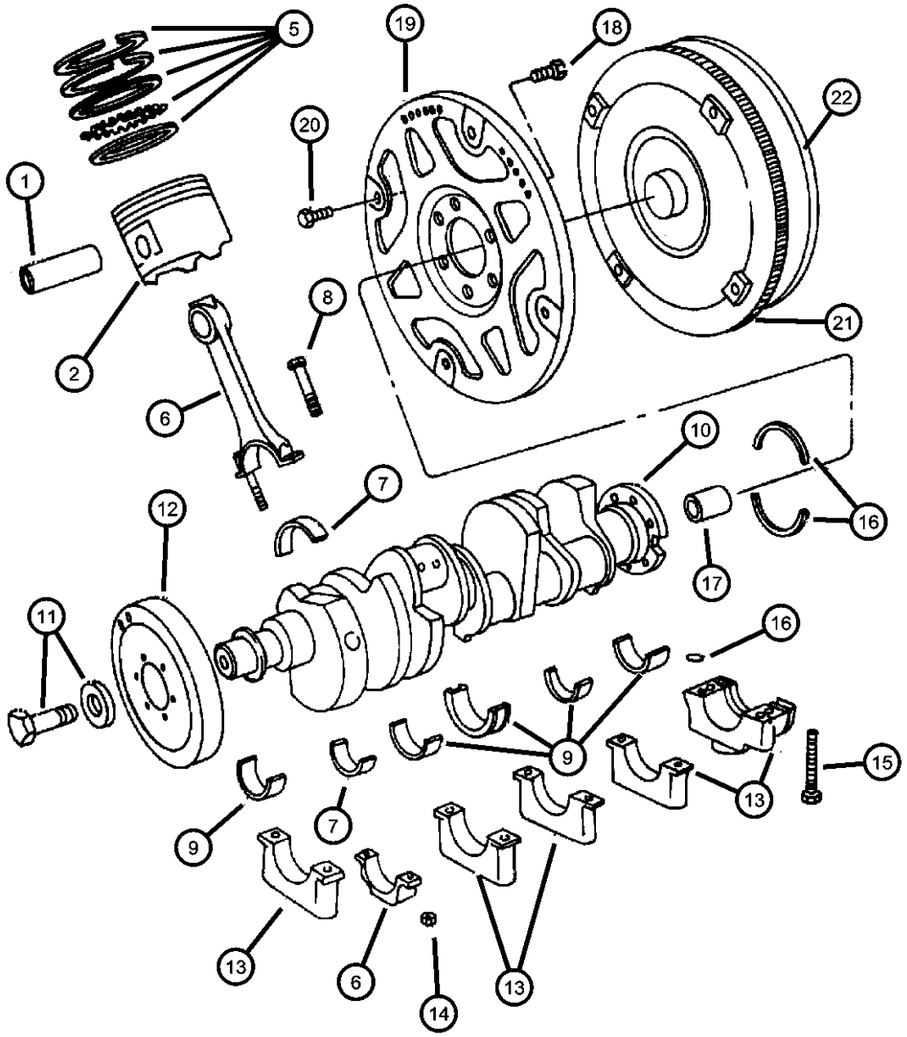

ITEM	PART NUMBER	QTY	LINE	SERIES	BODY	ENGINE	TRANS	TRIM	DESCRIPTION
Note; Sales Codes [DG0]= All Automatic Transmissions [EH0]= All 3.9L V-6 Gas Engines [EM0]= All 5.9L Gas Engines									
1	56020234	1							PIN, Piston, Serviced in Piston Assembly, (NOT SERVICED)
2									PISTON PIN AND ROD, B-Size
	04778871AD	4				EM0			#1,3,5,7
	04778872AD	4				EM0			#2,4,6,8
-3									PISTON PIN AND ROD, C-Size
	04778873AD	4				EM0			#1,3,5,7
	04778874AD	4				EM0			#2,4,6,8
-4									PISTON PIN AND ROD, D-Size
	04778875AD	4				EM0			#1,3,5,7
	04778876AD	4				EM0			#2,4,6,8
5	04740259	1				EM0			RING, Piston, Complete Set
6	04740259	1							ROD, Connecting, Serviced in Piston Assembly, (NOT SERVICED)
7									BEARING, Connecting Rod, STD.
	02421305	4				EM0			#1,3,5,7
		4				EM0			#2,4,6,8
8									BOLT, Connecting Rod
	06033441	8				EM0			#1,3,5,7
		8				EM0			#2,4,6,8
9									BEARING PACKAGE, Crankshaft, Standard Size
	03780100	1				EM0			#5
	04026487	3				EM0			#1,2,4
10	04790759AB	1				EM0	DG0		CRANKSHAFT AND KEY
11	06036207AA	1				EH0, EM0			BOLT, Hex Head
12	53021284AA	1				EM0			DAMPER, Crankshaft
13	53021284AA	1							CAP, Serviced in Block, (NOT SERVICED)
14									NUT, Hex, .375-24
	06036297AA	8				EM0			#1,3,5,7

DAKOTA (AN)

SERIES	LINE	BODY	ENGINE	TRANSMISSION
L = Dakota (All)	1 = Dakota 2WD 5 = Dakota 4WD	61 = Regular Cab (112 WB) 31 = Club Cab (131 WB) 84 = Quad Cab (131 WB)	EPE = 2.5L 4 Cylinder EHC = 3.9L 6 Cylinder EML = 5.0L 8 Cylinder EVA = 4.7L Magnum V8 EP0 = All 2.5L EH0 = All 3.9L EM0 = All 5.9L EV0 = All 4.7L	DGK = 4 Speed Automatic 42RE DGT = 4 Speed Automatic 46RE DDC = 5 Speed HD Manual DDK = 5 Speed HD Manual DG4 = Multispeed Automatic 45RFE DG0 = All Automatic Transmissions DBB = All Manual Transmissions

Crankshaft, Piston and Torque Converter, 5.9L [EML]
Figure 5.9L-410

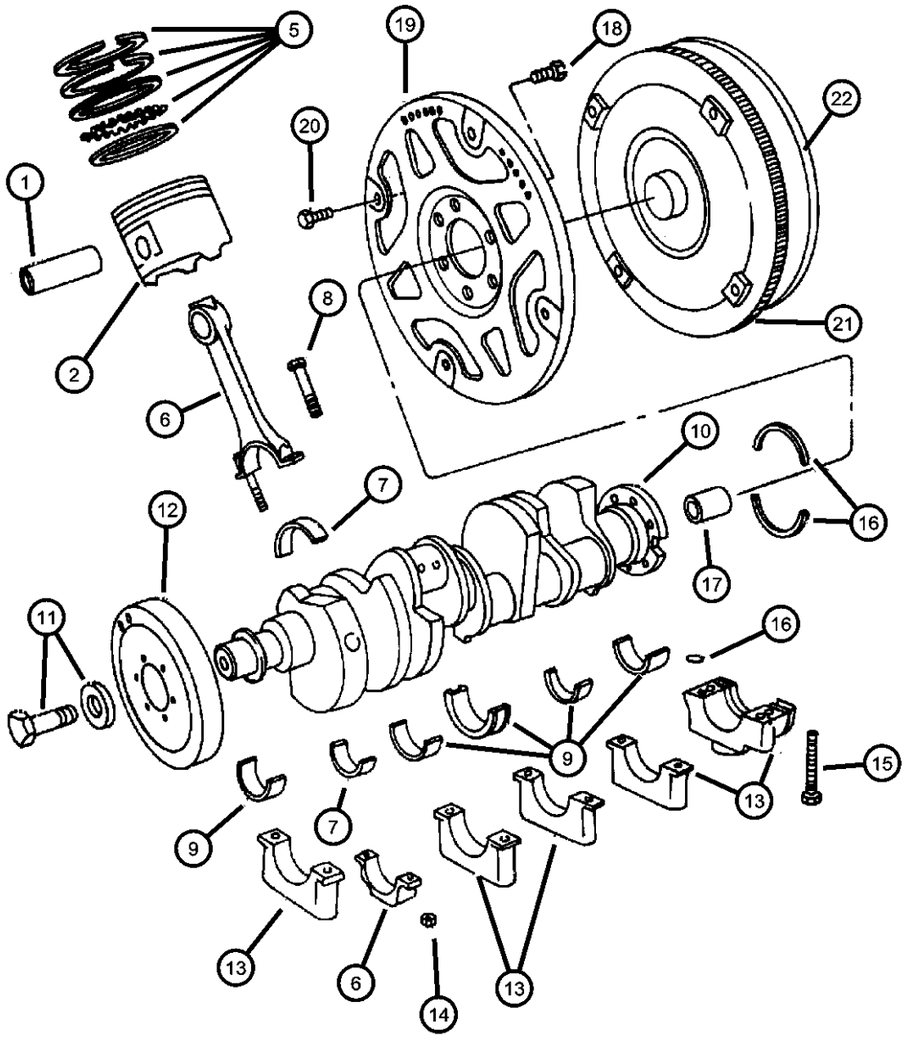

ITEM	PART NUMBER	QTY	LINE	SERIES	BODY	ENGINE	TRANS	TRIM	DESCRIPTION
		8				EM0			#2,4,6,8
15	06027264	10				EM0			SCREW, Socket Hex Head, .50-13x3.25
16	04798216AC	1				EM0			SEAL PACKAGE, Crankshaft
17	04798216AC	1							BEARING, Pilot, (NOT REQUIRED)
18	06035462	6				EH0, EM0	DG0		BOLT, Flexplate
19	04863841	1				EM0	DG0		PLATE, Torque Converter Drive
20	01949765	4					DG0		SCREW, Hex Head Header Point, .312-24x.44
21	03515203	1				EM0	DG0		GEAR, Ring
22	04736591AB	1				EM0	DG0		CONVERTER PACKAGE, Torque

DAKOTA (AN)

SERIES	LINE	BODY	ENGINE	TRANSMISSION
L = Dakota (All)	1 = Dakota 2WD	61 = Regular Cab (112 WB)	EPE = 2.5L 4 Cylinder	DGK = 4 Speed Automatic 42RE
	5 = Dakota 4WD	31 = Club Cab (131 WB)	EHC = 3.9L 6 Cylinder	DGT = 4 Speed Automatic 46RE
		84 = Quad Cab (131 WB)	EML = 5.0L 8 Cylinder	DDC = 5 Speed HD Manual
			EVA = 4.7L Magnum V8	DDK = 5 Speed HD Manual
			EP0 = All 2.5L	DG4 = Multispeed Automatic 45RFE
			EH0 = All 3.9L	DG0 = All Automatic Transmissions
			EM0 = All 5.9L	DBB = All Manual Transmissions
			EV0 = All 4.7L	

Camshaft and Valves, 5.9L [EML]
Figure 5.9L-510

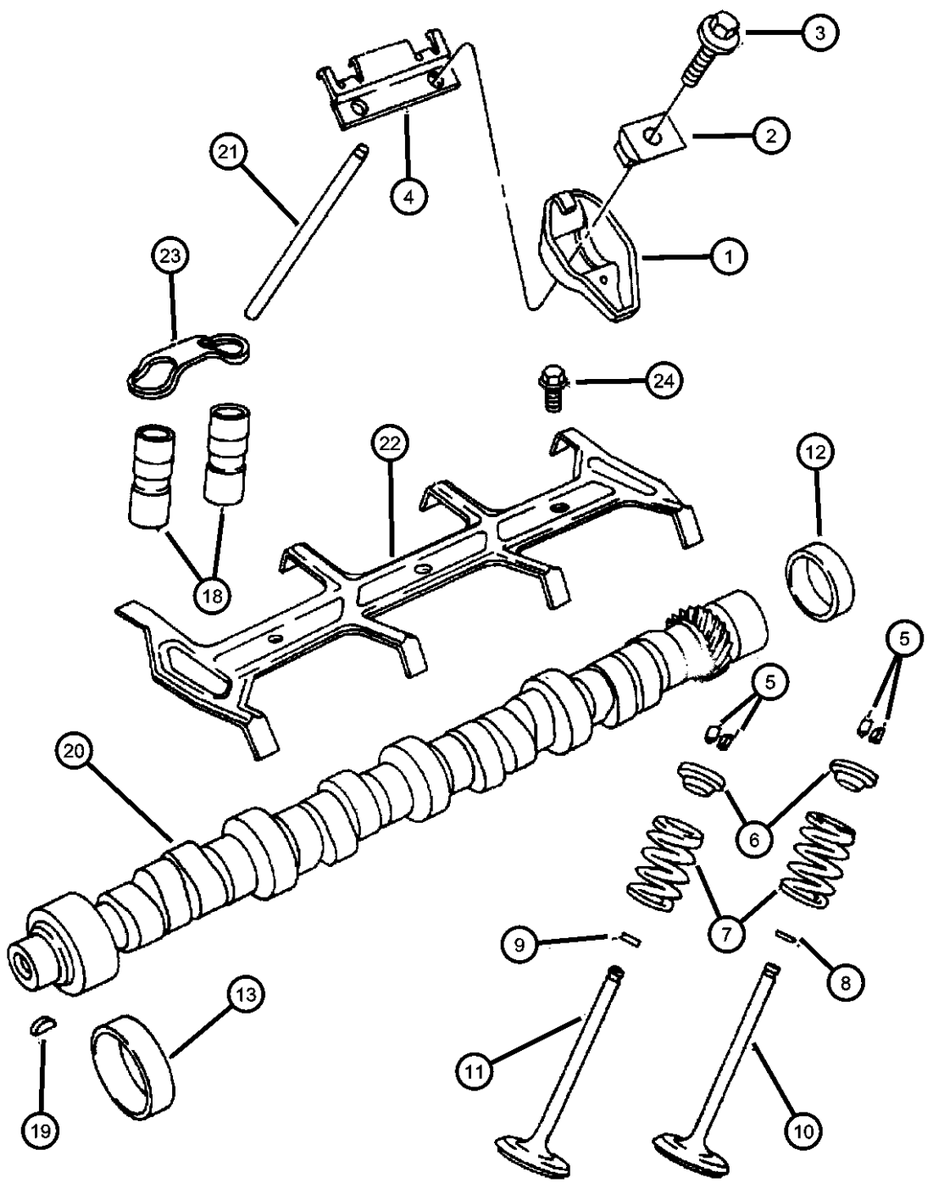

ITEM	PART NUMBER	QTY	LINE	SERIES	BODY	ENGINE	TRANS	TRIM	DESCRIPTION
Note; Sales Codes									
[EM0]= All 5.9L V-8 Gas Engines									
1	53008282	16				EM0			ROCKER ARM, Valve
2	53008283	16				EM0			PIVOT, Rocker Arm
3	06036154AA	16				EM0			BOLT, Hex Flange Head, .312-18x1.72
4	53008633	8				EM0			RETAINER, Rocker Arm Pivot
5	33003521	32				EM0			LOCK, Valve Spring Retainer
6	33004626	16				EM0			RETAINER, Valve Spring
7	53021056	16				EM0			SPRING, Valve
8	53009886	8				EM0			SEAL, Valve GuideIntake
9	53009887	8				EM0			SEAL, Valve GuideExhaust
10	53006723	8				EM0			VALVE, Intake, Standard
11	53006724	8				EM0			VALVE, Exhaust, Standard
12	02863071	1				EM0			PLUG, Camshaft
13	03830603	1				EM0			BEARING, Camshaft, #1
-14	04179776	1				EM0			BEARING, Camshaft, #2
-15	04179777	1				EM0			BEARING, Camshaft, #3
-16	04179778	1				EM0			BEARING, Camshaft, #3 or #4
-17	01632526	1				EM0			BEARING, Camshaft, #4 or #5
18	04713439	16				EM0			TAPPET PACKAGE, Valve
19	00431787	1				EM0			KEY, Camshaft Sprocket
20	53021101	1				EM0			CAMSHAFT, Engine
21	53006722	16				EM0			PUSH ROD, Valve
22	04323207	1				EM0			RETAINER, Tappet Yoke Aligning
23	04483045	8				EM0			YOKE, Tappet Aligning
24	01947953	3				EM0			SCREW AND WASHER, Hex Head

DAKOTA (AN)

SERIES	LINE	BODY	ENGINE	TRANSMISSION
L = Dakota (All)	1 = Dakota 2WD	61 = Regular Cab (112 WB)	EPE = 2.5L 4 Cylinder	DGK = 4 Speed Automatic 42RE
	5 = Dakota 4WD	31 = Club Cab (131 WB)	EHC = 3.9L 6 Cylinder	DGT = 4 Speed Automatic 46RE
		84 = Quad Cab (131 WB)	EML = 5.0L 8 Cylinder	DDC = 5 Speed HD Manual
			EVA = 4.7L Magnum V8	DDK = 5 Speed HD Manual
			EP0 = All 2.5L	DG4 = Multispeed Automatic 45RFE
			EH0 = All 3.9L	DG0 = All Automatic Transmissions
			EM0 = All 5.9L	DBB = All Manual Transmissions
			EV0 = All 4.7L	

Timing Belt and Cover, 5.9L [EML]
Figure 5.9L-610

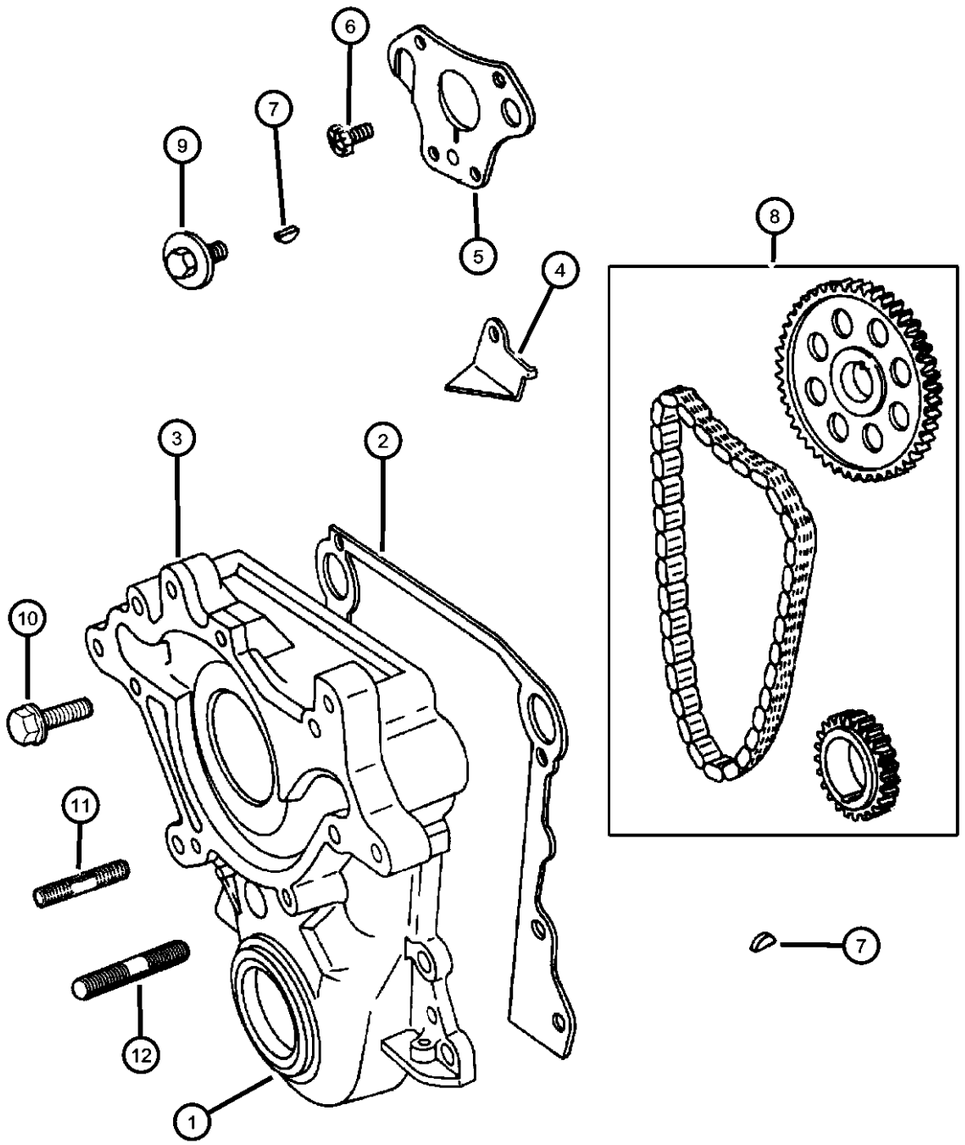

ITEM	PART NUMBER	QTY	LINE	SERIES	BODY	ENGINE	TRANS	TRIM	DESCRIPTION
Note; Sales Codes [DG0]= All Automatic Transmissions [EH0]= All 3.9L V-6 Gas Engines [EM0]= All 5.9L V-8 Gas Engines									
1	04897297AA	1				EM0			SEAL PACKAGE, Timing Case Cover
2	53021057AB	1				EM0			GASKET, Chain Case Cover
3	04897723AA	1				EM0			COVER PACKAGE, Engine Timing
4	03671649	1				EM0			TAB, Timing Chain Oil
5	04315764	1				EM0			PLATE, Camshaft Thrust
6	01947953	3				EH0, EM0			SCREW AND WASHER, Hex Head
7	06029411	1				EM0	DG0		KEY, Crankshaft Sprocket
8	83507095	1				EM0			CHAIN PACKAGE, Timing
9	06034321	1				EH0, EM0			SCREW AND WASHER, Hex Head, Coned, Header, .437-14x1.375
10	06034479	1				EH0, EM0			BOLT, Hex Head, .375-16x2.25
11	06034452	1				EH0, EM0			STUD, .375-16x.375-16x2.38
12	06034453	2				EH0, EM0			STUD, .375-16x.375-16x1.63

DAKOTA (AN)

SERIES	LINE	BODY	ENGINE	TRANSMISSION
L = Dakota (All)	1 = Dakota 2WD	61 = Regular Cab (112 WB)	EPE = 2.5L 4 Cylinder	DGK = 4 Speed Automatic 42RE
	5 = Dakota 4WD	31 = Club Cab (131 WB)	EHC = 3.9L 6 Cylinder	DGT = 4 Speed Automatic 46RE
		84 = Quad Cab (131 WB)	EML = 5.0L 8 Cylinder	DDC = 5 Speed HD Manual
			EVA = 4.7L Magnum V8	DDK = 5 Speed HD Manual
			EP0 = All 2.5L	DG4 = Multispeed Automatic 45RFE
			EH0 = All 3.9L	DG0 = All Automatic Transmissions
			EM0 = All 5.9L	DBB = All Manual Transmissions
			EV0 = All 4.7L	

Engine Oiling, 5.9L [EML]
Figure 5.9L-710

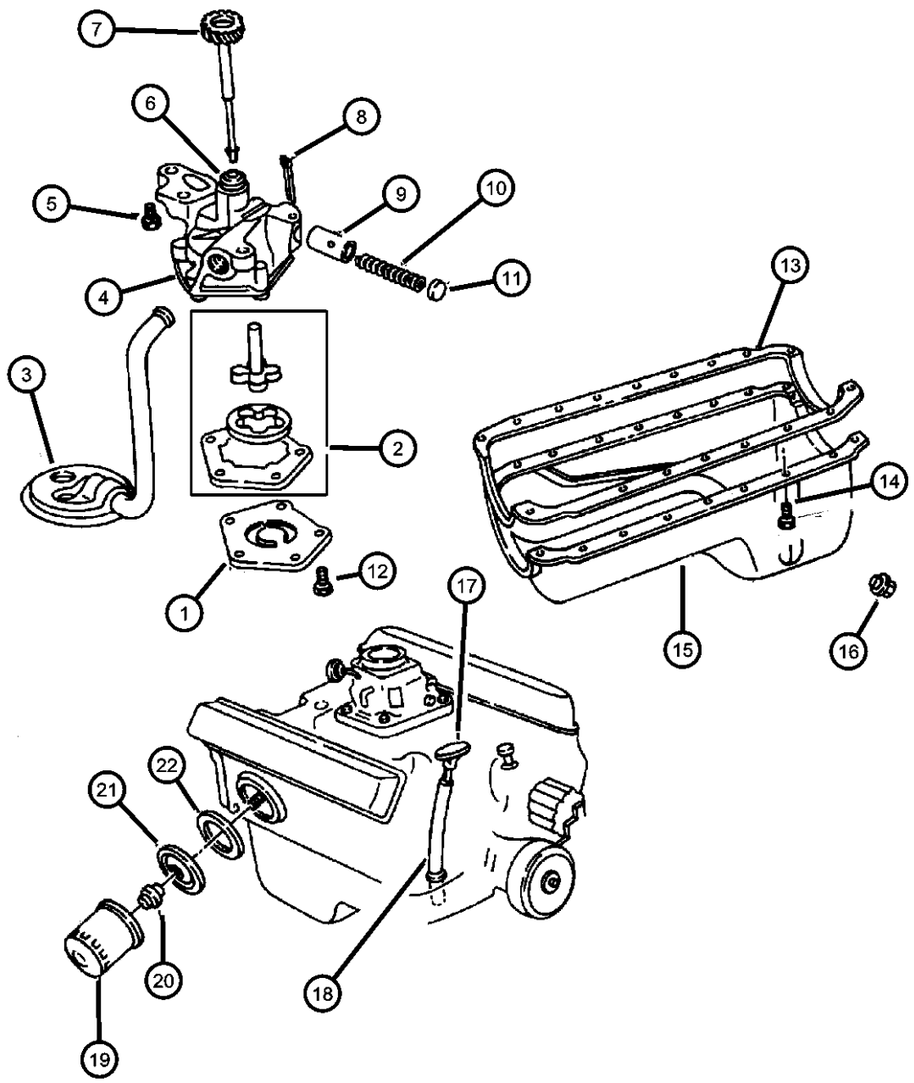

ITEM	PART NUMBER	QTY	LINE	SERIES	BODY	ENGINE	TRANS	TRIM	DESCRIPTION
Note; Sales Codes [EH0]= All 3.9L V-6 Gas Engines [EM0]= All 5.9L Gas Engines									
1	04071043	1				EM0			COVER, Engine Oil Pump
2	03837648	1				EM0			SHAFT AND ROTOR PACKAGE, Oil Pump
3	04315436	1				EM0			PICKUP, Engine Oil
4	53009295	1				EM0			PUMP, Engine Oil
5	00179842	2				EH0, EM0			SCREW, Hex Head Header Point, .375-16x1.375
6	01737725	1				EM0			BUSHING, Oil Pump and Distibutor
7	53020546	1				EH0, EM0			SHAFT, Oil Pump
8	00108636	1				EM0			PIN, Cotter
9	02843208	1				EM0			PLUNGER, Oil Pressure Relief Valve
10	02402473	1				EM0			SPRING, Oil Pressure Relief Valve
11	02806273	1				EM0			CAP, Oil Pressure Relief Valve
12	00220480	5				EM0			SCREW, Hex Head Header Point, .25-20x.75
13	53008610	1				EM0			GASKET, Oil Pan
14	06034549	18				EM0			SCREW, Hex Head, .312-18x.94
15	53020914AB	1				EM0			PAN, Engine Oil
16	06035417	1				EM0			PLUG, Oil Drain
17									INDICATOR, Engine Oil Level
	53021354AA	1	1			EM0			
	53021355AA	1	5			EM0			
18	53020926	1				EH0, EM0			TUBE, Oil Gauge
19	05281090	1				EH0, EM0			FILTER, Engine Oil
	0FE00292								Canadian Aftermarket Part
	05281090BA								BULK PACK (12)
	77060018								Performance Mobil 1, 15W - 50 Tri-Synthetic Engine Oil- Recommended Fill for 6.1L & 8.3L
20	53007563	1				EH0, EM0			CONNECTOR, Oil Filter
21	53021053	1				EH0, EM0			PLATE, Oil Filter Adapter
22	53020461AB	1				EH0, EM0			GASKET, Oil Filter Adapter

DAKOTA (AN)

SERIES	LINE	BODY	ENGINE	TRANSMISSION
L = Dakota (All)	1 = Dakota 2WD 5 = Dakota 4WD	61 = Regular Cab (112 WB) 31 = Club Cab (131 WB) 84 = Quad Cab (131 WB)	EPE = 2.5L 4 Cylinder EHC = 3.9L 6 Cylinder EML = 5.0L 8 Cylinder EVA = 4.7L Magnum V8 EP0 = All 2.5L EH0 = All 3.9L EM0 = All 5.9L EV0 = All 4.7L	DGK = 4 Speed Automatic 42RE DGT = 4 Speed Automatic 46RE DDC = 5 Speed HD Manual DDK = 5 Speed HD Manual DG4 = Multispeed Automatic 45RFE DG0 = All Automatic Transmissions DBB = All Manual Transmissions

Manifold, Intake and Exhaust, 5.9L [EML]
Figure 5.9L-810

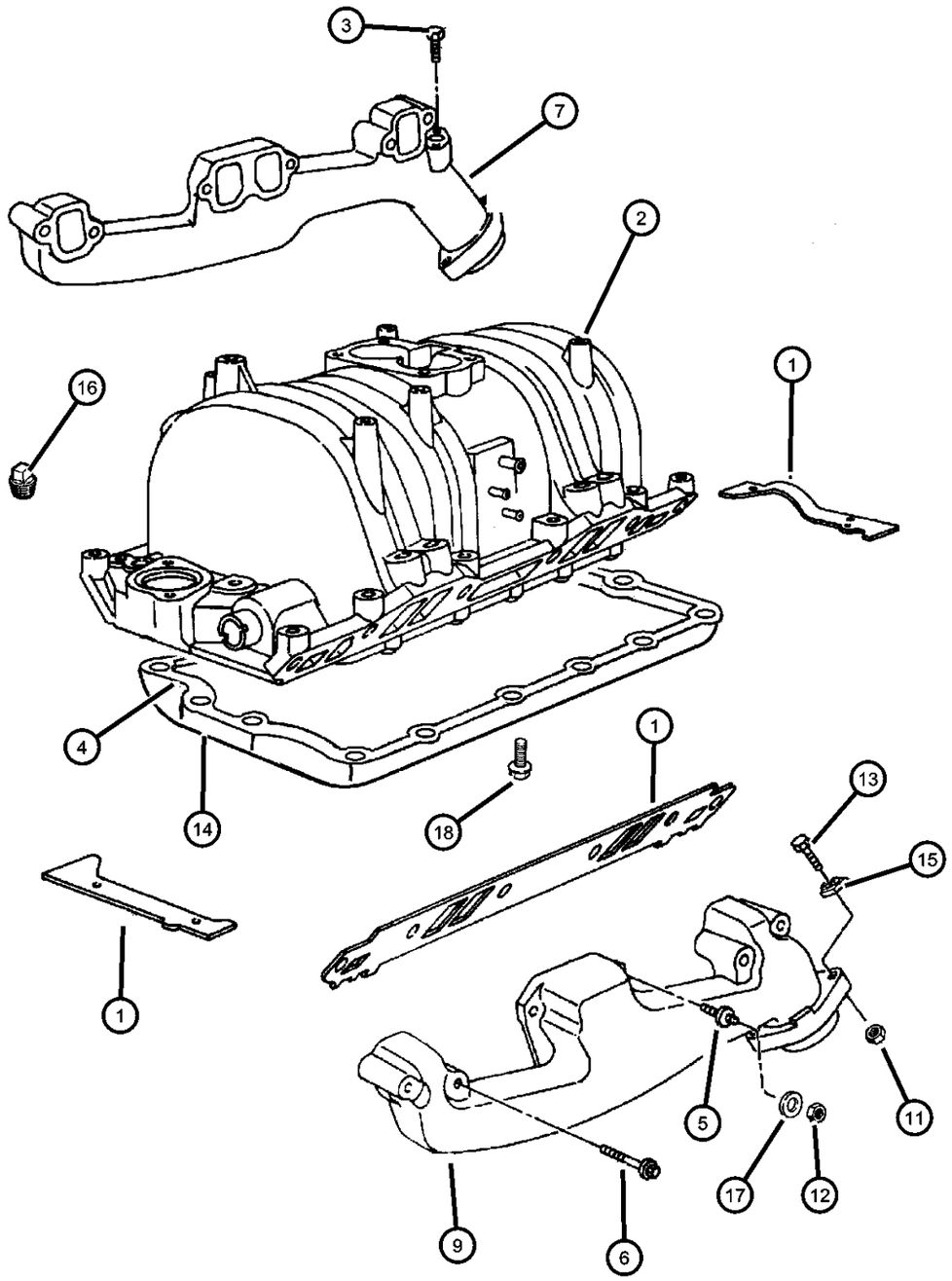

ITEM	PART NUMBER	QTY	LINE	SERIES	BODY	ENGINE	TRANS	TRIM	DESCRIPTION
Note; Sales Codes [EH0]= All 3.9L V-6 Gas Engines [EM0]= All 5.9L V-8 Gas Engines [EV0]= All 4.7L Gas Engines									
1	04897383AC	1				EM0			GASKET PACKAGE, Intake Manifold
2	04897490AC	1				EM0			MANIFOLD, Intake
3	06035967AA	12				EH0, EM0			SCREW AND WASHER, Hex Head
4	05017208AA	1				EM0			GASKET, Intake Manifold Pan
5	06034643	4				EH0, EM0			STUD, .312-18/.312-24x2.25
6	06034806	5				EM0			SCREW AND WASHER, Hex Head, .312-18x3.125
7	53030873	1				EM0			MANIFOLD, ExhaustRight
-8	57008126	1	1			EM0			SHIELD, Engine Mount, Exhaust Manifold, Right
9	53010189	1				EM0			MANIFOLD, ExhaustLeft
-10	57008125AB	1	1			EH0, EM0			SHIELD, Engine Mount, Exhaust Manifold, Left
11	00154732	1				EH0, EM0			NUT, Hex, .375-16
12	00115729	4				EM0			NUT, Hex, .312 x 24
13	06035375	4				EH0, EM0, EV0			BOLT, Hex Head, .375-16x2.50
14	53006617	1				EM0			PAN, Intake Manifold
15	04004001	4				EH0, EM0, EV0			RETAINER, Exhaust Pipe to Manifold
16	04004001	4							PLUG, Hex Socket, 3/8-18NPT, (NOT SERVICED)
17	53010091	4				EH0, EM0			CLAMP, Exhaust Manifold
18	06034583	15				EM0			SCREW AND WASHER, Hex Head, .25-20x.892

DAKOTA (AN)

SERIES	LINE	BODY	ENGINE	TRANSMISSION
L = Dakota (All)	1 = Dakota 2WD 5 = Dakota 4WD	61 = Regular Cab (112 WB) 31 = Club Cab (131 WB) 84 = Quad Cab (131 WB)	EPE = 2.5L 4 Cylinder EHC = 3.9L 6 Cylinder EML = 5.0L 8 Cylinder EVA = 4.7L Magnum V8 EP0 = All 2.5L EH0 = All 3.9L EM0 = All 5.9L EV0 = All 4.7L	DGK = 4 Speed Automatic 42RE DGT = 4 Speed Automatic 46RE DDC = 5 Speed HD Manual DDK = 5 Speed HD Manual DG4 = Multispeed Automatic 45RFE DG0 = All Automatic Transmissions DBB = All Manual Transmissions

Crankcase Ventilation, 5.9L [EML]
Figure 5.9L-910

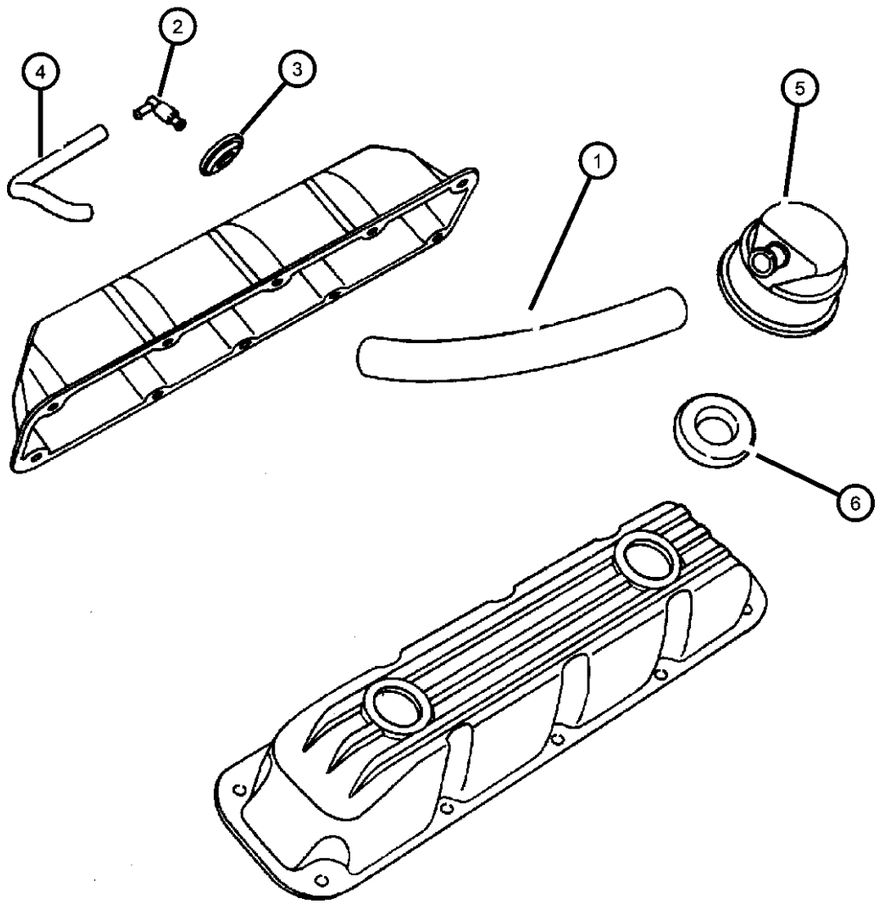

ITEM	PART NUMBER	QTY	LINE	SERIES	BODY	ENGINE	TRANS	TRIM	DESCRIPTION

Note; Sales Codes
[EH0]= All 3.9L V-6 Gas Engines
[EM0]= All 5.9L V-8 Engines

1	53031136AD	1				EH0, EM0			HOSE, Crankcase Vent
2	53031135	1				EM0			VALVE, Crankcase Vent
3	53030017	1				EH0, EM0			GROMMET, Crankcase Vent
4	53008675AD	1				EH0, EM0			TUBE, PCV Valve
5	53030497	1				EH0, EM0			FITTING, Crankcase Vent Tube
6	02946079	1				EM0			GROMMET, Crankcase Vent

DAKOTA (AN)

SERIES	LINE	BODY	ENGINE	TRANSMISSION
L = Dakota (All)	1 = Dakota 2WD	61 = Regular Cab (112 WB)	EPE = 2.5L 4 Cylinder	DGK = 4 Speed Automatic 42RE
	5 = Dakota 4WD	31 = Club Cab (131 WB)	EHC = 3.9L 6 Cylinder	DGT = 4 Speed Automatic 46RE
		84 = Quad Cab (131 WB)	EML = 5.0L 8 Cylinder	DDC = 5 Speed HD Manual
			EVA = 4.7L Magnum V8	DDK = 5 Speed HD Manual
			EP0 = All 2.5L	DG4 = Multispeed Automatic 45RFE
			EH0 = All 3.9L	DG0 = All Automatic Transmissions
			EM0 = All 5.9L	DBB = All Manual Transmissions
			EV0 = All 4.7L	

Group - 11

Exhaust

011-100 Exhaust System 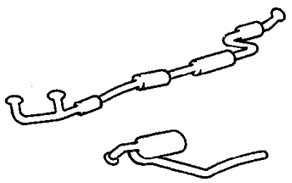	**011-200** Heat Shields 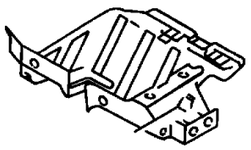		

Group - 11 Exhaust

Illustration Title — Group-Fig. No.

Exhaust System

Exhaust System, 2.5L [EPE] ..... Fig. 11 - 110
Exhaust System, 3.9L [EHC], 4.7L [EVA], 5.9L [EML] ..... Fig. 11 - 120

Heat Shields

Heat Shields, All Engines ..... Fig. 11 - 210

Exhaust System, 2.5L [EPE]
Figure 11-110

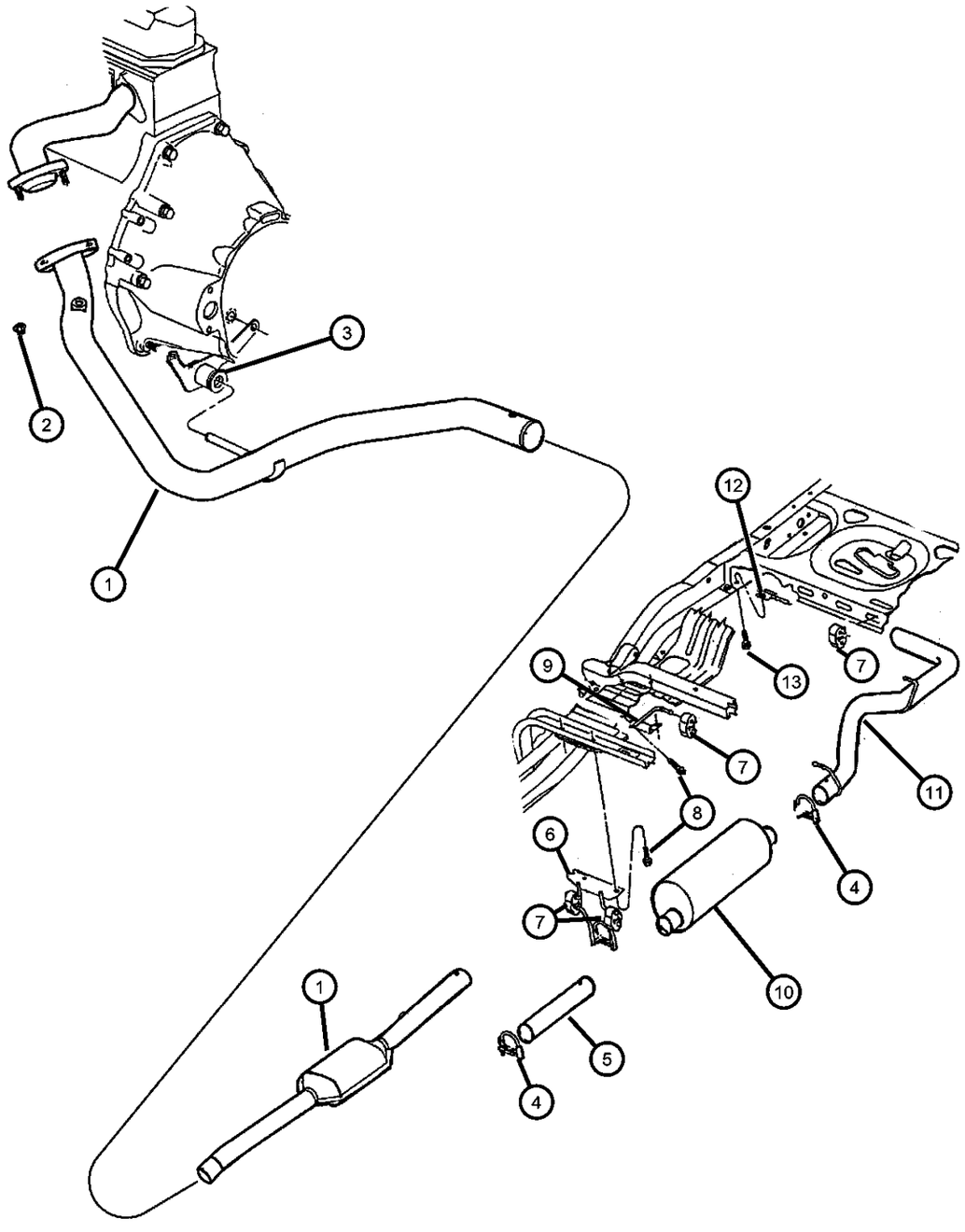

ITEM	PART NUMBER	QTY	LINE	SERIES	BODY	ENGINE	TRANS	TRIM	DESCRIPTION
Note; Sales Code [EH0]= All 3.9L V-6 Gas Engines [EM0]= All 5.9L V-8 Gas Engines [EP0]= All 2.5L, 4 Cylinder Gas Engines [EV0]= All 4.7L Gas Engines									
1	52103598AD	1	1			EP0			CONVERTER, Catalytic, U.S. 50 States, Export
2	J4005142	2				EP0			NUT, Hex Flange Lock
3	J4005142	2							BRACKET, Exhaust Hanger, Serviced In Item 1, (NOT SERVICED)
4	04004445	1							CLAMP, Exhaust
5									PIPE, Exhaust
	52103433AA	1			61				
	E0052293AA								Mopar V-Line Alternative Part Exhaust Extension Pipe
	52103435AA	1			31				
	E0053427AA								Mopar V-Line Alternative Part Exhaust Extension Pipe
6	52103242AB	1			31, 61	EH0, EM0, EP0, EV0			HANGER, Muffler
7	52017607	2							INSULATOR, Exhaust
	E0036369								Mopar V-Line Alternative Part
8	06102153AA	2			31, 61				SCREW, Tapping, M8x20
9	52019493	1			31, 61				HANGER, Muffler
10	52022122AB	1	1		31, 61	EP0			MUFFLER, Exhaust
	E0040251AA								Mopar V-Line Alternative Part Muffler
11	52022001AC	1	1		31, 61	EH0, EP0, EV0			TAILPIPE, Exhaust
12	52103037	1				EH0, EP0, EV0			BRACKET, Tailpipe
13	06100304	2	1						BOLT AND CONED WASHER, Hex Head, M8x25x20

DAKOTA (AN)

SERIES	LINE	BODY	ENGINE	TRANSMISSION
L = Dakota (All)	1 = Dakota 2WD 5 = Dakota 4WD	61 = Regular Cab (112 WB) 31 = Club Cab (131 WB) 84 = Quad Cab (131 WB)	EPE = 2.5L 4 Cylinder EHC = 3.9L 6 Cylinder EML = 5.0L 8 Cylinder EVA = 4.7L Magnum V8 EP0 = All 2.5L EH0 = All 3.9L EM0 = All 5.9L EV0 = All 4.7L	DGK = 4 Speed Automatic 42RE DGT = 4 Speed Automatic 46RE DDC = 5 Speed HD Manual DDK = 5 Speed HD Manual DG4 = Multispeed Automatic 45RFE DG0 = All Automatic Transmissions DBB = All Manual Transmissions

Exhaust System, 3.9L [EHC], 4.7L [EVA], 5.9L [EML]
Figure 11-120

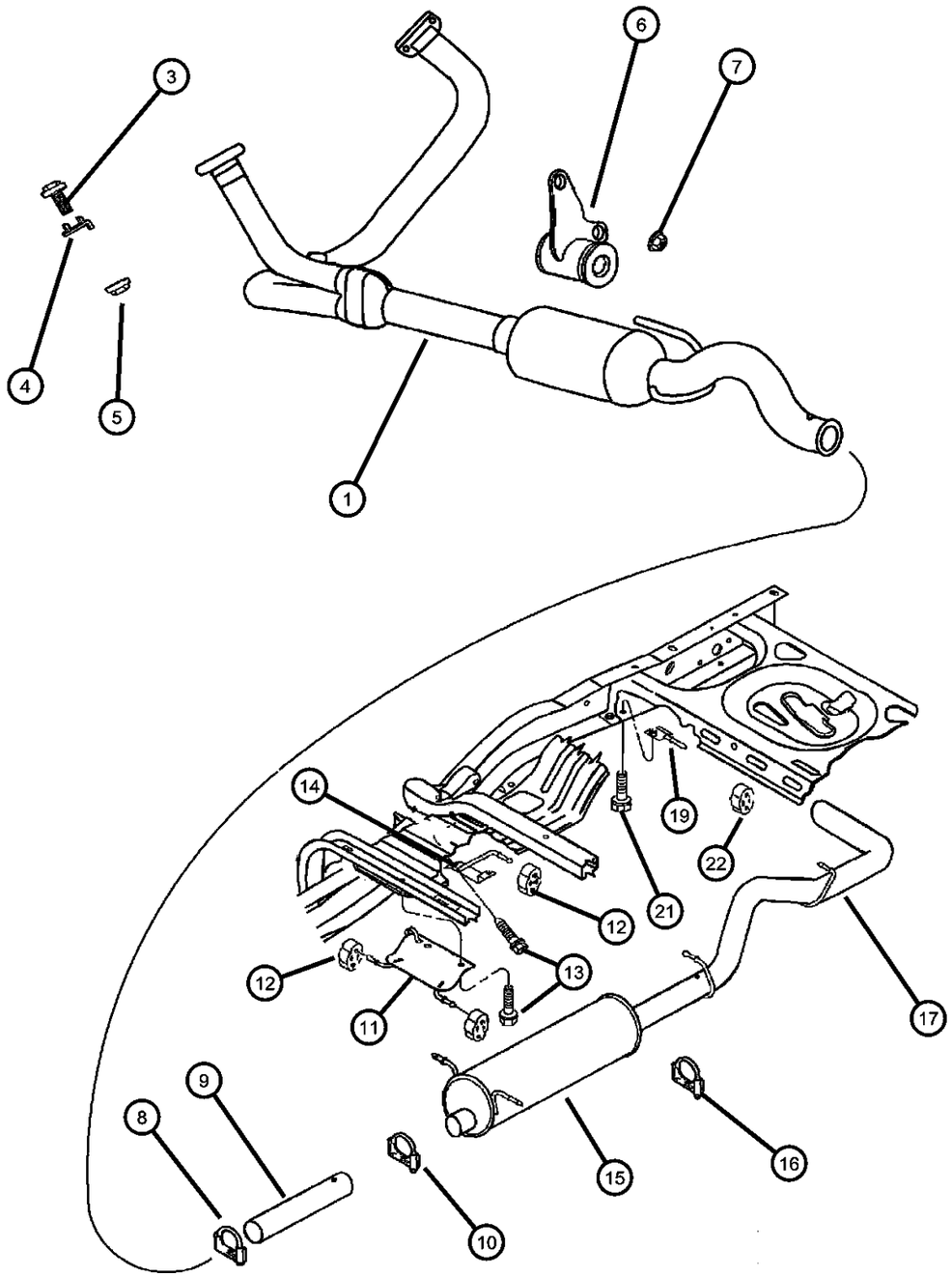

ITEM	PART NUMBER	QTY	LINE	SERIES	BODY	ENGINE	TRANS	TRIM	DESCRIPTION
Note; Sales Codes [DHT]= Transfer Case Electric Shift Part Time [DHV]= Transfer Case Electric Shift Full Time [EH0]= All 3.9L V-6 Gas Engines [EM0]= All 5.9L V-8 Gas Engines [EP0]= All 2.5L 4 Cylinder Gas Engines [EV0]= All 4.7L Gas Engines									
1									CONVERTER, Catalytic
	52103252AB	1	1		84	EH0			Federal
	52103253AC	1	5		84	EH0			Federal
	52103254AC	1	1		84	EV0			U.S. 50 States
	52103255AD	1	5		84	EV0			
	52103267AB	1	1		84	EM0			Federal
	52103268AC	1	5		84	EM0			Federal
	52103296AE	1	5		84	EV0			NAE
		1	5		31, 61	EV0			
	52103480AB	1	1		31, 61	EH0			U.S. 50 States
		1	1		84	EH0			California
	52103481AB	1	5		31, 61	EH0			U.S. 50 States
		1	5		84	EH0			California
	52103482AB	1	1		31, 61	EM0			U.S. 50 States
		1	1		84	EM0			California
	52103483AB	1	5		31, 61	EM0			U.S. 50 States
		1	5		84	EM0			California
	52103527AC	1	1		31, 61	EV0			U.S. 50 States
	52103527AD	1	1		84	EV0			NAE
-2									PIPE, Exhaust
	52103257AB	1	1			EH0			Leaded Fuel
	52103258AC	1	5			EH0			Leaded Fuel
3	06035375	4				EH0, EM0, EV0			BOLT, Hex Head, .375-16x2.50
4	04004001	4				EH0, EM0, EV0			RETAINER, Exhaust Pipe to Manifold
5	06025011	4				EH0, EM0, EV0			NUT AND WASHER, Hex Nut-Coned Washer, .375-16
6									BRACKET, Exhaust Hanger

DAKOTA (AN)

SERIES	LINE	BODY	ENGINE	TRANSMISSION
L = Dakota (All)	1 = Dakota 2WD 5 = Dakota 4WD	61 = Regular Cab (112 WB) 31 = Club Cab (131 WB) 84 = Quad Cab (131 WB)	EPE = 2.5L 4 Cylinder EHC = 3.9L 6 Cylinder EML = 5.0L 8 Cylinder EVA = 4.7L Magnum V8 EP0 = All 2.5L EH0 = All 3.9L EM0 = All 5.9L EV0 = All 4.7L	DGK = 4 Speed Automatic 42RE DGT = 4 Speed Automatic 46RE DDC = 5 Speed HD Manual DDK = 5 Speed HD Manual DG4 = Multispeed Automatic 45RFE DG0 = All Automatic Transmissions DBB = All Manual Transmissions

Exhaust System, 3.9L [EHC], 4.7L [EVA], 5.9L [EML]
Figure 11-120

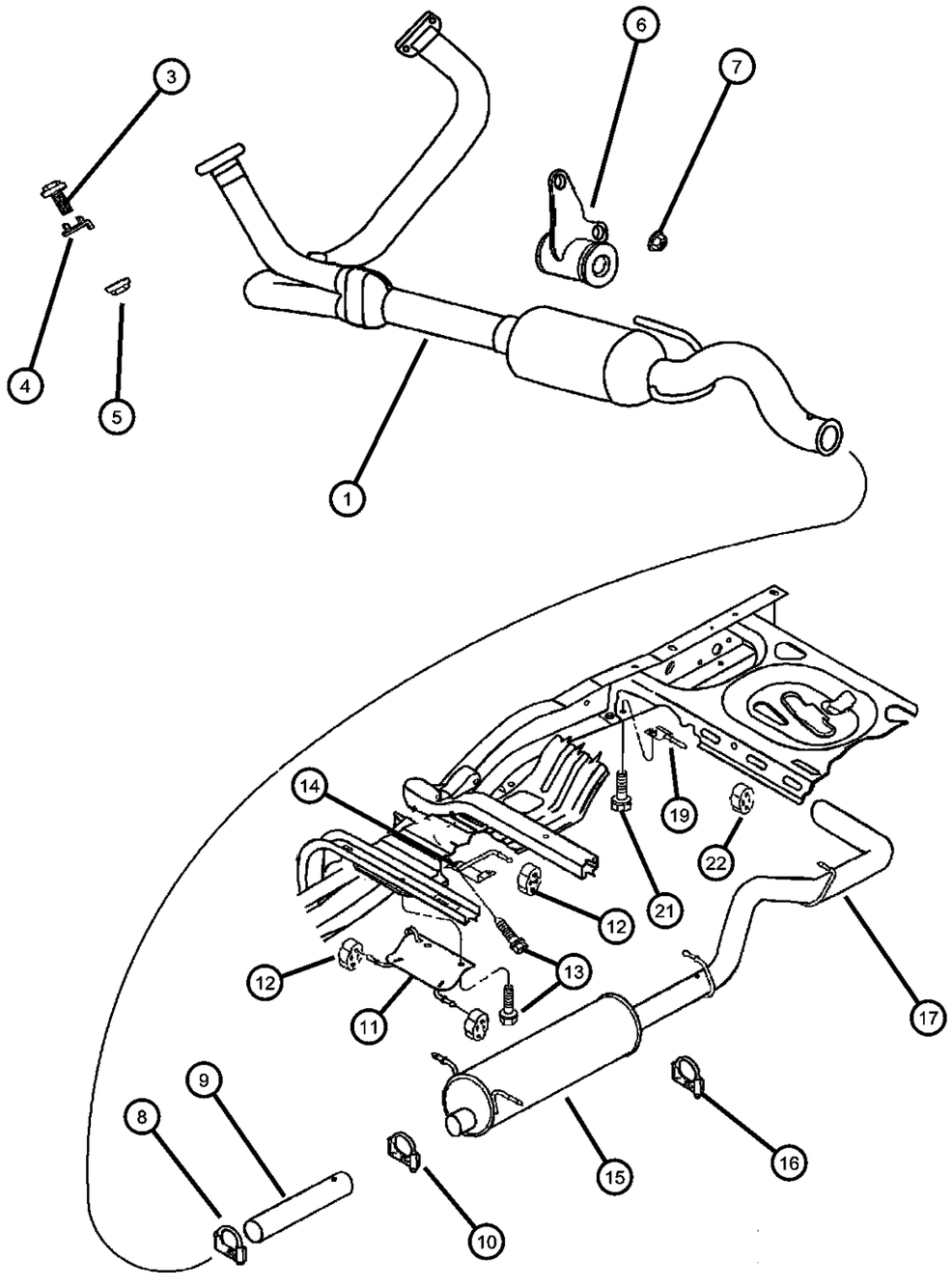

ITEM	PART NUMBER	QTY	LINE	SERIES	BODY	ENGINE	TRANS	TRIM	DESCRIPTION
	52103307AB	1	5						With Sales Code [DHV]
	52103308AB	1	5						With Sales Code [DHT]
7	06502337	2							NUT, M10x1.5
8	04004445	1							CLAMP, Exhaust
9									PIPE, Exhaust
	52103325AA	1			84				
	E0052292AA								Mopar V-Line Alternative Part Exhaust Extension Pipe
	52103433AA	1			61				
	E0052293AA								Mopar V-Line Alternative Part Exhaust Extension Pipe
	52103435AA	1			31				
	E0053427AA								Mopar V-Line Alternative Part Exhaust Extension Pipe
10	04004445	1				EH0, EM0, EV0			CLAMP, Exhaust
11									HANGER, Muffler
	52103242AB	1			31, 61	EH0, EM0, EP0, EV0			
	52103265AB	1			84				
12	52017607	2							INSULATOR, Exhaust
	E0036369								Mopar V-Line Alternative Part
13	06102153AA	2							SCREW, Tapping, M8x20
14									HANGER, Muffler
	52019493	1			31, 61				
	52103245AA	1			84				
15									MUFFLER, Exhaust
	52103247AA	1			31, 61	EH0			
	E0019322								Dynomax Cat Back Single Exhaust Regular Cab Short Bed 2WD
	E0019323								Dynomax Cat Back Single Exhaust Regular Cab Short Bed 4WD
	E0019325								Dynomax Cat Back Single Exhaust Extended Cab Short Bed 2WD

DAKOTA (AN)

SERIES	LINE	BODY	ENGINE	TRANSMISSION
L = Dakota (All)	1 = Dakota 2WD 5 = Dakota 4WD	61 = Regular Cab (112 WB) 31 = Club Cab (131 WB) 84 = Quad Cab (131 WB)	EPE = 2.5L 4 Cylinder EHC = 3.9L 6 Cylinder EML = 5.0L 8 Cylinder EVA = 4.7L Magnum V8 EP0 = All 2.5L EH0 = All 3.9L EM0 = All 5.9L EV0 = All 4.7L	DGK = 4 Speed Automatic 42RE DGT = 4 Speed Automatic 46RE DDC = 5 Speed HD Manual DDK = 5 Speed HD Manual DG4 = Multispeed Automatic 45RFE DG0 = All Automatic Transmissions DBB = All Manual Transmissions

Exhaust System, 3.9L [EHC], 4.7L [EVA], 5.9L [EML]
Figure 11-120

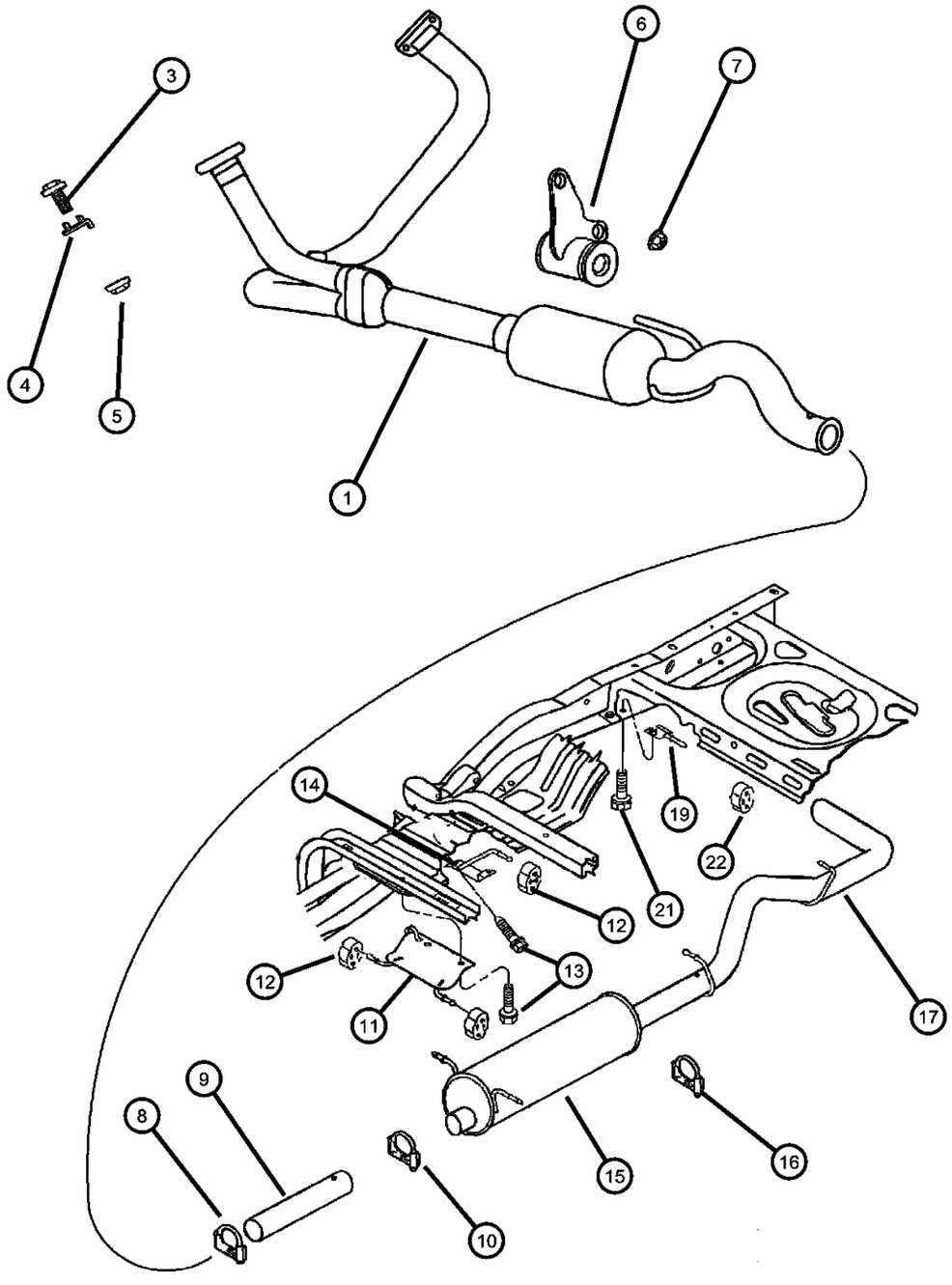

ITEM	PART NUMBER	QTY	LINE	SERIES	BODY	ENGINE	TRANS	TRIM	DESCRIPTION
	E0019324								Dynomax Cat Back Single Exhaust Extended Cab Short Bed 4WD
	E0019417								Dynomax Cat Back Dual Exhaust Short Bed Regular Cab
	E0040245AA								Mopar V-Line Alternative Part Muffler
	52103248AA	1			31, 61	EV0			
	E0019322								Dynomax Cat Back Single Exhaust Regular Cab Short Bed 2WD
	E0019323								Dynomax Cat Back Single Exhaust Regular Cab Short Bed 4WD
	E0019325								Dynomax Cat Back Single Exhaust Extended Cab Short Bed 2WD
	E0019324								Dynomax Cat Back Single Exhaust Extended Cab Short Bed 4WD
	E0019417								Dynomax Cat Back Dual Exhaust Short Bed Regular Cab
	E0040246AA								Mopar V-Line Alternative Part Muffler
	52103249AB	1			84	EH0			
	E0019424								Dynomax Cat Back Dual Exhaust Short Bed Quad Cab
	E0040244AA								Mopar V-Line Alternative Part Muffler
	52103270AB	1			84	EM0, EV0			
	E0019424								Dynomax Cat Back Dual Exhaust Short Bed Quad Cab
	E0040248AA								Mopar V-Line Alternative Part Muffler
	52103323AA	1	1		31, 61	EM0			
	E0019322								Dynomax Cat Back Single Exhaust Regular Cab Short Bed 2WD
	E0019323								Dynomax Cat Back Single Exhaust Regular Cab Short Bed 4WD
	E0019325								Dynomax Cat Back Single Exhaust Extended Cab Short Bed 2WD

DAKOTA (AN)

SERIES	LINE	BODY	ENGINE	TRANSMISSION
L = Dakota (All)	1 = Dakota 2WD 5 = Dakota 4WD	61 = Regular Cab (112 WB) 31 = Club Cab (131 WB) 84 = Quad Cab (131 WB)	EPE = 2.5L 4 Cylinder EHC = 3.9L 6 Cylinder EML = 5.0L 8 Cylinder EVA = 4.7L Magnum V8 EP0 = All 2.5L EH0 = All 3.9L EM0 = All 5.9L EV0 = All 4.7L	DGK = 4 Speed Automatic 42RE DGT = 4 Speed Automatic 46RE DDC = 5 Speed HD Manual DDK = 5 Speed HD Manual DG4 = Multispeed Automatic 45RFE DG0 = All Automatic Transmissions DBB = All Manual Transmissions

Exhaust System, 3.9L [EHC], 4.7L [EVA], 5.9L [EML]
Figure 11-120

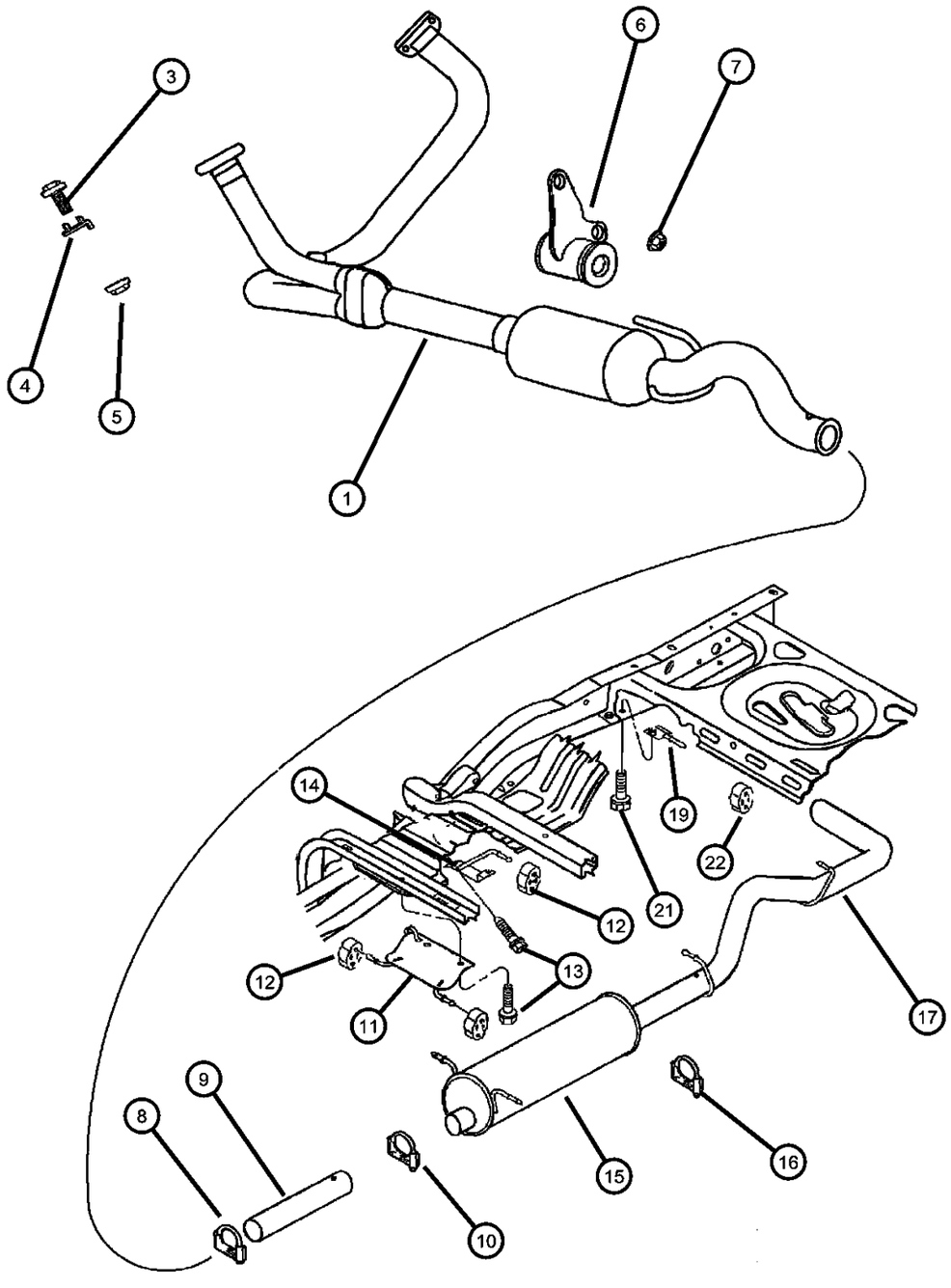

ITEM	PART NUMBER	QTY	LINE	SERIES	BODY	ENGINE	TRANS	TRIM	DESCRIPTION
	E0019324								Dynomax Cat Back Single Exhaust Extended Cab Short Bed 4WD
	E0019423								Dynomax Cat Back Dual Exhaust Short Bed Extended Cab
16	04004445	1							CLAMP, Exhaust
17									TAILPIPE, Exhaust
	52022001AC	1	1		31, 61	EH0, EP0, EV0			
	52103040AC	1	5		31, 61	EH0, EV0			
	E0054418AA								Mopar V-Line Alternative Part Tailpipe
	52103250AB	1	1		84				
	E0055294AA								Mopar V-Line Alternative Part Resonator
	52103251AB	1	5		84				
	E0054417AA								Mopar V-Line Alternative Part Tailpipe
-18	52103262AB	1	1		31, 61	EM0			PIPE, Tail
19									BRACKET, Tailpipe
	52103037	1				EH0, EP0, EV0			
		1				EM0			Model 84 Only
-20	52103064	1	1		31, 61	EM0			BRACKET, Exhaust Pipe
21	06100304	2	1						BOLT AND CONED WASHER, Hex Head, M8x25x20
22									INSULATOR, Exhaust
	52017607	1			84				
	E0036369								Mopar V-Line Alternative Part
		1			31, 61				
	E0036369								Mopar V-Line Alternative Part
-23	04616750	2	1		31, 61	EM0			ISOLATOR, Exhaust Support

DAKOTA (AN)

SERIES	LINE	BODY	ENGINE	TRANSMISSION
L = Dakota (All)	1 = Dakota 2WD 5 = Dakota 4WD	61 = Regular Cab (112 WB) 31 = Club Cab (131 WB) 84 = Quad Cab (131 WB)	EPE = 2.5L 4 Cylinder EHC = 3.9L 6 Cylinder EML = 5.0L 8 Cylinder EVA = 4.7L Magnum V8 EP0 = All 2.5L EH0 = All 3.9L EM0 = All 5.9L EV0 = All 4.7L	DGK = 4 Speed Automatic 42RE DGT = 4 Speed Automatic 46RE DDC = 5 Speed HD Manual DDK = 5 Speed HD Manual DG4 = Multispeed Automatic 45RFE DG0 = All Automatic Transmissions DBB = All Manual Transmissions

Heat Shields, All Engines
Figure 11-210

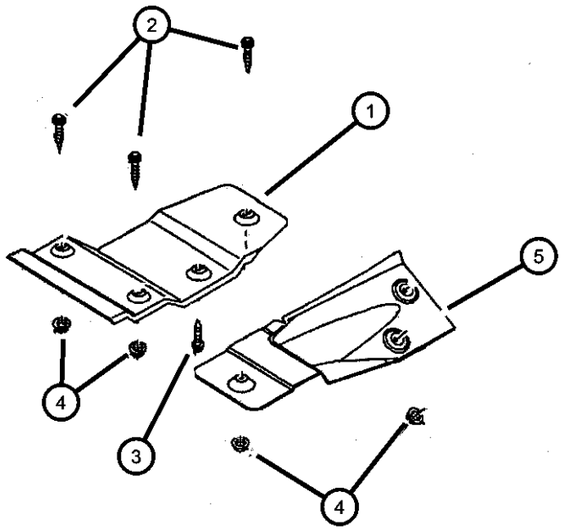

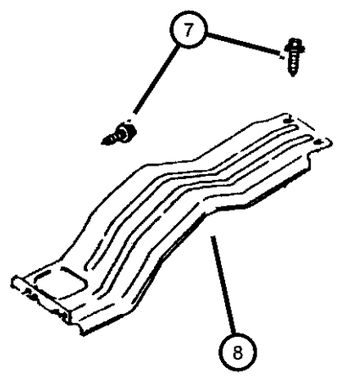

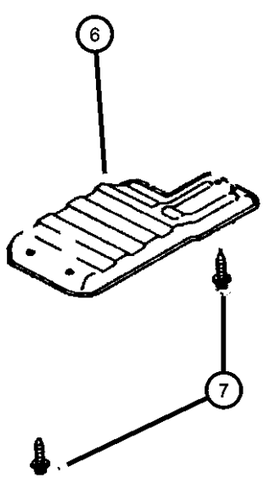

ITEM	PART NUMBER	QTY	LINE	SERIES	BODY	ENGINE	TRANS	TRIM	DESCRIPTION
Note; Sales Codes [EH0]= All 3.9L V-6 Gas Engines [EM0]= All 5.9L V-8 Gas Engines [EV0]= All 4.7L Gas Engines									
1									SHIELD, Heat
	55255815	1			61				Floor Pan and Catalytic Converter
	55255816AB	1			31				Floor Pan and Catalytic Converter
2	55255816AB	1							SCREW, Hex Flange Head, .25-20x.875, (NOT SERVICED),
3									SCREW
	06036237AA	1			61				
		3			31, 84				
4		3							NUT, .25-20, (NOT SERVICED)
5									SHIELD, Heat
	55257259AB	1			84				Floor Pan Middle and Catalytic Converter
	55257300AC	1							Floor Pan Front
6									SHIELD, Heat
	04266926	1			31, 61				Muffler
	52104425AC	1			84				Muffler
7	52104425AC	1							SCREW, Tapping, M8x20, (NOT SERVICED),
8	52019901	1			31, 61	EH0, EM0, EV0			SHIELD, Heat

DAKOTA (AN)

SERIES	LINE	BODY	ENGINE	TRANSMISSION
L = Dakota (All)	1 = Dakota 2WD	61 = Regular Cab (112 WB)	EPE = 2.5L 4 Cylinder	DGK = 4 Speed Automatic 42RE
	5 = Dakota 4WD	31 = Club Cab (131 WB)	EHC = 3.9L 6 Cylinder	DGT = 4 Speed Automatic 46RE
		84 = Quad Cab (131 WB)	EML = 5.0L 8 Cylinder	DDC = 5 Speed HD Manual
			EVA = 4.7L Magnum V8	DDK = 5 Speed HD Manual
			EP0 = All 2.5L	DG4 = Multispeed Automatic 45RFE
			EH0 = All 3.9L	DG0 = All Automatic Transmissions
			EM0 = All 5.9L	DBB = All Manual Transmissions
			EV0 = All 4.7L	

Group - 13

Frames and Bumpers

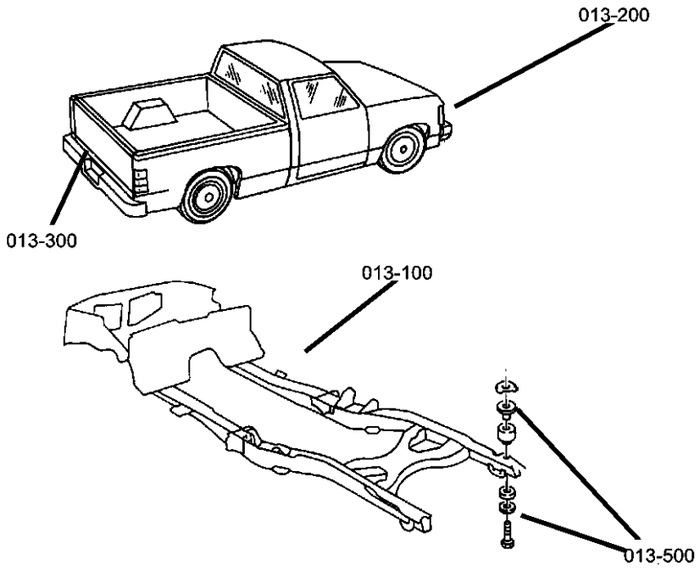

013-100 Frames	013-200 Front Bumper and Fascia	013-300 Rear Bumper and Fascia	013-500 Body Hold Down
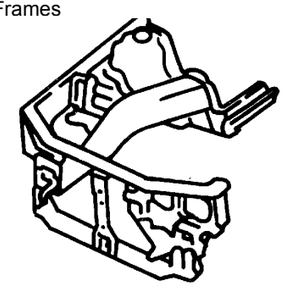	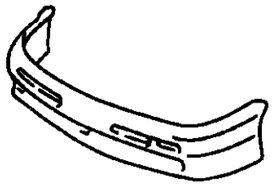		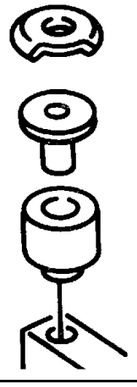

Group - 13 Frames and Bumpers

Illustration Title — Group-Fig. No.

Frames
Frame ..... Fig. 13 - 110

Front Bumper and Fascia
Bumper, Front ..... Fig. 13 - 210

Rear Bumper and Fascia
Bumper, Rear ..... Fig. 13 - 310

Body Hold Down
Body Hold Down ..... Fig. 13 - 510

Frame
Figure 13-110

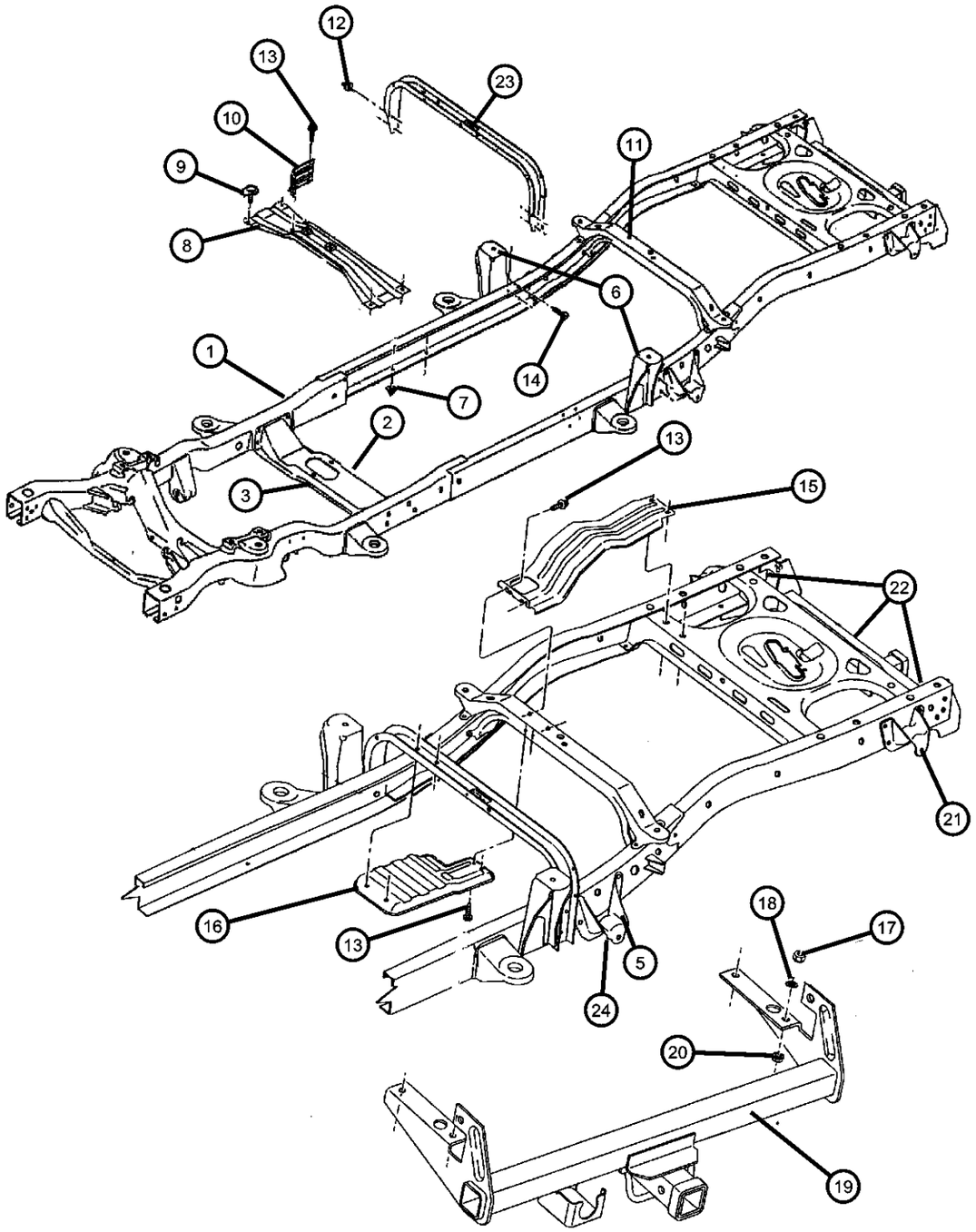

ITEM	PART NUMBER	QTY	LINE	SERIES	BODY	ENGINE	TRANS	TRIM	DESCRIPTION
1									FRAME, Chassis
	52020401AF	1	1		84				
	52020408AI	1	5		84				
	52020409AI	1	1		31				With Manual Transmission
	52059002AJ	1	1		61				
	52059004AK	1	1		31				With Auto Transmission
	52059005AL	1	5		61				
	52059007AL	1	5		31				
2									CROSSMEMBER, Front Support
	52058736AB	1	1		84				
		1	1		31				
		1	1		61				
3	52020253AD	1	5						CROSSMEMBER, Transmission
-4	52020253AD	1	5						CROSSMEMBER, Transmission
5									SHACKLE, Spring
	52019880	1	1		84				Right Rear
		1	1		61				Right Rear
		1	1		31				Right Rear
		1	5		61				Right Rear
		1	5		31				Right Rear
		1	5		84				Right Rear
	52019881	1	1		84				Left Rear
		1	1		31				Left Rear
		1	1		61				Left Rear
		1	5		61				Left Rear
		1	5		31				Left Rear
		1	5		84				Left Rear
6									BRACKET, Box
	52058389	2	1		31				
		2	5		31				
		2	5		61				
		2	1		61				
7		2							NUT, (NOT SERVICED)

DAKOTA (AN)

SERIES	LINE	BODY	ENGINE	TRANSMISSION
L = Dakota (All)	1 = Dakota 2WD	61 = Regular Cab (112 WB)	EPE = 2.5L 4 Cylinder	DGK = 4 Speed Automatic 42RE
	5 = Dakota 4WD	31 = Club Cab (131 WB)	EHC = 3.9L 6 Cylinder	DGT = 4 Speed Automatic 46RE
		84 = Quad Cab (131 WB)	EML = 5.0L 8 Cylinder	DDC = 5 Speed HD Manual
			EVA = 4.7L Magnum V8	DDK = 5 Speed HD Manual
			EP0 = All 2.5L	DG4 = Multispeed Automatic 45RFE
			EH0 = All 3.9L	DG0 = All Automatic Transmissions
			EM0 = All 5.9L	DBB = All Manual Transmissions
			EV0 = All 4.7L	

AR = use ase required - = Non illustrrated part

Frame
Figure 13-110

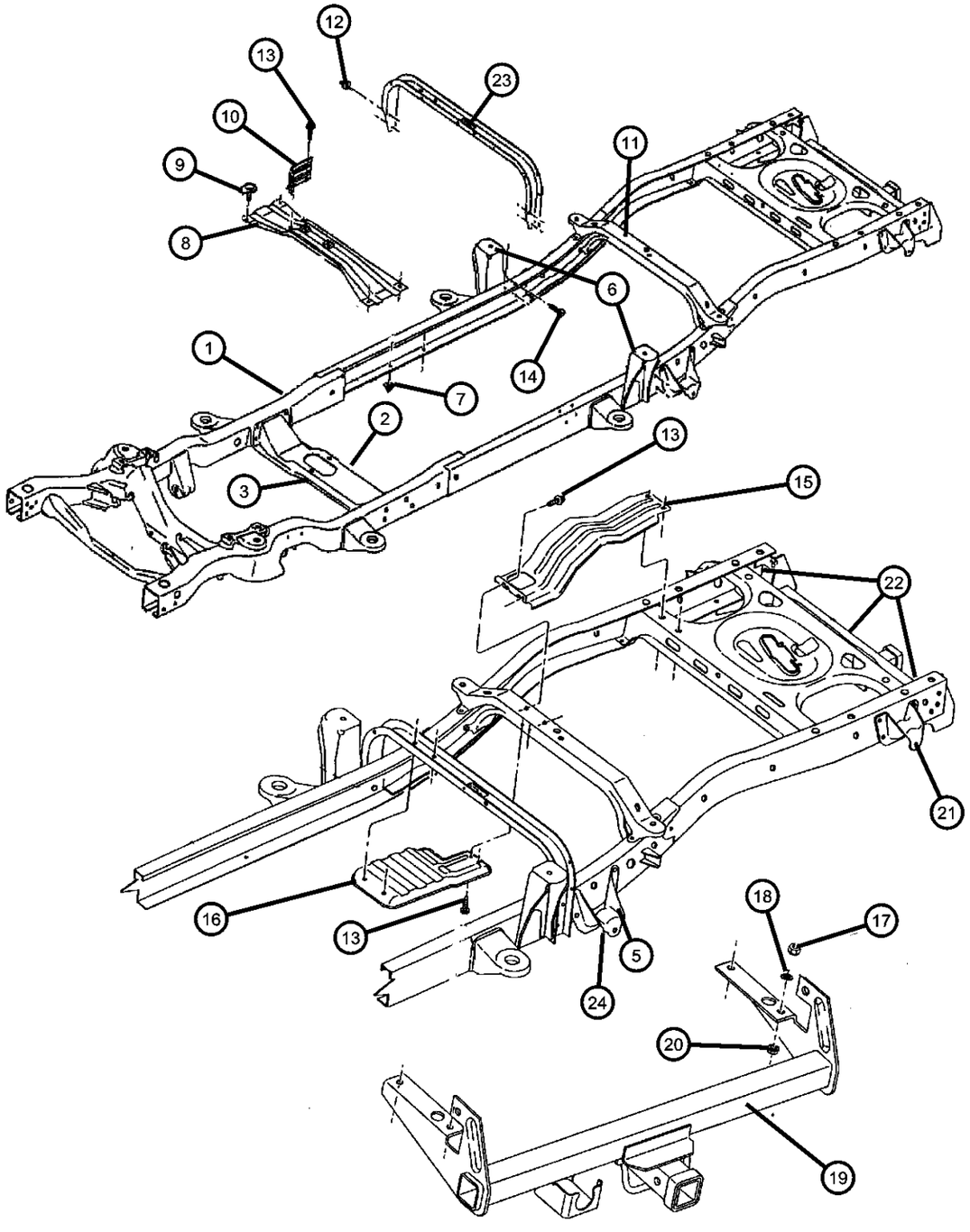

ITEM	PART NUMBER	QTY	LINE	SERIES	BODY	ENGINE	TRANS	TRIM	DESCRIPTION
8									CROSSMEMBER, Center Bearing Mount
	52020302AC	1	1		84				
	52059745	1	1		31				
9	06504677	4			84				BOLT AND RETAINER, M10X1.50X34.50
10	52019569	1	1		31				SHIELD, Heat
11									CROSSMEMBER, Fuel Tank
	52019584AC	1	1		31				
		1	5		84				
		1	1		84				
		1	5		31				
		1	5		61				
		1	1		61				
12	06502979	4							NUT AND WASHER, Hex, M10x1.5
13	06102153AA	2							SCREW, Tapping, M8x20
14	06102011	4			31, 61				BOLT, M10x1.50x25
15									SHIELD, Heat
	52019901	1			31, 61				
	52104425AC	1			84				
16	04266926	1			31, 61				SHIELD, Heat
17	06503252	3							BOLT, Hex Flange Head, M12x1.75x45
18	06101696	2	1						NUT
19									RECEIVER KIT, Trailer Tow
	82204071	1	1, 5	L	31, 61, 84				With 6500# Rating With Load Distrubution, Hitch
	82204712	1	1, 5	L	31, 61, 84				With Standard Rear Bumper
20	06100055	4							NUT AND WASHER, Hex Nut-Coned Washer, M12 x 1.75
21									BRACKET, Spring
	52019973	2	5		61				Rear
		2	5		31				Rear
		2	5		84				Rear
22									DAMPER, Mass

DAKOTA (AN)

SERIES	LINE	BODY	ENGINE	TRANSMISSION
L = Dakota (All)	1 = Dakota 2WD	61 = Regular Cab (112 WB)	EPE = 2.5L 4 Cylinder	DGK = 4 Speed Automatic 42RE
	5 = Dakota 4WD	31 = Club Cab (131 WB)	EHC = 3.9L 6 Cylinder	DGT = 4 Speed Automatic 46RE
		84 = Quad Cab (131 WB)	EML = 5.0L 8 Cylinder	DDC = 5 Speed HD Manual
			EVA = 4.7L Magnum V8	DDK = 5 Speed HD Manual
			EP0 = All 2.5L	DG4 = Multispeed Automatic 45RFE
			EH0 = All 3.9L	DG0 = All Automatic Transmissions
			EM0 = All 5.9L	DBB = All Manual Transmissions
			EV0 = All 4.7L	

Frame
Figure 13-110

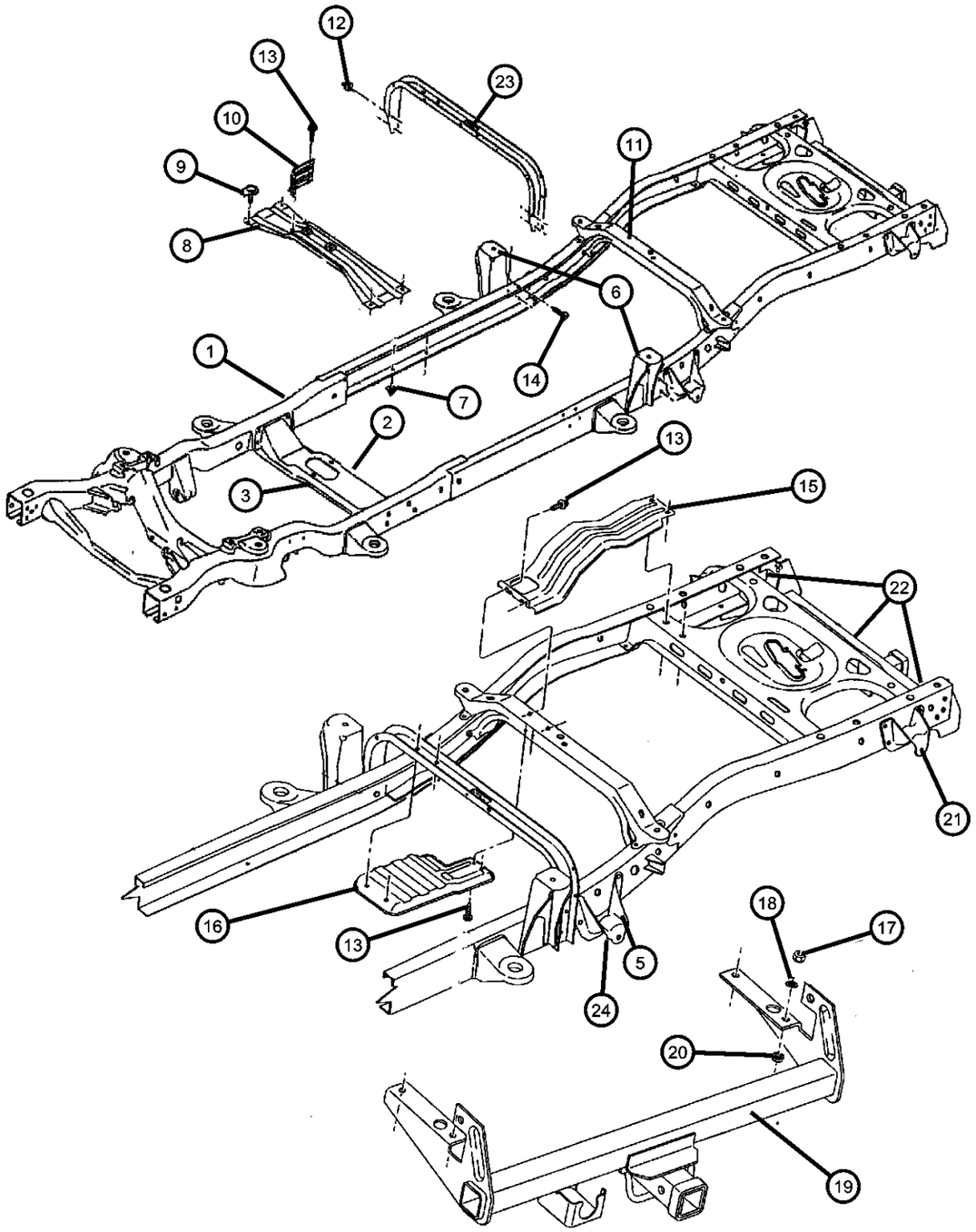

ITEM	PART NUMBER	QTY	LINE	SERIES	BODY	ENGINE	TRANS	TRIM	DESCRIPTION
	52000421AB	1			84				Damper [After 5-6-02], Rear
	52021101AB	1			84				Damper [Up To 5-6-02], Rear
	52021202AA	1	1		84				Bracket, Right
		1	5		84				Bracket, Right
	52021203AA	1	1		84				Bracket, Left
		1	5		84				Bracket, Left
23	52019657	1			31, 61				CROSSMEMBER, Fuel Tank
24									SHACKLE, Spring
	52019882	2	1		61				Front
		2	1		31				Front
		2	1		84				Front

DAKOTA (AN)

SERIES	LINE	BODY	ENGINE	TRANSMISSION
L = Dakota (All)	1 = Dakota 2WD	61 = Regular Cab (112 WB)	EPE = 2.5L 4 Cylinder	DGK = 4 Speed Automatic 42RE
	5 = Dakota 4WD	31 = Club Cab (131 WB)	EHC = 3.9L 6 Cylinder	DGT = 4 Speed Automatic 46RE
		84 = Quad Cab (131 WB)	EML = 5.0L 8 Cylinder	DDC = 5 Speed HD Manual
			EVA = 4.7L Magnum V8	DDK = 5 Speed HD Manual
			EP0 = All 2.5L	DG4 = Multispeed Automatic 45RFE
			EH0 = All 3.9L	DG0 = All Automatic Transmissions
			EM0 = All 5.9L	DBB = All Manual Transmissions
			EV0 = All 4.7L	

Bumper, Front
Figure 13-210

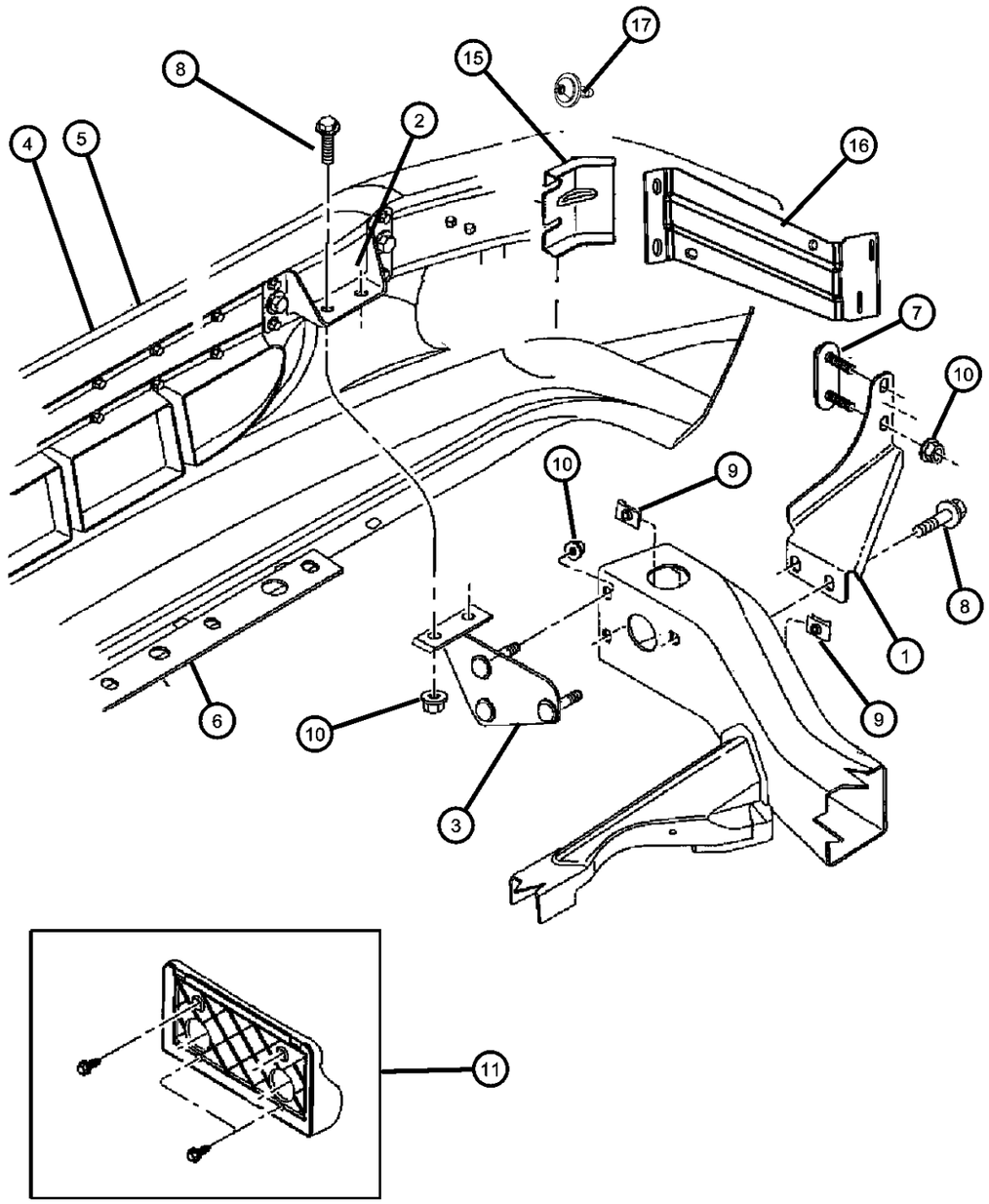

ITEM	PART NUMBER	QTY	LINE	SERIES	BODY	ENGINE	TRANS	TRIM	DESCRIPTION
Note: Sales Code MBA = Black Painted Upper, Body Color Lower									
Note: Sales Code MBB = Bright Upper, Body Color Lower									
Note: Sales Code MBP = Body Color Upper and Lower									
1									BRACKET, Bumper to Frame Rail
	55255026AC	1							Right
	55255027AC	1							Left
2									BRACKET, Front Bumper
	55076529	1							Inner Mounting, Left
	55076528	1							Inner Mounting, Right
3									BRACKET, Bumper
	55077202AB	1							Right
	55077203AA	1							Left
4									BUMPER, Front
	55077256AC	1							Beam
	55255844AB	1							Bright
5									FASCIA, Front
	05073022AB	1							[MBA], Without Fog Lamps
	0UH50DX8AA	1							[XP], [MBP], With Fog Lamps
	05073221AA	1							[MBA], With Fog Lamps
	05086491AA	1							[MCE,ML1], Without Fog Lamps
	0UH50GW7AA	1							[W7], [MBP], With Fog Lamps
	0UH50PR4AA	1							[R4], [MBP], With Fog Lamps
	0UH50ZBJAA	1							[BJ], [MBP], With Fog Lamps
	0UH50WS-BAA	1							[SB], [MBP], With Fog Lamps
		1							[ML1 + LNJ], With Fog Lamps
	0UH50ZDRAA	1							[DR], [MBP], With Fog Lamps
	55076531AC	1							[MBB], Chrome Bumper, with Fog Lamps
	55076871AC	1							[MBB], Chrome Bumper, without Fog Lamps
6	55076409AB	1							PANEL, Front Facsia
7	06504144	1							BOLT AND RETAINER, M12X1.75X35.00
8	06504531	4							BOLT, Hex Flange Head, M12x1.75x30

DAKOTA (AN)

SERIES	LINE	BODY	ENGINE	TRANSMISSION
L = Dakota (All)	1 = Dakota 2WD	61 = Regular Cab (112 WB)	EPE = 2.5L 4 Cylinder	DGK = 4 Speed Automatic 42RE
	5 = Dakota 4WD	31 = Club Cab (131 WB)	EHC = 3.9L 6 Cylinder	DGT = 4 Speed Automatic 46RE
		84 = Quad Cab (131 WB)	EML = 5.0L 8 Cylinder	DDC = 5 Speed HD Manual
			EVA = 4.7L Magnum V8	DDK = 5 Speed HD Manual
			EP0 = All 2.5L	DG4 = Multispeed Automatic 45RFE
			EH0 = All 3.9L	DG0 = All Automatic Transmissions
			EM0 = All 5.9L	DBB = All Manual Transmissions
			EV0 = All 4.7L	

Bumper, Front
Figure 13-210

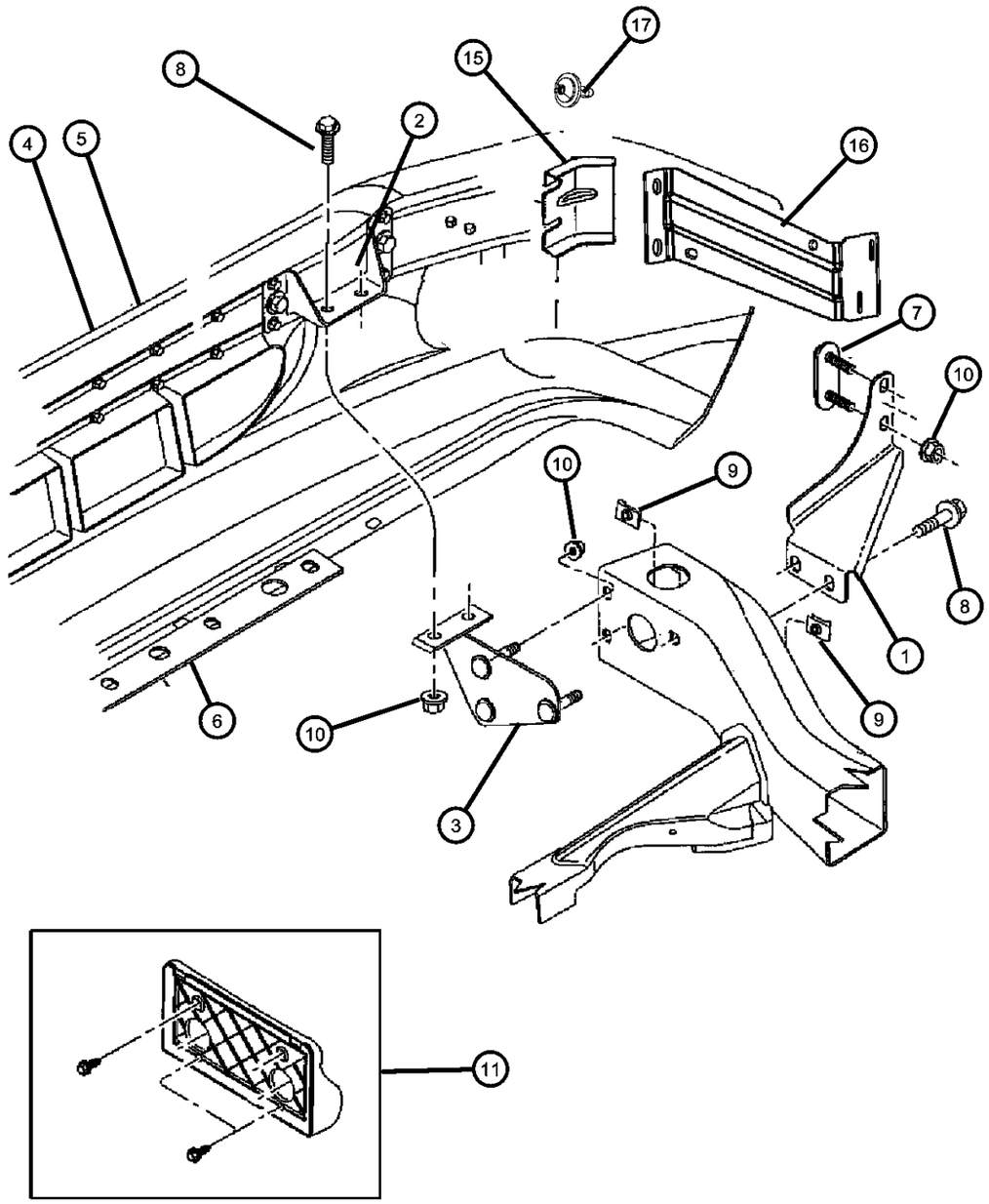

ITEM	PART NUMBER	QTY	LINE	SERIES	BODY	ENGINE	TRANS	TRIM	DESCRIPTION
9	06504814AA	4							NUT
10	06100055	4							NUT AND WASHER, Hex Nut-Coned Washer, M12 x 1.75
11	55076597AC	1							LICENSE PLATE KIT
-12									BRACKET, Side
	55077270AA	1							Right
	55077271AA	1							Left
-13	05015852AA	2							REINFORCEMENT AND NUT
-14	06506615AA	6							SCREW, M6x1x20
15	55076530AB	2							BRACKET, Front Bumper, Outer Mounting
16									BRACKET, Bumper Face Support
	55077274AC	1							Right
	55077275AC	1							Left
17	06506615AA	6							SCREW, M6x1x20, Fascia to Bracket Bumper Face Support

DAKOTA (AN)

SERIES	LINE	BODY	ENGINE	TRANSMISSION
L = Dakota (All)	1 = Dakota 2WD	61 = Regular Cab (112 WB)	EPE = 2.5L 4 Cylinder	DGK = 4 Speed Automatic 42RE
	5 = Dakota 4WD	31 = Club Cab (131 WB)	EHC = 3.9L 6 Cylinder	DGT = 4 Speed Automatic 46RE
		84 = Quad Cab (131 WB)	EML = 5.0L 8 Cylinder	DDC = 5 Speed HD Manual
			EVA = 4.7L Magnum V8	DDK = 5 Speed HD Manual
			EP0 = All 2.5L	DG4 = Multispeed Automatic 45RFE
			EH0 = All 3.9L	DG0 = All Automatic Transmissions
			EM0 = All 5.9L	DBB = All Manual Transmissions
			EV0 = All 4.7L	

Bumper, Rear
Figure 13-310

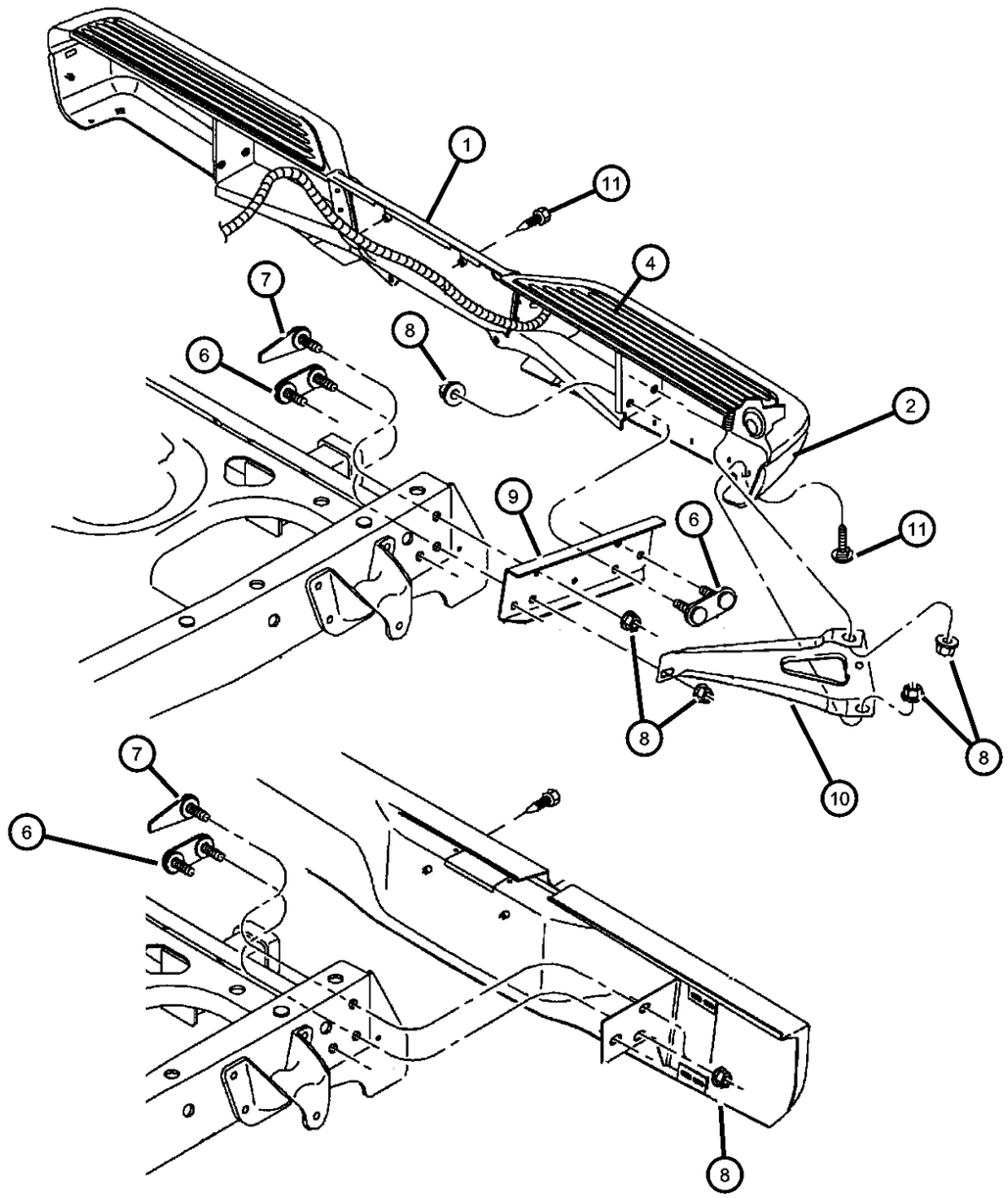

ITEM	PART NUMBER	QTY	LINE	SERIES	BODY	ENGINE	TRANS	TRIM	DESCRIPTION
1									BUMPER, Step
	05066389AA	1							Paint As Required
	55295665	1							Chrome
2									COVER, Bumper
	55255904	1							Textured Grey, Right
	55255905	1							Textured Grey, Left
	5FC78GW7	1							Paint as Req., Right
	5FC79GW7	1							Paint as Req., Left
-3	5FC79GW7	1							PIN, Splash Shield, (NOT SERVICED),
4									STEP PAD, Rear Bumper
	55255902	1							Right
	55255903	1							Left
-5	55255893	1							PANEL, License Plate
6	06504144	2							BOLT AND RETAINER, M12X1.75X35.00
7	06504145	2							BOLT AND RETAINER, Pilot Point, M63.2X11.2X2.0
8	06100055	4							NUT AND WASHER, Hex Nut-Coned Washer, M12 x 1.75
9									BRACKET, Rear Bumper
	55295672	2							Center, Up To 5-6-02
	55295672AC	2			84				Center, After 5-6-02
		2			31, 61				Center, After 5-6-02
10									BRACKET, Rear Bumper
	55295674AB	1							Right
	55295675AB	1							Left
11	06504122	2							BOLT, M12x1.75x35.00

DAKOTA (AN)

SERIES	LINE	BODY	ENGINE	TRANSMISSION
L = Dakota (All)	1 = Dakota 2WD	61 = Regular Cab (112 WB)	EPE = 2.5L 4 Cylinder	DGK = 4 Speed Automatic 42RE
	5 = Dakota 4WD	31 = Club Cab (131 WB)	EHC = 3.9L 6 Cylinder	DGT = 4 Speed Automatic 46RE
		84 = Quad Cab (131 WB)	EML = 5.0L 8 Cylinder	DDC = 5 Speed HD Manual
			EVA = 4.7L Magnum V8	DDK = 5 Speed HD Manual
			EP0 = All 2.5L	DG4 = Multispeed Automatic 45RFE
			EH0 = All 3.9L	DG0 = All Automatic Transmissions
			EM0 = All 5.9L	DBB = All Manual Transmissions
			EV0 = All 4.7L	

AR = use ase required - = Non illustrrated part

Body Hold Down
Figure 13-510

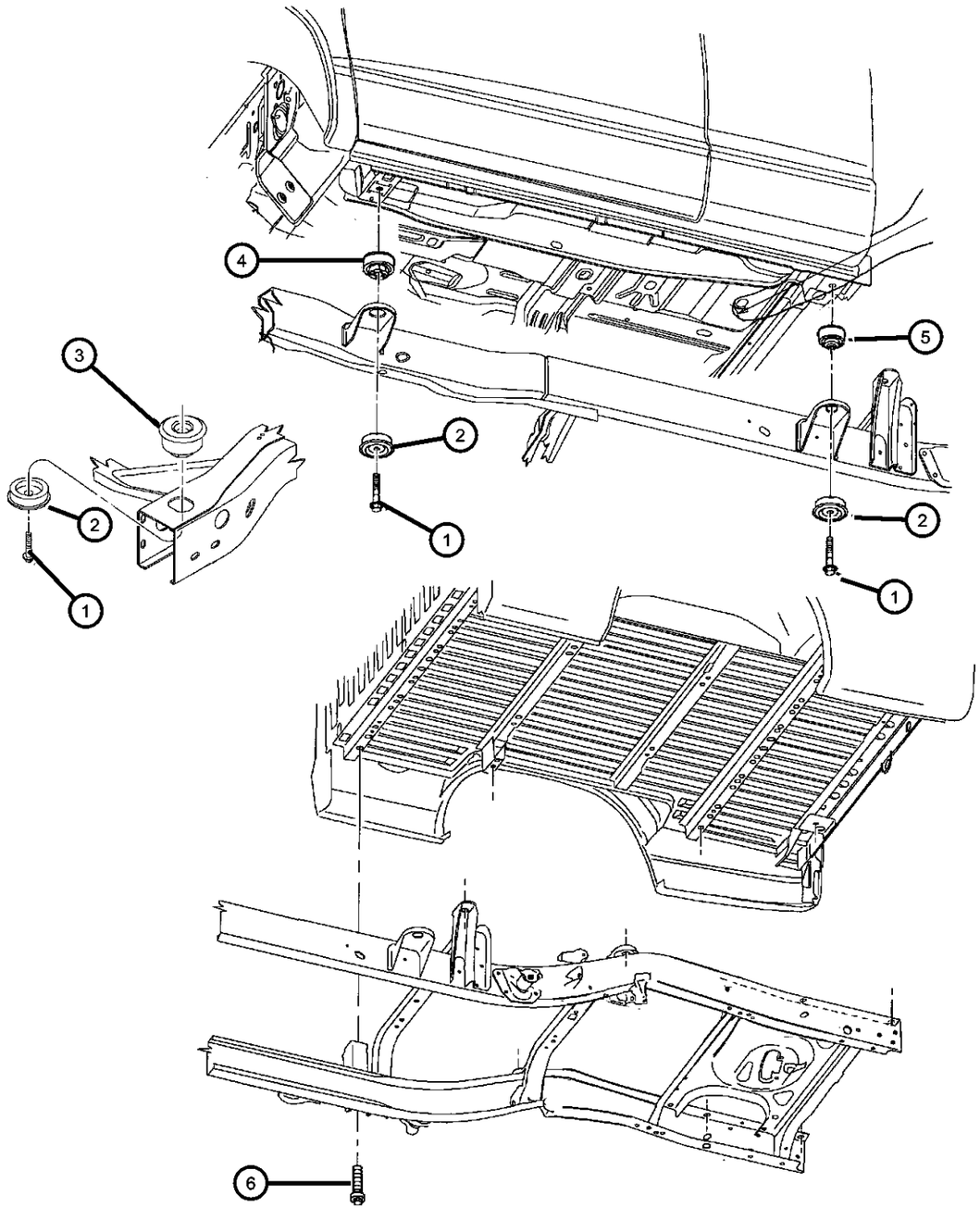

ITEM	PART NUMBER	QTY	LINE	SERIES	BODY	ENGINE	TRANS	TRIM	DESCRIPTION
1									BOLT, Hex Flange Head, M12x1.75x95.50
	06501557	6			31, 61				
		8			84				
2									ISOLATOR, Cab Underbody Rebound
	55255812	6			61				
		8			84				
		4			31				
3	55255703AB	2							ISOLATOR
4									ISOLATOR
	55255704AB	2			31, 61				Front Cushion
		4			84				Front Cushion
5									ISOLATOR, Front Cab Compression
	55255706	2			61, 84				Rear
	55255995	2			31				Rear
6									SCREW AND WASHER, Hex Head, M10x1.5x45
	06506318AA	8			84				
		8			31, 61				

DAKOTA (AN)

SERIES	LINE	BODY	ENGINE	TRANSMISSION
L = Dakota (All)	1 = Dakota 2WD	61 = Regular Cab (112 WB)	EPE = 2.5L 4 Cylinder	DGK = 4 Speed Automatic 42RE
	5 = Dakota 4WD	31 = Club Cab (131 WB)	EHC = 3.9L 6 Cylinder	DGT = 4 Speed Automatic 46RE
		84 = Quad Cab (131 WB)	EML = 5.0L 8 Cylinder	DDC = 5 Speed HD Manual
			EVA = 4.7L Magnum V8	DDK = 5 Speed HD Manual
			EP0 = All 2.5L	DG4 = Multispeed Automatic 45RFE
			EH0 = All 3.9L	DG0 = All Automatic Transmissions
			EM0 = All 5.9L	DBB = All Manual Transmissions
			EV0 = All 4.7L	

Group - 14

Fuel

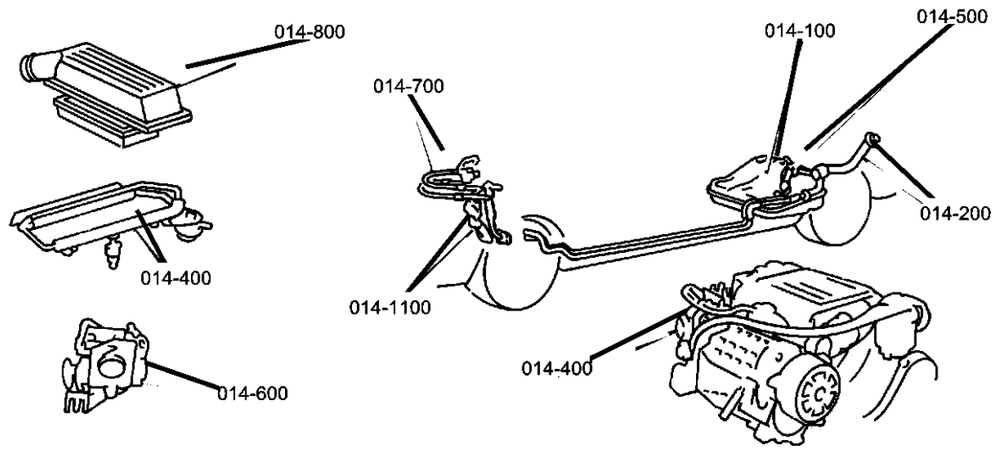

014-100 Tank, Fuel 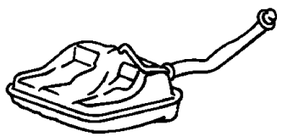	**014-1000** Speed Control 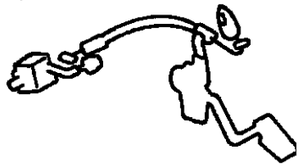	**014-1100** Accelerator Pedal 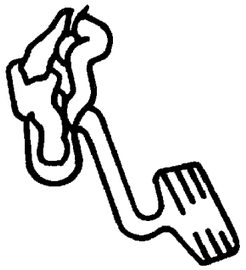	**014-200** Fuel Tank Filler Tube 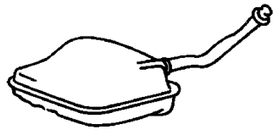
014-300 Fuel Lines 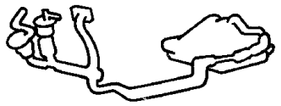	**014-400** Fuel Rail 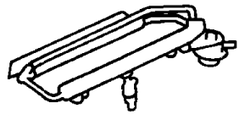	**014-500** Fuel Pump and Sending Unit 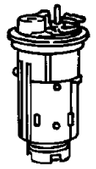	**014-600** Throttle Body
014-700 Throttle Controls 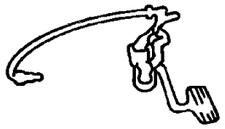	**014-800** Air Cleaner 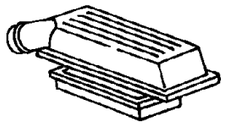		

Group - 14 Fuel

Illustration Title — Group-Fig. No.

Tank, Fuel
Fuel Tank, All Engines ..... Fig. 14 - 110

Fuel Tank Filler Tube
Fuel Filler Tube, All Engines ..... Fig. 14 - 210

Fuel Lines
Fuel Lines, Front, 2.5 [EPE], 3.9 [EHC], 4.7 [EVA], 5.9 [EML] ..... Fig. 14 - 310
Fuel Lines, Rear, 2.5 [EPE], 3.9 [EHC], 4.7 [EVA], 5.9 [EML] ..... Fig. 14 - 315

Fuel Rail
Fuel Rail, 2.5L [EPE], 3.9L [EHC], 4.7L [EVA], 5.9L [EML] ..... Fig. 14 - 410

Fuel Pump and Sending Unit
Fuel Module, All Engines ..... Fig. 14 - 510

Throttle Body
Throttle Body, All Engines ..... Fig. 14 - 610

Throttle Controls
Throttle Controls, 2.5L [EPE] ..... Fig. 14 - 710
Throttle Controls, 3.9L [EHC], 4.7L [EVA], 5.9L [EML] ..... Fig. 14 - 720

Air Cleaner
Air Cleaner, 2.5L [EPE] ..... Fig. 14 - 810
Air Cleaner, 3.9L [EHC], 4.7L [EVA], 5.9L [EML] ..... Fig. 14 - 820

Speed Control
Speed Control, 3.9L [EHC], 4.7L [EVA], 5.9L [EML] ..... Fig. 14 - 1010

Accelerator Pedal
Accelerator Pedal, All Engines ..... Fig. 14 - 1110

Fuel Tank, All Engines
Figure 14-110

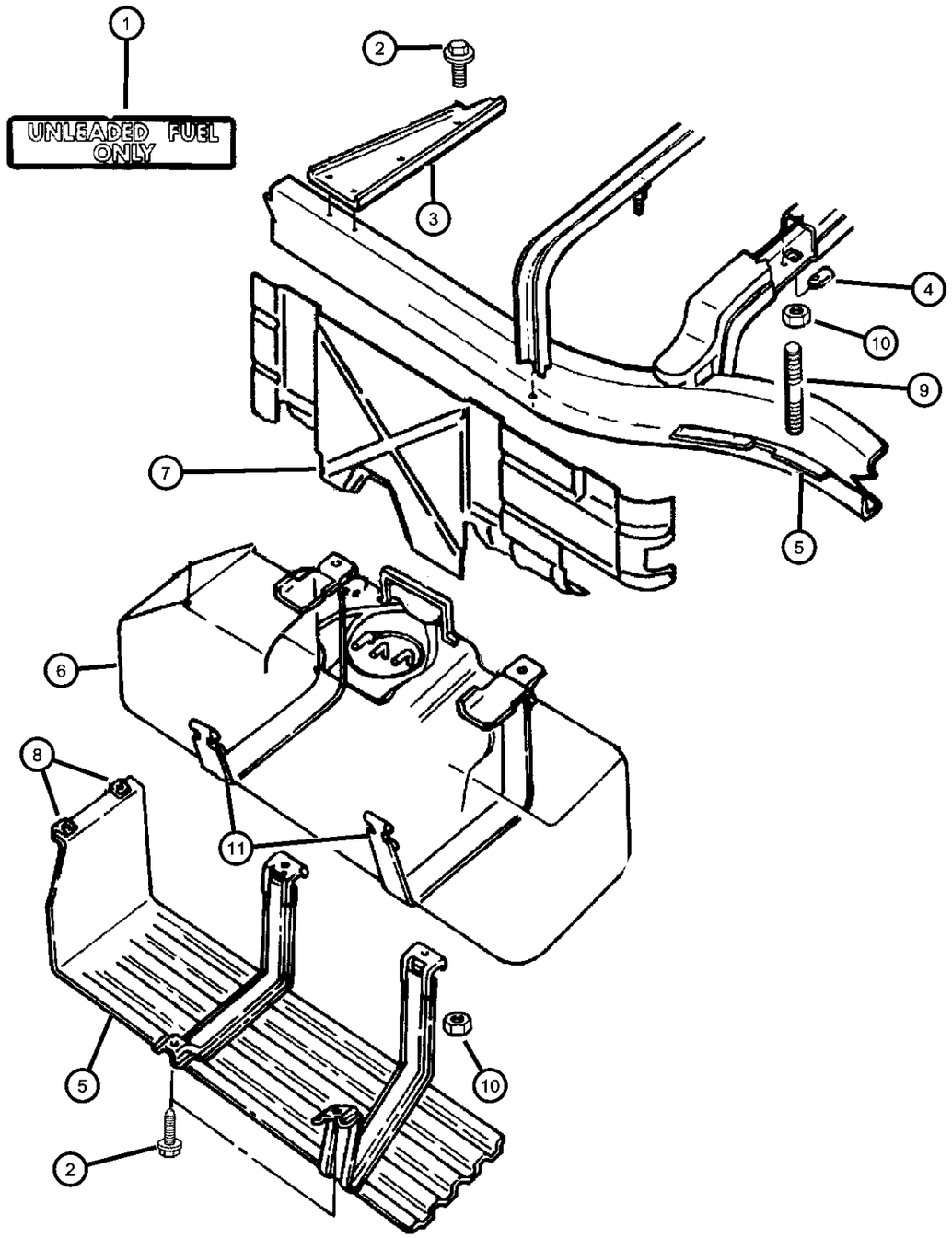

ITEM	PART NUMBER	QTY	LINE	SERIES	BODY	ENGINE	TRANS	TRIM	DESCRIPTION
1		8							LABEL, Unleaded Fuel Only, (NOT SERVICED)
2									SCREW, Tapping, M8x20
	06102153AA	6			31, 61				
		4			84				
3	04279783AB	1							BRACKET, Fuel Tank Skid Plate
4	06101340	2							U-NUT, M10-1.50
5	52102426AB	1	5		84				SKID PLATE, Fuel Tank
6									TANK, Fuel
	05019197AD	1			84				[Vapor Tube Included]
	52102486AA	1			31, 61				
7									SHIELD, Fuel Tank
	04279775	1			31, 61				22 Gallon
	52102423AA	1			84				24 Gallon
8	06101283	2							U-NUT, M8x1.25
9	06503452	2							STUD, M10-1.50x82.50
10	06502337	2							NUT, M10x1.5
11									STRAP, Fuel Tank
	04279772	1			31, 61				Front
	04279773	1			31, 61				Rear
	52102424AA	1			84				Rear
	52102425AA	1			84				Front
-12	05093327AA	1			84				TUBE, Fuel Vapor

DAKOTA (AN)

SERIES	LINE	BODY	ENGINE	TRANSMISSION
L = Dakota (All)	1 = Dakota 2WD	61 = Regular Cab (112 WB)	EPE = 2.5L 4 Cylinder	DGK = 4 Speed Automatic 42RE
	5 = Dakota 4WD	31 = Club Cab (131 WB)	EHC = 3.9L 6 Cylinder	DGT = 4 Speed Automatic 46RE
		84 = Quad Cab (131 WB)	EML = 5.0L 8 Cylinder	DDC = 5 Speed HD Manual
			EVA = 4.7L Magnum V8	DDK = 5 Speed HD Manual
			EP0 = All 2.5L	DG4 = Multispeed Automatic 45RFE
			EH0 = All 3.9L	DG0 = All Automatic Transmissions
			EM0 = All 5.9L	DBB = All Manual Transmissions
			EV0 = All 4.7L	

Fuel Filler Tube, All Engines
Figure 14-210

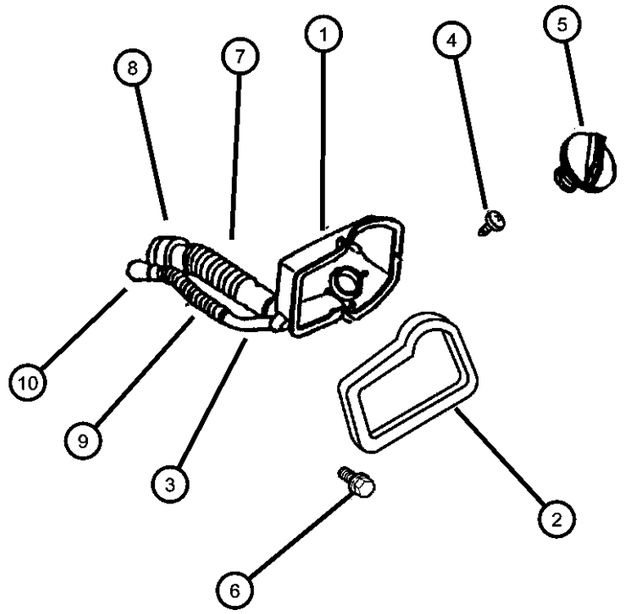

ITEM	PART NUMBER	QTY	LINE	SERIES	BODY	ENGINE	TRANS	TRIM	DESCRIPTION
1									HOUSING, Fuel Filler
	52102142AB	1			31, 61				
	55257271AA	1			84				
2	52102306	1			31, 61				GASKET, Filler Tube Housing
3									TUBE, Fuel Filler
	52102429AA	1			84				
	52102481AA	1			31, 61				
4	00153856	4			31, 61				SCREW, Tapping, .19-16x.625
5	05278632AA	1							CAP, Fuel Filler
6	05278632AA	1							SCREW, .190-16x1.00, (NOT SERVICED)
7									HOSE, Fuel Filler
	52102484AA	1			84				
	52102487AA	1			31, 61				
8	06504998AA	2							CLAMP, Fuel Filler Pipe
9									HOSE, Fuel
	52102483AA	1			84				
	52102490AA	1			31, 61				
10	06505321AA	2							CLAMP, Fuel Filler Pipe

DAKOTA (AN)

SERIES	LINE	BODY	ENGINE	TRANSMISSION
L = Dakota (All)	1 = Dakota 2WD	61 = Regular Cab (112 WB)	EPE = 2.5L 4 Cylinder	DGK = 4 Speed Automatic 42RE
	5 = Dakota 4WD	31 = Club Cab (131 WB)	EHC = 3.9L 6 Cylinder	DGT = 4 Speed Automatic 46RE
		84 = Quad Cab (131 WB)	EML = 5.0L 8 Cylinder	DDC = 5 Speed HD Manual
			EVA = 4.7L Magnum V8	DDK = 5 Speed HD Manual
			EP0 = All 2.5L	DG4 = Multispeed Automatic 45RFE
			EH0 = All 3.9L	DG0 = All Automatic Transmissions
			EM0 = All 5.9L	DBB = All Manual Transmissions
			EV0 = All 4.7L	

Fuel Lines, Front, 2.5 [EPE], 3.9 [EHC], 4.7 [EVA], 5.9 [EML]
Figure 14-310

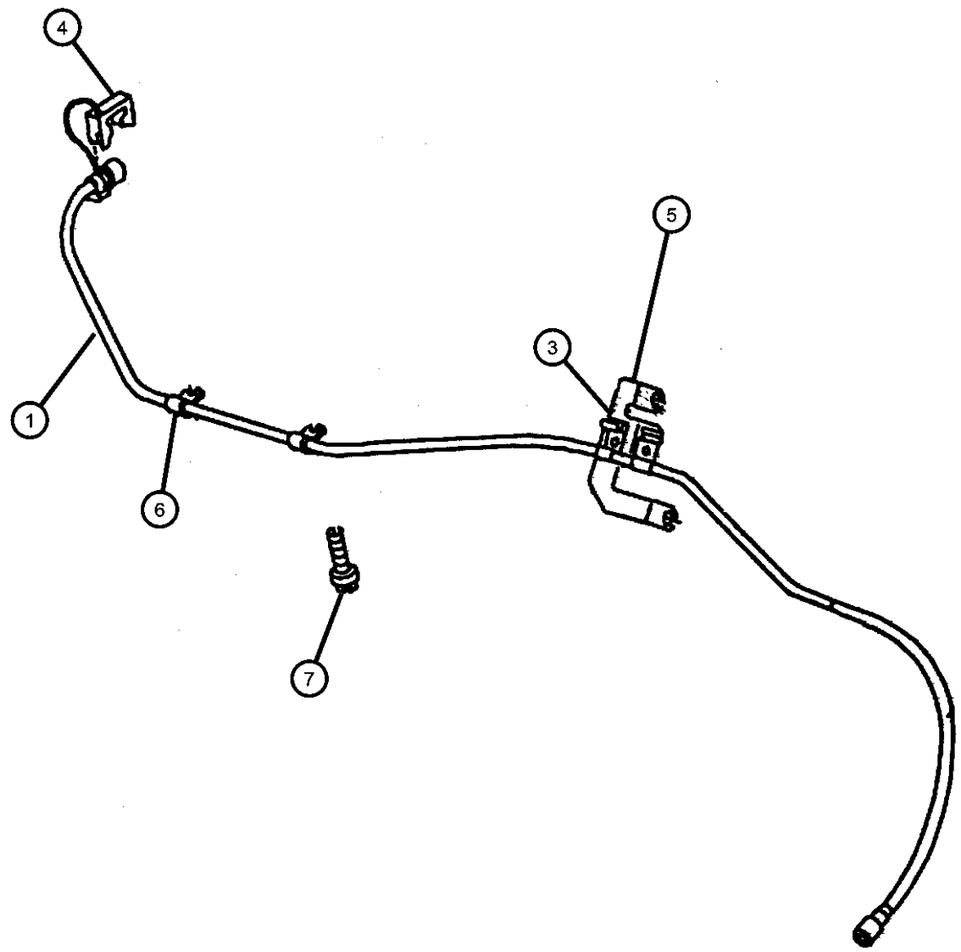

ITEM	PART NUMBER	QTY	LINE	SERIES	BODY	ENGINE	TRANS	TRIM	DESCRIPTION
Note; Sales Codes [EH0]= All 3.9L V-6 Gas Engines [EM0]= All 5.9L V-8 Gas Engines [EP0]= All 2.5L, 4 Cylinder Gas Engines [EV0]= All 4.7L Gas Engines									
1									BUNDLE, Fuel Line
	52102506AB	1				EV0			
	52127706AE	1				EH0, EM0			
-2	52102178AB	1	1			EP0			TUBE, Fuel Supply
3	52102178AB	1							BRACKET, Serviced With Item 1, (NOT SERVICED)
4									CLIP, Fuel Line
	52127788	2				EH0, EM0			
		2				EV0			
		2	1			EP0			
5	52127584	1	1			EP0			BRACKET, Fuel Line
6	00120522	2	1		31, 61	EP0			CLIP, Wrap Around
7	06501979	2				EP0			SCREW AND WASHER, Hex Head, M6x1x17

DAKOTA (AN)

SERIES	LINE	BODY	ENGINE	TRANSMISSION
L = Dakota (All)	1 = Dakota 2WD 5 = Dakota 4WD	61 = Regular Cab (112 WB) 31 = Club Cab (131 WB) 84 = Quad Cab (131 WB)	EPE = 2.5L 4 Cylinder EHC = 3.9L 6 Cylinder EML = 5.0L 8 Cylinder EVA = 4.7L Magnum V8 EP0 = All 2.5L EH0 = All 3.9L EM0 = All 5.9L EV0 = All 4.7L	DGK = 4 Speed Automatic 42RE DGT = 4 Speed Automatic 46RE DDC = 5 Speed HD Manual DDK = 5 Speed HD Manual DG4 = Multispeed Automatic 45RFE DG0 = All Automatic Transmissions DBB = All Manual Transmissions

Fuel Lines, Rear, 2.5 [EPE], 3.9 [EHC], 4.7 [EVA], 5.9 [EML]
Figure 14-315

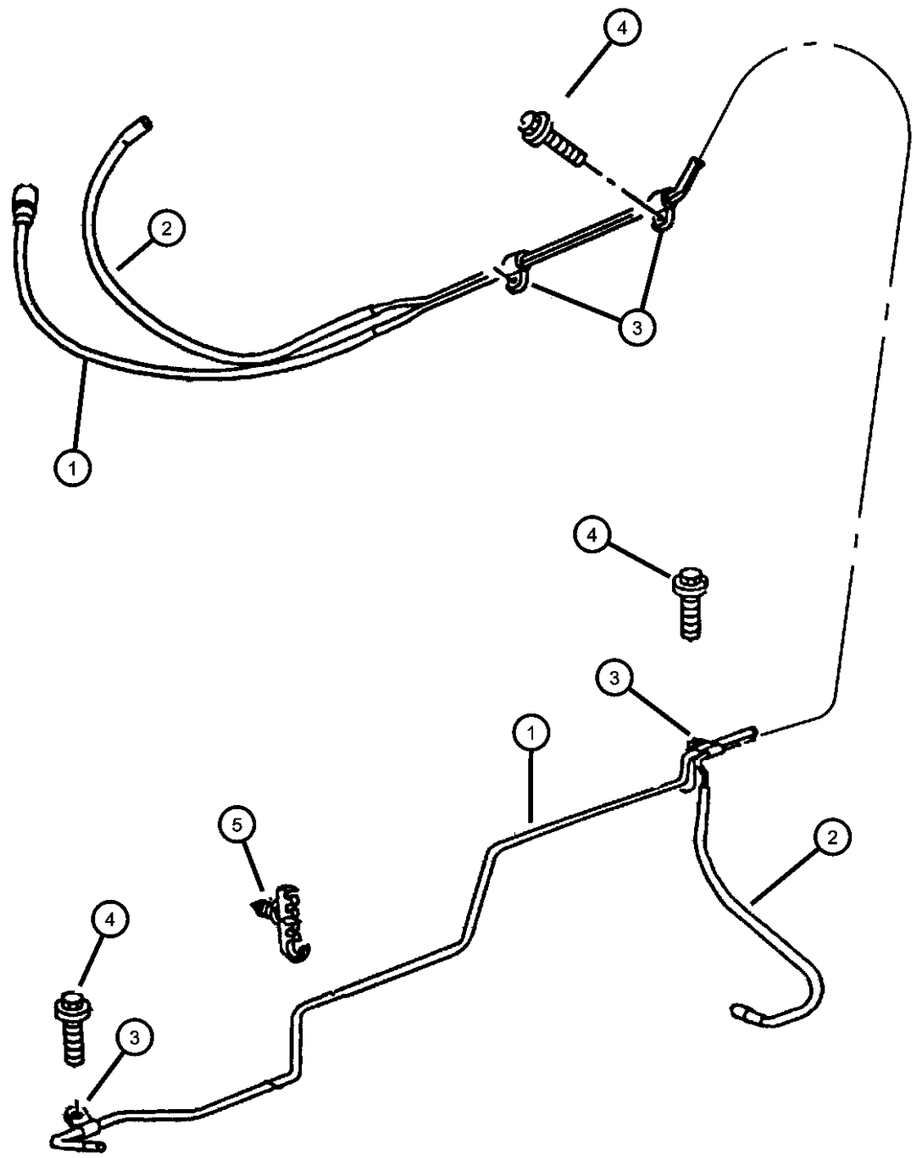

ITEM	PART NUMBER	QTY	LINE	SERIES	BODY	ENGINE	TRANS	TRIM	DESCRIPTION
1									TUBE, Fuel Supply
	52102431AB	1			84				
	52102436AA	1			61				
	52102439AB	1			31				
2									TUBE, Vapor
	52102448AA	1			61				
	52102450AA	1			31				
3									CLIP, Fuel Line
	52102451AA	2			31				
		2			61				
4		2							SCREW, Hex Flange Head, M8x1.25x25.00, (NOT SERVICED)
5									CLIP, 3 Way
	52102304	1							
		2			84				

DAKOTA (AN)

SERIES	LINE	BODY	ENGINE	TRANSMISSION
L = Dakota (All)	1 = Dakota 2WD	61 = Regular Cab (112 WB)	EPE = 2.5L 4 Cylinder	DGK = 4 Speed Automatic 42RE
	5 = Dakota 4WD	31 = Club Cab (131 WB)	EHC = 3.9L 6 Cylinder	DGT = 4 Speed Automatic 46RE
		84 = Quad Cab (131 WB)	EML = 5.0L 8 Cylinder	DDC = 5 Speed HD Manual
			EVA = 4.7L Magnum V8	DDK = 5 Speed HD Manual
			EP0 = All 2.5L	DG4 = Multispeed Automatic 45RFE
			EH0 = All 3.9L	DG0 = All Automatic Transmissions
			EM0 = All 5.9L	DBB = All Manual Transmissions
			EV0 = All 4.7L	

Fuel Rail, 2.5L [EPE], 3.9L [EHC], 4.7L [EVA], 5.9L [EML]
Figure 14-410

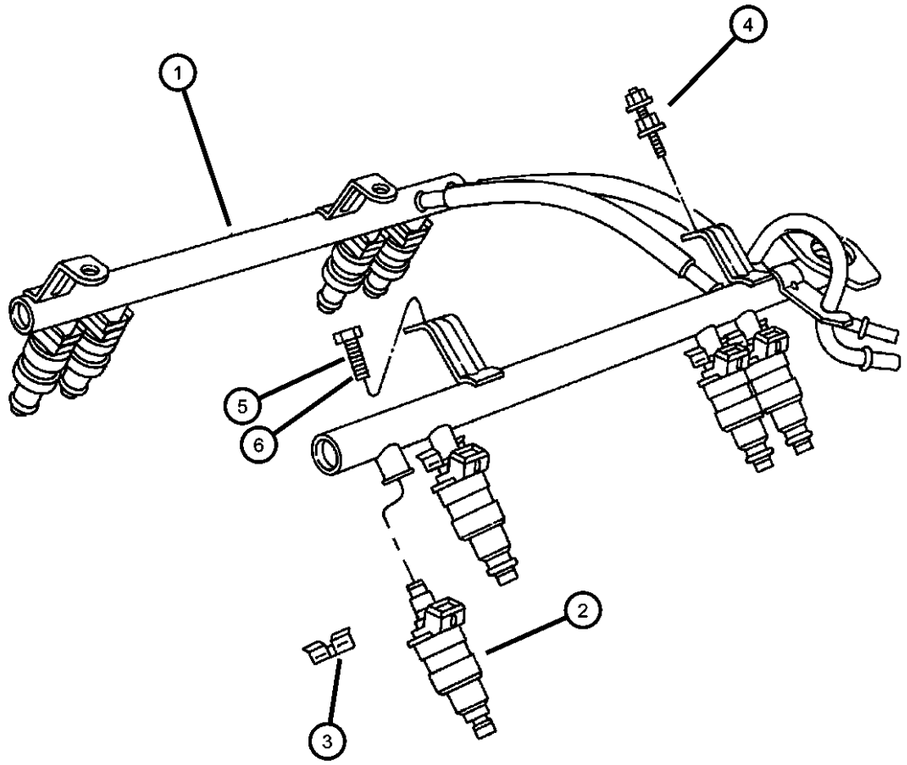

ITEM	PART NUMBER	QTY	LINE	SERIES	BODY	ENGINE	TRANS	TRIM	DESCRIPTION
Note; Sales Codes [EH0]= All 3.9L V-6 Gas Engines [EM0]= All 5.9L V-8 Gas Engines [EP0]= All 2.5L, 4 Cylinder Gas Engines [EV0]= All 4.7L V-8 Gas Engines									
1									RAIL, Fuel
	05013157AA	1				EP0			
	53030593AB	1				EH0			
	53030598AB	1				EM0			
	53030848AC	1				EV0			
2									INJECTOR, Fuel
	53030778	4				EP0			
	53031740AA	8				EM0			
	68000872AA								Wholesale Bulk Injector Package - 70 pieces of 53031740AA
		6				EH0			
	68000872AA								Wholesale Bulk Injector Package - 70 pieces of 53031740AA
	53032145AA	8				EV0			
3									CLIP, Fuel Injector
	04418257AB	8				EM0			
		4				EP0			
		8				EV0			
		6				EH0			
4	06502086	2				EP0			STUD
5	06034549	4				EH0, EM0			SCREW, Hex Head, .312-18x.94
6	06505504AA	4				EV0			SCREW
-7									CAP
	05018781AA	1				EP0			Diagnostic Port
		1				EM0			Diagnostic Port
-8									O RING KIT, Fuel Injector
	04897125AA	8				EV0			
		4				EP0			
	05083745AA	8				EM0			
		6				EH0			

DAKOTA (AN)

SERIES	LINE	BODY	ENGINE	TRANSMISSION
L = Dakota (All)	1 = Dakota 2WD 5 = Dakota 4WD	61 = Regular Cab (112 WB) 31 = Club Cab (131 WB) 84 = Quad Cab (131 WB)	EPE = 2.5L 4 Cylinder EHC = 3.9L 6 Cylinder EML = 5.0L 8 Cylinder EVA = 4.7L Magnum V8 EP0 = All 2.5L EH0 = All 3.9L EM0 = All 5.9L EV0 = All 4.7L	DGK = 4 Speed Automatic 42RE DGT = 4 Speed Automatic 46RE DDC = 5 Speed HD Manual DDK = 5 Speed HD Manual DG4 = Multispeed Automatic 45RFE DG0 = All Automatic Transmissions DBB = All Manual Transmissions

Fuel Module, All Engines
Figure 14-510

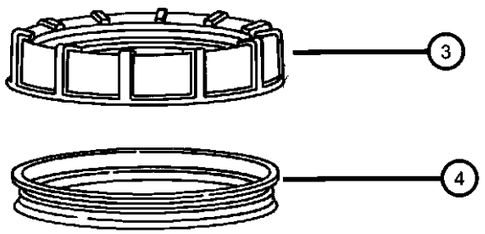

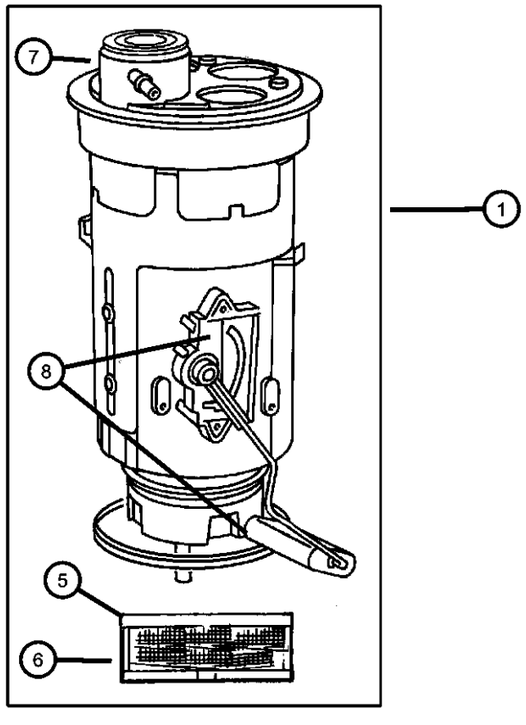

ITEM	PART NUMBER	QTY	LINE	SERIES	BODY	ENGINE	TRANS	TRIM	DESCRIPTION
1	05012273AD	1			31, 61				MODULE KIT, Fuel Pump/Level Unit
-2	05014884AE	1			84				MODULE PACKAGE, Fuel Pump/Level Unit
3									NUT, Fuel Pump Module
	52005389	1			84				
		1			31, 61				
4									SEAL, Fuel Pump and Level Unit
	52018808	1			84				
		1			31, 61				
5	04897498AA	1			31, 61				FILTER KIT, Fuel
6	05014885AB	1			84				FILTER PACKAGE, Fuel
7									FILTER, Fuel Pressure Regulator
	04798825	1			84				
		1			31, 61				
8	05014027AB	1			31, 61				LEVEL UNIT KIT, Fuel

DAKOTA (AN)

SERIES	LINE	BODY	ENGINE	TRANSMISSION
L = Dakota (All)	1 = Dakota 2WD	61 = Regular Cab (112 WB)	EPE = 2.5L 4 Cylinder	DGK = 4 Speed Automatic 42RE
	5 = Dakota 4WD	31 = Club Cab (131 WB)	EHC = 3.9L 6 Cylinder	DGT = 4 Speed Automatic 46RE
		84 = Quad Cab (131 WB)	EML = 5.0L 8 Cylinder	DDC = 5 Speed HD Manual
			EVA = 4.7L Magnum V8	DDK = 5 Speed HD Manual
			EP0 = All 2.5L	DG4 = Multispeed Automatic 45RFE
			EH0 = All 3.9L	DG0 = All Automatic Transmissions
			EM0 = All 5.9L	DBB = All Manual Transmissions
			EV0 = All 4.7L	

Throttle Body, All Engines
Figure 14-610

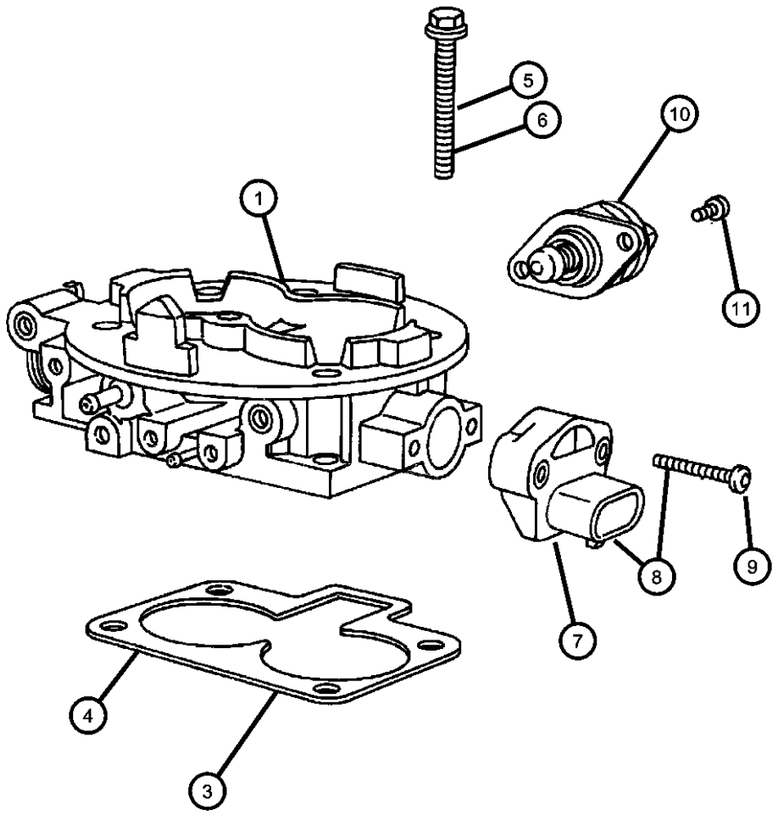

ITEM	PART NUMBER	QTY	LINE	SERIES	BODY	ENGINE	TRANS	TRIM	DESCRIPTION
Note; Sales Codes [EH0]= All 3.9L V-6 Gas Engines [EM0]= All 5.9L V-8 Gas Engines [EP0]= All 2.5L, 4 Cylinder Gas Engines [EV0]= All 4.7L Gas Engines									
1									THROTTLE BODY
	53013143AA	1				EP0			
	53013163AA	1				EV0			
	53031733AA	1				EM0			
	53031806AB	1				EH0			
-2	83503642	1				EV0			O RING, Throttle Body
3	53007543	1				EP0			GASKET, Throttle Body
4									GASKET, Throttle Body To Intake
	53030541	1				EH0			
		1				EM0			
	53030952	1				EV0			
5	06503929	4				EP0			SCREW AND WASHER, Coned Pilot, M6x1x30
6	06036338AA	4				EH0, EM0			SCREW AND WASHER, Hex Head, .312-18x2.38
7	05086203AA	1				EP0			SENSOR PACKAGE, Throttle Position
8									SENSOR KIT, Throttle Position
	05017479AA	1				EH0			
		1				EM0			
		1				EV0			
9									SCREW, Throttle Position Sensor
	04778462	2				EH0			
		2				EM0			
		2				EV0			
10									MOTOR, Air Idle Speed
	04874373AB	1				EP0			
	53030657AC	1				EH0			
		1				EM0			
	53030840	1				EV0			
11									SCREW, A.I.S. Motor

DAKOTA (AN)

SERIES	LINE	BODY	ENGINE	TRANSMISSION
L = Dakota (All)	1 = Dakota 2WD 5 = Dakota 4WD	61 = Regular Cab (112 WB) 31 = Club Cab (131 WB) 84 = Quad Cab (131 WB)	EPE = 2.5L 4 Cylinder EHC = 3.9L 6 Cylinder EML = 5.0L 8 Cylinder EVA = 4.7L Magnum V8 EP0 = All 2.5L EH0 = All 3.9L EM0 = All 5.9L EV0 = All 4.7L	DGK = 4 Speed Automatic 42RE DGT = 4 Speed Automatic 46RE DDC = 5 Speed HD Manual DDK = 5 Speed HD Manual DG4 = Multispeed Automatic 45RFE DG0 = All Automatic Transmissions DBB = All Manual Transmissions

Throttle Body, All Engines
Figure 14-610

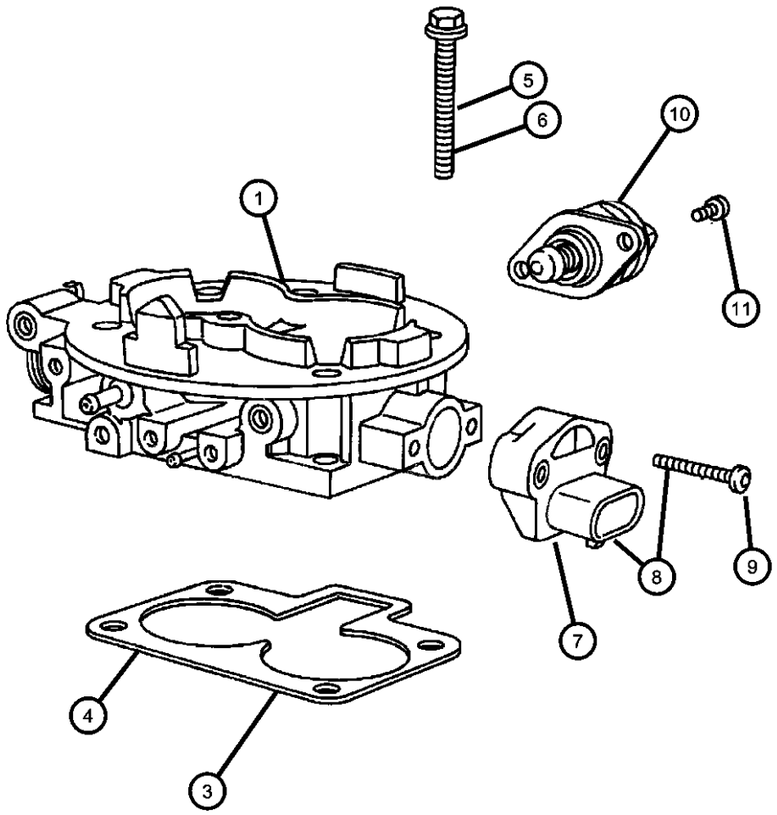

ITEM	PART NUMBER	QTY	LINE	SERIES	BODY	ENGINE	TRANS	TRIM	DESCRIPTION
	05003467AA	2				EH0			
		2				EM0			

DAKOTA (AN)

SERIES	LINE	BODY	ENGINE	TRANSMISSION
L = Dakota (All)	1 = Dakota 2WD	61 = Regular Cab (112 WB)	EPE = 2.5L 4 Cylinder	DGK = 4 Speed Automatic 42RE
	5 = Dakota 4WD	31 = Club Cab (131 WB)	EHC = 3.9L 6 Cylinder	DGT = 4 Speed Automatic 46RE
		84 = Quad Cab (131 WB)	EML = 5.0L 8 Cylinder	DDC = 5 Speed HD Manual
			EVA = 4.7L Magnum V8	DDK = 5 Speed HD Manual
			EP0 = All 2.5L	DG4 = Multispeed Automatic 45RFE
			EH0 = All 3.9L	DG0 = All Automatic Transmissions
			EM0 = All 5.9L	DBB = All Manual Transmissions
			EV0 = All 4.7L	

Throttle Controls, 2.5L [EPE]
Figure 14-710

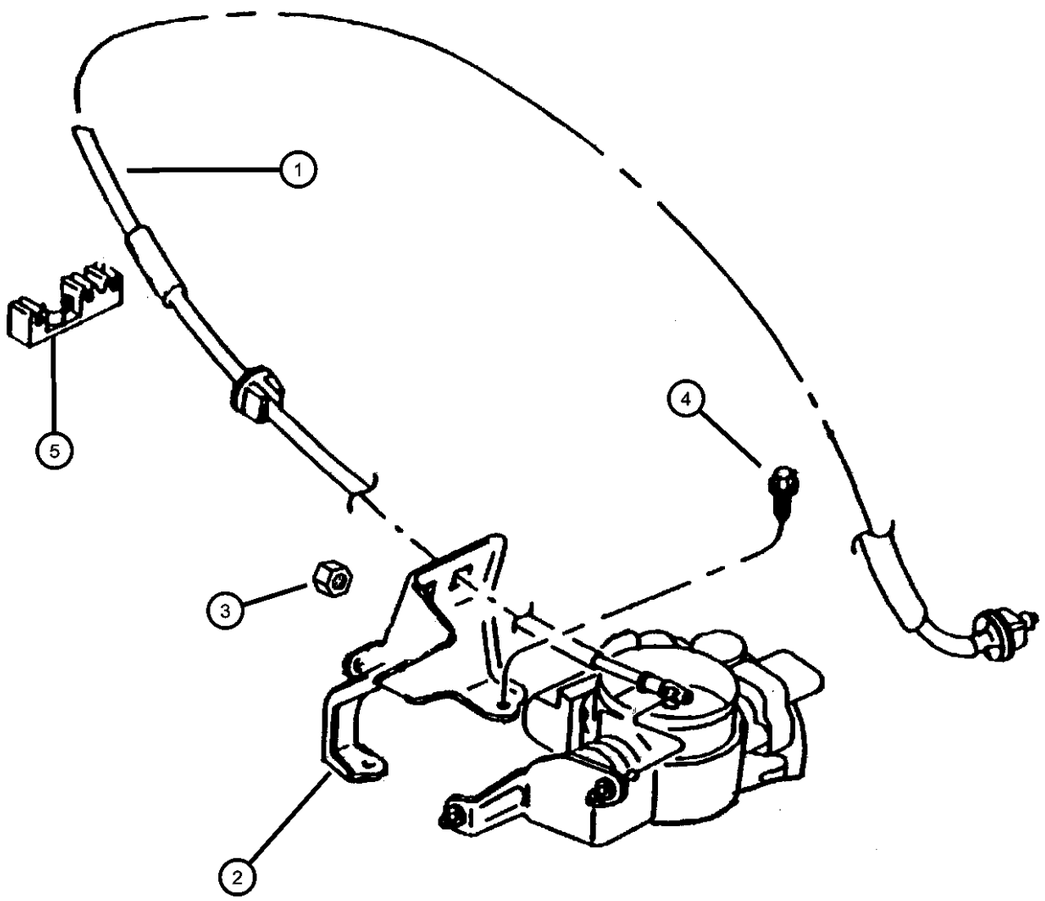

ITEM	PART NUMBER	QTY	LINE	SERIES	BODY	ENGINE	TRANS	TRIM	DESCRIPTION
Note; Sales Codes									
[EP0]= All 2.5L, 4 Cylinder Gas Engines									
1	53031715AA	1				EP0			CABLE, Accelerator
2	53007485	1				EP0			BRACKET, Accelerator Cable
3	06100047	1				EP0			NUT AND WASHER, Hex Nut-Coned Washer, M6 x 1.00
4	06501979	2				EP0			SCREW AND WASHER, Hex Head, M6x1x17
5	53007620	1				EP0			GUIDE, Accelerator Cable

DAKOTA (AN)

SERIES	LINE	BODY	ENGINE	TRANSMISSION
L = Dakota (All)	1 = Dakota 2WD	61 = Regular Cab (112 WB)	EPE = 2.5L 4 Cylinder	DGK = 4 Speed Automatic 42RE
	5 = Dakota 4WD	31 = Club Cab (131 WB)	EHC = 3.9L 6 Cylinder	DGT = 4 Speed Automatic 46RE
		84 = Quad Cab (131 WB)	EML = 5.0L 8 Cylinder	DDC = 5 Speed HD Manual
			EVA = 4.7L Magnum V8	DDK = 5 Speed HD Manual
			EP0 = All 2.5L	DG4 = Multispeed Automatic 45RFE
			EH0 = All 3.9L	DG0 = All Automatic Transmissions
			EM0 = All 5.9L	DBB = All Manual Transmissions
			EV0 = All 4.7L	

Throttle Controls, 3.9L [EHC], 4.7L [EVA], 5.9L [EML]
Figure 14-720

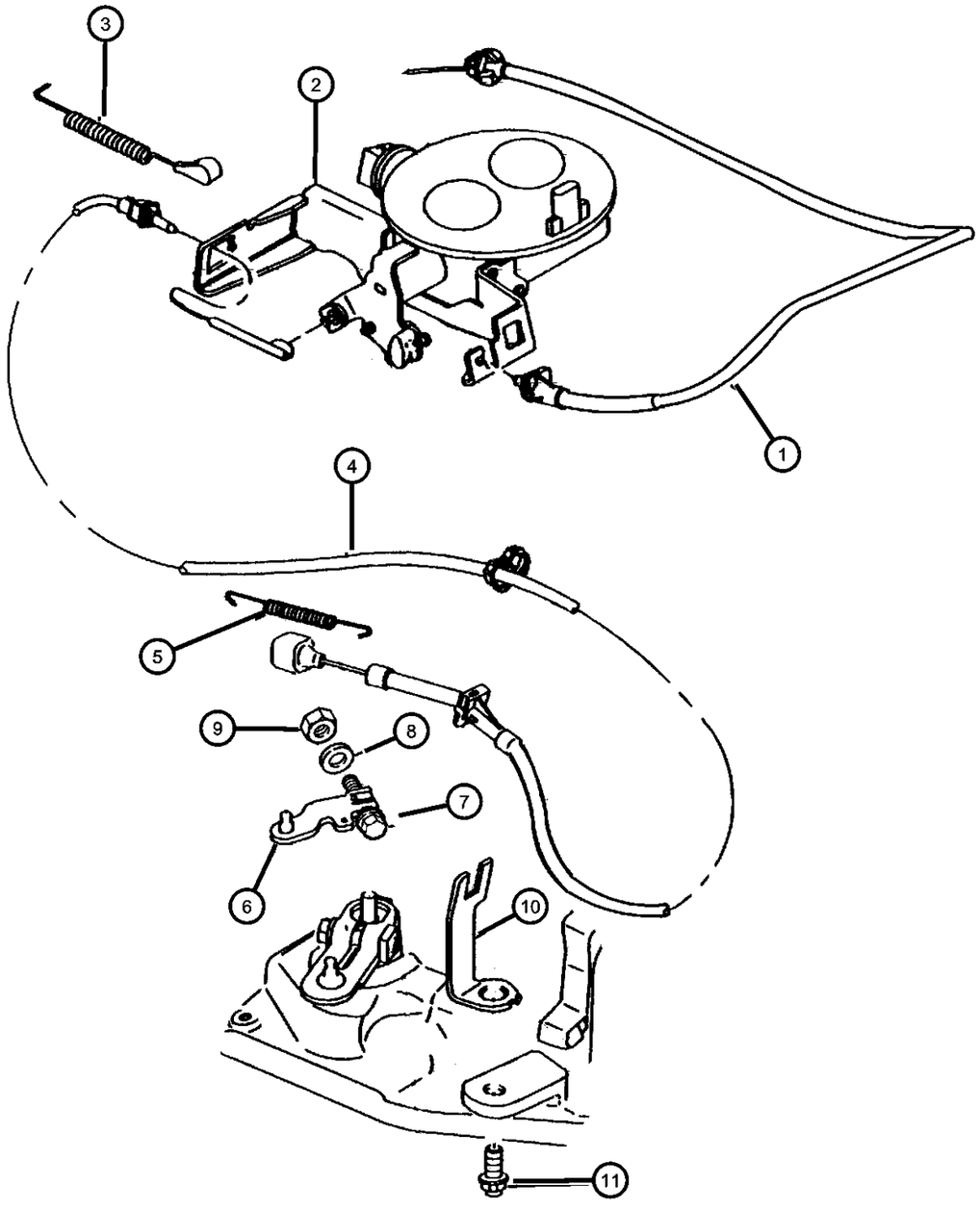

ITEM	PART NUMBER	QTY	LINE	SERIES	BODY	ENGINE	TRANS	TRIM	DESCRIPTION
Note; Sales Codes [DBB]= All Manual Transmissions [DGK]= 4 Speed Automatic Transmission 42RE [DGT]= 4 Speed Automatic Transmission 46RE [DG4]= Multi Speed Automatic Transmission 45RFE									
1									CABLE, Accelerator
	53031548AB	1				EH0			
	53031556AB	1				EM0			
	53031592	1				EV0			
2	53031592	1							BRACKET, Throttle Control Cable, Serviced in Throttle Body, (NOT SERVICED)
3	52078102	1				EH0, EM0	DBB		SPRING, Throttle Return
4	52104030AD	1					DGK, DGT		CABLE, Throttle Valve
5	53009055	1					DGK, DGT		SPRING, Throttle Valve Return
6	52079065	1					DGK, DGT		LEVER, Throttle Valve
7	00181065	1					DGK, DGT		BOLT, Hex Head, .25-20x1.00
8	00138165	1					DGK, DGT		WASHER, Lock
9									NUT, Hex, .250-20
	J0120375	1					DG4		
		1					DGK, DGT		
10	52079101	1					DGK, DGT		BRACKET, Cable
11	06029799	1					DGK, DGT		BOLT, Hex Head, .375-16x1.00

DAKOTA (AN)

SERIES	LINE	BODY	ENGINE	TRANSMISSION
L = Dakota (All)	1 = Dakota 2WD 5 = Dakota 4WD	61 = Regular Cab (112 WB) 31 = Club Cab (131 WB) 84 = Quad Cab (131 WB)	EPE = 2.5L 4 Cylinder EHC = 3.9L 6 Cylinder EML = 5.0L 8 Cylinder EVA = 4.7L Magnum V8 EP0 = All 2.5L EH0 = All 3.9L EM0 = All 5.9L EV0 = All 4.7L	DGK = 4 Speed Automatic 42RE DGT = 4 Speed Automatic 46RE DDC = 5 Speed HD Manual DDK = 5 Speed HD Manual DG4 = Multispeed Automatic 45RFE DG0 = All Automatic Transmissions DBB = All Manual Transmissions

Air Cleaner, 2.5L [EPE]
Figure 14-810

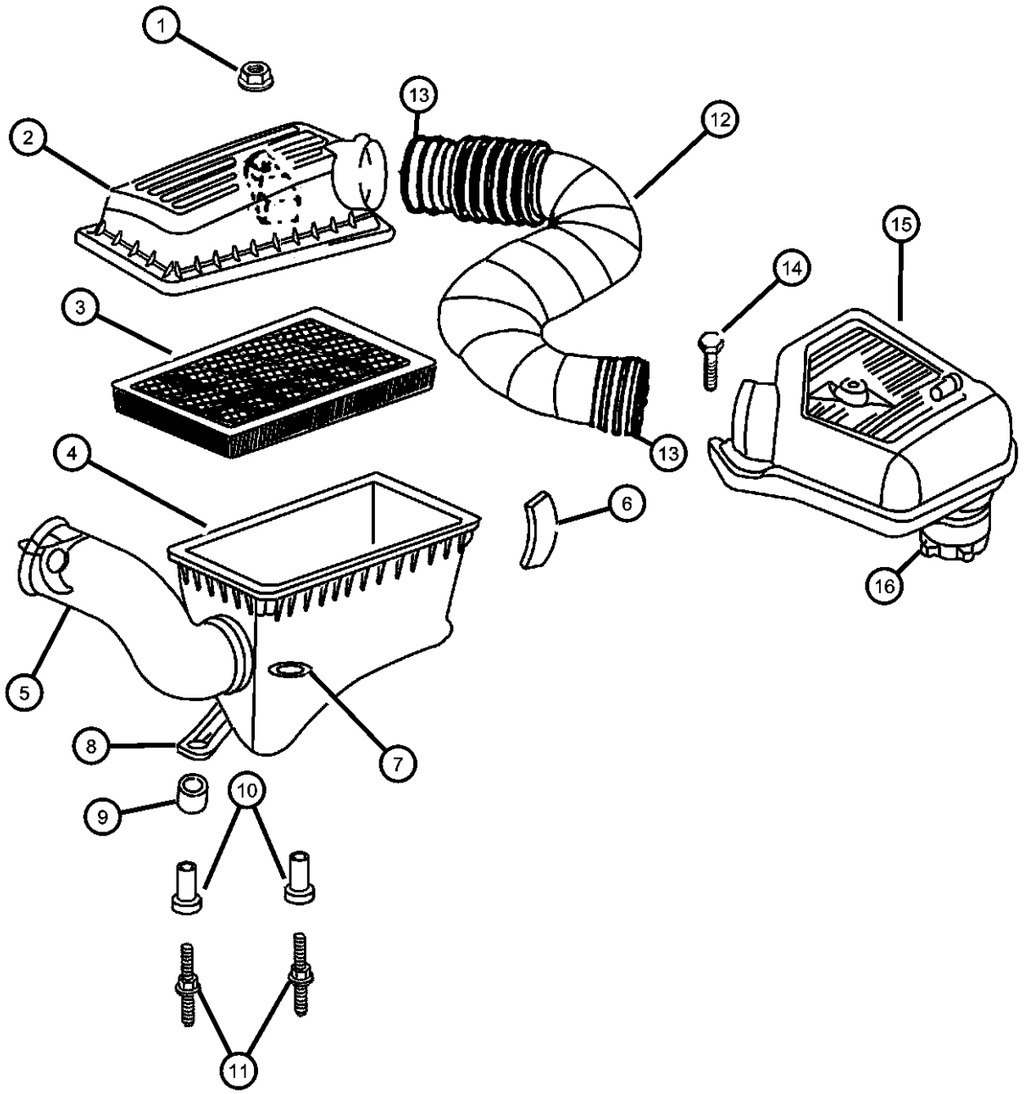

ITEM	PART NUMBER	QTY	LINE	SERIES	BODY	ENGINE	TRANS	TRIM	DESCRIPTION
Note; Sales Codes [EH0]= All 3.9L V-6 Gas Engines [EM0]= All 5.9L V-8 Gas Engines [EP0]= All 2.5L, 4 Cylinder Gas Engines									
1	34201358	1							NUT AND WASHER, Hex Nut-Sealing Washer, M6 x 1.00
2	53031760AB	1				EH0, EM0, EP0			COVER, Air Cleaner
3	53004383	1				EH0, EM0, EP0			FILTER, Air
	77060008								Performance Cold Air Intake System, AN, 1998-2002, 5.9L
	P4510466								Performance Air Filter, AN, 1999-2002, 4.7L
	P4510467								Performance Air Filter, AN, 1997-1999, 5.2L/5.9L
	P4510468								Performance Air Filter, AN, 2000-2002, 5.9L
	P4510469								Performance Air Filter, BR, 1994-2001, 5.2L/5.9L
	P4510474								Performance Air Filter, XJ, 1991-2001, 4.0L
4	53031770AB	1				EH0, EM0, EP0			BODY, Air Cleaner
5	53031692AA	1				EH0, EM0, EP0			DUCT, Air Cleaner
6	05277576	4				EH0, EM0, EP0			LATCH, Air Cleaner
7	04268295	2				EH0, EM0, EP0			GROMMET, Air Cleaner Bracket
8	04573049	1				EH0, EM0, EP0			ISOLATOR, Air Cleaner Mounting Leg
9	04573211	1				EH0, EM0, EP0			BUSHING, Isolator Mounting Leg
10	53030406	2							FASTENER, Mounting Post
11	06503955	AR							STUD, M6x1.00x18
12									HOSE, Air Cleaner
	53030761	1				EP0			
	53032083AA	1				EV0			
13	53032087AA	2				EP0			CLAMP, Air Cleaner Duct
14	06504503	2				EP0			SCREW, Hex Flange Head

DAKOTA (AN)

SERIES	LINE	BODY	ENGINE	TRANSMISSION
L = Dakota (All)	1 = Dakota 2WD 5 = Dakota 4WD	61 = Regular Cab (112 WB) 31 = Club Cab (131 WB) 84 = Quad Cab (131 WB)	EPE = 2.5L 4 Cylinder EHC = 3.9L 6 Cylinder EML = 5.0L 8 Cylinder EVA = 4.7L Magnum V8 EP0 = All 2.5L EH0 = All 3.9L EM0 = All 5.9L EV0 = All 4.7L	DGK = 4 Speed Automatic 42RE DGT = 4 Speed Automatic 46RE DDC = 5 Speed HD Manual DDK = 5 Speed HD Manual DG4 = Multispeed Automatic 45RFE DG0 = All Automatic Transmissions DBB = All Manual Transmissions

Air Cleaner, 2.5L [EPE]
Figure 14-810

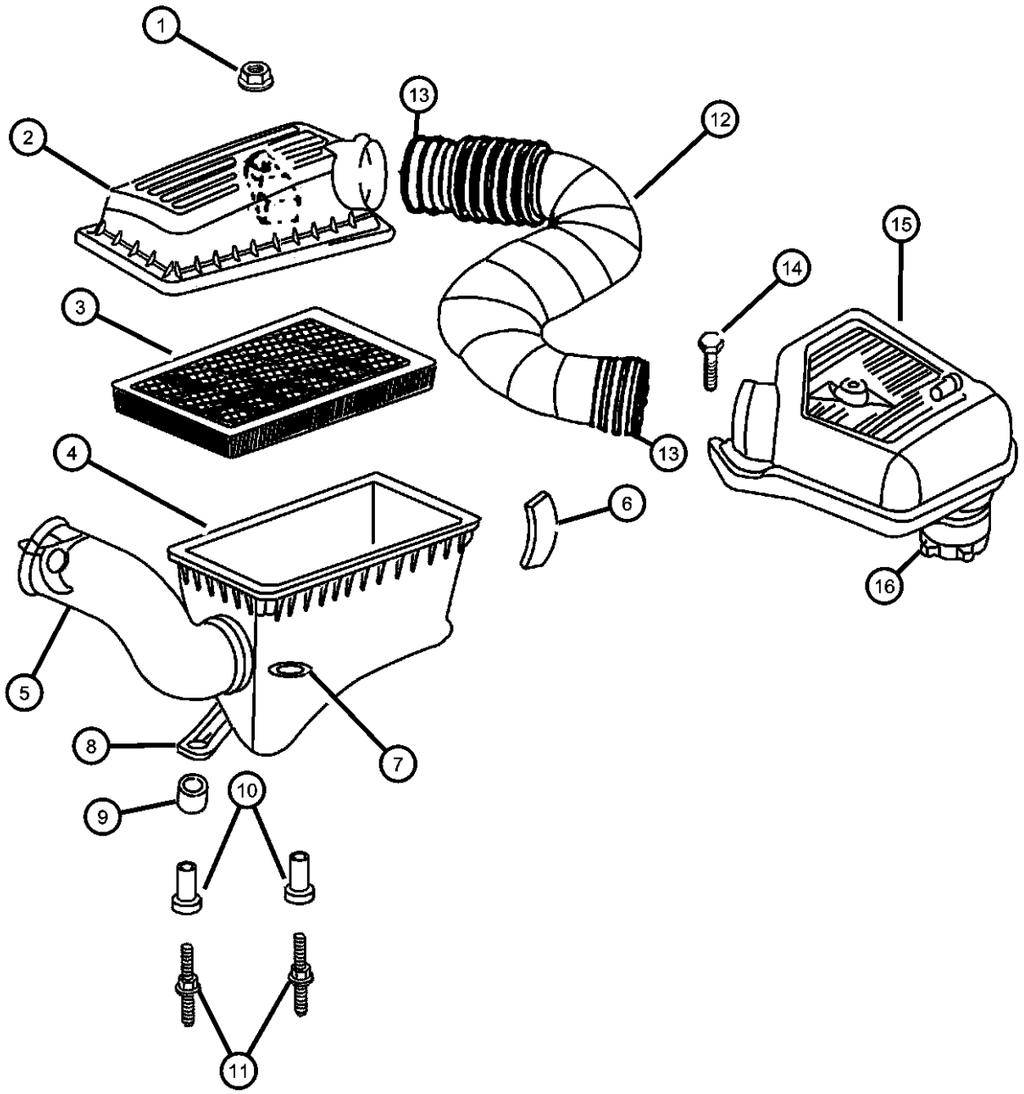

ITEM	PART NUMBER	QTY	LINE	SERIES	BODY	ENGINE	TRANS	TRIM	DESCRIPTION
15	53030759	1				EP0			RESONATOR, Air Cleaner
16	53032086AA	1				EP0			CLAMP

DAKOTA (AN)

SERIES	LINE	BODY	ENGINE	TRANSMISSION
L = Dakota (All)	1 = Dakota 2WD	61 = Regular Cab (112 WB)	EPE = 2.5L 4 Cylinder	DGK = 4 Speed Automatic 42RE
	5 = Dakota 4WD	31 = Club Cab (131 WB)	EHC = 3.9L 6 Cylinder	DGT = 4 Speed Automatic 46RE
		84 = Quad Cab (131 WB)	EML = 5.0L 8 Cylinder	DDC = 5 Speed HD Manual
			EVA = 4.7L Magnum V8	DDK = 5 Speed HD Manual
			EP0 = All 2.5L	DG4 = Multispeed Automatic 45RFE
			EH0 = All 3.9L	DG0 = All Automatic Transmissions
			EM0 = All 5.9L	DBB = All Manual Transmissions
			EV0 = All 4.7L	

Air Cleaner, 3.9L [EHC], 4.7L [EVA], 5.9L [EML]
Figure 14-820

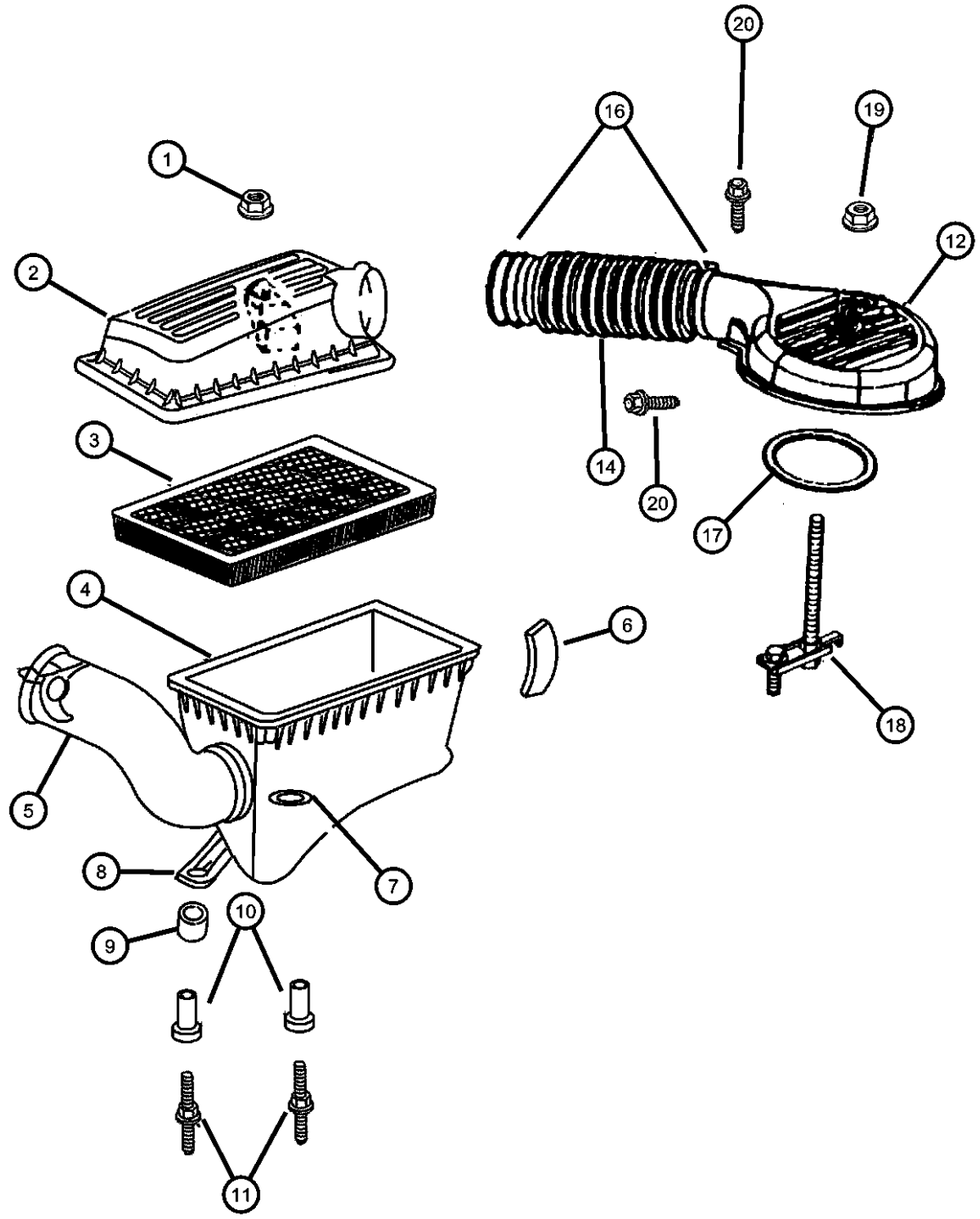

ITEM	PART NUMBER	QTY	LINE	SERIES	BODY	ENGINE	TRANS	TRIM	DESCRIPTION
Note; Sales Codes [EH0]= All 3.9L V-6 Gas Engines [EM0]= All 5.9L V-8 Gas Engines [EP0]= All 2.5L, 4 Cylinder Gas Engines [EV0]= All 4.7L Gas Engines									
1	34201358	1							NUT AND WASHER, Hex Nut-Sealing Washer, M6 x 1.00
2									COVER, Air Cleaner
	53031760AB	1				EH0, EM0, EP0			
	53031771AA	1				EV0			
3									FILTER, Air
	53004383	1				EV0			
	77060008								Performance Cold Air Intake System, AN, 1998-2002, 5.9L
	P4510466								Performance Air Filter, AN, 1999-2002, 4.7L
	P4510467								Performance Air Filter, AN, 1997-1999, 5.2L/5.9L
	P4510468								Performance Air Filter, AN, 2000-2002, 5.9L
	P4510469								Performance Air Filter, BR, 1994-2001, 5.2L/5.9L
	P4510474								Performance Air Filter, XJ, 1991-2001, 4.0L
		1				EH0, EM0, EP0			
	77060008								Performance Cold Air Intake System, AN, 1998-2002, 5.9L
	P4510466								Performance Air Filter, AN, 1999-2002, 4.7L
	P4510467								Performance Air Filter, AN, 1997-1999, 5.2L/5.9L
	P4510468								Performance Air Filter, AN, 2000-2002, 5.9L
	P4510469								Performance Air Filter, BR, 1994-2001, 5.2L/5.9L
	P4510474								Performance Air Filter, XJ, 1991-2001, 4.0L
4									BODY, Air Cleaner
	53031770AB	1				EV0			
		1				EH0, EM0, EP0			

DAKOTA (AN)

SERIES	LINE	BODY	ENGINE	TRANSMISSION
L = Dakota (All)	1 = Dakota 2WD 5 = Dakota 4WD	61 = Regular Cab (112 WB) 31 = Club Cab (131 WB) 84 = Quad Cab (131 WB)	EPE = 2.5L 4 Cylinder EHC = 3.9L 6 Cylinder EML = 5.0L 8 Cylinder EVA = 4.7L Magnum V8 EP0 = All 2.5L EH0 = All 3.9L EM0 = All 5.9L EV0 = All 4.7L	DGK = 4 Speed Automatic 42RE DGT = 4 Speed Automatic 46RE DDC = 5 Speed HD Manual DDK = 5 Speed HD Manual DG4 = Multispeed Automatic 45RFE DG0 = All Automatic Transmissions DBB = All Manual Transmissions

Air Cleaner, 3.9L [EHC], 4.7L [EVA], 5.9L [EML]
Figure 14-820

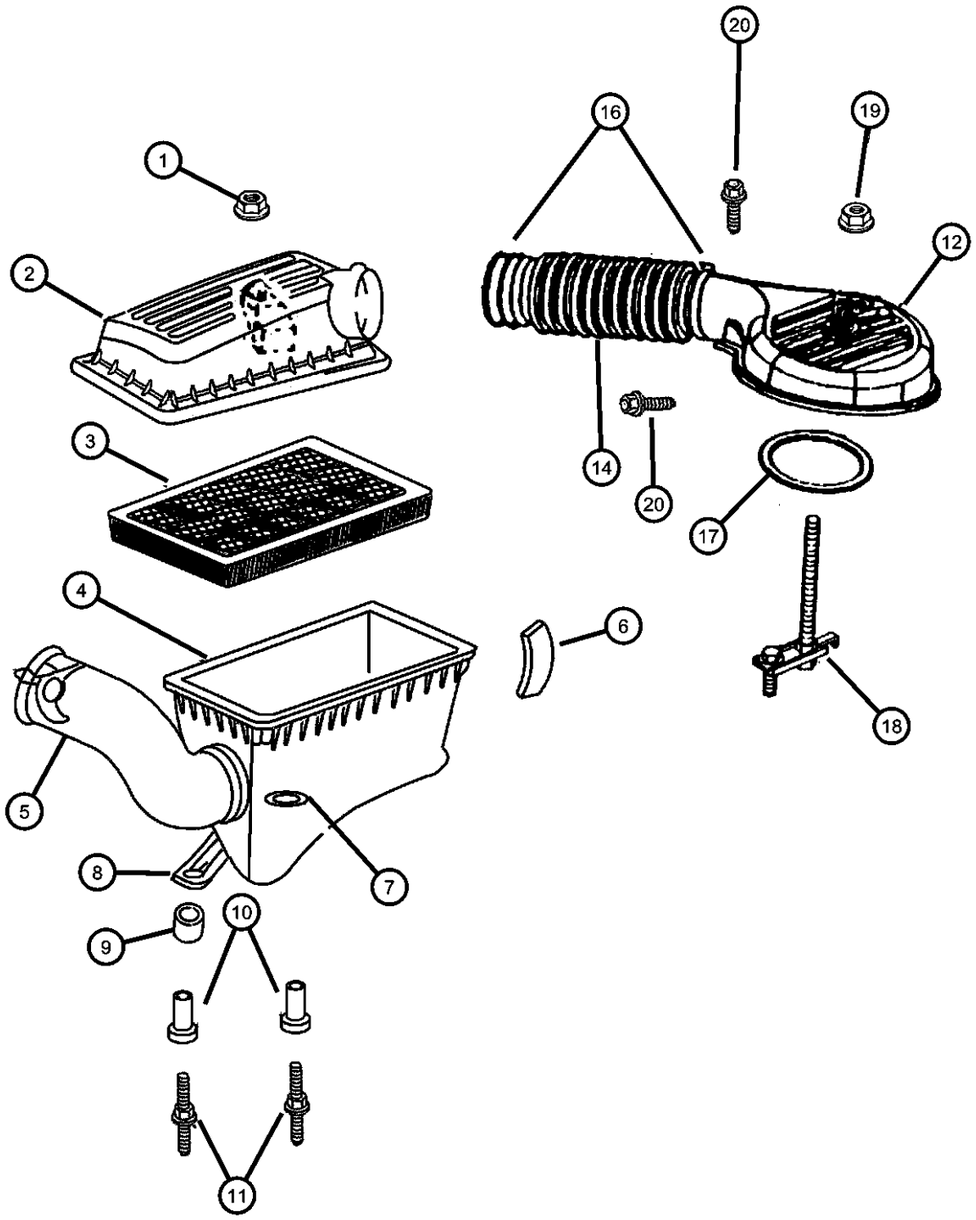

ITEM	PART NUMBER	QTY	LINE	SERIES	BODY	ENGINE	TRANS	TRIM	DESCRIPTION
5									DUCT, Air Cleaner
	53031692AA	1				EV0			
		1				EH0, EM0, EP0			
6									LATCH, Air Cleaner
	05277576	4				EV0			
		4				EH0, EM0, EP0			
7									GROMMET, Air Cleaner Bracket
	04268295	2				EV0			
		2				EH0, EM0, EP0			
8									ISOLATOR, Air Cleaner Mounting Leg
	04573049	1				EV0			
		1				EH0, EM0, EP0			
9									BUSHING, Isolator Mounting Leg
	04573211	1				EV0			
		1				EH0, EM0, EP0			
10	53030406	2							FASTENER, Mounting Post
11	06503955	AR							STUD, M6x1.00x18
12	04883598AA	1				EH0, EM0			BONNET, Throttle Body Air Inlet
-13	53032084AB	1				EV0			RESONATOR, Air Cleaner
14	04883599AA	1				EH0, EM0			HOSE, Air Cleaner to T/Body
-15	53032083AA	1				EV0			HOSE, Air Cleaner
16	53032088AA	2				EH0, EM0			CLAMP, Air Cleaner Duct
17	53032451AA	1				EH0, EM0			GASKET, Air Cleaner To T/Body
18	53031572AB	1				EH0, EM0			BRACKET, Air Cleaner
19	06504488	1				EH0, EM0			NUT, .25-20
20	06504488	1							SCREW, M6x1.00x35.00, (NOT SERVICED)

DAKOTA (AN)

SERIES	LINE	BODY	ENGINE	TRANSMISSION
L = Dakota (All)	1 = Dakota 2WD 5 = Dakota 4WD	61 = Regular Cab (112 WB) 31 = Club Cab (131 WB) 84 = Quad Cab (131 WB)	EPE = 2.5L 4 Cylinder EHC = 3.9L 6 Cylinder EML = 5.0L 8 Cylinder EVA = 4.7L Magnum V8 EP0 = All 2.5L EH0 = All 3.9L EM0 = All 5.9L EV0 = All 4.7L	DGK = 4 Speed Automatic 42RE DGT = 4 Speed Automatic 46RE DDC = 5 Speed HD Manual DDK = 5 Speed HD Manual DG4 = Multispeed Automatic 45RFE DG0 = All Automatic Transmissions DBB = All Manual Transmissions

Speed Control, 3.9L [EHC], 4.7L [EVA], 5.9L [EML]
Figure 14-1010

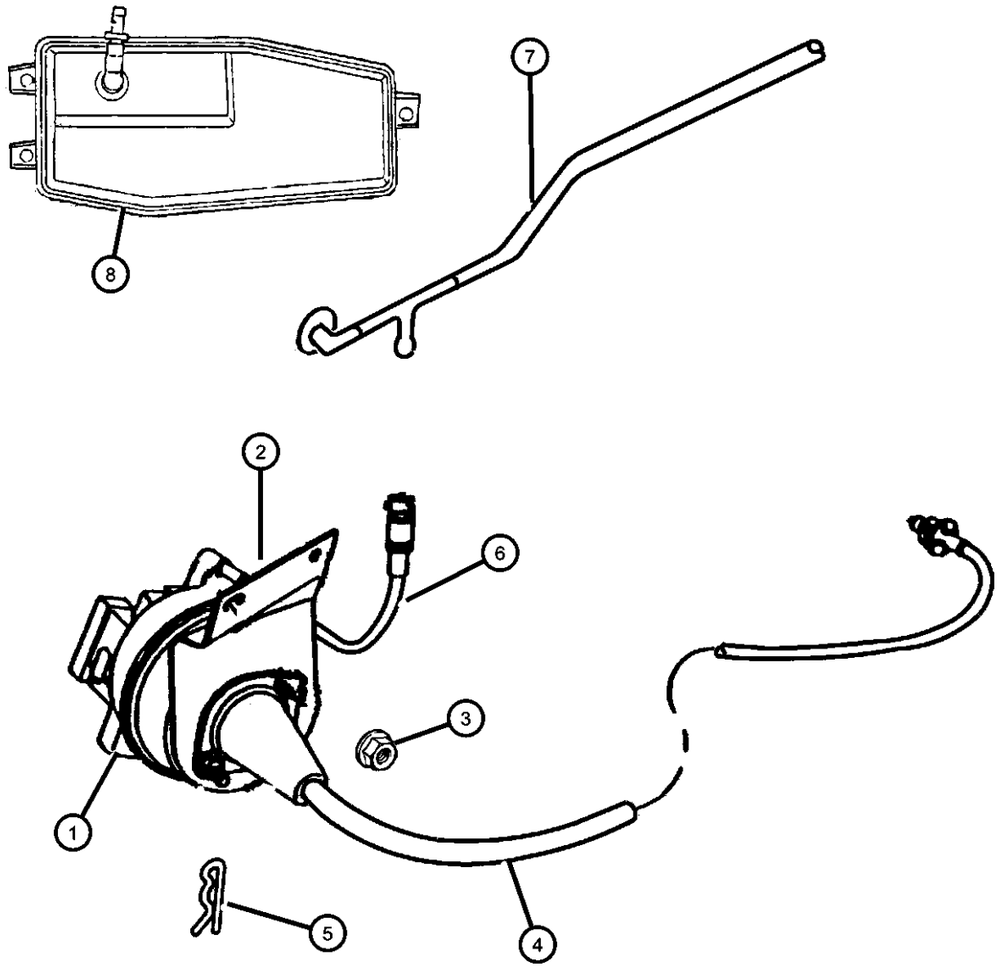

ITEM	PART NUMBER	QTY	LINE	SERIES	BODY	ENGINE	TRANS	TRIM	DESCRIPTION
Note; Sales Codes [EH0]= All 3.9L V-6 Gas Engines [EM0]= All 5.9L V-8 Gas Engines [EV0]= All 4.7L Gas Engines									
1									SERVO, Speed Control
	04669977	1				EV0			
		1				EM0			
		1				EH0			
2									BRACKET, Cruise Control Servo
	05015843AA	1				EM0			
		1				EV0			
		1				EH0			
3									LOCK NUT, M6x1.0x6
	06500274	1				EV0			
		1				EM0			
		1				EH0			
4									CABLE, Speed Control
	05015853AA	1				EM0			
	05015856AA	1				EH0			
	05015857AB	1				EV0			
5									CLIP, Cable to Servo Attach
	06025867	1				EV0			
		1				EM0			
		1				EH0			
6									HARNESS, Speed Control Vacuum
	05015845AA	1				EM0			
		1				EH0			
	05015846AA	1				EV0			
7	55055908AD	1							HARNESS, Vacuum
8	04886009AA	1							RESERVOIR, Vacuum

DAKOTA (AN)

SERIES	LINE	BODY	ENGINE	TRANSMISSION
L = Dakota (All)	1 = Dakota 2WD 5 = Dakota 4WD	61 = Regular Cab (112 WB) 31 = Club Cab (131 WB) 84 = Quad Cab (131 WB)	EPE = 2.5L 4 Cylinder EHC = 3.9L 6 Cylinder EML = 5.0L 8 Cylinder EVA = 4.7L Magnum V8 EP0 = All 2.5L EH0 = All 3.9L EM0 = All 5.9L EV0 = All 4.7L	DGK = 4 Speed Automatic 42RE DGT = 4 Speed Automatic 46RE DDC = 5 Speed HD Manual DDK = 5 Speed HD Manual DG4 = Multispeed Automatic 45RFE DG0 = All Automatic Transmissions DBB = All Manual Transmissions

Accelerator Pedal, All Engines
Figure 14-1110

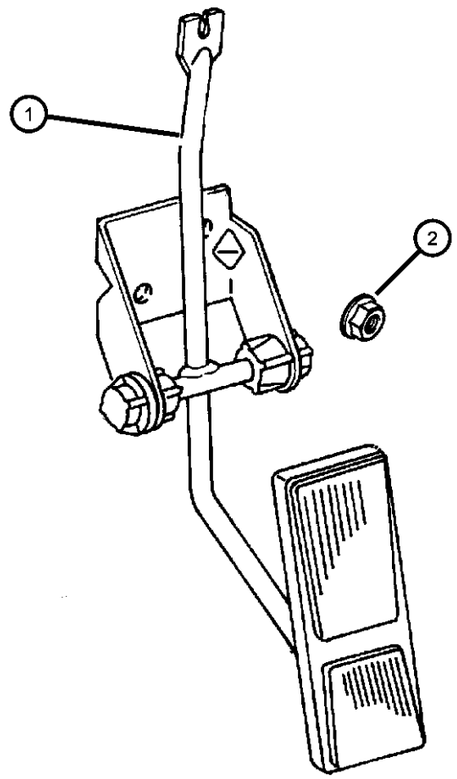

ITEM	PART NUMBER	QTY	LINE	SERIES	BODY	ENGINE	TRANS	TRIM	DESCRIPTION
1	52079304AC	1							PEDAL, Accelerator
2	06502843	2							NUT AND WASHER, Hex Nut-Coned Washer, M6 x 1.00

DAKOTA (AN)

SERIES	LINE	BODY	ENGINE	TRANSMISSION
L = Dakota (All)	1 = Dakota 2WD	61 = Regular Cab (112 WB)	EPE = 2.5L 4 Cylinder	DGK = 4 Speed Automatic 42RE
	5 = Dakota 4WD	31 = Club Cab (131 WB)	EHC = 3.9L 6 Cylinder	DGT = 4 Speed Automatic 46RE
		84 = Quad Cab (131 WB)	EML = 5.0L 8 Cylinder	DDC = 5 Speed HD Manual
			EVA = 4.7L Magnum V8	DDK = 5 Speed HD Manual
			EP0 = All 2.5L	DG4 = Multispeed Automatic 45RFE
			EH0 = All 3.9L	DG0 = All Automatic Transmissions
			EM0 = All 5.9L	DBB = All Manual Transmissions
			EV0 = All 4.7L	

Group - 16

Propeller Shafts and U-Joints

016-100 Propeller Shaft 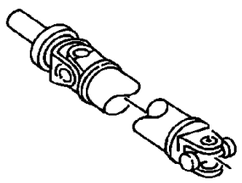			

Group - 16 Propeller Shafts and U-Joints

Illustration Title — Group-Fig. No.

Propeller Shaft

Shaft,Propeller,Rear.1 Piece-AN 1 ..... Fig. 16 - 110
Shaft,Propeller,Rear,2 Piece-AN 1 ..... Fig. 16 - 120
Shaft,Propeller,Front and Rear-AN 5 ..... Fig. 16 - 130

Shaft,Propeller,Rear.1 Piece-AN 1
Figure 16-110

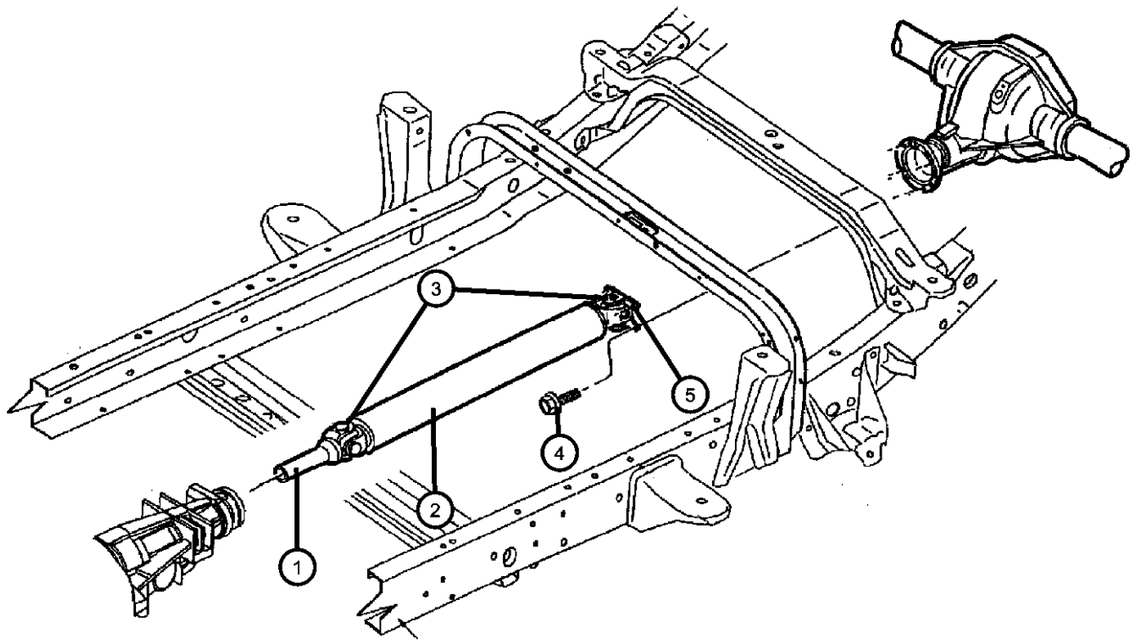

Note:Sales Code;
[DDC]=Transmission - 5- Speed Heavy Duty Manual
[DG0]= Transmissions - All Automatic
[DGT]=Transmissions - 4 Speed Automatic,46RE
[EH0]=Engines - All 3.9L V6 Gas
[EM0]=Engines - All 5.9L 8 Cylinder Gas
[EV0]=Engines - All 4.7L Gas

ITEM	PART NUMBER	QTY	LINE	SERIES	BODY	ENGINE	TRANS	TRIM	DESCRIPTION
1									YOKE, Drive Shaft
	05003633AA	1	1		31, 84	EM0	DGT		
		1	1		31, 84	EH0, EV0	DG0		
	05014040AA	1	1		61	EH0, EM0, EV0	DG0		
	05014044AA	1	1		61	EH0, EV0	DDC		
	05014058AA	1	1		61	EP0	DDK		
2									SHAFT, Drive, Rear 1-Piece
	52105600AA	1	1		61	EH0, EM0, EV0	DG0		
	52105602AB	1	1		61	EH0, EV0	DDC		
	52105603AB	1	1		31, 84	EH0, EV0	DG0		
	52105607AA	1	1		61	EP0	DDK		
	52105950AC	1	1		31, 84	EM0	DGT		Up To and Including 04-08-01
	52105950AD	1	1		31, 84	EM0	DGT		04-09-01 and After
3									U-JOINT
	05014733AA	2	1		61	EH0, EM0, EV0	DG0		Front or Rear
	V8014733AA								Mopar Alternative Universal Joint
		2	1		31, 84	EH0, EV0	DG0		Front or Rear
	V8014733AA								Mopar Alternative Universal Joint
		2	1		31, 84	EM0	DGT		Front or Rear
	V8014733AA								Mopar Alternative Universal Joint
		2	1		61	EH0, EV0	DDC		Front or Rear
	V8014733AA								Mopar Alternative Universal Joint
		2	1		61	EP0	DDK		Front or Rear
	V8014733AA								Mopar Alternative Universal Joint
4	06506497AA	4							BOLT, Hex Head, M12, to Rear Axle Flange, Drive Shaft
5									FLANGE, Driveshaft Yoke

DAKOTA (AN)

SERIES	LINE	BODY	ENGINE	TRANSMISSION
L = Dakota (All)	1 = Dakota 2WD 5 = Dakota 4WD	61 = Regular Cab (112 WB) 31 = Club Cab (131 WB) 84 = Quad Cab (131 WB)	EPE = 2.5L 4 Cylinder EHC = 3.9L 6 Cylinder EML = 5.0L 8 Cylinder EVA = 4.7L Magnum V8 EP0 = All 2.5L EH0 = All 3.9L EM0 = All 5.9L EV0 = All 4.7L	DGK = 4 Speed Automatic 42RE DGT = 4 Speed Automatic 46RE DDC = 5 Speed HD Manual DDK = 5 Speed HD Manual DG4 = Multispeed Automatic 45RFE DG0 = All Automatic Transmissions DBB = All Manual Transmissions

Shaft,Propeller,Rear.1 Piece-AN 1
Figure 16-110

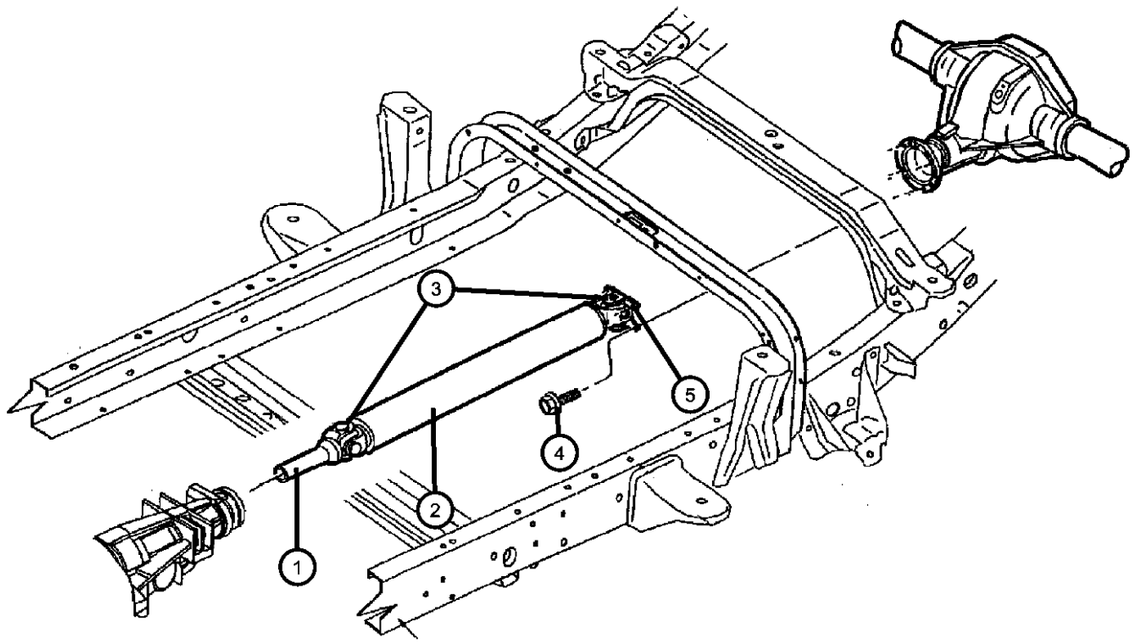

ITEM	PART NUMBER	QTY	LINE	SERIES	BODY	ENGINE	TRANS	TRIM	DESCRIPTION
	05015556AA	1	1		61	EH0, EM0, EV0	DG0		Rear
		1	1		61	EH0, EV0	DDC		Rear
		1	1		31, 84	EM0	DGT		Rear
		1	1		31, 84	EH0, EV0	DG0		Rear
		1	1		61	EP0	DDK		Rear

DAKOTA (AN)

SERIES	LINE	BODY	ENGINE	TRANSMISSION
L = Dakota (All)	1 = Dakota 2WD	61 = Regular Cab (112 WB)	EPE = 2.5L 4 Cylinder	DGK = 4 Speed Automatic 42RE
	5 = Dakota 4WD	31 = Club Cab (131 WB)	EHC = 3.9L 6 Cylinder	DGT = 4 Speed Automatic 46RE
		84 = Quad Cab (131 WB)	EML = 5.0L 8 Cylinder	DDC = 5 Speed HD Manual
			EVA = 4.7L Magnum V8	DDK = 5 Speed HD Manual
			EP0 = All 2.5L	DG4 = Multispeed Automatic 45RFE
			EH0 = All 3.9L	DG0 = All Automatic Transmissions
			EM0 = All 5.9L	DBB = All Manual Transmissions
			EV0 = All 4.7L	

Shaft,Propeller,Rear,2 Piece-AN 1
Figure 16-120

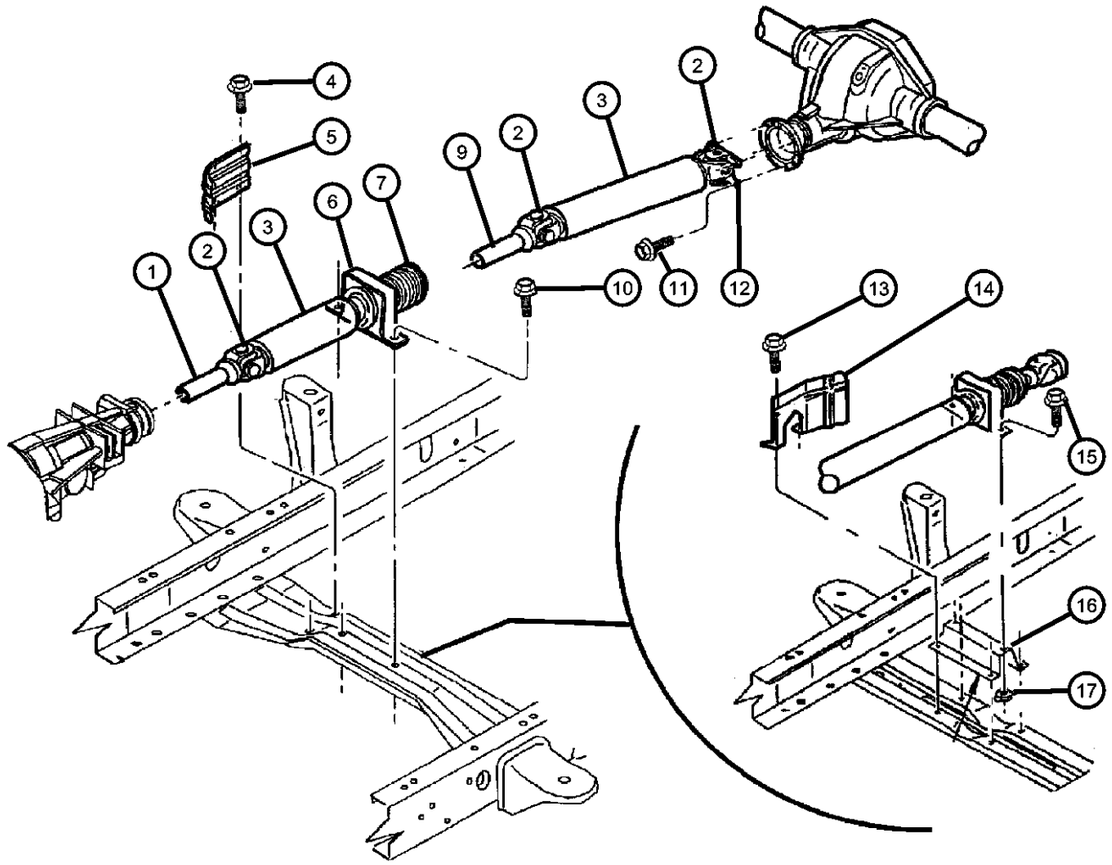

ITEM	PART NUMBER	QTY	LINE	SERIES	BODY	ENGINE	TRANS	TRIM	DESCRIPTION
Note:Sales Code;									
[DBB]=Transmissions - All Manual									
[DDC,DDK]=Transmission - 5- Speed Heavy Duty Manual									
[EH0]=Engines - All 3.9L V-6 Gas									
[EP0]=Engines - All 3.9L V6 Gas									
[EV0]=Engines - All 4.7L Gas									
1									YOKE, Drive Shaft
	05014044AA	1	1		31, 84	EH0, EV0	DDC		
	05014058AA	1	1		31, 84	EP0	DDK		
2									U-JOINT
	05014733AA	3	1		31, 84	EP0	DDK		
	V8014733AA								Mopar Alternative Universal Joint
		3	1		31, 84	EH0, EV0	DDC		
	V8014733AA								Mopar Alternative Universal Joint
3									SHAFT, Drive, Rear 2-Piece
	52105404AC	1	1		31, 84	EH0, EV0	DDC		Complete-With Center Bearing
	52105606AB	1	1		31, 84	EP0	DDK		Complete-With Center Bearing
4	06102153AA	2							SCREW, Tapping, M8x20, Heat Shield, Mounting
5	52019569	1	1		31	EH0, EP0	DBB		SHIELD, Heat
6									CENTER BEARING, Drive Shaft
	05014097AA	1	1		31, 84	EH0, EV0	DDC		With Shaft 52105404AB Up To and Including 02-22-01
	05080662AA	1	1		31, 84	EH0, EV0	DDC		With Shaft 52105404AC-02-23-01 and After
		1	1		31, 84	EP0	DDK		
7									BOOT, Driveshaft
	05080846AA	1	1		31, 84	EH0, EV0	DDC		
		1	1		31, 84	EP0	DDK		
-8									CLAMP
	05080880AA	1	1		31, 84	EH0, EV0	DDC		Boot, Front
		1	1		31, 84	EP0	DDK		Boot, Front
	05080881AA	1	1		31, 84	EH0, EV0	DDC		Boot, Rear
		1	1		31, 84	EP0	DDK		Boot, Rear
9									YOKE, Drive Shaft

DAKOTA (AN)

SERIES	LINE	BODY	ENGINE	TRANSMISSION
L = Dakota (All)	1 = Dakota 2WD	61 = Regular Cab (112 WB)	EPE = 2.5L 4 Cylinder	DGK = 4 Speed Automatic 42RE
	5 = Dakota 4WD	31 = Club Cab (131 WB)	EHC = 3.9L 6 Cylinder	DGT = 4 Speed Automatic 46RE
		84 = Quad Cab (131 WB)	EML = 5.0L 8 Cylinder	DDC = 5 Speed HD Manual
			EVA = 4.7L Magnum V8	DDK = 5 Speed HD Manual
			EP0 = All 2.5L	DG4 = Multispeed Automatic 45RFE
			EH0 = All 3.9L	DG0 = All Automatic Transmissions
			EM0 = All 5.9L	DBB = All Manual Transmissions
			EV0 = All 4.7L	

Shaft,Propeller,Rear,2 Piece-AN 1
Figure 16-120

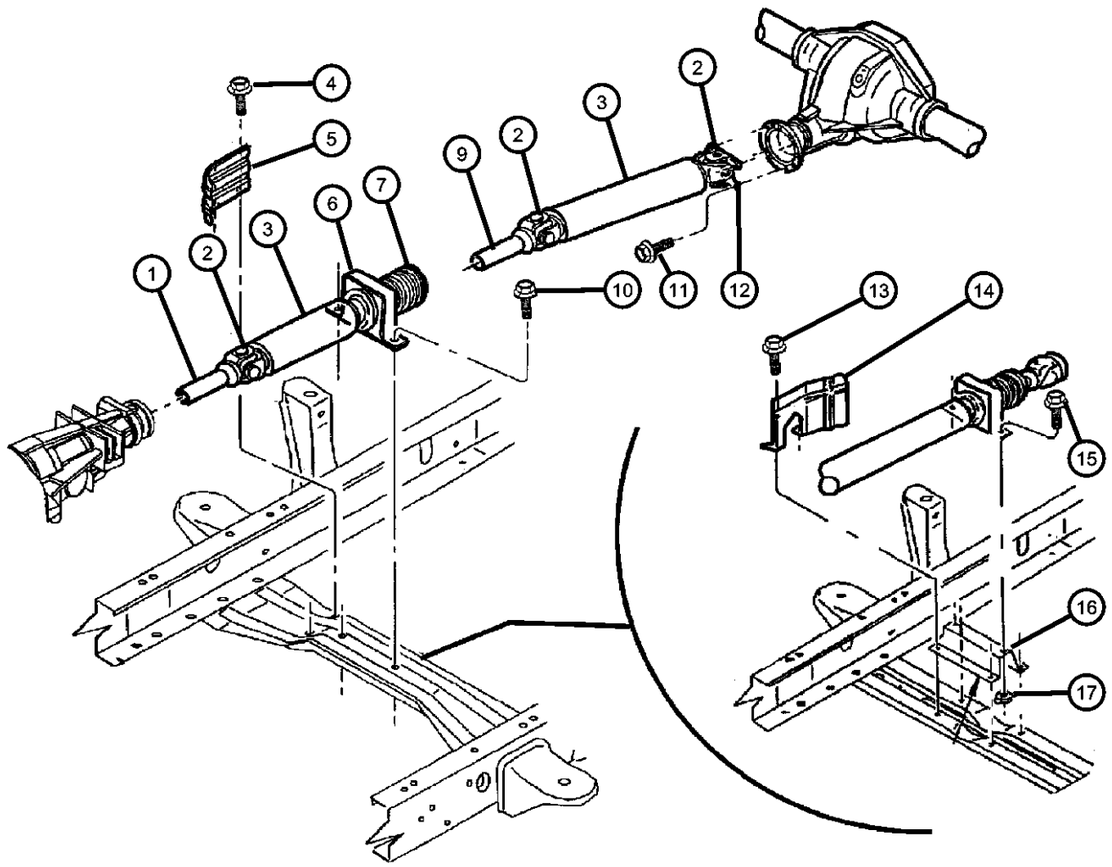

ITEM	PART NUMBER	QTY	LINE	SERIES	BODY	ENGINE	TRANS	TRIM	DESCRIPTION
	05014056AA	1	1		31, 84	EH0, EV0	DDC		With Shaft 52105404AB Up To and Including 02-22-01
	05080663AA	1	1		31, 84	EP0	DDK		
		1	1		31, 84	EH0, EV0	DDC		With Shaft 52105404AC-02-23-01 and After
10	06101063	2	1		31		DBB		SCREW AND WASHER, M10x1.5x45, Center Bearing, Mounting
11	06506497AA	4							BOLT, Hex Head, M12, Drive Shaft Flange to Rear Axle Flange, Mounting
12									FLANGE, Drive Shaft
	05015556AA	1	1		31, 84	EP0	DDK		
		1	1		31, 84	EH0, EV0	DDC		
13	06101063	4	1		84		DBB		SCREW AND WASHER, M10x1.5x45, Heat Shield, Mounting
14	52105387AA	1	1		84		DBB		SHIELD, Center Bearing, Heat
15	06101060	2	1		84		DBB		SCREW AND WASHER, Hex Head, M10x1.5x30, Center Bearing, Mounting
16	52105388AA	1	1		84		DBB		BRACKET, Drive Shaft Bearing, Center Bearing, Mounting
17	06101696	2	1						NUT, Center Bearing, Mounting

DAKOTA (AN)

SERIES	LINE	BODY	ENGINE	TRANSMISSION
L = Dakota (All)	1 = Dakota 2WD	61 = Regular Cab (112 WB)	EPE = 2.5L 4 Cylinder	DGK = 4 Speed Automatic 42RE
	5 = Dakota 4WD	31 = Club Cab (131 WB)	EHC = 3.9L 6 Cylinder	DGT = 4 Speed Automatic 46RE
		84 = Quad Cab (131 WB)	EML = 5.0L 8 Cylinder	DDC = 5 Speed HD Manual
			EVA = 4.7L Magnum V8	DDK = 5 Speed HD Manual
			EP0 = All 2.5L	DG4 = Multispeed Automatic 45RFE
			EH0 = All 3.9L	DG0 = All Automatic Transmissions
			EM0 = All 5.9L	DBB = All Manual Transmissions
			EV0 = All 4.7L	

Shaft,Propeller,Front and Rear-AN 5
Figure 16-130

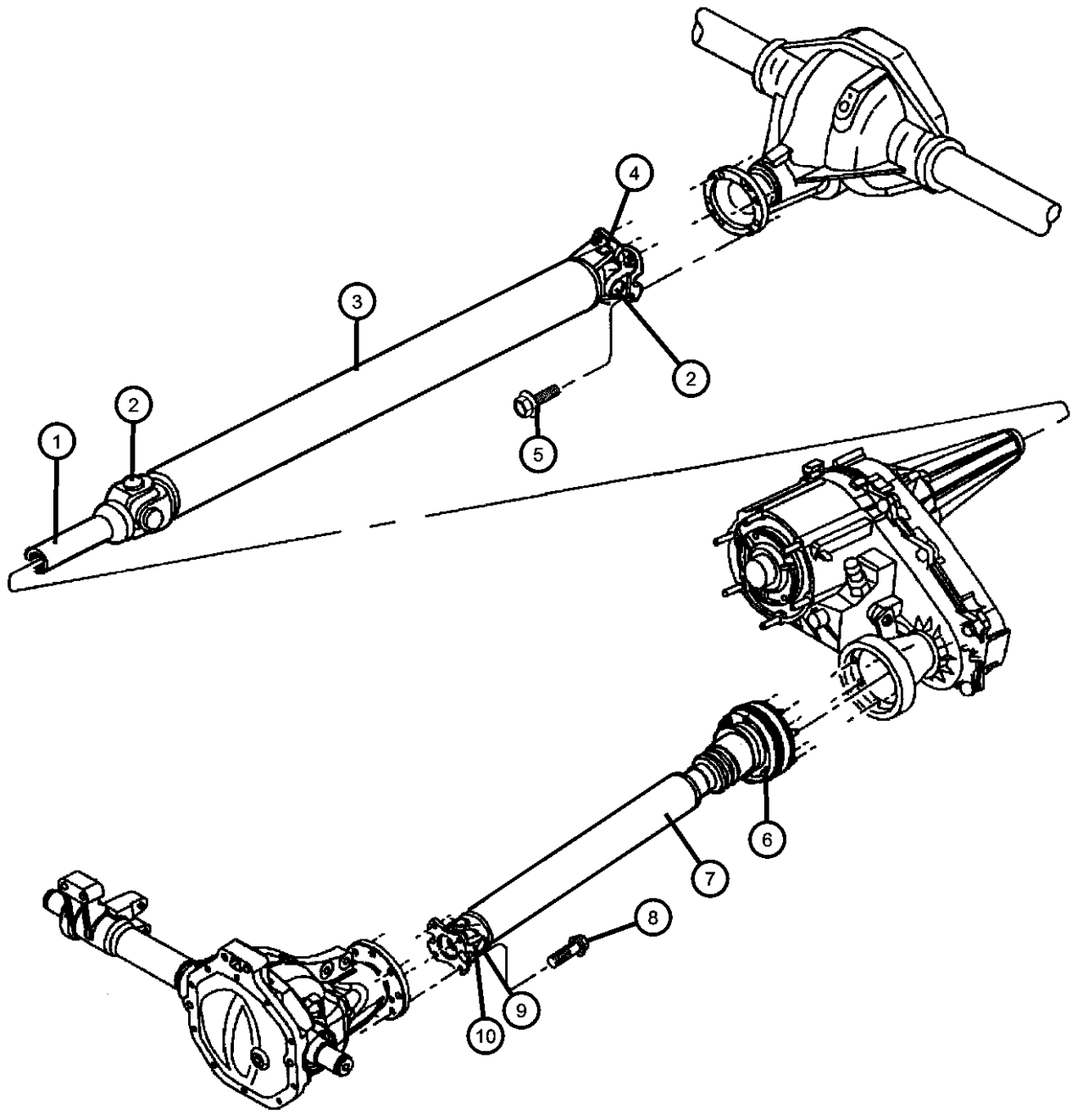

ITEM	PART NUMBER	QTY	LINE	SERIES	BODY	ENGINE	TRANS	TRIM	DESCRIPTION
Note:Sales Codes;									
[DBB]=Transmissions - All Manual									
[DDC]=Transmission - 5-Speed Heavy Duty Manual									
[DG0]=Transmissions - All Automatic									
[EH0]=Engines - All 3.9L 6 Cylinder Gas									
[EV0]=Engines - All 4.7L Gas									
1									YOKE, Drive Shaft
	05014043AA	1	5		61	EH0, EM0, EV0	DG0		
		1	5		31, 84	EH0, EM0, EV0	DG0		
		1	5		61	EH0, EV0	DDC		
		1	5		31, 84	EH0, EV0	DDC		
2									U-JOINT
	05014733AA	2	5		31, 84	EH0, EM0, EV0	DG0		Front or Rear
	V8014733AA								Mopar Alternative Universal Joint
		2	5		61	EH0, EM0, EV0	DG0		Front or Rear
	V8014733AA								Mopar Alternative Universal Joint
		2	5		61	EH0, EV0	DDC		Front or Rear
	V8014733AA								Mopar Alternative Universal Joint
		2	5		31, 84	EH0, EV0	DDC		Front or Rear
	V8014733AA								Mopar Alternative Universal Joint
3									SHAFT, Drive, Rear 1-Piece
	52105592AA	1	5		61	EH0, EM0, EV0	DG0		Rear
	52105598AA	1	5		31, 84	EH0, EM0, EV0	DG0		Rear
	52105599AB	1	5		61	EH0, EV0	DDC		Rear
	52105611AB	1	5		31, 84	EH0, EV0	DDC		Rear
4									FLANGE, Drive Shaft
	05015556AA	1	5		61	EH0, EM0, EV0	DG0		Drive Shaft
		1	5		31, 84	EH0, EM0, EV0	DG0		
		1	5		61	EH0, EV0	DDC		
		1	5		31, 84	EH0, EV0	DDC		

DAKOTA (AN)

SERIES	LINE	BODY	ENGINE	TRANSMISSION
L = Dakota (All)	1 = Dakota 2WD	61 = Regular Cab (112 WB)	EPE = 2.5L 4 Cylinder	DGK = 4 Speed Automatic 42RE
	5 = Dakota 4WD	31 = Club Cab (131 WB)	EHC = 3.9L 6 Cylinder	DGT = 4 Speed Automatic 46RE
		84 = Quad Cab (131 WB)	EML = 5.0L 8 Cylinder	DDC = 5 Speed HD Manual
			EVA = 4.7L Magnum V8	DDK = 5 Speed HD Manual
			EP0 = All 2.5L	DG4 = Multispeed Automatic 45RFE
			EH0 = All 3.9L	DG0 = All Automatic Transmissions
			EM0 = All 5.9L	DBB = All Manual Transmissions
			EV0 = All 4.7L	

Shaft,Propeller,Front and Rear-AN 5
Figure 16-130

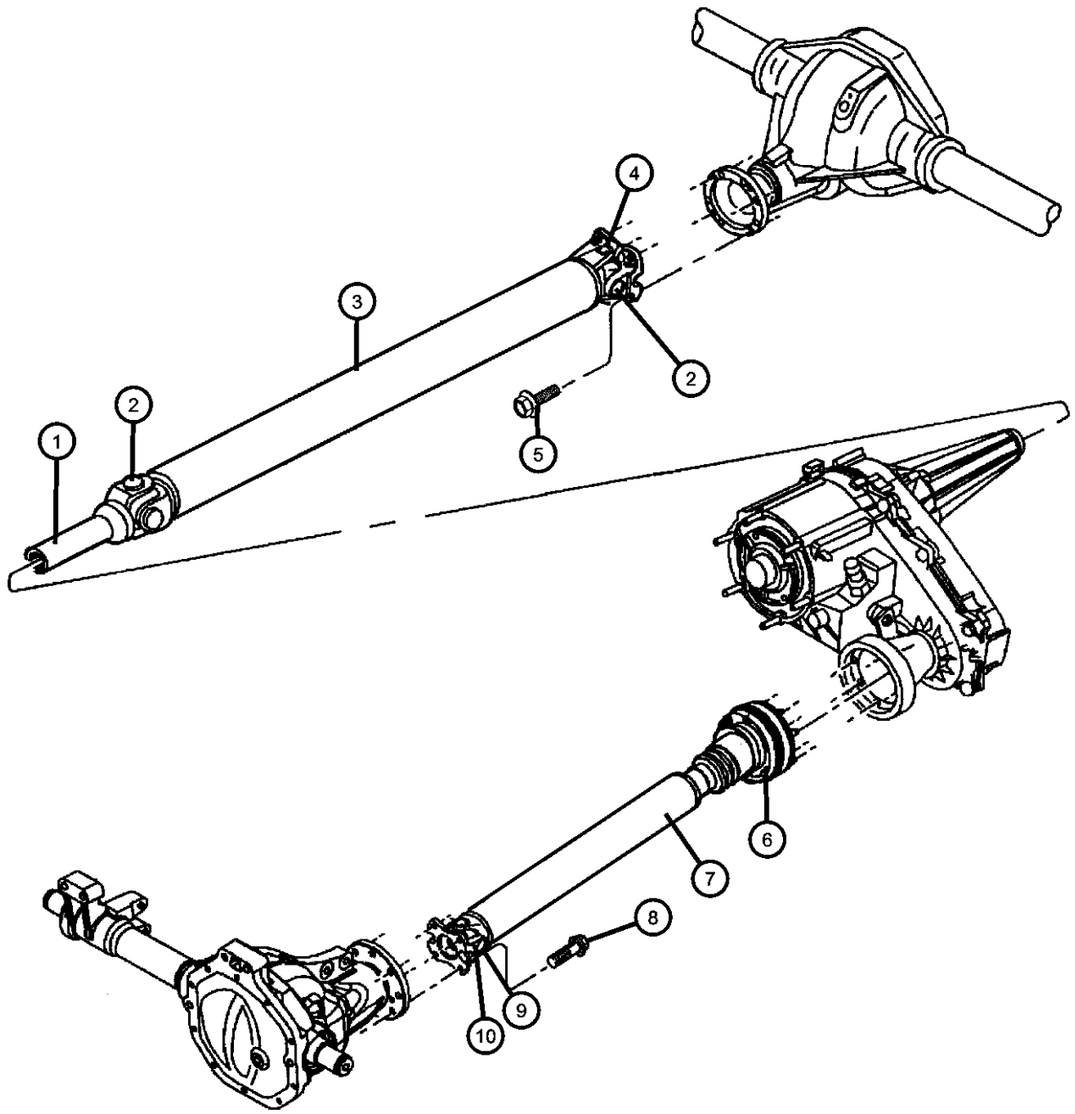

ITEM	PART NUMBER	QTY	LINE	SERIES	BODY	ENGINE	TRANS	TRIM	DESCRIPTION
5	06506497AA	4	5						BOLT, Hex Head, M12, to Rear Axle Flange, Drive Shaft
6									BOLT AND WASHER
	05015109AA	3	5				DG0		to Front Transfer Case Yoke, Drive Shaft
		3	5				DBB		to Front Transfer Case Yoke, Drive Shaft
7									SHAFT, Drive
	52105981AC	1	5				DBB		Front
	52105982AC	1	5				DG0		Front
8	06506497AA	4	5						BOLT, Hex Head, M12, to Front Axle Flange, Drive Shaft
9									U-JOINT
	04882793	1	5				DBB		Front
	v8012793AA								Mopar Alternative Universal Joint
		1	5				DG0		Front
	v8012793AA								Mopar Alternative Universal Joint
10									RING, U Joint
	J3207886	4	5				DBB		Front
		4	5				DG0		Front

DAKOTA (AN)

SERIES	LINE	BODY	ENGINE	TRANSMISSION
L = Dakota (All)	1 = Dakota 2WD	61 = Regular Cab (112 WB)	EPE = 2.5L 4 Cylinder	DGK = 4 Speed Automatic 42RE
	5 = Dakota 4WD	31 = Club Cab (131 WB)	EHC = 3.9L 6 Cylinder	DGT = 4 Speed Automatic 46RE
		84 = Quad Cab (131 WB)	EML = 5.0L 8 Cylinder	DDC = 5 Speed HD Manual
			EVA = 4.7L Magnum V8	DDK = 5 Speed HD Manual
			EP0 = All 2.5L	DG4 = Multispeed Automatic 45RFE
			EH0 = All 3.9L	DG0 = All Automatic Transmissions
			EM0 = All 5.9L	DBB = All Manual Transmissions
			EV0 = All 4.7L	

Group - 17

Rear Suspension

017-100 Rear Suspension 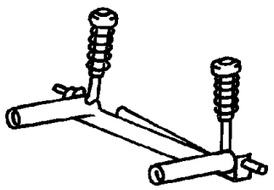	**017-200** Rear Stabilizer 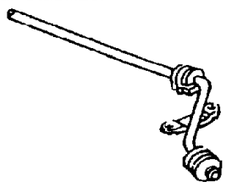		

Group - 17 Rear Suspension

Illustration Title — Group-Fig. No.

Rear Suspension

Suspension,Rear,Leaf Springs-AN 1 ..... Fig. 17 - 110
Suspension,Rear,Leaf Springs-AN 5 ..... Fig. 17 - 120

Rear Stabilizer

Stabilizer,Rear with Shock Absorbers ..... Fig. 17 - 210

Suspension,Rear,Leaf Springs-AN 1
Figure 17-110

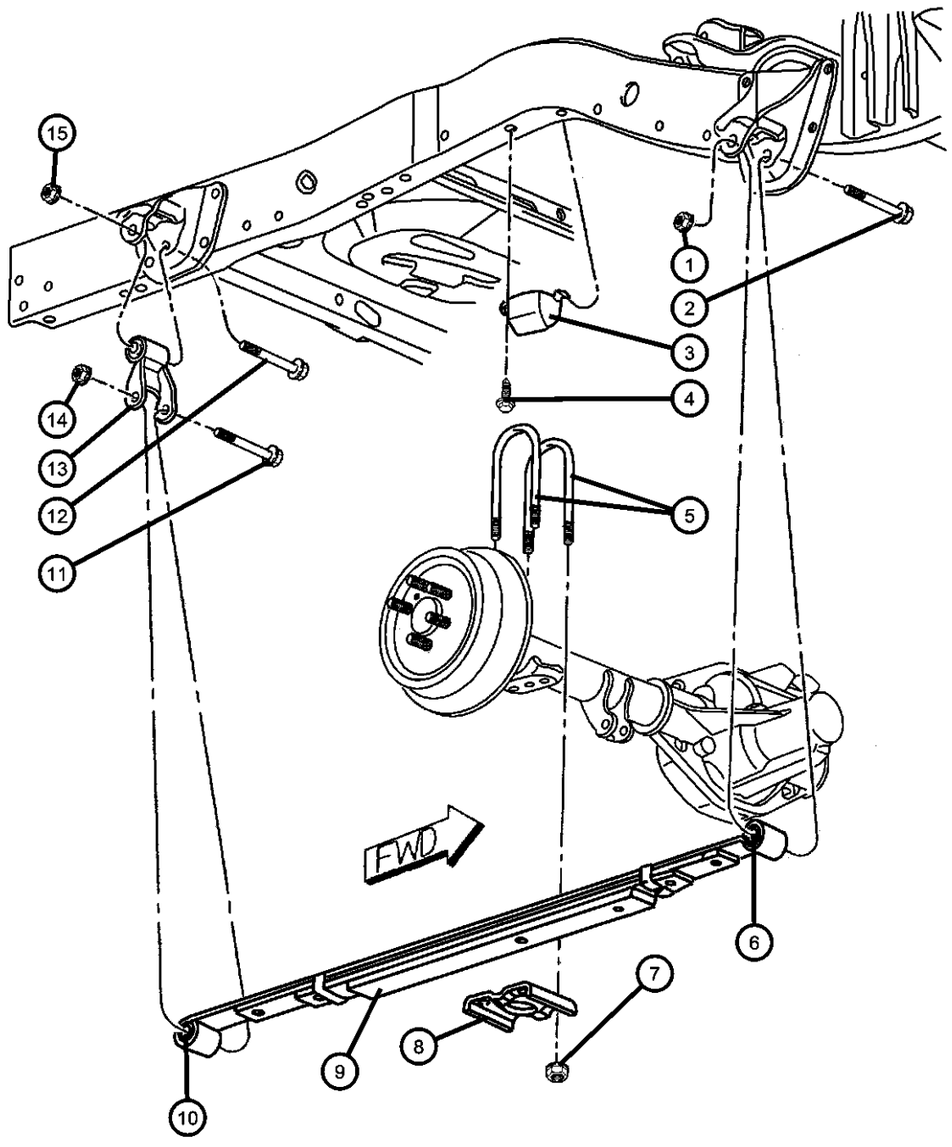

ITEM	PART NUMBER	QTY	LINE	SERIES	BODY	ENGINE	TRANS	TRIM	DESCRIPTION
Note:Sales Codes;									
[DRA]= Axle - Rear, Corporate 8.25									
[DRB]= Axle - Rear,Corporate 9.25 LD									
[ZAU] Through [ZUU]=Spring Sales Codes will be Found On Vehicle Identification Number [VIN] Sales Code Listing									
1	06502698	2	1						NUT, Hex Flange LockRear Spring Front Pivot
2	06505599AA	2	1						SCREW, Pilot PointRear Spring Front Pivot
3	52038682	2							BUMPER, Jounce
4	06503183	2							SCREW, Hex Head, M10x1.5x30, Jounce Bumper, Mounting
5									CLIP, Spring
	52106207AA	4	1						[DRA]
	52106224AA	4	1						[DRB]
6									BUSHING, Spring
	52038686	2	1		31, 61				Rear Spring Front Pivot
		2	1		84				Rear Spring Front Pivot
7	06502698	8							NUT, Hex Flange Lock, Clip Plate, Mounting
8									PLATE, Rear Spring Clip
	52039458AA	2	1						[DRB]
	52106276AA	2	1						[DRA]
9									SPRING, Rear Leaf
	52106360AC	1	1		31, 61				[ZAU,ZNU]
	52106361AC	1	1		31, 61				[ZAV,ZNV]
	52106362AC	1	1		31, 61				[ZBU,ZPU]
	52106363AC	1	1		31, 61				[ZBV,ZPV]
	52106364AC	1	1		31, 61				[ZCU,ZRU]
	52106365AC	1	1		31, 61				[ZCV,ZRV]
	52106437AD	1	1		31, 61				[ZDR,ZSR]
	52106764AE	1	1		84				[ZFU,ZUU]
10									BUSHING, Spring
	52038686	2	1		31, 61				Rear Spring Rear Pivot
		2	1		84				Rear Spring Rear Pivot
11	06505599AA	2	1						SCREW, Pilot PointRear Spring Rear Pivot

DAKOTA (AN)

SERIES	LINE	BODY	ENGINE	TRANSMISSION
L = Dakota (All)	1 = Dakota 2WD	61 = Regular Cab (112 WB)	EPE = 2.5L 4 Cylinder	DGK = 4 Speed Automatic 42RE
	5 = Dakota 4WD	31 = Club Cab (131 WB)	EHC = 3.9L 6 Cylinder	DGT = 4 Speed Automatic 46RE
		84 = Quad Cab (131 WB)	EML = 5.0L 8 Cylinder	DDC = 5 Speed HD Manual
			EVA = 4.7L Magnum V8	DDK = 5 Speed HD Manual
			EP0 = All 2.5L	DG4 = Multispeed Automatic 45RFE
			EH0 = All 3.9L	DG0 = All Automatic Transmissions
			EM0 = All 5.9L	DBB = All Manual Transmissions
			EV0 = All 4.7L	

Suspension,Rear,Leaf Springs-AN 1
Figure 17-110

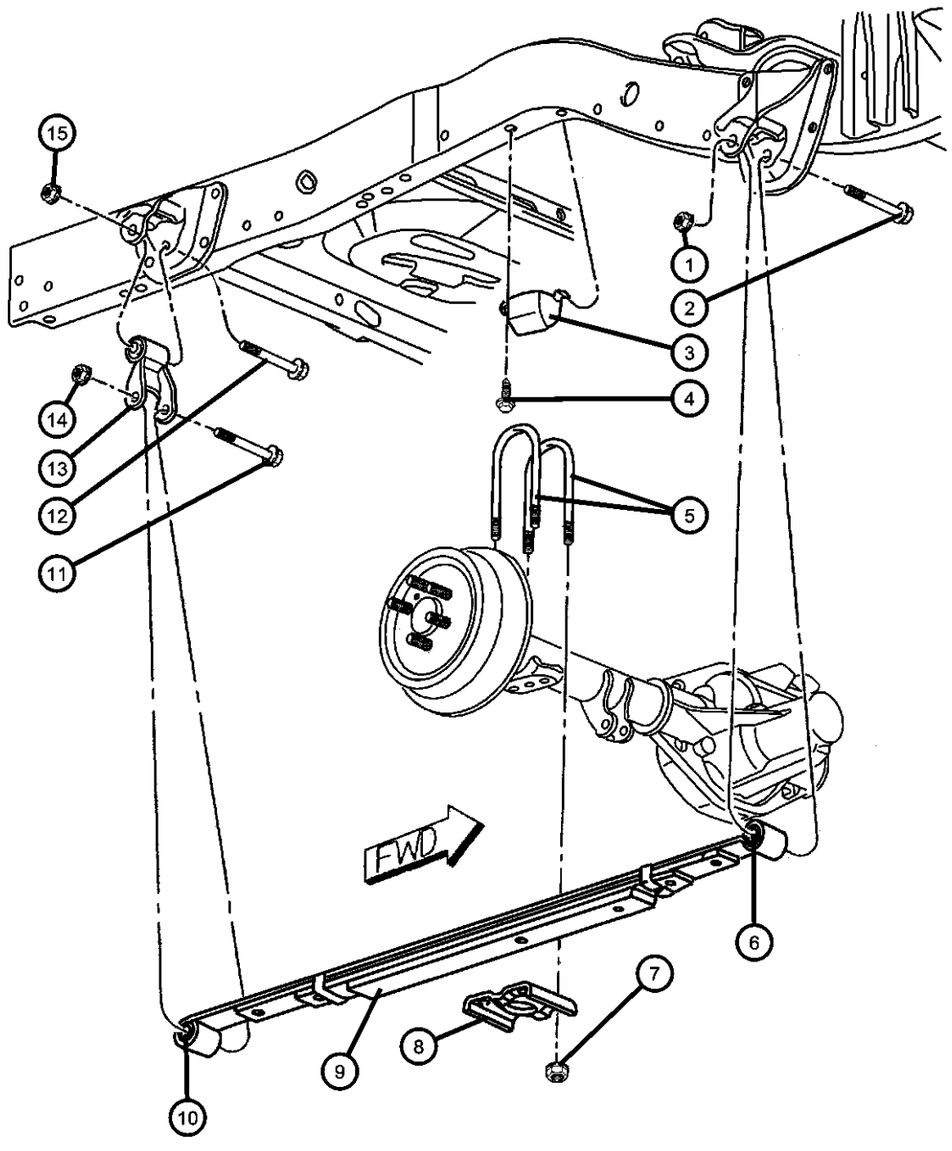

ITEM	PART NUMBER	QTY	LINE	SERIES	BODY	ENGINE	TRANS	TRIM	DESCRIPTION
12	06505599AA	2	1						SCREW, Pilot PointRear Spring Rear Pivot
13	52039204	2							SHACKLE, Spring
14	06502698	2	1						NUT, Hex Flange LockRear Spring Rear Pivot
15	06502698	2	1						NUT, Hex Flange LockRear Spring Rear Pivot

DAKOTA (AN)

SERIES	LINE	BODY	ENGINE	TRANSMISSION
L = Dakota (All)	1 = Dakota 2WD	61 = Regular Cab (112 WB)	EPE = 2.5L 4 Cylinder	DGK = 4 Speed Automatic 42RE
	5 = Dakota 4WD	31 = Club Cab (131 WB)	EHC = 3.9L 6 Cylinder	DGT = 4 Speed Automatic 46RE
		84 = Quad Cab (131 WB)	EML = 5.0L 8 Cylinder	DDC = 5 Speed HD Manual
			EVA = 4.7L Magnum V8	DDK = 5 Speed HD Manual
			EP0 = All 2.5L	DG4 = Multispeed Automatic 45RFE
			EH0 = All 3.9L	DG0 = All Automatic Transmissions
			EM0 = All 5.9L	DBB = All Manual Transmissions
			EV0 = All 4.7L	

Suspension,Rear,Leaf Springs-AN 5
Figure 17-120

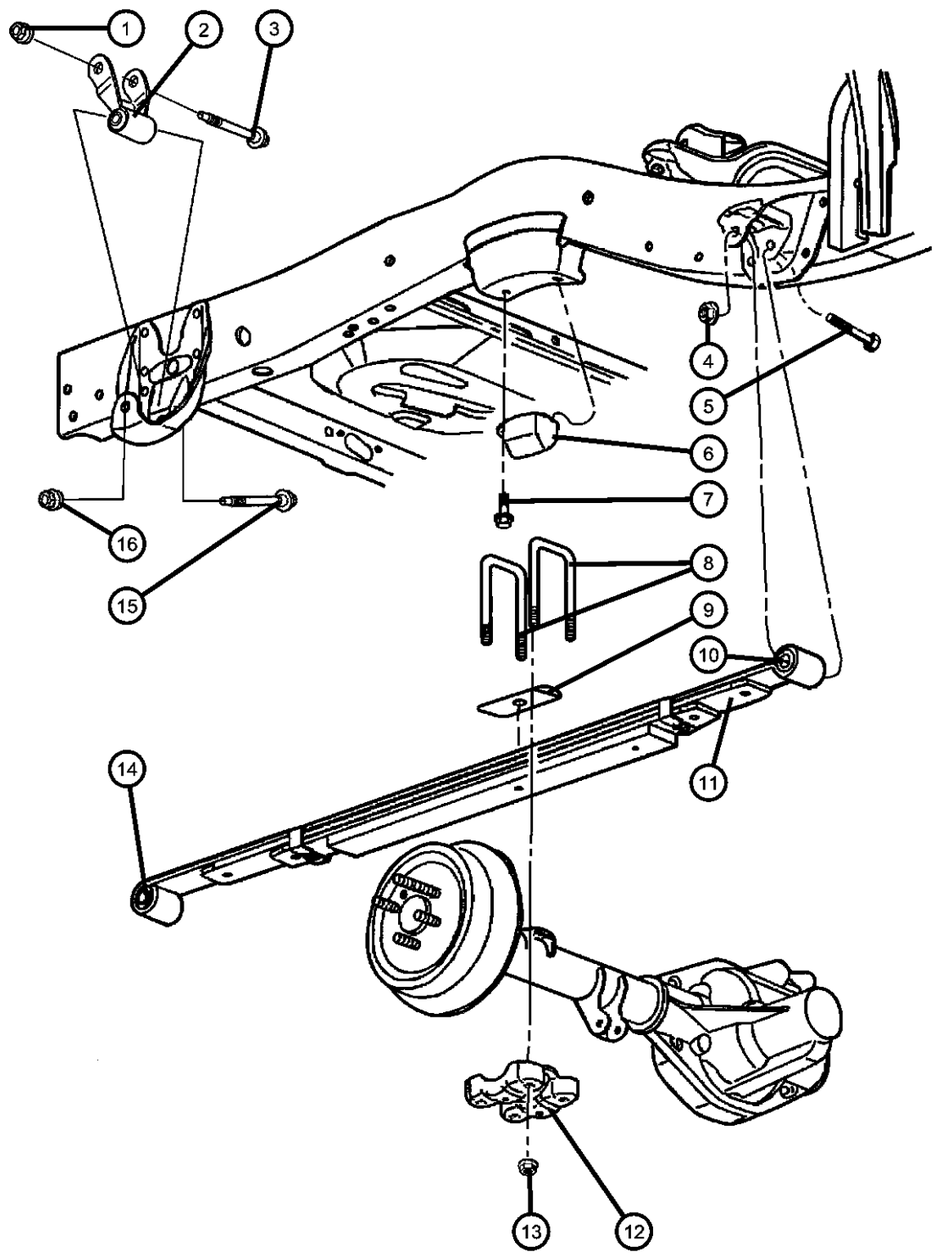

ITEM	PART NUMBER	QTY	LINE	SERIES	BODY	ENGINE	TRANS	TRIM	DESCRIPTION
Note:Sales Codes;									
[DRA]= Axle - Rear, Corporate 8.25									
[DRB]= Axle - Rear,Corporate 9.25 LD									
[ZDU] Through [ZVU]=Spring Sales Codes will be Found On Vehicle Identification Number [VIN] Sales Code Listing									
1	06502698	2	5						NUT, Hex Flange LockRear Spring Rear Pivot
2	52039204	2							SHACKLE, Spring
3	06505599AA	6							SCREW, Pilot PointRear Spring Rear Pivot
4	06502698	2	5						NUT, Hex Flange LockRear Spring Front Pivot
5	06505599AA	6							SCREW, Pilot PointRear Spring Front Pivot
6	52038682	2							BUMPER, Jounce
7	06503183	2							SCREW, Hex Head, M10x1.5x30, Jounce Bumper, Mounting
8									CLIP, Spring
	52038482	4	5						[DRB]
	52106206AA	4	5						[DRA]
9	52038217	2	5						SEAT, Spring
10									BUSHING, Spring
	52038686	1	5		31, 61				Rear Spring Front Pivot
		1	5		84				Rear Spring Front Pivot
11									SPRING, Rear Leaf
	52106743AC	1	5		31, 61				[ZDU,ZSU]
	52106744AC	1	5		31, 61				[ZDV,ZSV]
	52106745AC	1	5		31, 61				[ZEU,ZTU]
	52106746AC	1	5		31, 61				[ZEV,ZTV]
	52106765AE	1	5		84				[ZGU,ZVU]
12									PLATE, Rear Spring Clip
	52038457	2	5						[DRB]
	55024582AB	2	5						[DRA]
13	06502698	8							NUT, Hex Flange Lock
14									BUSHING, Spring
	52038687	1	5		31, 61				Rear Spring Rear Pivot
		1	5		84				Rear Spring Rear Pivot

DAKOTA (AN)

SERIES	LINE	BODY	ENGINE	TRANSMISSION
L = Dakota (All)	1 = Dakota 2WD	61 = Regular Cab (112 WB)	EPE = 2.5L 4 Cylinder	DGK = 4 Speed Automatic 42RE
	5 = Dakota 4WD	31 = Club Cab (131 WB)	EHC = 3.9L 6 Cylinder	DGT = 4 Speed Automatic 46RE
		84 = Quad Cab (131 WB)	EML = 5.0L 8 Cylinder	DDC = 5 Speed HD Manual
			EVA = 4.7L Magnum V8	DDK = 5 Speed HD Manual
			EP0 = All 2.5L	DG4 = Multispeed Automatic 45RFE
			EH0 = All 3.9L	DG0 = All Automatic Transmissions
			EM0 = All 5.9L	DBB = All Manual Transmissions
			EV0 = All 4.7L	

Suspension,Rear,Leaf Springs-AN 5
Figure 17-120

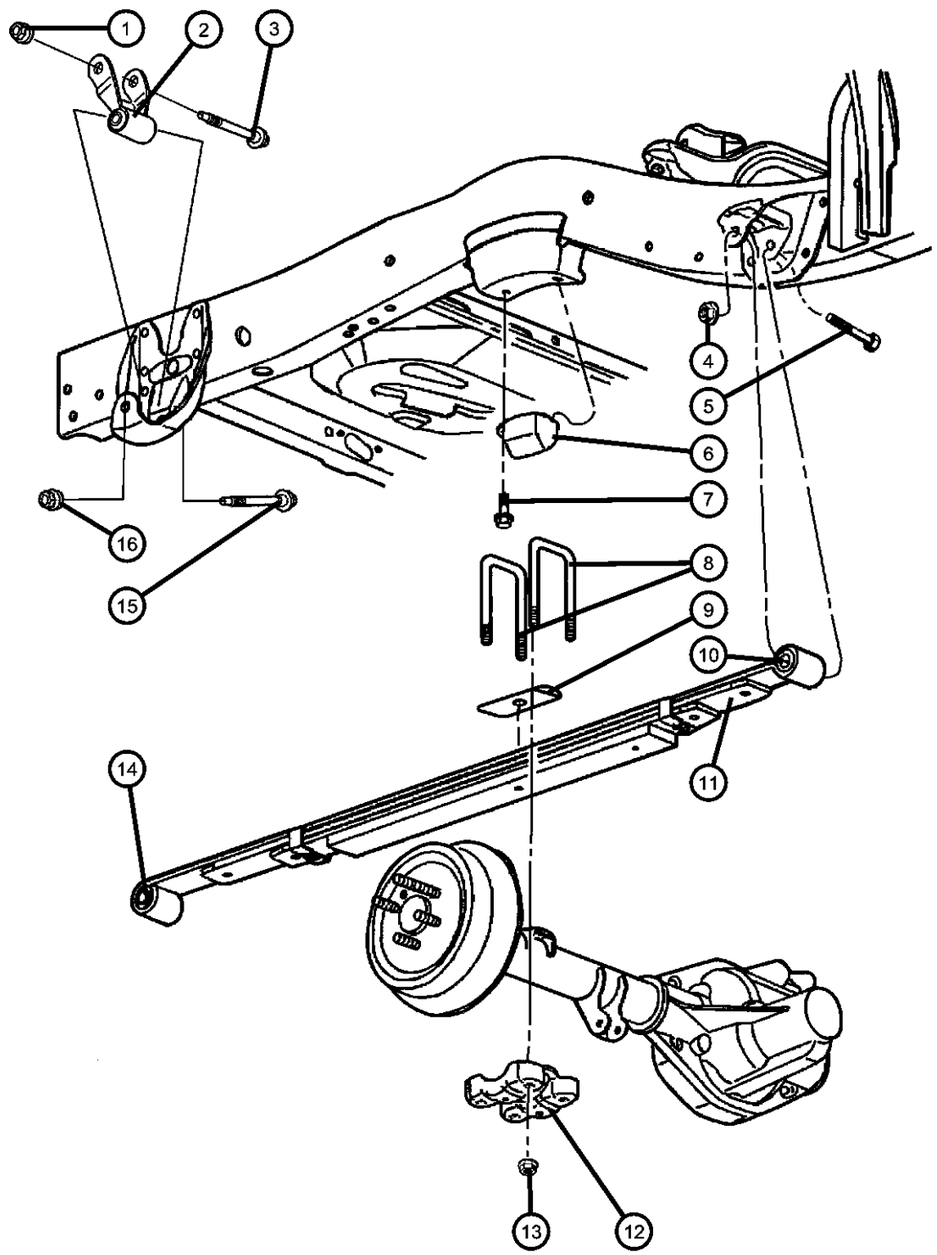

ITEM	PART NUMBER	QTY	LINE	SERIES	BODY	ENGINE	TRANS	TRIM	DESCRIPTION
15	06505599AA	6							SCREW, Pilot PointRear Spring Rear Pivot
16	06502698	2	5						NUT, Hex Flange LockRear Spring Rear Pivot

DAKOTA (AN)

SERIES	LINE	BODY	ENGINE	TRANSMISSION
L = Dakota (All)	1 = Dakota 2WD	61 = Regular Cab (112 WB)	EPE = 2.5L 4 Cylinder	DGK = 4 Speed Automatic 42RE
	5 = Dakota 4WD	31 = Club Cab (131 WB)	EHC = 3.9L 6 Cylinder	DGT = 4 Speed Automatic 46RE
		84 = Quad Cab (131 WB)	EML = 5.0L 8 Cylinder	DDC = 5 Speed HD Manual
			EVA = 4.7L Magnum V8	DDK = 5 Speed HD Manual
			EP0 = All 2.5L	DG4 = Multispeed Automatic 45RFE
			EH0 = All 3.9L	DG0 = All Automatic Transmissions
			EM0 = All 5.9L	DBB = All Manual Transmissions
			EV0 = All 4.7L	

Stabilizer,Rear with Shock Absorbers
Figure 17-210

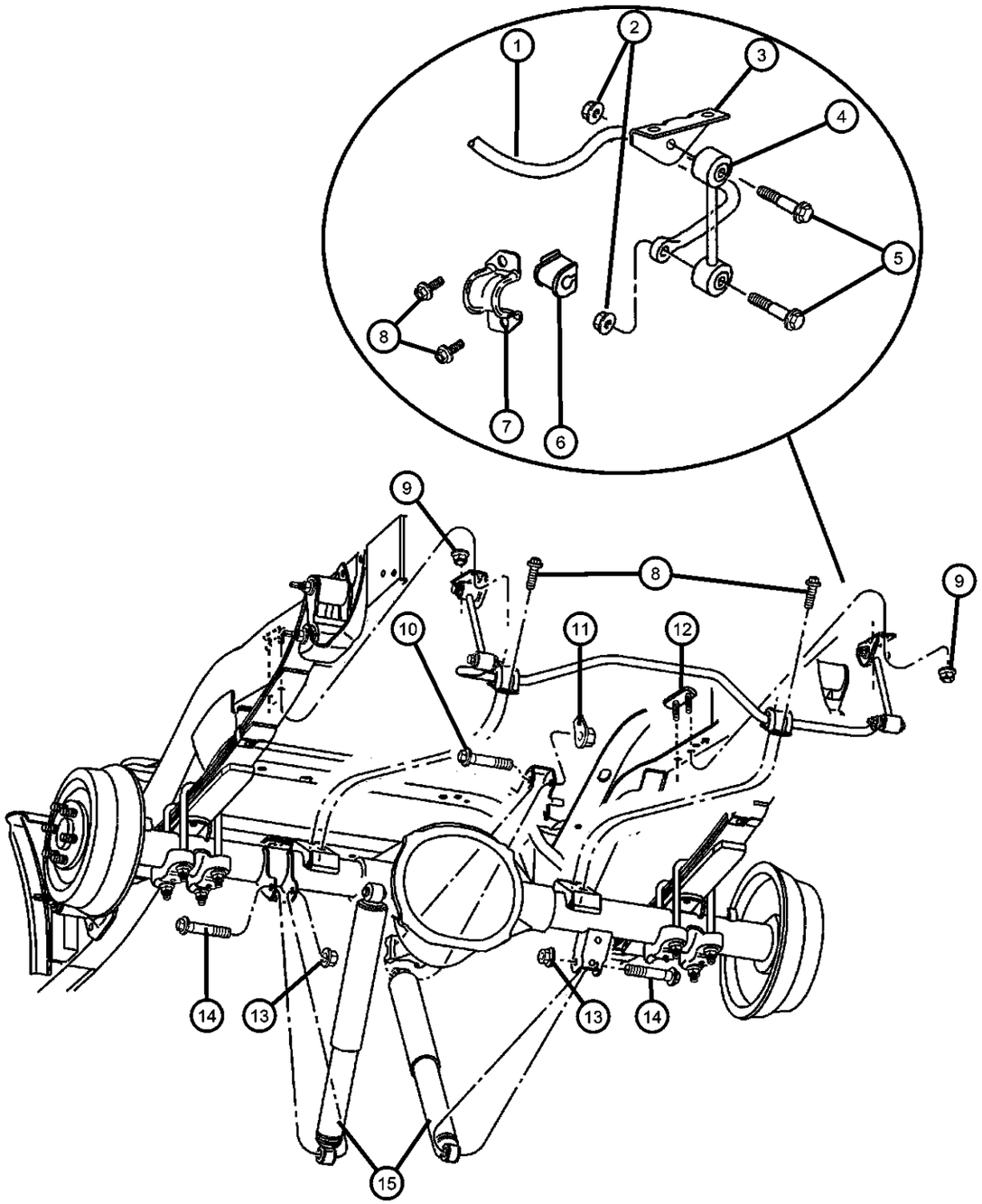

ITEM	PART NUMBER	QTY	LINE	SERIES	BODY	ENGINE	TRANS	TRIM	DESCRIPTION

Note:Sales Codes;
[SGB]=Shock Absorbers - Rear, Heavy Duty
[SGD]=Shock Absorbers - Rear, Extra Heaby Duty
[SHC]=Stabilizer Bar-Front and Rear
[SHD]=Stabilizer Bar- Rear Heavy Duty
[Z1M]=GVW Rating - 4700#
[Z1N]=GVW Rating - 4900#
[Z1P]=GVW Rating - 5000#
[Z1Q]=GVW Rating - 5350#
[Z1R]=GVW Rating - 5900#
[Z5M]=GVW Rating - 5400#
[Z5N]=GVW Rating - 5600#
[Z5P]=GVW Rating - 5900#
[ZAU] Through [ZUU]=Spring Sales Codes will be Found On Vehicle Identification Number [VIN] Sales Code Listing

ITEM	PART NUMBER	QTY	LINE	SERIES	BODY	ENGINE	TRANS	TRIM	DESCRIPTION
1									BAR, Rear Sway
	52106428AA	1	1		31, 61				[SHD]
	52106457AA	1							[SHC]
2	06502696	4							NUT, Hex Flange Lock, M14x1.50, Stabilizer Link to Bar, Mounting
3	52038968	2							BRACKET, Stabilizer Bar, Frame to Link
4	52106303AA	2							LINK, Sway Eliminator
5	06503726	4							SCREW, Shoulder, Stabilizer Link to Bar, Mounting
6									BUSHING, Stabilizer Bar
	52088125	2							SHC
	52106417AA	2	1		31, 61				SHD
7	52087865	2							RETAINER, Stabilizer Bar Grommet, Bushing
8	06503571	4							SCREW AND WASHER, M10x1.50x35, Stabilizer Bar Retainer
9	06502696	4							NUT, Hex Flange Lock, M14x1.50
10	06503712	2							SCREW, Shock Mounting, Upper
11	06504983AA	2							NUT AND RETAINER, Hex Flange Locking, M12x1.75, Shock Mounting, Upper
12	52038713	2							PLATE, Stabilizer Bar, with Studs
13	06502697	2							NUT, Hex Flange Lock, M12x1.75, Shock Mounting, Lower
14	06503712	2							SCREW, Shock Mounting, Lower

DAKOTA (AN)

SERIES	LINE	BODY	ENGINE	TRANSMISSION
L = Dakota (All)	1 = Dakota 2WD	61 = Regular Cab (112 WB)	EPE = 2.5L 4 Cylinder	DGK = 4 Speed Automatic 42RE
	5 = Dakota 4WD	31 = Club Cab (131 WB)	EHC = 3.9L 6 Cylinder	DGT = 4 Speed Automatic 46RE
		84 = Quad Cab (131 WB)	EML = 5.0L 8 Cylinder	DDC = 5 Speed HD Manual
			EVA = 4.7L Magnum V8	DDK = 5 Speed HD Manual
			EP0 = All 2.5L	DG4 = Multispeed Automatic 45RFE
			EH0 = All 3.9L	DG0 = All Automatic Transmissions
			EM0 = All 5.9L	DBB = All Manual Transmissions
			EV0 = All 4.7L	

Stabilizer,Rear with Shock Absorbers
Figure 17-210

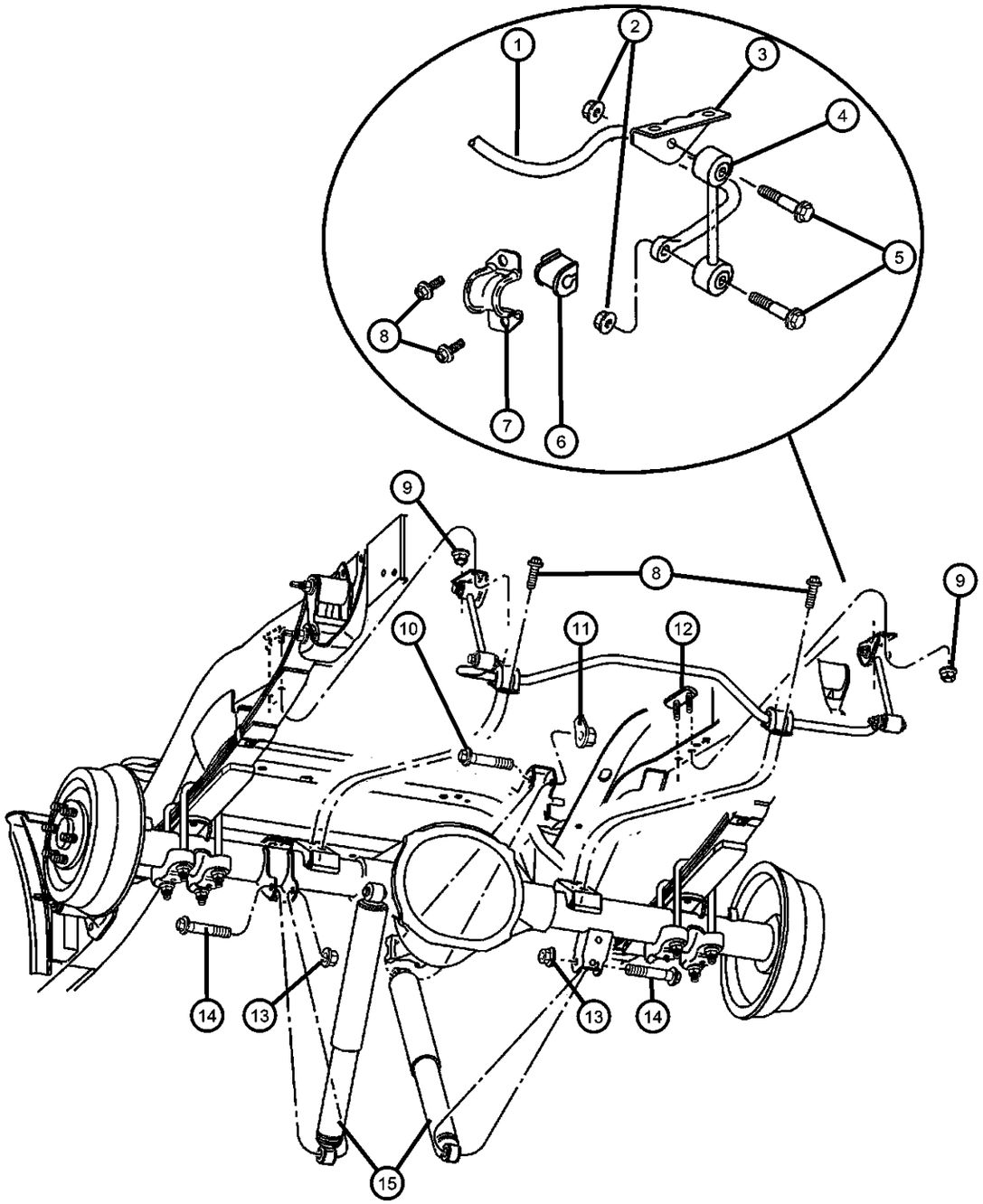

ITEM	PART NUMBER	QTY	LINE	SERIES	BODY	ENGINE	TRANS	TRIM	DESCRIPTION
15									SHOCK ABSORBER, Suspension, Rear
	52038559AB	2	1		31, 61				[SGB.Z1M.Z1N]
	0SGR5147								Rancho Shock
	0SG23319								Mopar V-Line Alternative Part
	52106337AB	2	1		31, 61				[SGD]
	0SGR5147								Rancho Shock
	0SG23319								Mopar V-Line Alternative Part
	52106758AC	2	1		84				[SGB]
	0SGR5248								Rancho Shock
	0SG23319								Mopar V-Line Alternative Part
	52106759AC	2	5		84				[SGB]
	0SGR5248								Rancho Shock
	0SG23321								Mopar V-Line Alternative Part
	52106927AB	2	1		31, 61				[SGB,Z1P,Z1Q]]
	0SGR5147								Rancho Shock
	0SG23319								Mopar V-Line Alternative Part
	52106928AB	2	5		31, 61				[SGB,Z5M,Z5N]]
	0SGR5248								Rancho Shock
	0SG23321								Mopar V-Line Alternative Part
	52106929AB	2	1		31, 61				[SGB,Z1R]
	0SGR5147								Rancho Shock
	0SG23319								Mopar V-Line Alternative Part
	52106955AB	2	5		31, 61				[SGB,Z5P]
	0SGR5248								Rancho Shock
	0SG23321								Mopar V-Line Alternative Part

DAKOTA (AN)

SERIES	LINE	BODY	ENGINE	TRANSMISSION
L = Dakota (All)	1 = Dakota 2WD	61 = Regular Cab (112 WB)	EPE = 2.5L 4 Cylinder	DGK = 4 Speed Automatic 42RE
	5 = Dakota 4WD	31 = Club Cab (131 WB)	EHC = 3.9L 6 Cylinder	DGT = 4 Speed Automatic 46RE
		84 = Quad Cab (131 WB)	EML = 5.0L 8 Cylinder	DDC = 5 Speed HD Manual
			EVA = 4.7L Magnum V8	DDK = 5 Speed HD Manual
			EP0 = All 2.5L	DG4 = Multispeed Automatic 45RFE
			EH0 = All 3.9L	DG0 = All Automatic Transmissions
			EM0 = All 5.9L	DBB = All Manual Transmissions
			EV0 = All 4.7L	

Group - 19

Steering

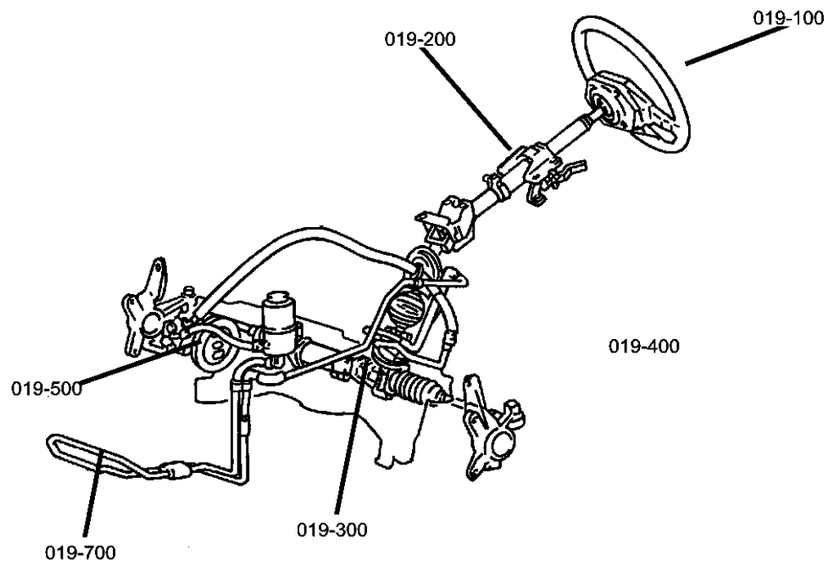

019-100 Steering Wheel 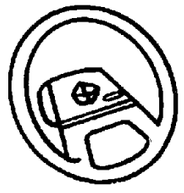	**019-200** Steering Column 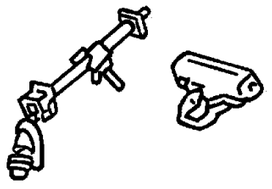	**019-300** Steering Gear 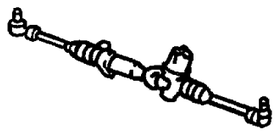	**019-500** Power Steering Pump 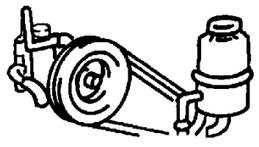
019-700 Power Steering Hoses 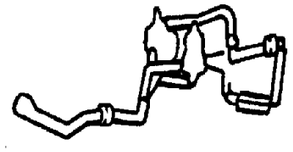			

Group - 19 Steering

Illustration Title — Group-Fig. No.

Steering Wheel
Wheel,Steering ..... Fig. 19 - 110

Steering Column
Column,Steering,Upper and Lower ..... Fig. 19 - 210

Steering Gear
Gear,Rack & Pinion Power Steering-AN1 ..... Fig. 19 - 310
Gear,Rack & Pinion Power Steering-AN5 ..... Fig. 19 - 320

Power Steering Pump
Pump,Mounting and Pulley,2.5L [EP0] Engine ..... Fig. 19 - 510
Pump,Mounting and Pulley,3.9L [EH0],5.9L [EM0] Engines ..... Fig. 19 - 520
Pump,Mounting and Pulley,4.7L [EV0] Engine ..... Fig. 19 - 530

Power Steering Hoses
Hoses,Power Steering,2.5L [EP0] Engine ..... Fig. 19 - 710
Hoses,Power Steering,3.9L [EH0] 5.9L [EM0] Engine ..... Fig. 19 - 720
Hoses,Power Steering,4.7L [EV0] Engine ..... Fig. 19 - 730

Wheel,Steering
Figure 19-110

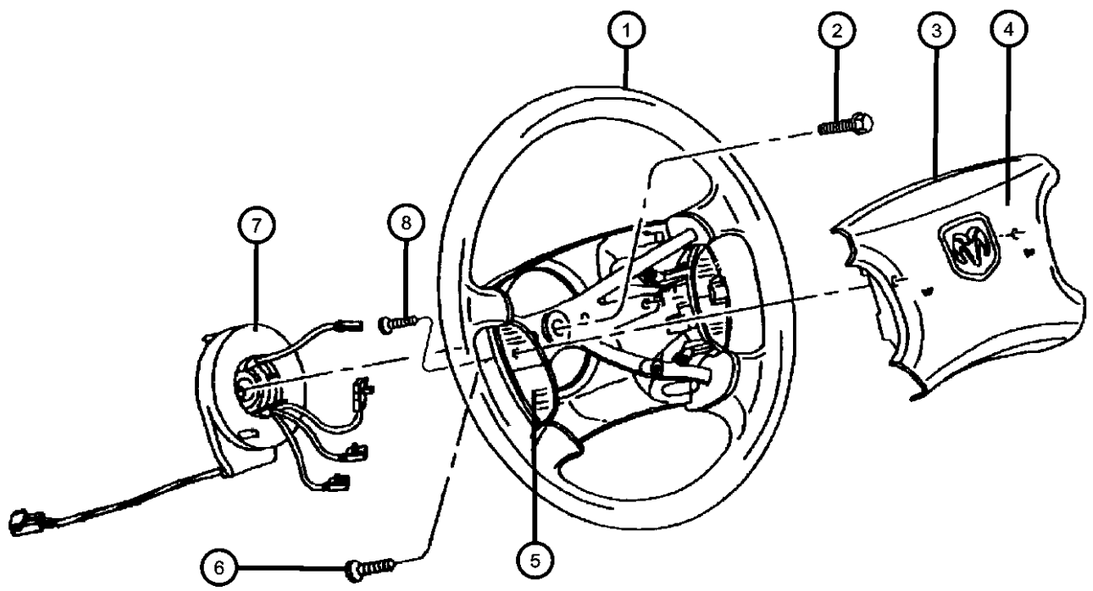

ITEM	PART NUMBER	QTY	LINE	SERIES	BODY	ENGINE	TRANS	TRIM	DESCRIPTION

Note:If Horn Switch is defective, you must replace the AIR BAG COVER WITH SWITCH and not the AIR BAG MODULE ASSEMBLY itself.
Note:Sales Codes;
[NHM]=Speed Control
[RDZ]= Audio Controls - Steering Wheel Mounted
[SCD]=Steering Wheel - Luxury
[SCG]=Steering Wheel - Leather Wrapped

1			WHEEL, Steering
	5GK28DX9AA	1	[SCD]
	5GW871X9AA	1	[SCG,NHM,RDZ]
	5GX60DX9AA	1	[SCD,NHM]
	5GX611X9AA	1	[SCG,NHM]
2	06505656AA	1	SCREW, Hex Flange Head, M10x1.5x35., Steering Wheel, Mounting
3	5GK53DX9AD	1	AIR BAG, Driver
4	0UP99DX9AA	1	COVER, Air Bag Module, Includes Horn Switch
5			SWITCH, Speed Control
	56021332AB	1	Right
	56021333AB	1	Left
6	06036149AA	4	SCREW, Pan Head, Speed Control Switch, Mounting
7	56045403AD	1	CLOCKSPRING
8	06506091AA	2	SCREW, M6x1x25, Air Bag, Mounting
-9			SWITCH, Remote Radio
	56045563AA	1	Radio, Right
	56045564AA	1	Radio, Left

DAKOTA (AN)

SERIES	LINE	BODY	ENGINE	TRANSMISSION
L = Dakota (All)	1 = Dakota 2WD	61 = Regular Cab (112 WB)	EPE = 2.5L 4 Cylinder	DGK = 4 Speed Automatic 42RE
	5 = Dakota 4WD	31 = Club Cab (131 WB)	EHC = 3.9L 6 Cylinder	DGT = 4 Speed Automatic 46RE
		84 = Quad Cab (131 WB)	EML = 5.0L 8 Cylinder	DDC = 5 Speed HD Manual
			EVA = 4.7L Magnum V8	DDK = 5 Speed HD Manual
			EP0 = All 2.5L	DG4 = Multispeed Automatic 45RFE
			EH0 = All 3.9L	DG0 = All Automatic Transmissions
			EM0 = All 5.9L	DBB = All Manual Transmissions
			EV0 = All 4.7L	

Column,Steering,Upper and Lower
Figure 19-210

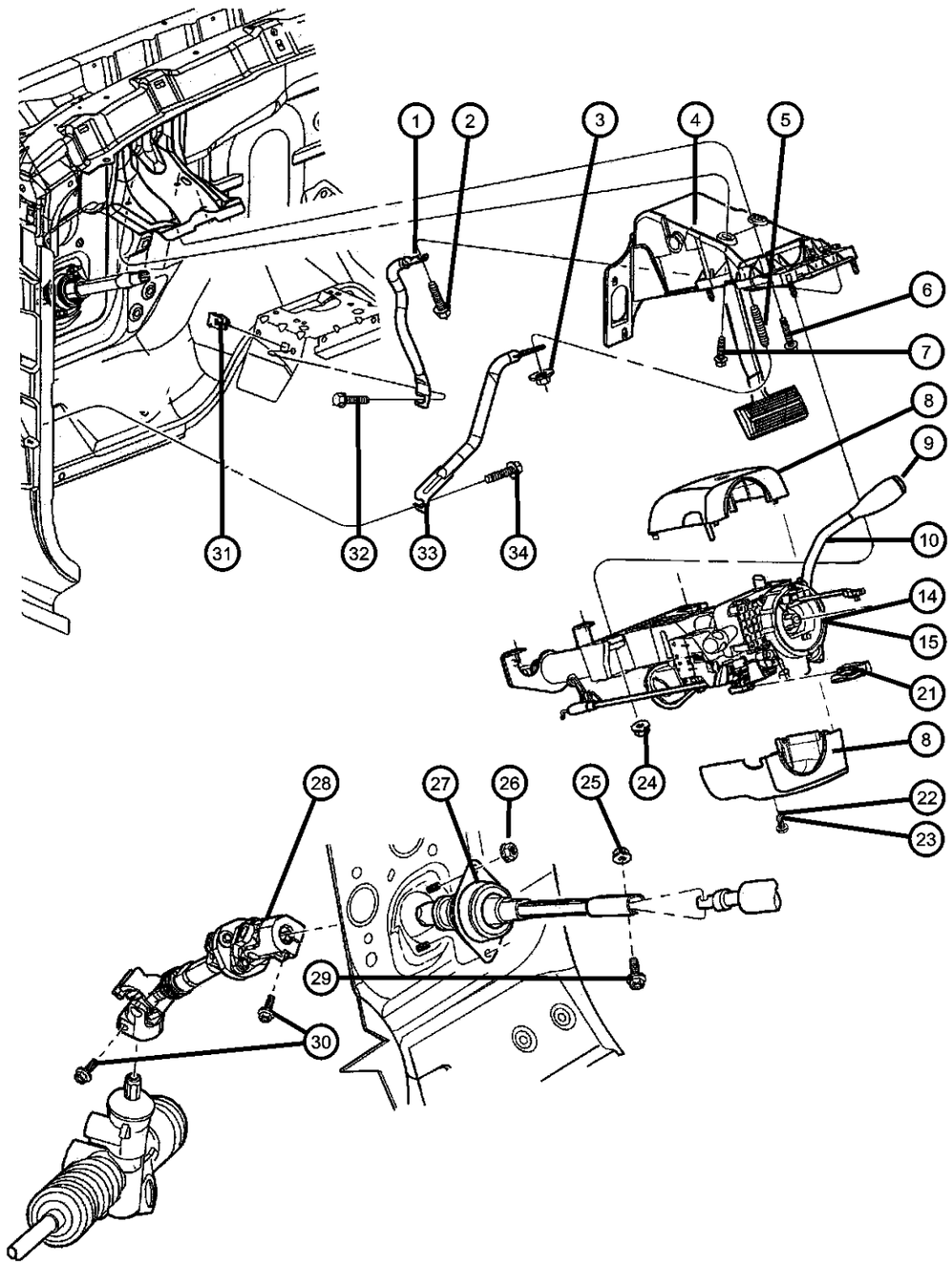

ITEM	PART NUMBER	QTY	LINE	SERIES	BODY	ENGINE	TRANS	TRIM	DESCRIPTION
Note;Sales Codes; [DBB]=Transmissions - All Manual [DG0]=Transmissions - All Automatic [SUA]= Steering Column - Tilt									
1	55351186AA	1							SUPPORT, Steering Column, Right
2	55351186AA	1							BOLT, Step Head, .437-14x1.125, (NOT SERVICED)
3	06503014	1							NUT AND WASHER, Hex, M6x1
4	55351185AB	1							BRACKET, Steering ColumnSup-port
5	06507188AA	1							STUD, M6x1.00mmx48.80mm
6	06507188AA	1							SCREW AND WASHER, Hex Flange Head, M8x1.25x55, (NOT SERVICED)
7	06507188AA	1							SCREW AND WASHER, M8x1.25x25, (NOT SERVICED)
8									SHROUD, Steering Column
	5GE09DX9AB	1					DG0		With [SUA], Upper And Lower
	5GE10DX9AC	1					DG0		Without [SUA], Upper And Lower
	5GW80DX9AC	1					DBB		Without [SUA], Upper And Lower
	5GW81DX9AC	1					DBB		With [SUA], Upper And Lower
9	05018975AA	1					DG0		SWITCH KIT, Overdrive Lockout
10	55351132AA	1					DG0		LEVER, Gearshift
-11	06504628	1					DG0		PIN, M5x50.00, Gearshift Lever Pivot
-12	04690242AB	1					DG0		SPRING, Gearshift Lever
-13	05018974AA	1					DG0		WIRING, Overdrive Lockout Switch
14									COLUMN, Steering, Non tilt
	04690665AD	1					DG0		
	04690666AD	1					DBB		
15									COLUMN, Steering, Tilt
	04690662AD	1					DG0		
	04690664AD	1					DBB		
-16	56045165AB	1							BRACKET, Mounting, Multifunction Switch
-17									BRACKET, Steering Column
	04690853AC	1					DG0		With Crash Capsules

DAKOTA (AN)

SERIES	LINE	BODY	ENGINE	TRANSMISSION
L = Dakota (All)	1 = Dakota 2WD 5 = Dakota 4WD	61 = Regular Cab (112 WB) 31 = Club Cab (131 WB) 84 = Quad Cab (131 WB)	EPE = 2.5L 4 Cylinder EHC = 3.9L 6 Cylinder EML = 5.0L 8 Cylinder EVA = 4.7L Magnum V8 EP0 = All 2.5L EH0 = All 3.9L EM0 = All 5.9L EV0 = All 4.7L	DGK = 4 Speed Automatic 42RE DGT = 4 Speed Automatic 46RE DDC = 5 Speed HD Manual DDK = 5 Speed HD Manual DG4 = Multispeed Automatic 45RFE DG0 = All Automatic Transmissions DBB = All Manual Transmissions

Column,Steering,Upper and Lower
Figure 19-210

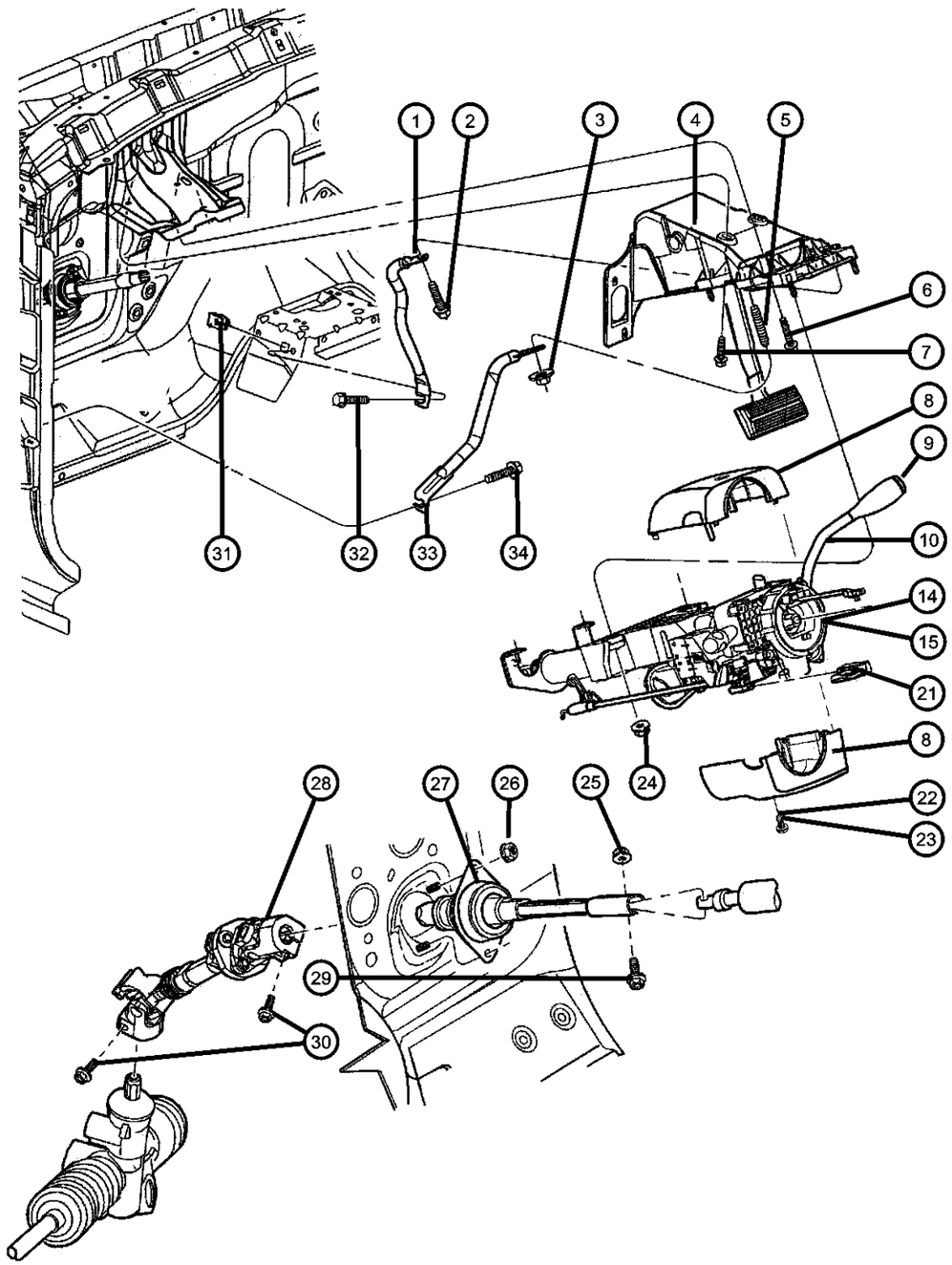

ITEM	PART NUMBER	QTY	LINE	SERIES	BODY	ENGINE	TRANS	TRIM	DESCRIPTION
		1					DBB		With Crash Capsules
-18	55351142AA	1					DG0		BRACKET, Gearshift, with or without [SUA]
-19	05018971AA	1					DG0		BOOT, Gearshift, with or without [SUA]
-20									LEVER ASSY, With bracket and cable
	04690734AE	1					DG0		Steering Column Tilt Latch
		1					DBB		
21	04690806AE	1							KNOB, TILT LEVER RELEASE
22	06034779	2							SCREW, Pan Head, .164-32x.50, Upper Shroud to Steering Column, Mounting
23	04470105	2							SCREW, Filister Head, #8-16x.25, Upper Shroud to Lower Shroud, Mounting
24	04470105	2							NUT AND WASHER, Hex, M8x1.25, (NOT SERVICED)
25									NUT, Flange Lock, M10x1.50
	06101510	2	1				DBB		
		1							
26		1							NUT AND WASHER, M6x1.00, (NOT SERVICED)
27									SHAFT, Intermediate
	55351207AB	1	5						Upper
	55351209AB	1	1						Upper
28									SHAFT, Intermediate
	55351208AB	1	5						Lower
	55351212AC	1	1						Lower
29	06503210	1							SCREW, Hex Flange Head, M10x1.5x35.Mounting
30	06506950AA	1							SCREW, as Required, Mounting
31	06101308	1							NUT, U, M6x1.00
32	06101308	1							SCREW AND WASHER, M6x1x25, (NOT SERVICED)
33	55351187AB	1							SUPPORT, Steering Column, Left
34	55351187AB	1							SCREW AND WASHER, M6x1x25, (NOT SERVICED)

DAKOTA (AN)

SERIES	LINE	BODY	ENGINE	TRANSMISSION
L = Dakota (All)	1 = Dakota 2WD	61 = Regular Cab (112 WB)	EPE = 2.5L 4 Cylinder	DGK = 4 Speed Automatic 42RE
	5 = Dakota 4WD	31 = Club Cab (131 WB)	EHC = 3.9L 6 Cylinder	DGT = 4 Speed Automatic 46RE
		84 = Quad Cab (131 WB)	EML = 5.0L 8 Cylinder	DDC = 5 Speed HD Manual
			EVA = 4.7L Magnum V8	DDK = 5 Speed HD Manual
			EP0 = All 2.5L	DG4 = Multispeed Automatic 45RFE
			EH0 = All 3.9L	DG0 = All Automatic Transmissions
			EM0 = All 5.9L	DBB = All Manual Transmissions
			EV0 = All 4.7L	

Gear,Rack & Pinion Power Steering-AN1
Figure 19-310

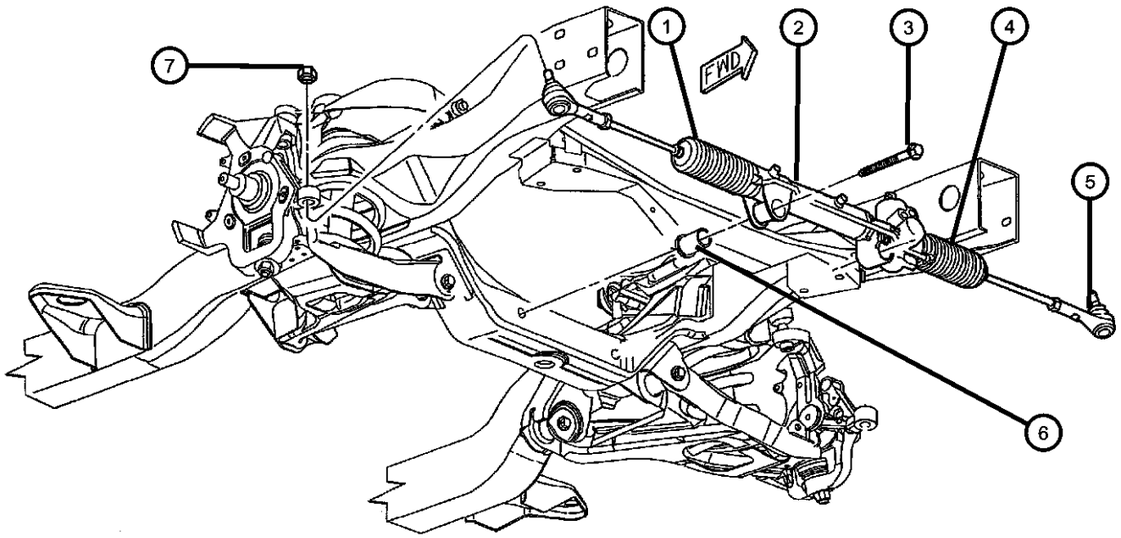

ITEM	PART NUMBER	QTY	LINE	SERIES	BODY	ENGINE	TRANS	TRIM	DESCRIPTION
1	05018278AA	1	1						BOOT, Steering GearRight
2	52106477AB	1	1						GEAR, Power Steering
3	06505225AA	2	1						SCREW AND WASHER, Hex Head, Rack and Pinion, Mounting
4	05018279AA	1	1						BOOT, Steering GearLeft
5	52106710AA	2	1						TIE ROD, SteeringRight or Left
6	52038783AB	2							BUSHING, Steering Gear, Rack and Pinion, Mounting
7	06505623AA	2							NUT, Hex Locking, M14x1.5, Tie Rod Stud, Mounting

DAKOTA (AN)

SERIES	LINE	BODY	ENGINE	TRANSMISSION
L = Dakota (All)	1 = Dakota 2WD	61 = Regular Cab (112 WB)	EPE = 2.5L 4 Cylinder	DGK = 4 Speed Automatic 42RE
	5 = Dakota 4WD	31 = Club Cab (131 WB)	EHC = 3.9L 6 Cylinder	DGT = 4 Speed Automatic 46RE
		84 = Quad Cab (131 WB)	EML = 5.0L 8 Cylinder	DDC = 5 Speed HD Manual
			EVA = 4.7L Magnum V8	DDK = 5 Speed HD Manual
			EP0 = All 2.5L	DG4 = Multispeed Automatic 45RFE
			EH0 = All 3.9L	DG0 = All Automatic Transmissions
			EM0 = All 5.9L	DBB = All Manual Transmissions
			EV0 = All 4.7L	

Gear,Rack & Pinion Power Steering-AN5
Figure 19-320

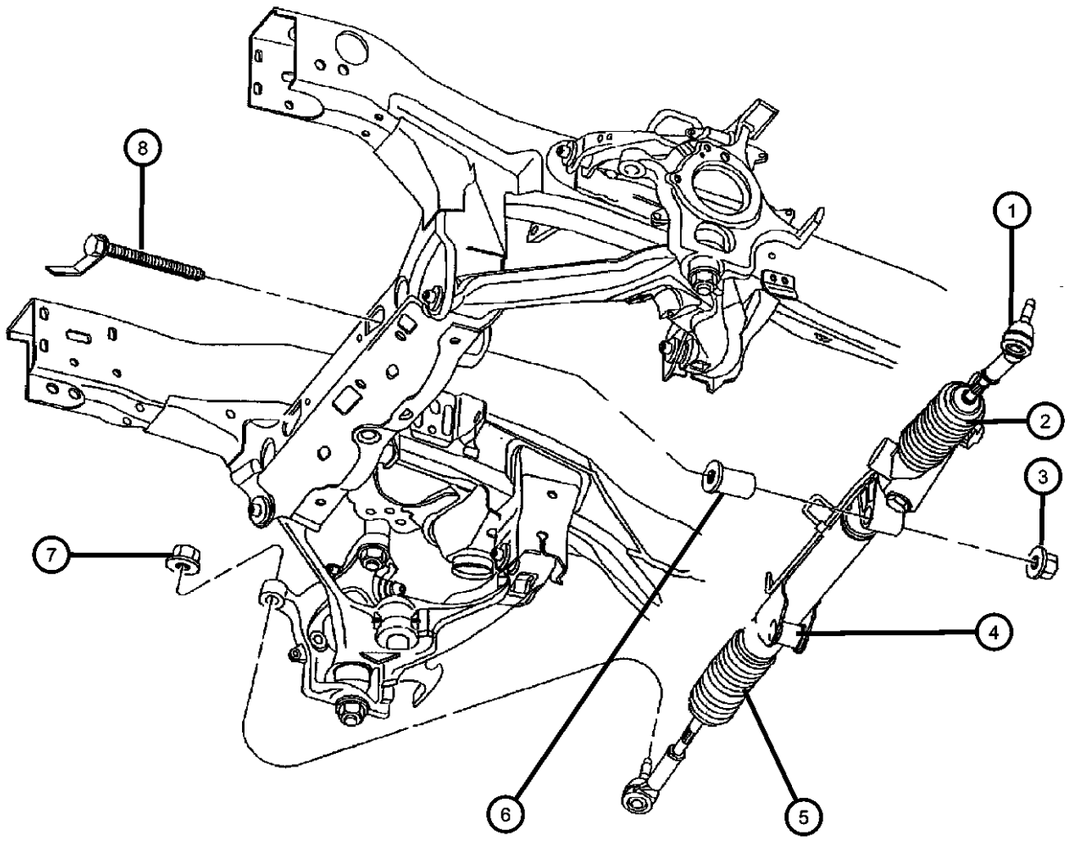

ITEM	PART NUMBER	QTY	LINE	SERIES	BODY	ENGINE	TRANS	TRIM	DESCRIPTION
1									TIE ROD, Steering
	52106544AA	1	5						Right
	52106545AA	1	5						Left
2	05018281AA	1	5						BOOT, Steering Gear, lLeft
3	06506387AA	2	5						NUT AND WASHER, Hex, Rack and Pinion, Mounting
4	52106405AC	1	5						GEAR, Power Steering
5	05018280AA	1	5						BOOT, Steering GearRight
6	52038783AB	2							BUSHING, Steering Gear, Rack and Pinion, Mounting
7	06505623AA	2							NUT, Hex Locking, M14x1.5, Tie Rod Stud, Mounting
8	06506558AA	2	5						SCREW AND WASHER, Hex Head

DAKOTA (AN)

SERIES	LINE	BODY	ENGINE	TRANSMISSION
L = Dakota (All)	1 = Dakota 2WD	61 = Regular Cab (112 WB)	EPE = 2.5L 4 Cylinder	DGK = 4 Speed Automatic 42RE
	5 = Dakota 4WD	31 = Club Cab (131 WB)	EHC = 3.9L 6 Cylinder	DGT = 4 Speed Automatic 46RE
		84 = Quad Cab (131 WB)	EML = 5.0L 8 Cylinder	DDC = 5 Speed HD Manual
			EVA = 4.7L Magnum V8	DDK = 5 Speed HD Manual
			EP0 = All 2.5L	DG4 = Multispeed Automatic 45RFE
			EH0 = All 3.9L	DG0 = All Automatic Transmissions
			EM0 = All 5.9L	DBB = All Manual Transmissions
			EV0 = All 4.7L	

Pump,Mounting and Pulley,2.5L [EP0] Engine
Figure 19-510

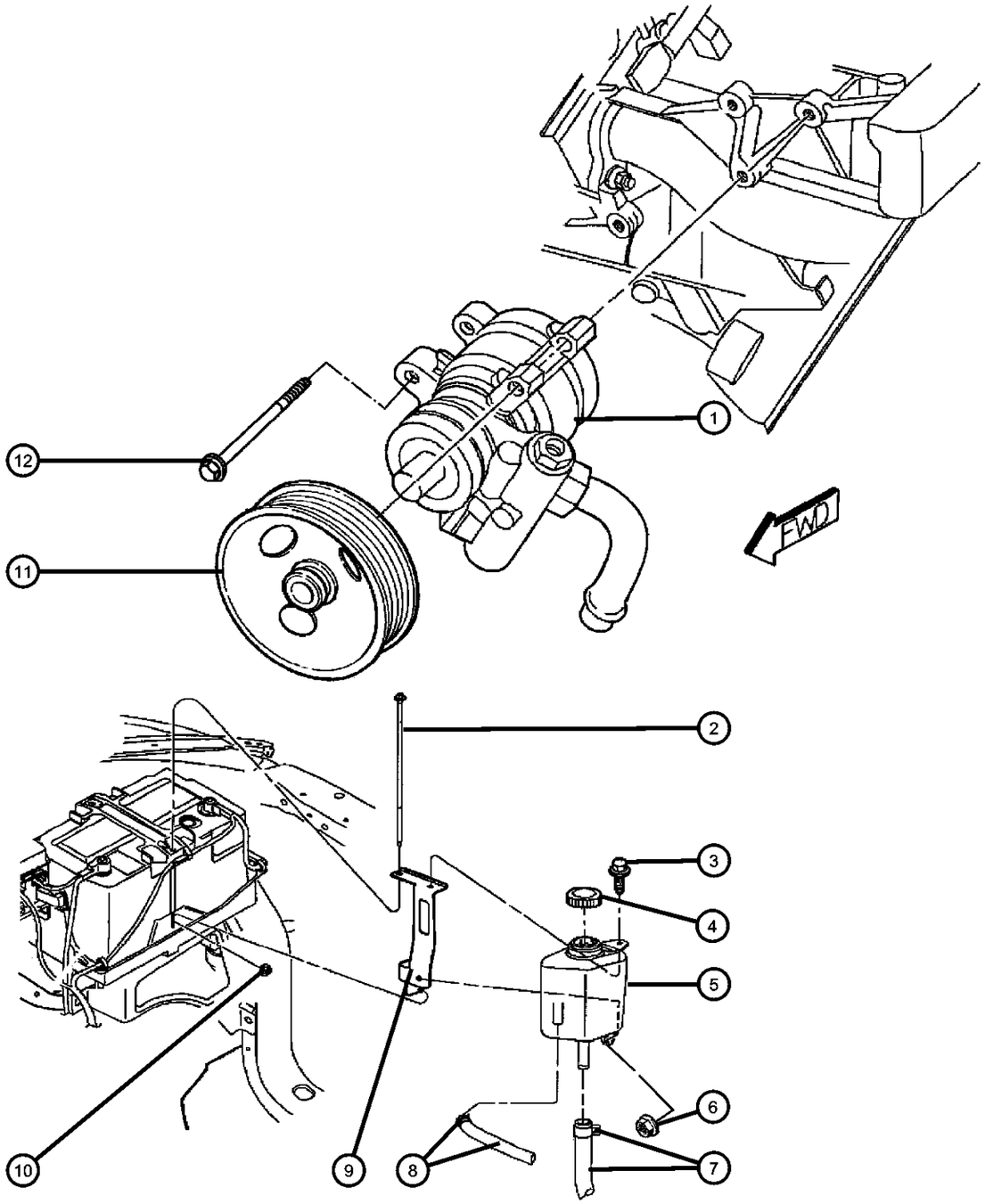

ITEM	PART NUMBER	QTY	LINE	SERIES	BODY	ENGINE	TRANS	TRIM	DESCRIPTION
Note:Sales Codes;									
[EP0]=Engines - All 2.5L 4 Cylinder Gas									
1	52038708AB	1				EP0			PUMP, Power Steering, without Pulley
2	55235142	2							STUD, Battery Hold Down, Power Steering Reservior Mounting Bracket
3	06101718	2				EP0			SCREW AND WASHER, Oval Head, M6x1x25
4	52039424	1				EP0			CAP, Power Steering Pump
5	52006395	1				EP0			RESERVOIR, Power Steering Pump
6	06100048	AR				EP0			NUT, Hex, M6x1.00
7	52106716AA	1				EP0			HOSE, Pump Supply
8	52106713AB	1				EP0			HOSE, Power Steering Return
9	52106712AA	1				EP0			BRACKET, Power Steering Reservoir
10	06100048	AR				EP0			NUT, Hex, M6x1.00
11	53010258AB	1				EP0			PULLEY, Power Steering Pump
12	06502425	3				EP0			SCREW AND WASHER, Hex Head, M8x1.25x95, Power Steering Pump, Mounting

DAKOTA (AN)

SERIES	LINE	BODY	ENGINE	TRANSMISSION
L = Dakota (All)	1 = Dakota 2WD	61 = Regular Cab (112 WB)	EPE = 2.5L 4 Cylinder	DGK = 4 Speed Automatic 42RE
	5 = Dakota 4WD	31 = Club Cab (131 WB)	EHC = 3.9L 6 Cylinder	DGT = 4 Speed Automatic 46RE
		84 = Quad Cab (131 WB)	EML = 5.0L 8 Cylinder	DDC = 5 Speed HD Manual
			EVA = 4.7L Magnum V8	DDK = 5 Speed HD Manual
			EP0 = All 2.5L	DG4 = Multispeed Automatic 45RFE
			EH0 = All 3.9L	DG0 = All Automatic Transmissions
			EM0 = All 5.9L	DBB = All Manual Transmissions
			EV0 = All 4.7L	

AR = use ase required - = Non illustrrated part

Pump,Mounting and Pulley,3.9L [EH0],5.9L [EM0] Engines
Figure 19-520

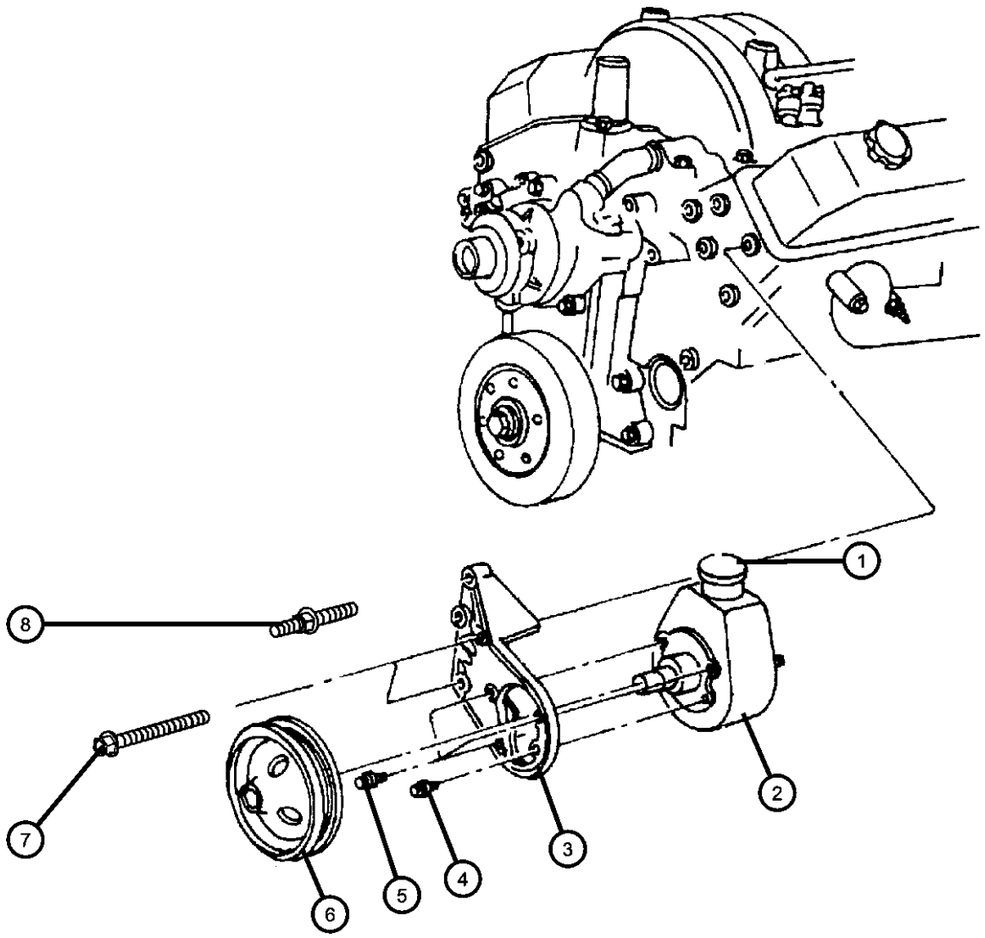

ITEM	PART NUMBER	QTY	LINE	SERIES	BODY	ENGINE	TRANS	TRIM	DESCRIPTION
Note:Sales Codes;									
[EH0]=Engines - ALL 3.9L V6 Gas									
[EM0]=Engines - ALL 5.9L 8 Cylinder Gas									
1	04694766	1				EH0, EM0			CAP, Power Steering Pump
2	52039489AC	1				EH0, EM0			PUMP, Power Steering
	05166226AA								Mopar Power Steering Fluid Pint
3	53005613	1				EH0, EM0			BRACKET, Power Steering Pump
4	06101496	1				EH0, EM0			SCREW
5	06502501	3				EH0, EM0			BOLT, Hex Head, M10x1.50x28
6	53005614	1				EH0, EM0			PULLEY, Power Steering Pump
7	06034247	2				EH0, EM0			BOLT, Hex Head, .375-16x.25
8	06034985	2				EH0, EM0			STUD, .375-16x3.04

DAKOTA (AN)

SERIES	LINE	BODY	ENGINE	TRANSMISSION
L = Dakota (All)	1 = Dakota 2WD	61 = Regular Cab (112 WB)	EPE = 2.5L 4 Cylinder	DGK = 4 Speed Automatic 42RE
	5 = Dakota 4WD	31 = Club Cab (131 WB)	EHC = 3.9L 6 Cylinder	DGT = 4 Speed Automatic 46RE
		84 = Quad Cab (131 WB)	EML = 5.0L 8 Cylinder	DDC = 5 Speed HD Manual
			EVA = 4.7L Magnum V8	DDK = 5 Speed HD Manual
			EP0 = All 2.5L	DG4 = Multispeed Automatic 45RFE
			EH0 = All 3.9L	DG0 = All Automatic Transmissions
			EM0 = All 5.9L	DBB = All Manual Transmissions
			EV0 = All 4.7L	

Pump,Mounting and Pulley,4.7L [EV0] Engine
Figure 19-530

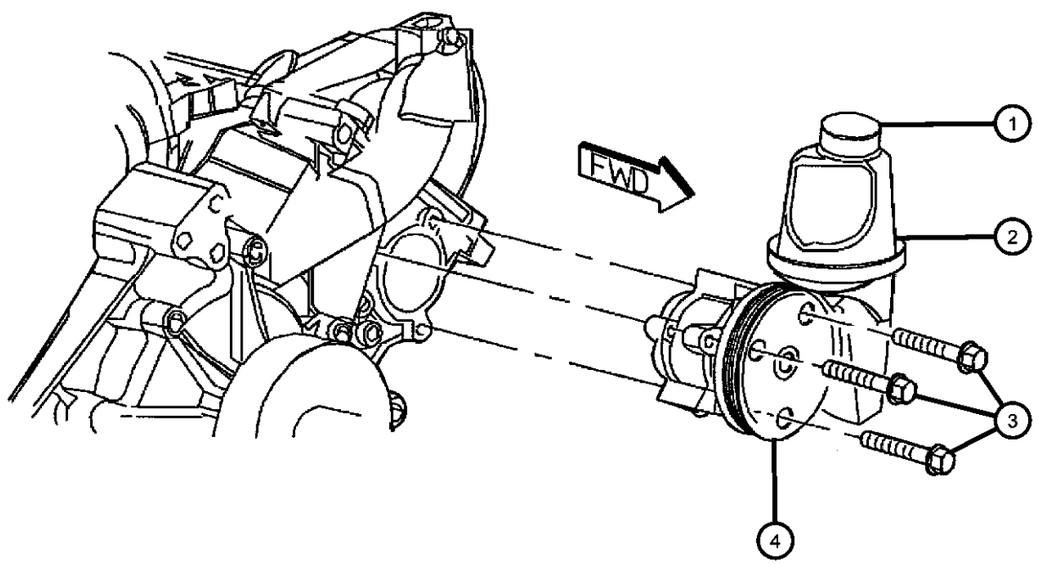

ITEM	PART NUMBER	QTY	LINE	SERIES	BODY	ENGINE	TRANS	TRIM	DESCRIPTION
Note:Sales Codes; [EV0]=Engines - All 4.7L Gas									
1	52039424	1				EV0			CAP, Power Steering Pump
2	52106253AD	1				EV0			PUMP, Power Steering
	05166226AA								Mopar Power Steering Fluid Pint
	04883077								Mopar Power Steering Fluid Pint
3	06102045AA	3				EV0			SCREW AND WASHER, Hex Head, Power Steering Pump, Mounting
4	53030962	1				EV0			PULLEY, Power Steering Pump

DAKOTA (AN)

SERIES	LINE	BODY	ENGINE	TRANSMISSION
L = Dakota (All)	1 = Dakota 2WD	61 = Regular Cab (112 WB)	EPE = 2.5L 4 Cylinder	DGK = 4 Speed Automatic 42RE
	5 = Dakota 4WD	31 = Club Cab (131 WB)	EHC = 3.9L 6 Cylinder	DGT = 4 Speed Automatic 46RE
		84 = Quad Cab (131 WB)	EML = 5.0L 8 Cylinder	DDC = 5 Speed HD Manual
			EVA = 4.7L Magnum V8	DDK = 5 Speed HD Manual
			EP0 = All 2.5L	DG4 = Multispeed Automatic 45RFE
			EH0 = All 3.9L	DG0 = All Automatic Transmissions
			EM0 = All 5.9L	DBB = All Manual Transmissions
			EV0 = All 4.7L	

Hoses,Power Steering,2.5L [EP0] Engine
Figure 19-710

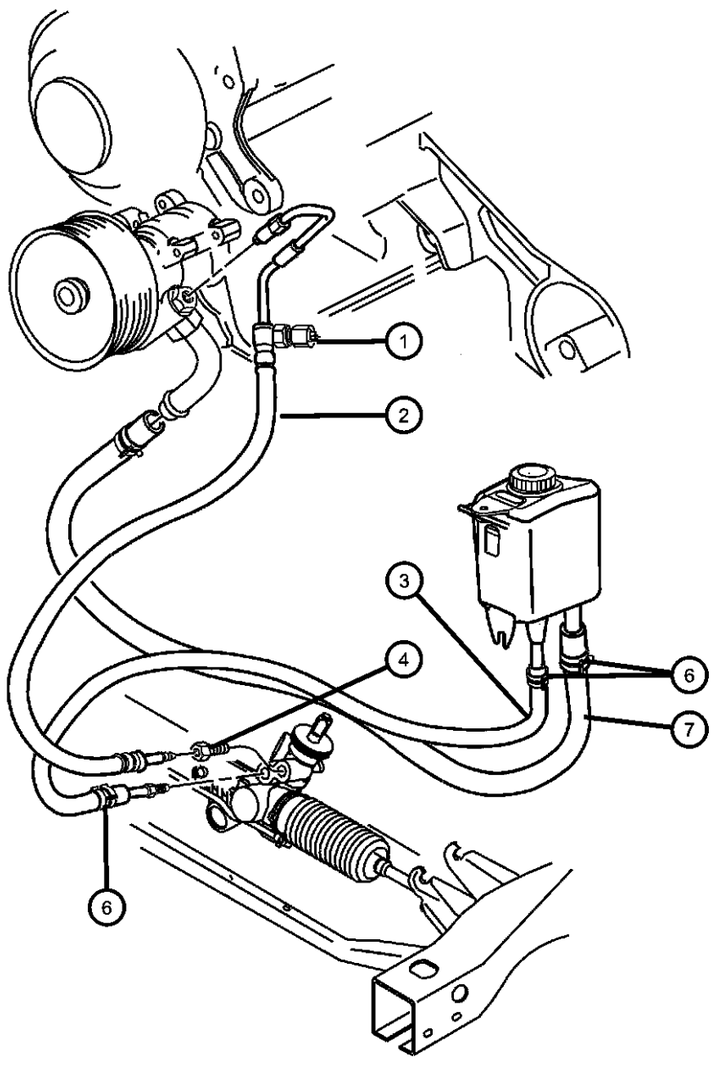

ITEM	PART NUMBER	QTY	LINE	SERIES	BODY	ENGINE	TRANS	TRIM	DESCRIPTION
Note: Sales Codes; [EP0]=Engines - All 2.5L 4 Cylinder Gas									
1	56027906AB	1				EP0			SWITCH, Power Steering
2	52038945	1				EP0			HOSE, Power Steering Pressure
3									HOSE, Power Steering Return
	52106215AF	1	5			EP0			
	52106713AB	1				EP0			
4	52037556	1	1						FITTING, Power Steering, Quick Connect
-5	03441105	1	1						SEAL, Power Steering Quick Connect Fitting
6	06504217	1				EP0			CLAMP, Hose, M18.5, as Required
7	52106716AA	1				EP0			HOSE, Pump Supply
-8	05205254	1				EP0			O RING, Power Steering Hose, as Required

DAKOTA (AN)

SERIES	LINE	BODY	ENGINE	TRANSMISSION
L = Dakota (All)	1 = Dakota 2WD	61 = Regular Cab (112 WB)	EPE = 2.5L 4 Cylinder	DGK = 4 Speed Automatic 42RE
	5 = Dakota 4WD	31 = Club Cab (131 WB)	EHC = 3.9L 6 Cylinder	DGT = 4 Speed Automatic 46RE
		84 = Quad Cab (131 WB)	EML = 5.0L 8 Cylinder	DDC = 5 Speed HD Manual
			EVA = 4.7L Magnum V8	DDK = 5 Speed HD Manual
			EP0 = All 2.5L	DG4 = Multispeed Automatic 45RFE
			EH0 = All 3.9L	DG0 = All Automatic Transmissions
			EM0 = All 5.9L	DBB = All Manual Transmissions
			EV0 = All 4.7L	

Hoses,Power Steering,3.9L [EH0] 5.9L [EM0] Engine
Figure 19-720

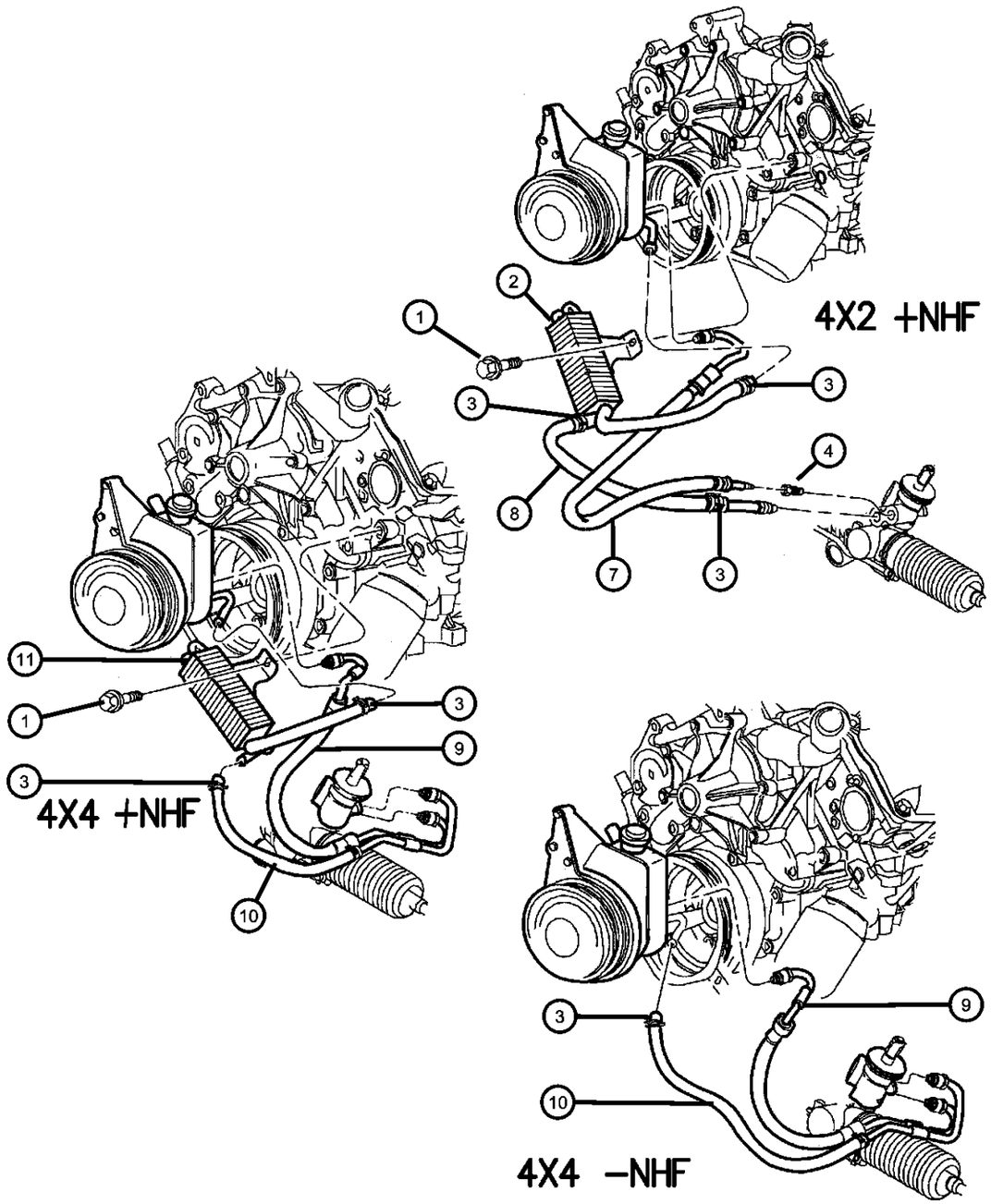

ITEM	PART NUMBER	QTY	LINE	SERIES	BODY	ENGINE	TRANS	TRIM	DESCRIPTION
Note:Sales Codes; [EH0] = Engines - All 3.9L V6 Gas [EM0] =Engines - All 5.9L 8 Cylinder Gas [NHF]= Cooler - Power Steering									
1	06022250	1				EH0, EM0			SCREW AND WASHER, Hex Head, .375-16x.75, Cooler, Mounting
2	52106102AD	1	1			EH0, EM0			HOSE AND COOLER, Power Steering
3	06504217	1	1			EH0, EM0			CLAMP, Hose, M18.5, as Required
4	52037556	1	1						FITTING, Power Steering, Quick Connect
-5	03441105	1	1						SEAL, Quick Connect Fitting
-6	05205254	1	1						O RING, Power Steering Hose, as Required
7	52038951AC	1	1			EH0, EM0			HOSE, Power Steering Pressure
8									HOSE, Power Steering Return
	52037828AC	1	1			EH0, EM0			without [NHF]
	52106001AC	1	1			EH0, EM0			with [NHF]
9	52106411AC	1	5			EH0, EM0			HOSE, Power Steering Pressure
10	52106215AF	1	5			EH0, EM0			HOSE, Power Steering Return
11	52106416AB	1	5			EH0, EM0			HOSE AND COOLER, Power Steering
-12	52038018	1	5			EH0, EM0			COOLER, Power Steering, Cooler Only

DAKOTA (AN)

SERIES	LINE	BODY	ENGINE	TRANSMISSION
L = Dakota (All)	1 = Dakota 2WD	61 = Regular Cab (112 WB)	EPE = 2.5L 4 Cylinder	DGK = 4 Speed Automatic 42RE
	5 = Dakota 4WD	31 = Club Cab (131 WB)	EHC = 3.9L 6 Cylinder	DGT = 4 Speed Automatic 46RE
		84 = Quad Cab (131 WB)	EML = 5.0L 8 Cylinder	DDC = 5 Speed HD Manual
			EVA = 4.7L Magnum V8	DDK = 5 Speed HD Manual
			EP0 = All 2.5L	DG4 = Multispeed Automatic 45RFE
			EH0 = All 3.9L	DG0 = All Automatic Transmissions
			EM0 = All 5.9L	DBB = All Manual Transmissions
			EV0 = All 4.7L	

Hoses,Power Steering,4.7L [EV0] Engine
Figure 19-730

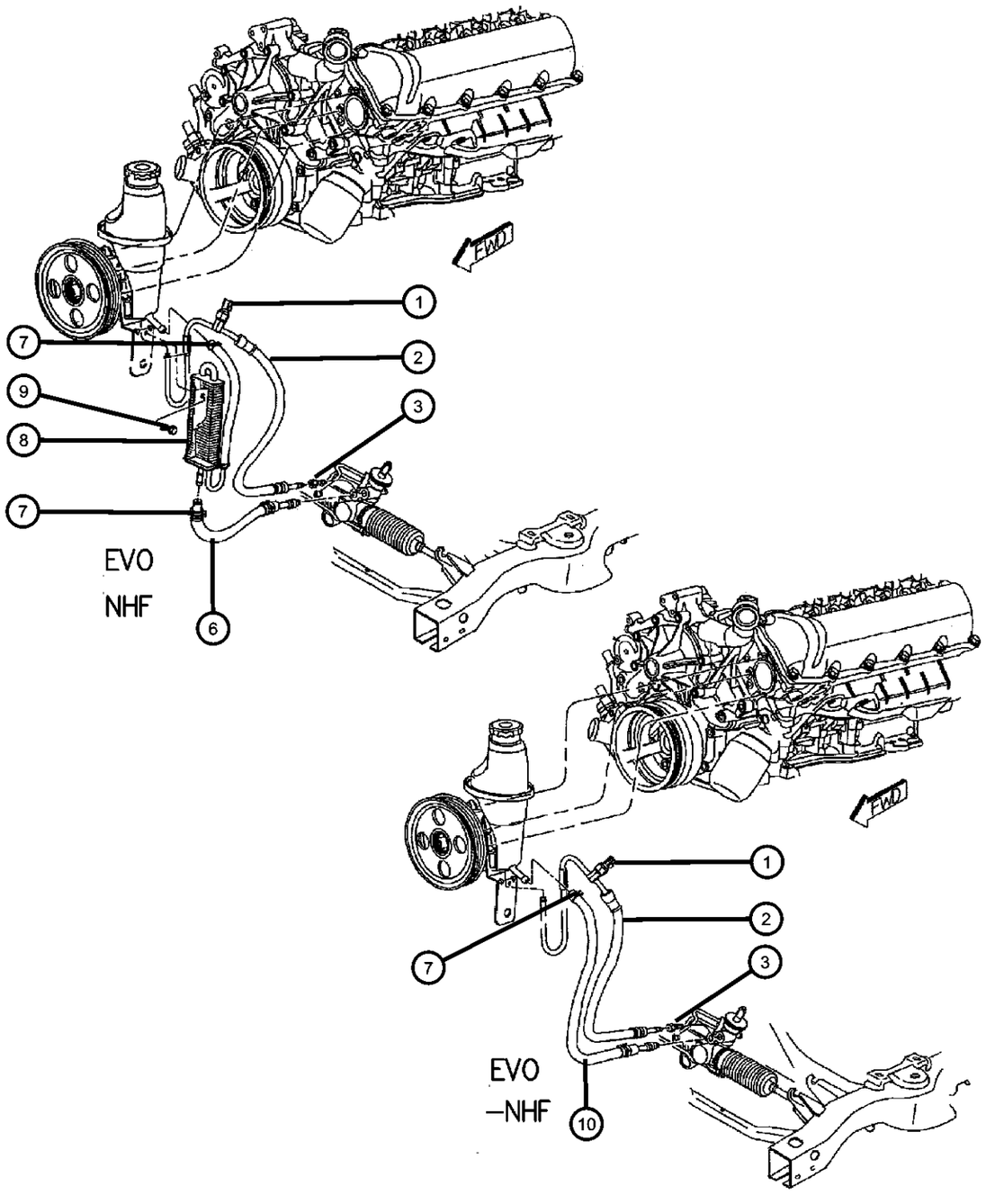

ITEM	PART NUMBER	QTY	LINE	SERIES	BODY	ENGINE	TRANS	TRIM	DESCRIPTION
Note:Sales Codes; [EV0]= Engines - All 4.7L Gas [NHF]=Cooler - Power Steering									
1									SWITCH, Power Steering
	56041335AB	1	1			EV0			
		1	5			EV0			
2									HOSE, Power Steering Pressure
	52106213AE	1	1			EV0			
	52106419AF	1	5			EV0			
3	52037556	1	1						FITTING, Power Steering, Quick Connect
-4	03441105	1	1						SEAL, Quick Connect Fitting
-5	05205254	1	1						O RING, Power Steering Hose, as Required
6									HOSE, Power Steering Return
	52106735AD	1	1			EV0			with [NHF]
	52106944AC	1	5			EV0			with [NHF]
7	06504217	1				EV0			CLAMP, Hose, M18.5, as Required
8	52106736AD	1				EV0			HOSE AND COOLER, Power Steering, with [NHF]
9	06502064	1				EV0			SCREW, Tapping, M6x1x20, Cooler, Mounting
10									HOSE, Power Steering Return
	52106215AF	1	5			EV0			without [NHF]
	52106217AC	1	1			EV0			without [NHF]

DAKOTA (AN)

SERIES	LINE	BODY	ENGINE	TRANSMISSION
L = Dakota (All)	1 = Dakota 2WD	61 = Regular Cab (112 WB)	EPE = 2.5L 4 Cylinder	DGK = 4 Speed Automatic 42RE
	5 = Dakota 4WD	31 = Club Cab (131 WB)	EHC = 3.9L 6 Cylinder	DGT = 4 Speed Automatic 46RE
		84 = Quad Cab (131 WB)	EML = 5.0L 8 Cylinder	DDC = 5 Speed HD Manual
			EVA = 4.7L Magnum V8	DDK = 5 Speed HD Manual
			EP0 = All 2.5L	DG4 = Multispeed Automatic 45RFE
			EH0 = All 3.9L	DG0 = All Automatic Transmissions
			EM0 = All 5.9L	DBB = All Manual Transmissions
			EV0 = All 4.7L	

Group - 42RE

Automatic Transmission 4 Speed

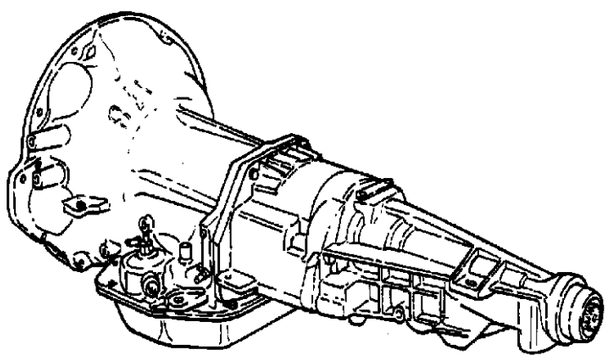

42RE-100 Transmission Assembly 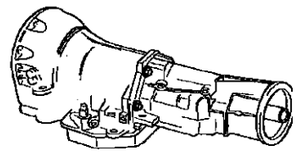	**42RE-1000** Overdrive Gear Train 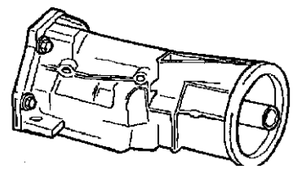	**42RE-1200** Gearshift Controls 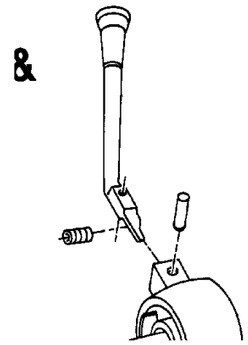	**42RE-200** Case and Extension 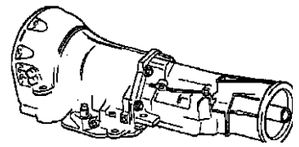
42RE-300 Oil Pump 	**42RE-400** Gear Train 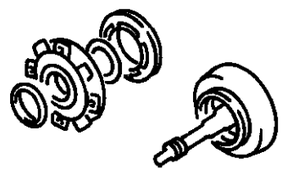	**42RE-500** Bands, Reverse and Kickdown 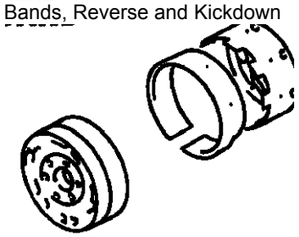	**42RE-700** Valve Body 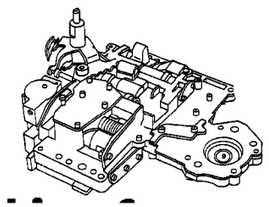

Group - 42RE Automatic Transmission 4 Speed

Illustration Title — Group-Fig. No.

Transmission Assembly
Transmission Assembly [DGK] ..... Fig. 42RE - 110

Case and Extension
Case & Related Parts [DGK] ..... Fig. 42RE - 210
Extension [DGK] ..... Fig. 42RE - 220

Oil Pump
Oil Pump [DGK] ..... Fig. 42RE - 310

Gear Train
Gear Train [DGK] ..... Fig. 42RE - 410
Gear Train & Intermediate [DGK] ..... Fig. 42RE - 420
Output Shaft [DGK] ..... Fig. 42RE - 430

Bands, Reverse and Kickdown
Bands [DGK] ..... Fig. 42RE - 510

Valve Body
Valve Body [DGK] ..... Fig. 42RE - 710
Servos [DGK] ..... Fig. 42RE - 720
Parking Sprag [DGK] ..... Fig. 42RE - 730

Overdrive Gear Train
Overdrive Clutch [DGK] ..... Fig. 42RE - 1010

Gearshift Controls
Controls, Gearshift [DGK] ..... Fig. 42RE - 1210

Transmission Assembly [DGK]
Figure 42RE-110

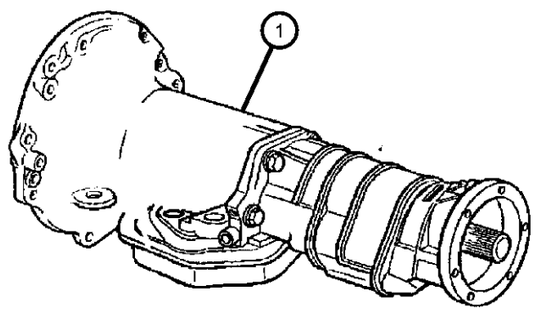

ITEM	PART NUMBER	QTY	LINE	SERIES	BODY	ENGINE	TRANS	TRIM	DESCRIPTION
NOTE:									
Sales Codes:									
[DGK]=42RE 4 Speed Automatic Transmission									
1									TRANSMISSION PACKAGE
	05018402AA	1	1				DGK		With Stamp # [52119751AA] [Package Contains 52119751AA Transmission, K4736593 Torque Converter, K1949765 Screw]
	05013457AA								Mopar Automatic Transmission Fluid Quart
	05013458AA								Mopar Automatic Transmission Fluid Gallon
	05018405AA	1	5				DGK		With Stamp # [52119752AA] [Package Contains 52119752AA Transmission, K4736593 Torque Converter, K1949765 Screw]
	05013457AA								Mopar Automatic Transmission Fluid Quart
	05013458AA								Mopar Automatic Transmission Fluid Gallon
-2									OVERDRIVE
	52118154	1	5				DGK		
	52118782	1	1				DGK		

DAKOTA (AN)

SERIES	LINE	BODY	ENGINE	TRANSMISSION
L = Dakota (All)	1 = Dakota 2WD	61 = Regular Cab (112 WB)	EPE = 2.5L 4 Cylinder	DGK = 4 Speed Automatic 42RE
	5 = Dakota 4WD	31 = Club Cab (131 WB)	EHC = 3.9L 6 Cylinder	DGT = 4 Speed Automatic 46RE
		84 = Quad Cab (131 WB)	EML = 5.0L 8 Cylinder	DDC = 5 Speed HD Manual
			EVA = 4.7L Magnum V8	DDK = 5 Speed HD Manual
			EP0 = All 2.5L	DG4 = Multispeed Automatic 45RFE
			EH0 = All 3.9L	DG0 = All Automatic Transmissions
			EM0 = All 5.9L	DBB = All Manual Transmissions
			EV0 = All 4.7L	

Case & Related Parts [DGK]
Figure 42RE-210

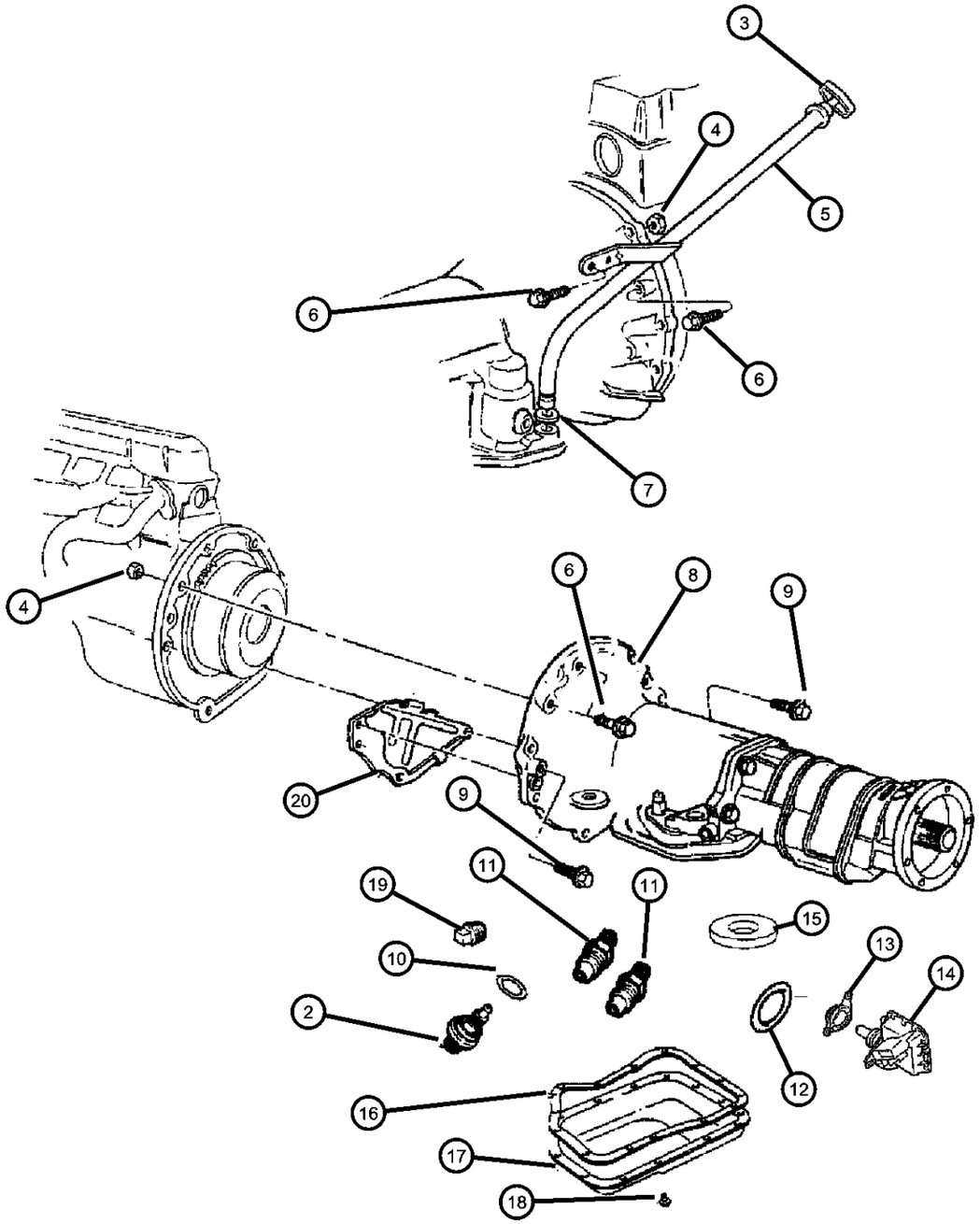

ITEM	PART NUMBER	QTY	LINE	SERIES	BODY	ENGINE	TRANS	TRIM	DESCRIPTION

NOTE:
Sales Codes:
[DGK]=42RE 4 Speed Automatic Transmission
[DGT]=46RE 4 Speed Automatic Transmission
[DG0]=All Automatic Transmissions
[EM0]=All 5.9L V-8 Engines
[EV0]=All 4.7L V-8 Engines

ITEM	PART NUMBER	QTY	LINE	SERIES	BODY	ENGINE	TRANS	TRIM	DESCRIPTION
-1									SEAL AND GASKET PACKAGE, Transmission
	05072412AC	1	1				DGK		
		1	5				DGK		
2									SENSOR, Transmission Output Speed
	04800879	1	1				DGK		
		1	5				DGK		
3	52107769AB	1					DGK, DGT		INDICATOR, Transmission Fluid Level
4	06025021	1	1				DGT		NUT, Hex, .437-14
5	52107689AF	1					DGK		TUBE, Oil Filler
6	06022266	4					DG0		SCREW, Hex Head, .375-16x1.5
7	52118629AB	1					DGK, DGT		SEAL, Oil Filler Tube
8									CASE, Transmission
	52118176AB	1	1				DGK		
		1	5				DGK		
9	06036385AA	2				EM0, EV0	DG0		SCREW AND WASHER, Hex Head, .437-14x2.00
10									O RING, Trans Speed Sensor
	06501701	1	1				DGK		
		1	5				DGK		
11									NUT, Inverted Flare, .62-18
	06033879	2	1				DGK		
		2	5				DGK		
12	02408143	1	1				DGK		WASHER, Switch
13									SWITCH, Neutral, Safety, Back Up
	56045489AA	1	1				DGK		
		1	5				DGK		
14									BRACKET

DAKOTA (AN)

SERIES	LINE	BODY	ENGINE	TRANSMISSION
L = Dakota (All)	1 = Dakota 2WD	61 = Regular Cab (112 WB)	EPE = 2.5L 4 Cylinder	DGK = 4 Speed Automatic 42RE
	5 = Dakota 4WD	31 = Club Cab (131 WB)	EHC = 3.9L 6 Cylinder	DGT = 4 Speed Automatic 46RE
		84 = Quad Cab (131 WB)	EML = 5.0L 8 Cylinder	DDC = 5 Speed HD Manual
			EVA = 4.7L Magnum V8	DDK = 5 Speed HD Manual
			EP0 = All 2.5L	DG4 = Multispeed Automatic 45RFE
			EH0 = All 3.9L	DG0 = All Automatic Transmissions
			EM0 = All 5.9L	DBB = All Manual Transmissions
			EV0 = All 4.7L	

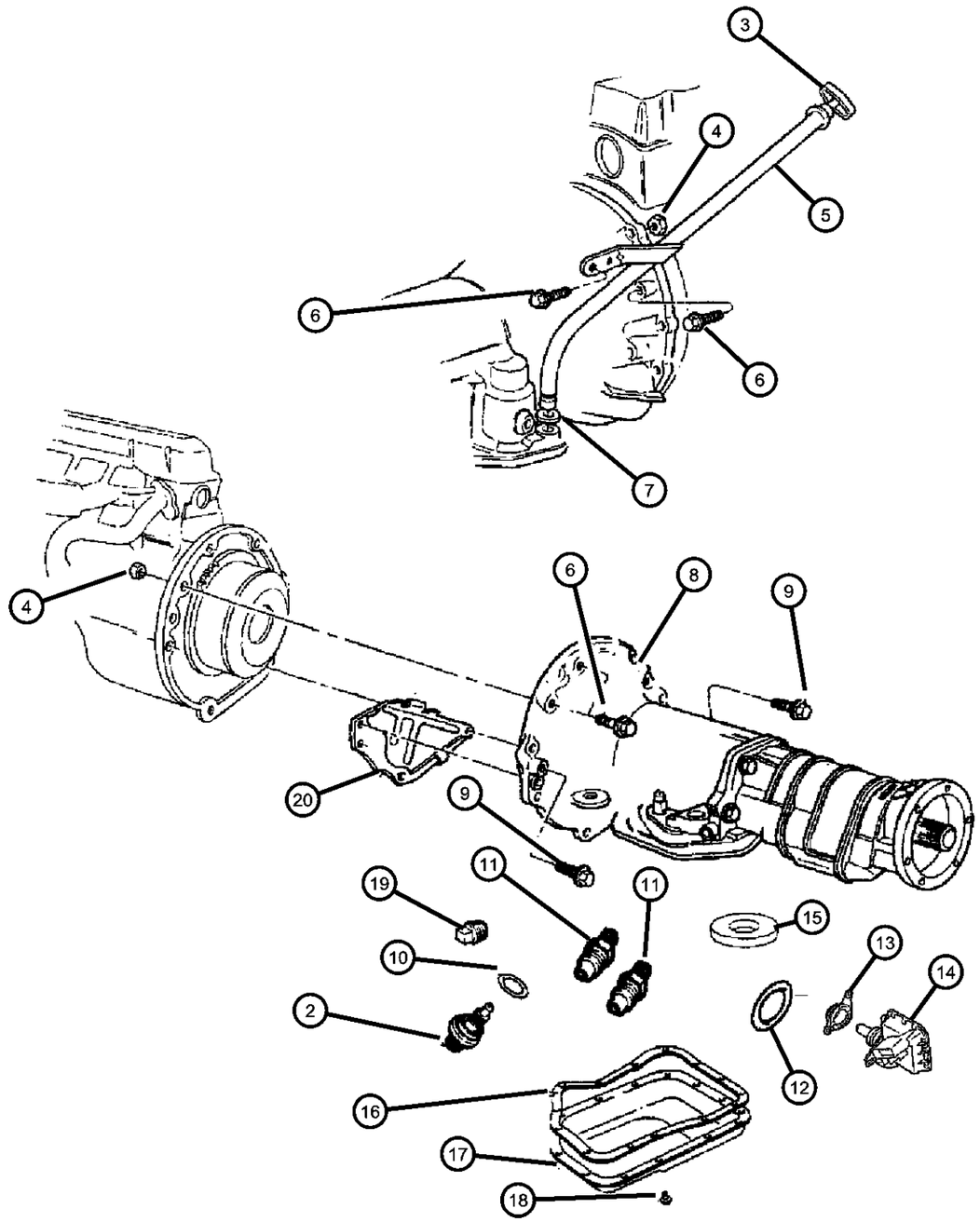

ITEM	PART NUMBER	QTY	LINE	SERIES	BODY	ENGINE	TRANS	TRIM	DESCRIPTION
	56049014AA	1	1				DGK		Rage Sensor & Bracket
		1	5				DGK		Rage Sensor & Bracket
15									MAGNET, Transmission
	03681601	1	1				DGK		
		1	5				DGK		
16									GASKET, Oil Pan
	04295875AC	1	1				DGK		
		1	5				DGK		
17									PAN, Transmission Oil
	52118779AC	1	1				DGK		
		1	5				DGK		
18									SCREW AND WASHER, Hex Head, .312-18x.625
	04723548	1	1				DGK		
		1	5				DGK		
19									PLUG, Pressure Check
	06028095	1	1				DGK		
		1	5				DGK		
20									COVER, Converter
	52117754AB	1	5				DGK		
	52117755AB	1	1				DGK		
-21									STRUT, Transmission to Block
	52117771AB	1	1				DGK, DGT		Left
	52117772	1	1				DGK, DGT		Right

DAKOTA (AN)

SERIES	LINE	BODY	ENGINE	TRANSMISSION
L = Dakota (All)	1 = Dakota 2WD	61 = Regular Cab (112 WB)	EPE = 2.5L 4 Cylinder	DGK = 4 Speed Automatic 42RE
	5 = Dakota 4WD	31 = Club Cab (131 WB)	EHC = 3.9L 6 Cylinder	DGT = 4 Speed Automatic 46RE
		84 = Quad Cab (131 WB)	EML = 5.0L 8 Cylinder	DDC = 5 Speed HD Manual
			EVA = 4.7L Magnum V8	DDK = 5 Speed HD Manual
			EP0 = All 2.5L	DG4 = Multispeed Automatic 45RFE
			EH0 = All 3.9L	DG0 = All Automatic Transmissions
			EM0 = All 5.9L	DBB = All Manual Transmissions
			EV0 = All 4.7L	

Extension [DGK]
Figure 42RE-220

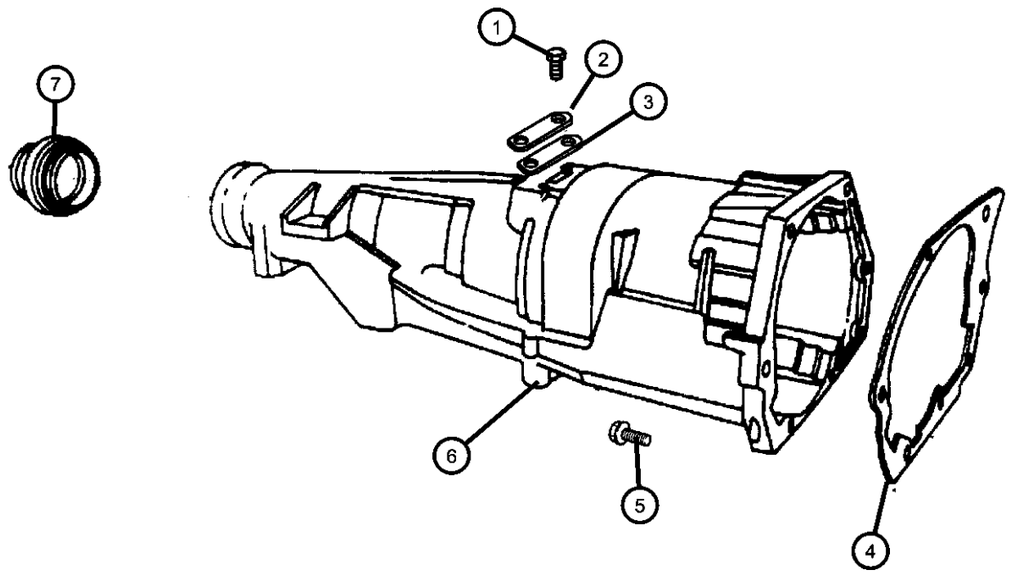

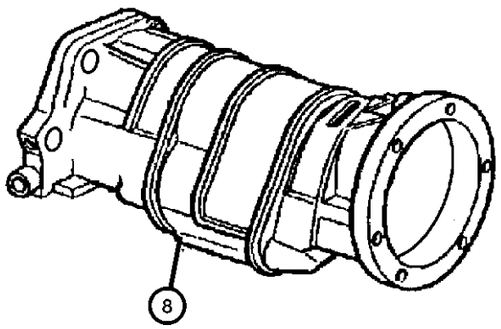

ITEM	PART NUMBER	QTY	LINE	SERIES	BODY	ENGINE	TRANS	TRIM	DESCRIPTION
NOTE:									
Sales Codes:									
[DGK]=42RE 4 Speed Automatic Transmission									
1	52117772	1							SCREW, (NOT SERVICED)
2	02466957	1	1				DGK		COVER, Transmission Converter
3	02801398	1	1				DGK		GASKET, Transmission
4									GASKET, Overdrive Piston Retainer
	04471564	1	5				DGK		
		1	1				DGK		
5									SCREW, Hex Flange Head, .375-16x1.38
	06036046AA	7	1				DGK		
		7	5				DGK		
6	05003231AA	1	1				DGK		CASE, Transmission Rear
7	04531216AB	1	1				DGK		SEAL, Output Shaft
8	04797342	1	5				DGK		ADAPTER, Transfer Case
-9	04269956	1	5				DGK		SEAL, Adapter

DAKOTA (AN)

SERIES	LINE	BODY	ENGINE	TRANSMISSION
L = Dakota (All)	1 = Dakota 2WD	61 = Regular Cab (112 WB)	EPE = 2.5L 4 Cylinder	DGK = 4 Speed Automatic 42RE
	5 = Dakota 4WD	31 = Club Cab (131 WB)	EHC = 3.9L 6 Cylinder	DGT = 4 Speed Automatic 46RE
		84 = Quad Cab (131 WB)	EML = 5.0L 8 Cylinder	DDC = 5 Speed HD Manual
			EVA = 4.7L Magnum V8	DDK = 5 Speed HD Manual
			EP0 = All 2.5L	DG4 = Multispeed Automatic 45RFE
			EH0 = All 3.9L	DG0 = All Automatic Transmissions
			EM0 = All 5.9L	DBB = All Manual Transmissions
			EV0 = All 4.7L	

AR = use ase required - = Non illustrrated part

Oil Pump [DGK]
Figure 42RE-310

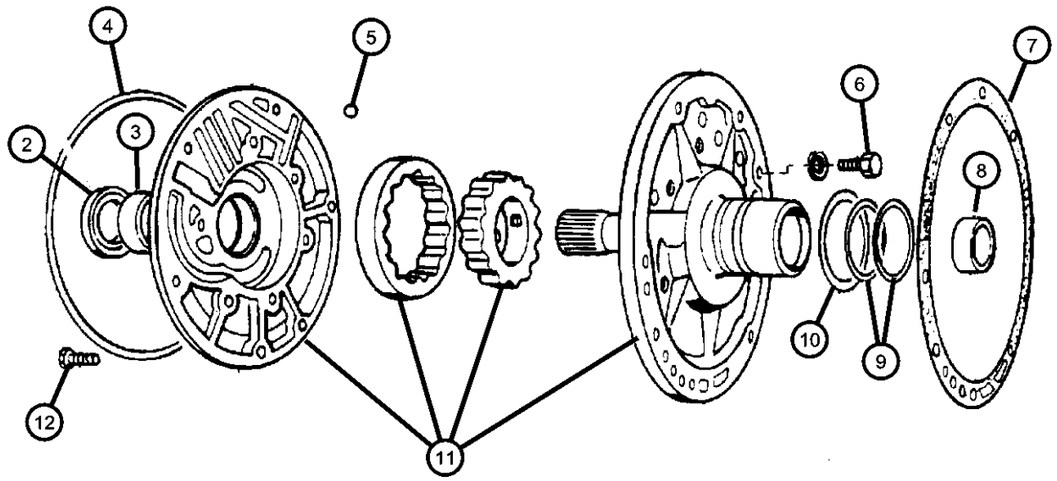

ITEM	PART NUMBER	QTY	LINE	SERIES	BODY	ENGINE	TRANS	TRIM	DESCRIPTION
NOTE:									
Sales Codes:									
[DGK]=42RE 4 Speed Automatic Transmission									
-1									GASKET AND SEAL PACKAGE, Transmission Oil Pump
	04713108AB	1	1				DGK		
		1	5				DGK		
2									SEAL, Impeller Hub, 57.25mm OD
	04412475	1	1				DGK		
		1	5				DGK		
3									BUSHING, Front Pump
	02466796	1	1				DGK		
		1	5				DGK		
4									SEAL, Front Pump Housing
	02204709	1	1				DGK		
		1	5				DGK		
5									BALL, Valve Body Check
	00104918	1	1				DGK		
		1	5				DGK		
6									SCREW, Hex Head, .312-18x.687
	00179815	6	1				DGK		
		6	5				DGK		
7									GASKET, Transmission Oil Pump
	52118266	1	1				DGK		
		1	5				DGK		
8									BUSHING, Reaction Shaft
	04058635	1	1				DGK		
		1	5				DGK		
9									SEAL, Ring Reaction Support, 2 1/16 O.D.
	04471874	2	1				DGK		
		2	5				DGK		
10									THRUST WASHER, Front Clutch
	04617786	1	1				DGK		

DAKOTA (AN)

SERIES	LINE	BODY	ENGINE	TRANSMISSION
L = Dakota (All)	1 = Dakota 2WD 5 = Dakota 4WD	61 = Regular Cab (112 WB) 31 = Club Cab (131 WB) 84 = Quad Cab (131 WB)	EPE = 2.5L 4 Cylinder EHC = 3.9L 6 Cylinder EML = 5.0L 8 Cylinder EVA = 4.7L Magnum V8 EP0 = All 2.5L EH0 = All 3.9L EM0 = All 5.9L EV0 = All 4.7L	DGK = 4 Speed Automatic 42RE DGT = 4 Speed Automatic 46RE DDC = 5 Speed HD Manual DDK = 5 Speed HD Manual DG4 = Multispeed Automatic 45RFE DG0 = All Automatic Transmissions DBB = All Manual Transmissions

Oil Pump [DGK]
Figure 42RE-310

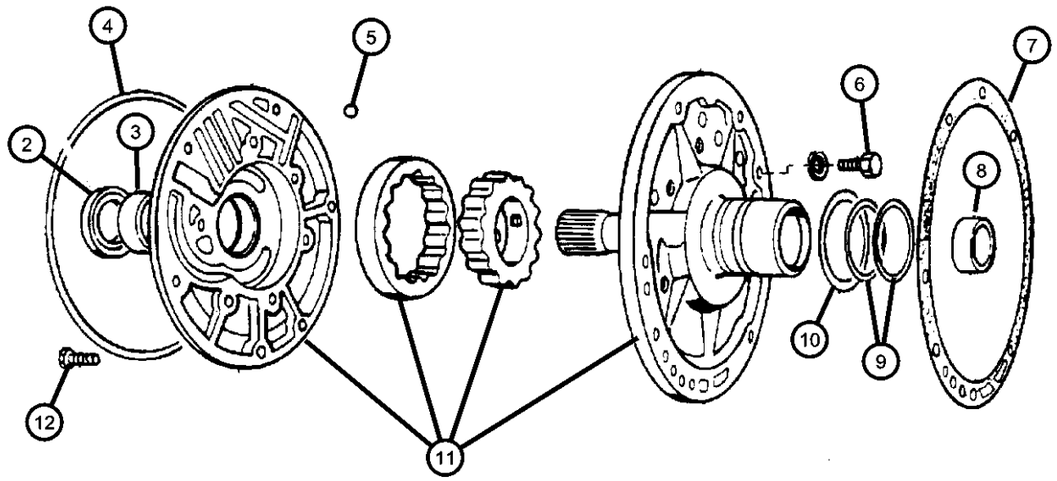

ITEM	PART NUMBER	QTY	LINE	SERIES	BODY	ENGINE	TRANS	TRIM	DESCRIPTION
		1	5				DGK		
11									PUMP, Transmission Oil
	04778552AB	1	1				DGK		
		1	5				DGK		
12									SCREW AND WASHER, Hex Flange Head, .312-18x1.375
	06023943	6	1				DGK		
		6	5				DGK		

DAKOTA (AN)

SERIES	LINE	BODY	ENGINE	TRANSMISSION
L = Dakota (All)	1 = Dakota 2WD	61 = Regular Cab (112 WB)	EPE = 2.5L 4 Cylinder	DGK = 4 Speed Automatic 42RE
	5 = Dakota 4WD	31 = Club Cab (131 WB)	EHC = 3.9L 6 Cylinder	DGT = 4 Speed Automatic 46RE
		84 = Quad Cab (131 WB)	EML = 5.0L 8 Cylinder	DDC = 5 Speed HD Manual
			EVA = 4.7L Magnum V8	DDK = 5 Speed HD Manual
			EP0 = All 2.5L	DG4 = Multispeed Automatic 45RFE
			EH0 = All 3.9L	DG0 = All Automatic Transmissions
			EM0 = All 5.9L	DBB = All Manual Transmissions
			EV0 = All 4.7L	

Gear Train [DGK]
Figure 42RE-410

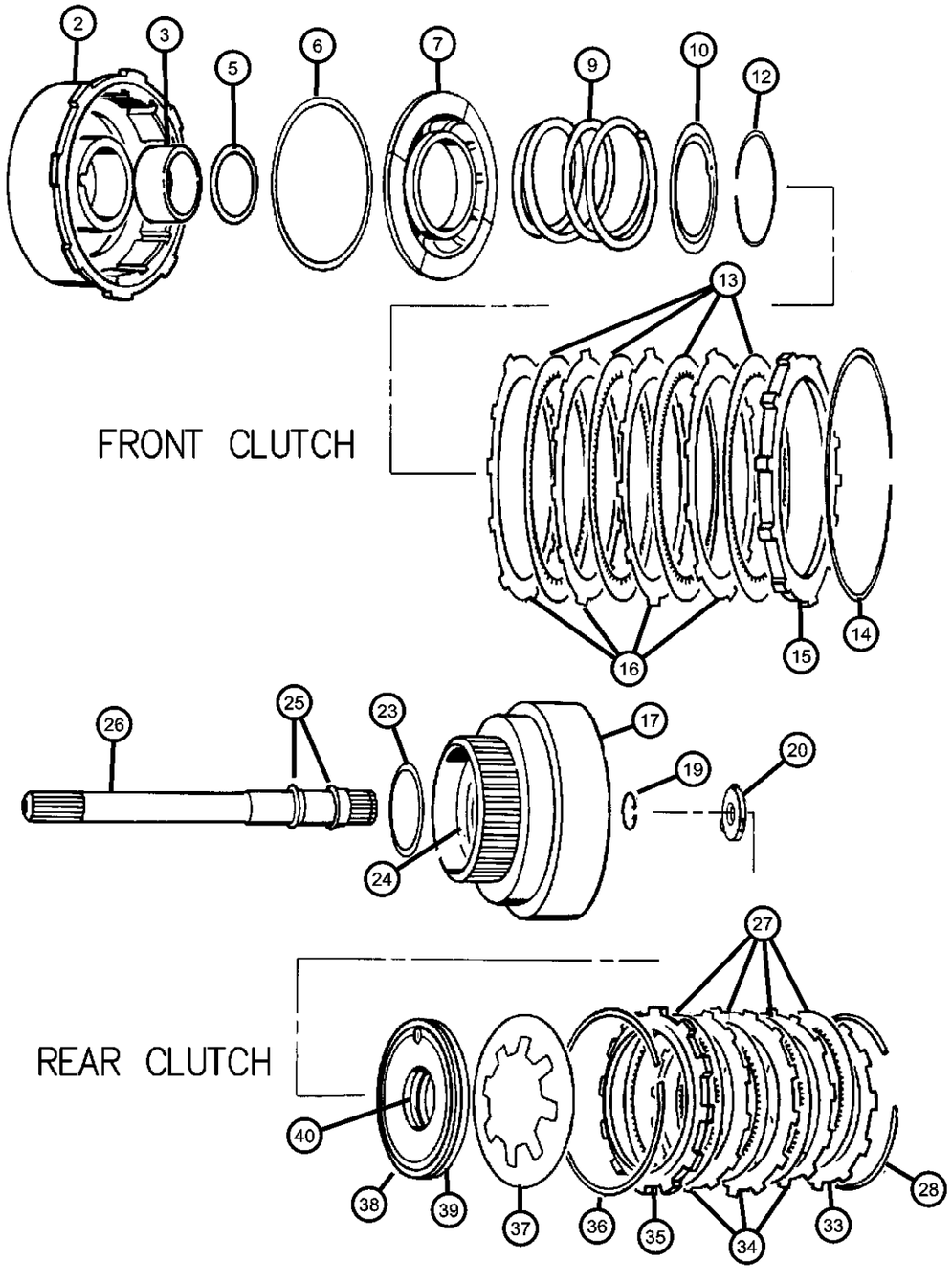

ITEM	PART NUMBER	QTY	LINE	SERIES	BODY	ENGINE	TRANS	TRIM	DESCRIPTION
NOTE:									
Sales Codes:									
[DGK]=42RE 4 Speed Automatic Transmission									
-1									SEAL PACKAGE, Transmission Clutch
	05252926AB	1	1				DGK		
		1	5				DGK		
2									RETAINER AND BUSHING, Transmission Front Clutch
	04531285AB	1	1				DGK		
		1	5				DGK		
3									BUSHING, Front Clutch
	04617157	1	1				DGK		Front
		1	5				DGK		Front
-4									BUSHING, Rear Clutch
	04617159	1	1				DGK		
		1	5				DGK		
5									SEAL, Front Clutch Piston
	03515176	1	1				DGK		
		1	5				DGK		
6									SEAL, Front Piston Clutch
	04058487AB	1	1				DGK		
		1	5				DGK		
7									PISTON, Clutch
	04617154AB	1	5				DGK		
		1	1				DGK		
-8									CHECK BALL, Dia-.187
	00147483	1	1				DGK		
		1	5				DGK		
9									SPRING, Front Clutch
	03515054	1	1				DGK		
		1	5				DGK		
10									RETAINER, Transmission Front Clutch Piston Spring
	04617516AC	1	1				DGK		

DAKOTA (AN)

SERIES	LINE	BODY	ENGINE	TRANSMISSION
L = Dakota (All)	1 = Dakota 2WD	61 = Regular Cab (112 WB)	EPE = 2.5L 4 Cylinder	DGK = 4 Speed Automatic 42RE
	5 = Dakota 4WD	31 = Club Cab (131 WB)	EHC = 3.9L 6 Cylinder	DGT = 4 Speed Automatic 46RE
		84 = Quad Cab (131 WB)	EML = 5.0L 8 Cylinder	DDC = 5 Speed HD Manual
			EVA = 4.7L Magnum V8	DDK = 5 Speed HD Manual
			EP0 = All 2.5L	DG4 = Multispeed Automatic 45RFE
			EH0 = All 3.9L	DG0 = All Automatic Transmissions
			EM0 = All 5.9L	DBB = All Manual Transmissions
			EV0 = All 4.7L	

Gear Train [DGK]
Figure 42RE-410

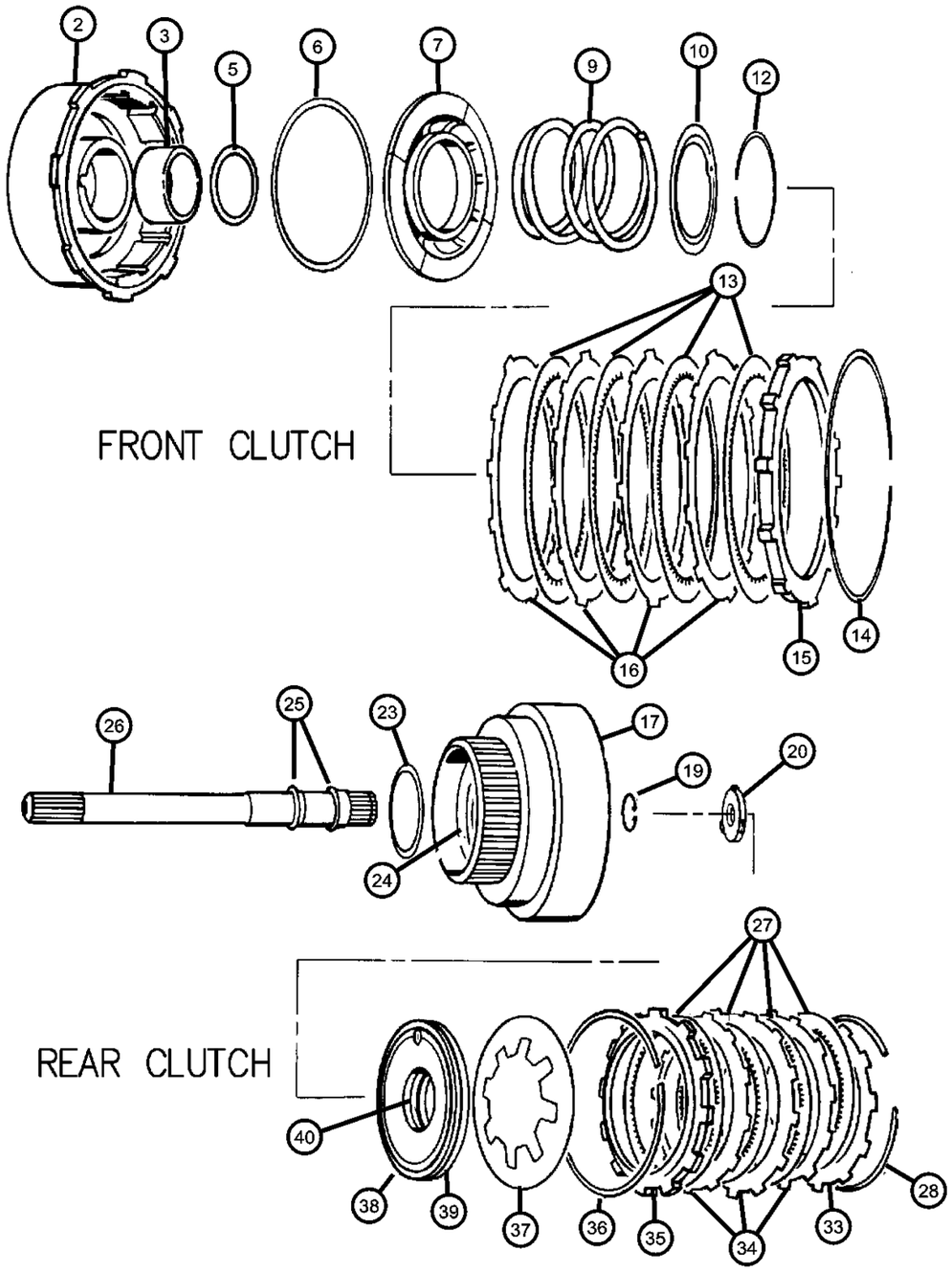

ITEM	PART NUMBER	QTY	LINE	SERIES	BODY	ENGINE	TRANS	TRIM	DESCRIPTION
		1	5				DGK		
-11									CHECK BALL, Dia-.187
	00147483	1	1				DGK		
		1	5				DGK		
12									SNAP RING
	01942400	1	1				DGK		
		1	5				DGK		
13									DISC, Direct Clutch
	04617362	4	1				DGK		
		4	5				DGK		
14									SNAP RING
	03410571	1	1				DGK		
		1	5				DGK		
15									PLATE, Transmission Clutch Reaction
	04617176AB	1	1				DGK		
		1	5				DGK		
16									PLATE, Clutch Separator
	01942403AC	4	5				DGK		
		4	1				DGK		
17									RETAINER, Transmission Rear Clutch
	04505199	1	1				DGK		
		1	5				DGK		
-18									CHECK BALL, Dia-.187
	00147483	1	1				DGK		
		1	5				DGK		
19									SNAP RING, .890625
	06022859	1	1				DGK		
		1	5				DGK		
20									THRUST WASHER, Output Shaft, Gray .052
	04505185	1	1				DGK		
		1	5				DGK		

DAKOTA (AN)

SERIES	LINE	BODY	ENGINE	TRANSMISSION
L = Dakota (All)	1 = Dakota 2WD	61 = Regular Cab (112 WB)	EPE = 2.5L 4 Cylinder	DGK = 4 Speed Automatic 42RE
	5 = Dakota 4WD	31 = Club Cab (131 WB)	EHC = 3.9L 6 Cylinder	DGT = 4 Speed Automatic 46RE
		84 = Quad Cab (131 WB)	EML = 5.0L 8 Cylinder	DDC = 5 Speed HD Manual
			EVA = 4.7L Magnum V8	DDK = 5 Speed HD Manual
			EP0 = All 2.5L	DG4 = Multispeed Automatic 45RFE
			EH0 = All 3.9L	DG0 = All Automatic Transmissions
			EM0 = All 5.9L	DBB = All Manual Transmissions
			EV0 = All 4.7L	

Gear Train [DGK]
Figure 42RE-410

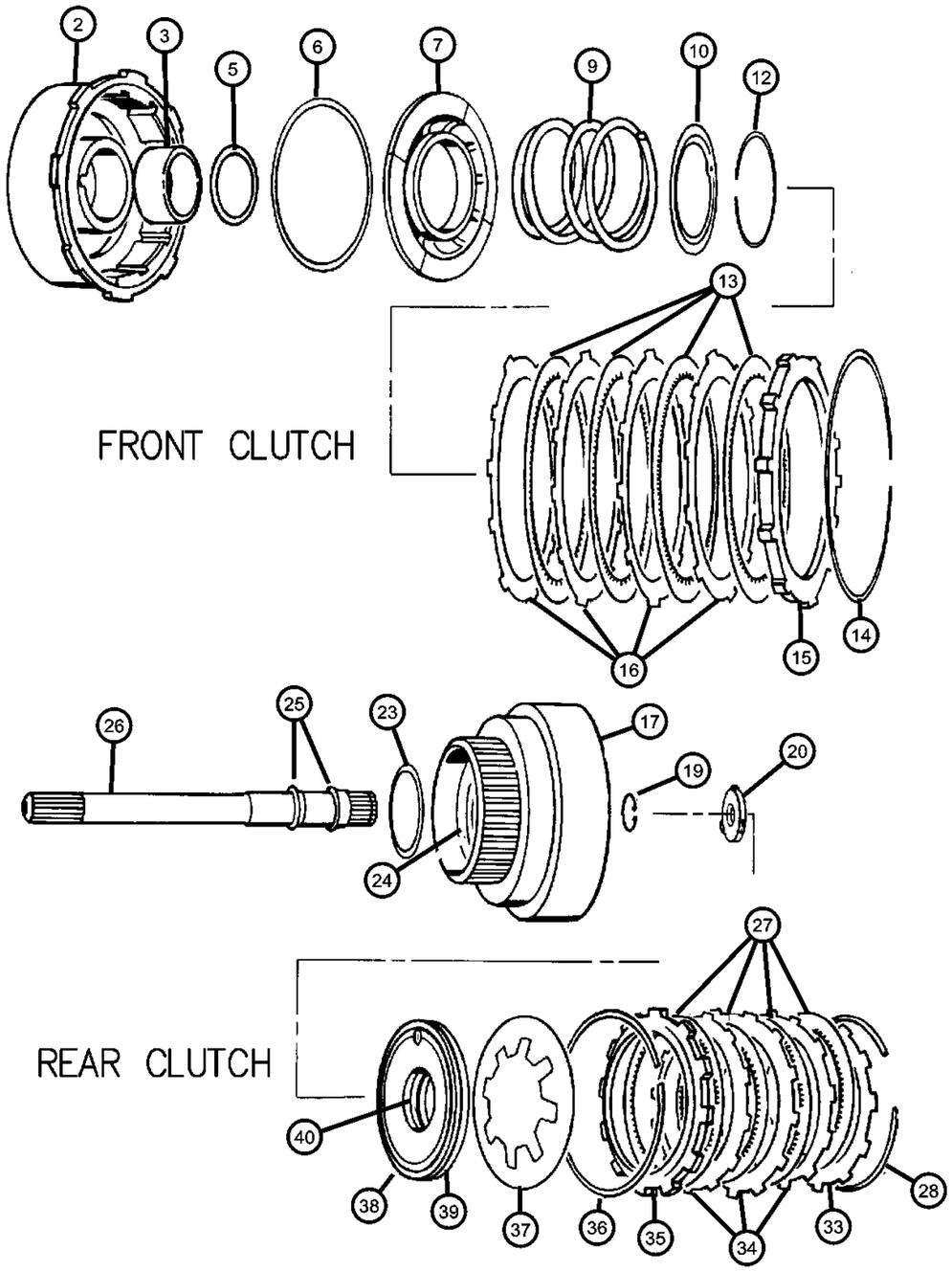

ITEM	PART NUMBER	QTY	LINE	SERIES	BODY	ENGINE	TRANS	TRIM	DESCRIPTION
-21									THRUST WASHER, Output Shaft, Red .068
	04505186	1	1				DGK		
		1	5				DGK		
-22									THRUST WASHER, Output Shaft, Green .083
	04505187	1	1				DGK		
		1	5				DGK		
23									THRUST WASHER, Front Clutch
	04617786	1	1				DGK		
		1	5				DGK		
24									SEAL, Rear Clutch, 1.50 ODx.009 Thk
	04028333	1	1				DGK		
		1	5				DGK		
25									SEAL, Input Shaft
	01401221AB	1	1				DGK		
		1	5				DGK		
26									INPUT SHAFT, Transmission
	04505189	1	1				DGK		
		1	5				DGK		
27									DISC, Clutch
	04713880	1	1				DGK		
		1	5				DGK		
28									SNAP RING
	04130761	1	1				DGK		
		1	5				DGK		
-29									SNAP RING, Rear Clutch, .076
	04539121	1	1				DGK		
		1	5				DGK		
-30									SNAP RING, Rear Clutch, .098
	04539122	1	1				DGK		
		1	5				DGK		
-31									SNAP RING, Rear Clutch, .095

DAKOTA (AN)

SERIES	LINE	BODY	ENGINE	TRANSMISSION
L = Dakota (All)	1 = Dakota 2WD	61 = Regular Cab (112 WB)	EPE = 2.5L 4 Cylinder	DGK = 4 Speed Automatic 42RE
	5 = Dakota 4WD	31 = Club Cab (131 WB)	EHC = 3.9L 6 Cylinder	DGT = 4 Speed Automatic 46RE
		84 = Quad Cab (131 WB)	EML = 5.0L 8 Cylinder	DDC = 5 Speed HD Manual
			EVA = 4.7L Magnum V8	DDK = 5 Speed HD Manual
			EP0 = All 2.5L	DG4 = Multispeed Automatic 45RFE
			EH0 = All 3.9L	DG0 = All Automatic Transmissions
			EM0 = All 5.9L	DBB = All Manual Transmissions
			EV0 = All 4.7L	

Gear Train [DGK]
Figure 42RE-410

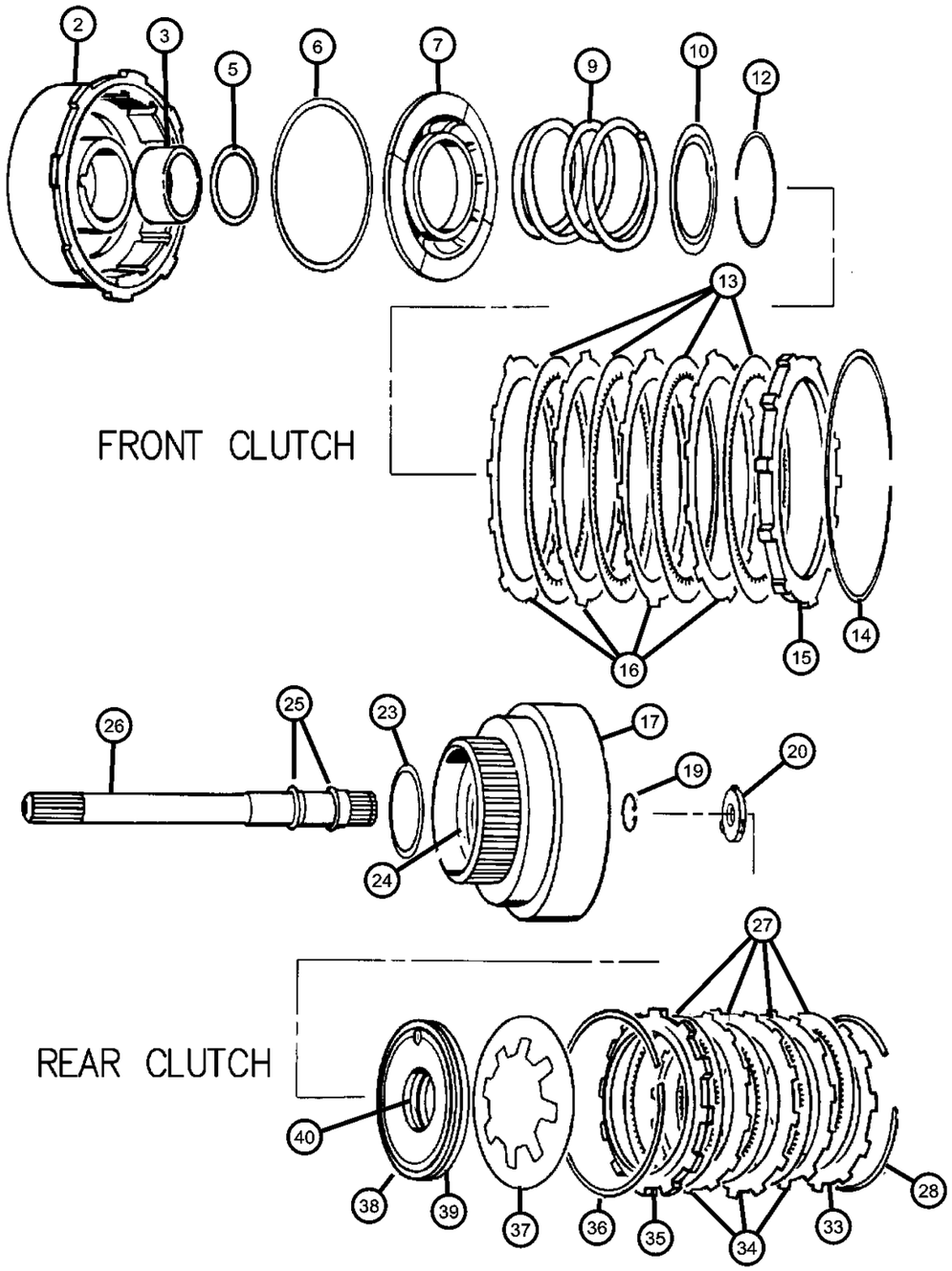

ITEM	PART NUMBER	QTY	LINE	SERIES	BODY	ENGINE	TRANS	TRIM	DESCRIPTION
	04539123	1	1				DGK		
		1	5				DGK		
-32									SNAP RING, Rear Clutch, .107
	04539124	1	1				DGK		
		1	5				DGK		
33									PLATE, Transmission Clutch Reaction
	04617176AB	1	1				DGK		
		1	5				DGK		
34									PLATE, Clutch Separator
	01942403AB	3	1				DGK		
		3	5				DGK		
35									PLATE, Clutch Pressure
	02466281	1	1				DGK		
		1	5				DGK		
36									SPRING, Rear Clutch
	02466283	1	1				DGK		
		1	5				DGK		
37									SPRING, Rear Clutch Piston
	04728487	1	1				DGK		
		1	5				DGK		
38									SEAL, Rear Clutch Piston
	02538695	1	1				DGK		
		1	5				DGK		
39									PISTON, Clutch
	03515716	1	1				DGK		
		1	5				DGK		
40									SEAL, Rear Clutch Piston
	02538510	1	1				DGK		
		1	5				DGK		

DAKOTA (AN)

SERIES	LINE	BODY	ENGINE	TRANSMISSION
L = Dakota (All)	1 = Dakota 2WD	61 = Regular Cab (112 WB)	EPE = 2.5L 4 Cylinder	DGK = 4 Speed Automatic 42RE
	5 = Dakota 4WD	31 = Club Cab (131 WB)	EHC = 3.9L 6 Cylinder	DGT = 4 Speed Automatic 46RE
		84 = Quad Cab (131 WB)	EML = 5.0L 8 Cylinder	DDC = 5 Speed HD Manual
			EVA = 4.7L Magnum V8	DDK = 5 Speed HD Manual
			EP0 = All 2.5L	DG4 = Multispeed Automatic 45RFE
			EH0 = All 3.9L	DG0 = All Automatic Transmissions
			EM0 = All 5.9L	DBB = All Manual Transmissions
			EV0 = All 4.7L	

Gear Train & Intermediate [DGK]
Figure 42RE-420

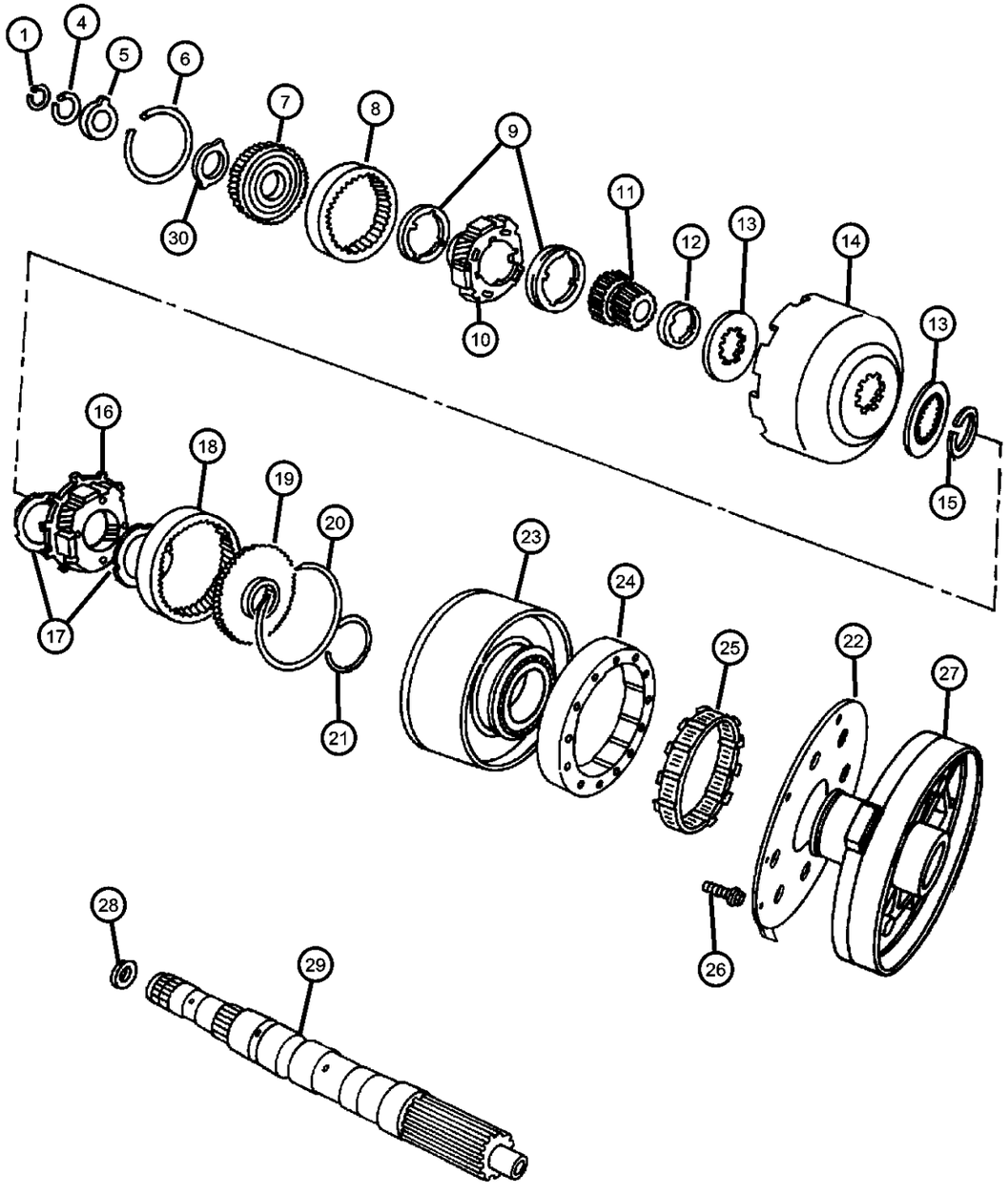

ITEM	PART NUMBER	QTY	LINE	SERIES	BODY	ENGINE	TRANS	TRIM	DESCRIPTION
NOTE:									
Sales Codes:									
[DGK]=42 RE 4 Speed Automatic Transmission									
1									SNAP RING, .946 ID
	06026289	1	1				DGK		
		1	5				DGK		
-2									SNAP RING
	06030938	1	1				DGK		
		1	5				DGK		
-3									SNAP RING, Output Shaft, 1.029 OD
	06030404	1	1				DGK		
		1	5				DGK		
4									SNAP RING, Annulus Gear, 1.375 ID
	06030576	1	1				DGK		
		1	5				DGK		
5									THRUST WASHER, Annulus Gear
	03681969	1	1				DGK		
		1	5				DGK		
6									SNAP RING
	06035238	1	1				DGK		
		1	5				DGK		
7									SUPPORT, Annulus Gear
	04617774	1	1				DGK		
		1	5				DGK		
8									GEAR, Front Annulus
	04130512	1	1				DGK		
		1	5				DGK		
9									THRUST WASHER, Planetary Carrier
	04130518	2	1				DGK		
		2	5				DGK		
10									CARRIER, Planetary Pinion
	04130514	1	1				DGK		

DAKOTA (AN)

SERIES	LINE	BODY	ENGINE	TRANSMISSION
L = Dakota (All)	1 = Dakota 2WD	61 = Regular Cab (112 WB)	EPE = 2.5L 4 Cylinder	DGK = 4 Speed Automatic 42RE
	5 = Dakota 4WD	31 = Club Cab (131 WB)	EHC = 3.9L 6 Cylinder	DGT = 4 Speed Automatic 46RE
		84 = Quad Cab (131 WB)	EML = 5.0L 8 Cylinder	DDC = 5 Speed HD Manual
			EVA = 4.7L Magnum V8	DDK = 5 Speed HD Manual
			EP0 = All 2.5L	DG4 = Multispeed Automatic 45RFE
			EH0 = All 3.9L	DG0 = All Automatic Transmissions
			EM0 = All 5.9L	DBB = All Manual Transmissions
			EV0 = All 4.7L	

AR = use ase required - = Non illustrrated part

Gear Train & Intermediate [DGK]
Figure 42RE-420

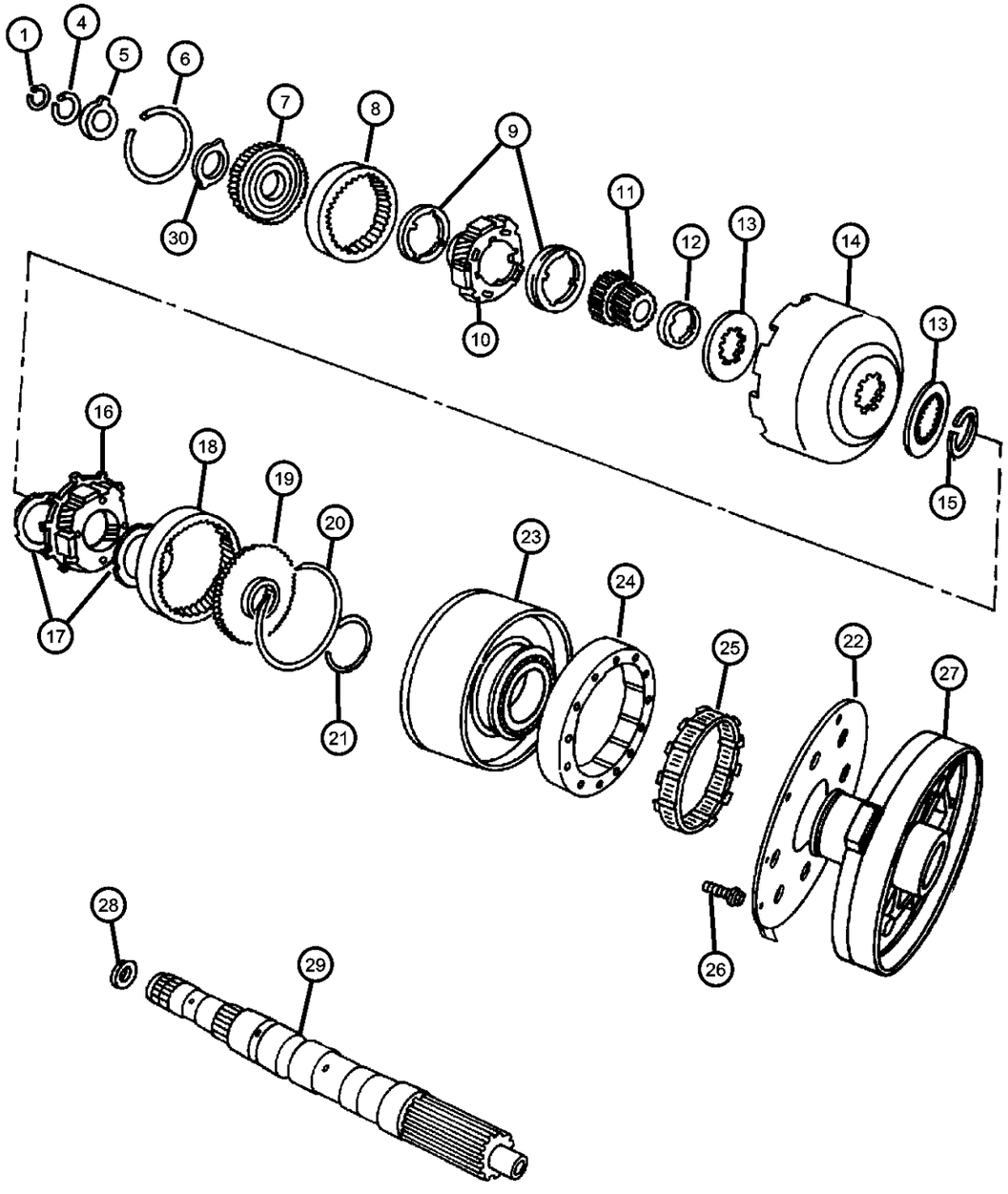

ITEM	PART NUMBER	QTY	LINE	SERIES	BODY	ENGINE	TRANS	TRIM	DESCRIPTION
		1	5				DGK		
11									GEAR, Sun
	04130685	1	1				DGK		
		1	5				DGK		
12									SPACER, Sun Gear
	04130736	1	1				DGK		
		1	5				DGK		
13									PLATE, Transmission Module
	04471566	2	1				DGK		
		2	5				DGK		
14									SHELL, Sun Gear
	04531288	1	1				DGK		
		1	5				DGK		
15									SNAP RING, Sun Gear Shell
	01942439	1	1				DGK		
		1	5				DGK		
16									CARRIER, Planetary Pinion
	04431438	1	1				DGK		
		1	5				DGK		
17									THRUST WASHER, Planetary Carrier
	03681935	1	1				DGK		
		1	5				DGK		
18									GEAR, Rear Annulus
	03743184	1	1				DGK		
		1	5				DGK		
19									SUPPORT, Annulus Gear
	03515501	1	1				DGK		
		1	5				DGK		
20									SNAP RING
	01942444	1	1				DGK		
		1	5				DGK		
21									SNAP RING, Reverse Drum

DAKOTA (AN)

SERIES	LINE	BODY	ENGINE	TRANSMISSION
L = Dakota (All)	1 = Dakota 2WD 5 = Dakota 4WD	61 = Regular Cab (112 WB) 31 = Club Cab (131 WB) 84 = Quad Cab (131 WB)	EPE = 2.5L 4 Cylinder EHC = 3.9L 6 Cylinder EML = 5.0L 8 Cylinder EVA = 4.7L Magnum V8 EP0 = All 2.5L EH0 = All 3.9L EM0 = All 5.9L EV0 = All 4.7L	DGK = 4 Speed Automatic 42RE DGT = 4 Speed Automatic 46RE DDC = 5 Speed HD Manual DDK = 5 Speed HD Manual DG4 = Multispeed Automatic 45RFE DG0 = All Automatic Transmissions DBB = All Manual Transmissions

AR = use ase required - = Non illustrrated part

Gear Train & Intermediate [DGK]
Figure 42RE-420

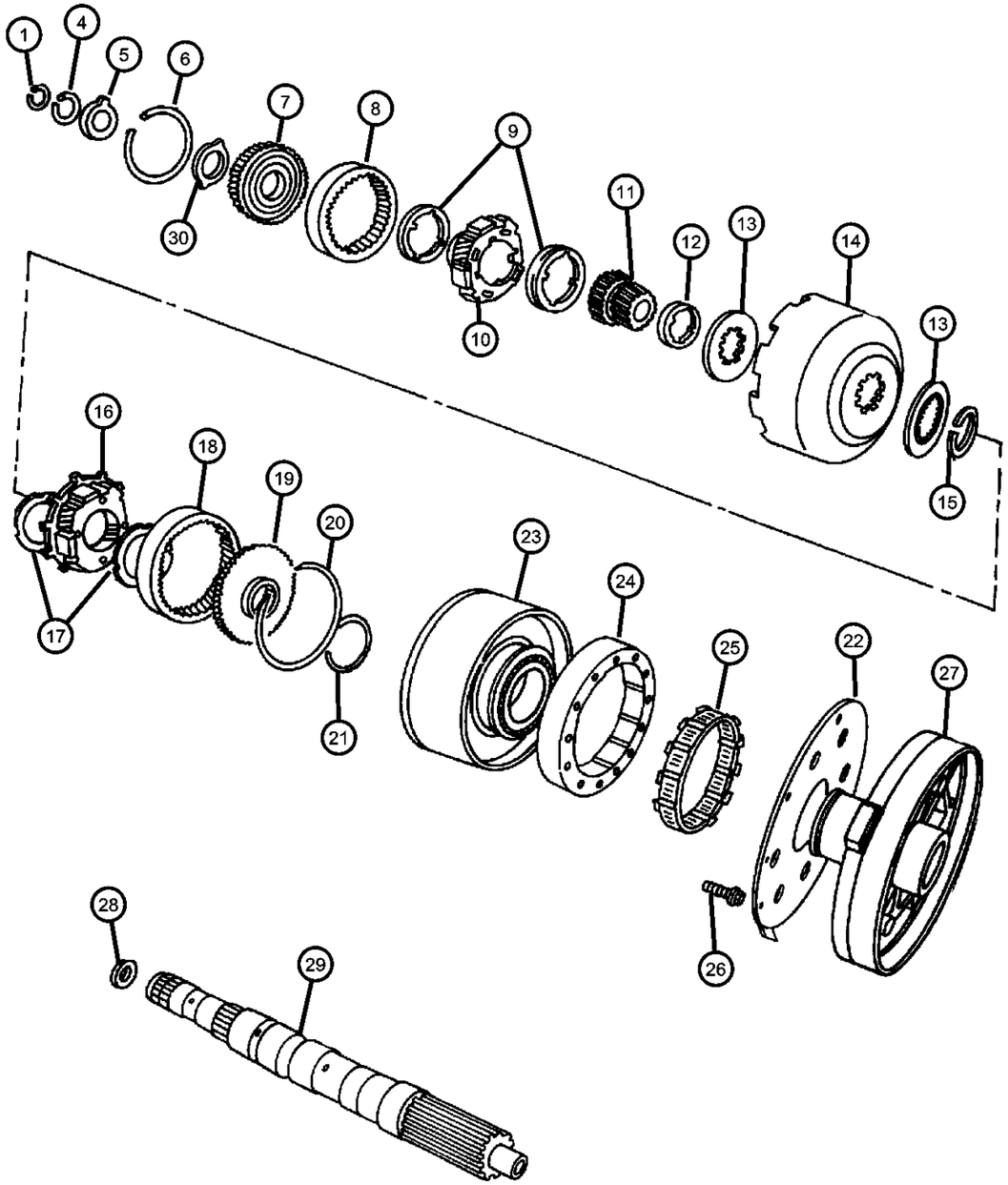

ITEM	PART NUMBER	QTY	LINE	SERIES	BODY	ENGINE	TRANS	TRIM	DESCRIPTION
	06033480	1	1				DGK		
		1	5				DGK		
22									GASKET, Overdrive Piston Retainer
	04471564	1	1				DGK		
		1	5				DGK		
23									DRUM PACKAGE, Transmission
	04637956	1	1				DGK		
		1	5				DGK		
24									CAM, Overrunning Clutch
	04431690	1	1				DGK		
		1	5				DGK		
25									CLUTCH, Overrunning
	04431432	1	1				DGK		
		1	5				DGK		
26									SCREW, Hex Flange Head, .25-28x.875
	06033616	5	1				DGK		
		5	5				DGK		
27									RETAINER, Transmission Overdrive Clutch Piston
	04617246	1	1				DGK		
		1	5				DGK		
28									PLATE, Transmission Module
	04505188	1	1				DGK		
		1	5				DGK		
29									INTERMEDIATE SHAFT, Transmission
	04617604	1	1				DGK		
		1	5				DGK		
30									PLATE, Annulus Gear Thrust
	04617775	1	1				DGK		
		1	5				DGK		

DAKOTA (AN)

SERIES	LINE	BODY	ENGINE	TRANSMISSION
L = Dakota (All)	1 = Dakota 2WD	61 = Regular Cab (112 WB)	EPE = 2.5L 4 Cylinder	DGK = 4 Speed Automatic 42RE
	5 = Dakota 4WD	31 = Club Cab (131 WB)	EHC = 3.9L 6 Cylinder	DGT = 4 Speed Automatic 46RE
		84 = Quad Cab (131 WB)	EML = 5.0L 8 Cylinder	DDC = 5 Speed HD Manual
			EVA = 4.7L Magnum V8	DDK = 5 Speed HD Manual
			EP0 = All 2.5L	DG4 = Multispeed Automatic 45RFE
			EH0 = All 3.9L	DG0 = All Automatic Transmissions
			EM0 = All 5.9L	DBB = All Manual Transmissions
			EV0 = All 4.7L	

AR = use ase required - = Non illustrrated part

Output Shaft [DGK]
Figure 42RE-430

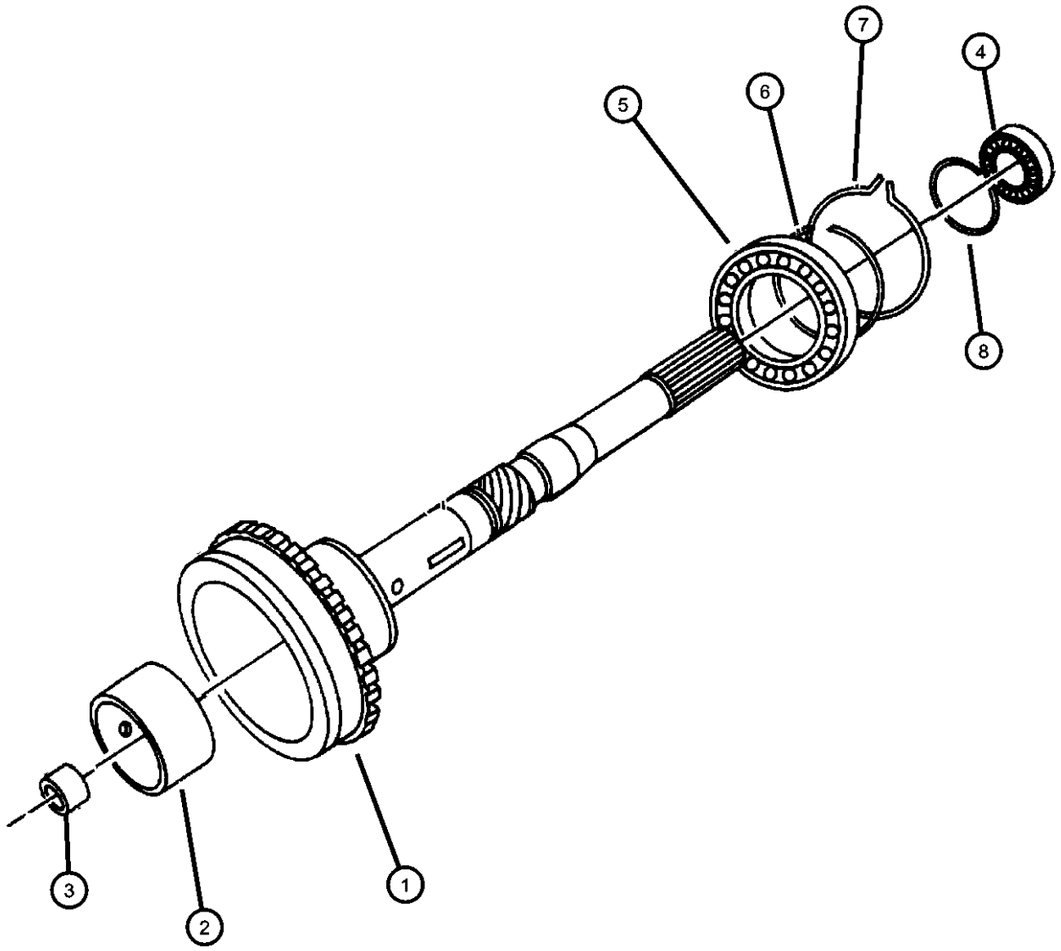

ITEM	PART NUMBER	QTY	LINE	SERIES	BODY	ENGINE	TRANS	TRIM	DESCRIPTION
NOTE:									
[DGK]=42RE 4 Speed Automatic Transmission									
1									SHAFT, Output
	04798536	1	5				DGK		
	05003232AA	1	1				DGK		
2	05003232AA	1							BUSHING, (NOT SERVICED)
3	05003232AA	1							BUSHING, (NOT SERVICED)
4									BEARING, Output Shaft
	02466224	1	5						
		1	1				DGK		
5									BEARING, Output Shaft
	04461008	1	1				DGK		Front
		1	5				DGK		Front
6									SNAP RING
	04461068	1	1				DGK		
		1	5				DGK		
7									SNAP RING
	04461057	1	1				DGK		
		1	5				DGK		
8	04461069	1	1				DGK		SNAP RING

DAKOTA (AN)

SERIES	LINE	BODY	ENGINE	TRANSMISSION
L = Dakota (All)	1 = Dakota 2WD	61 = Regular Cab (112 WB)	EPE = 2.5L 4 Cylinder	DGK = 4 Speed Automatic 42RE
	5 = Dakota 4WD	31 = Club Cab (131 WB)	EHC = 3.9L 6 Cylinder	DGT = 4 Speed Automatic 46RE
		84 = Quad Cab (131 WB)	EML = 5.0L 8 Cylinder	DDC = 5 Speed HD Manual
			EVA = 4.7L Magnum V8	DDK = 5 Speed HD Manual
			EP0 = All 2.5L	DG4 = Multispeed Automatic 45RFE
			EH0 = All 3.9L	DG0 = All Automatic Transmissions
			EM0 = All 5.9L	DBB = All Manual Transmissions
			EV0 = All 4.7L	

Bands [DGK]
Figure 42RE-510

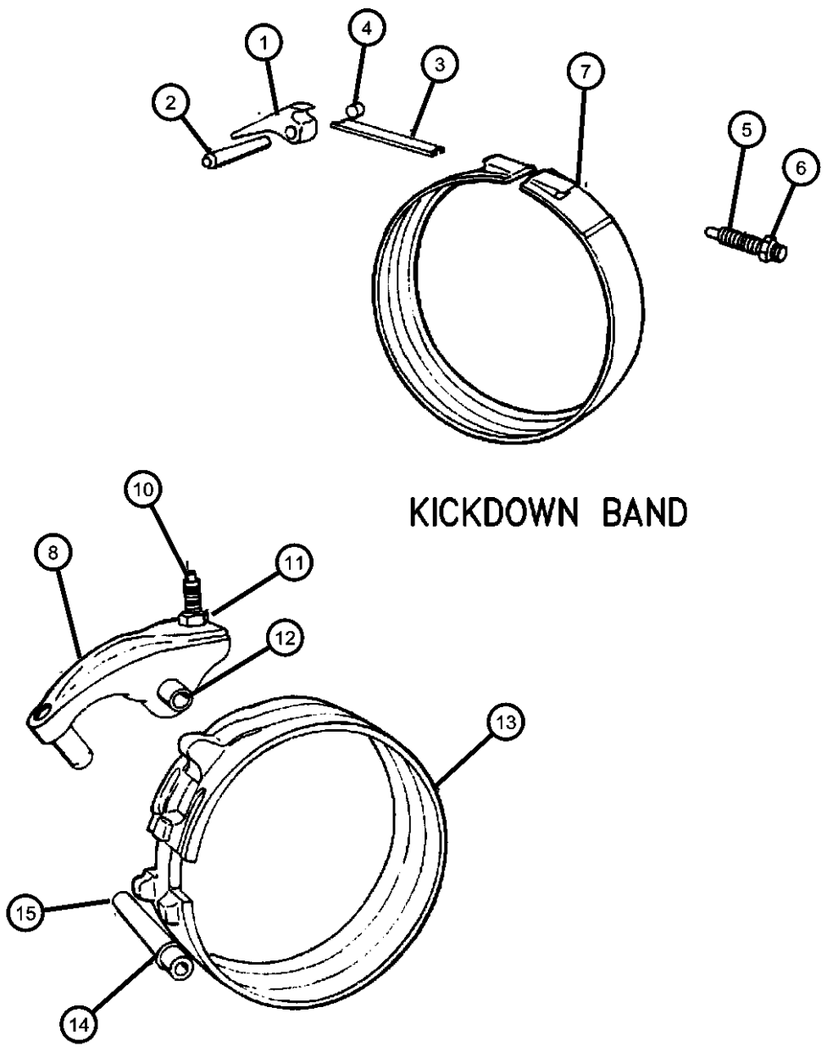

ITEM	PART NUMBER	QTY	LINE	SERIES	BODY	ENGINE	TRANS	TRIM	DESCRIPTION
NOTE:									
Sales Codes:									
[DGK]=42RE 4 Speed Automatic Transmission									
1									LEVER, Kickdown
	52118264	1	1				DGK		
		1	5				DGK		
2									SHAFT, Band Lever
	04531181	1	1				DGK		
		1	5				DGK		
3									STRUT, Kickdown Band
	03515084	1	1				DGK		
		1	5				DGK		
4		1							PLUG, (NOT SERVICED)
5									SCREW
	06036141AA	1	1				DGK		
		1	5				DGK		
6									NUT, Hex Jam, .50-20
	00124934	1	1				DGK		
		1	5				DGK		
7									BAND, Kickdown
	04617849	1	1				DGK		
		1	5				DGK		
8									LEVER, Reverse Band
	04202764AB	1	1				DGK		
		1	5				DGK		
-9									LEVER, Reverse Band
	04202764AB	1	1				DGK		
		1	5				DGK		
10									SCREW, Trans Reverse Band Adjusting, .375-24-1.88
	02538472	1	1				DGK		
		1	5				DGK		
11									NUT, Hex Jam, .50-20
	00124934	1	1				DGK		

DAKOTA (AN)

SERIES	LINE	BODY	ENGINE	TRANSMISSION
L = Dakota (All)	1 = Dakota 2WD	61 = Regular Cab (112 WB)	EPE = 2.5L 4 Cylinder	DGK = 4 Speed Automatic 42RE
	5 = Dakota 4WD	31 = Club Cab (131 WB)	EHC = 3.9L 6 Cylinder	DGT = 4 Speed Automatic 46RE
		84 = Quad Cab (131 WB)	EML = 5.0L 8 Cylinder	DDC = 5 Speed HD Manual
			EVA = 4.7L Magnum V8	DDK = 5 Speed HD Manual
			EP0 = All 2.5L	DG4 = Multispeed Automatic 45RFE
			EH0 = All 3.9L	DG0 = All Automatic Transmissions
			EM0 = All 5.9L	DBB = All Manual Transmissions
			EV0 = All 4.7L	

Bands [DGK]
Figure 42RE-510

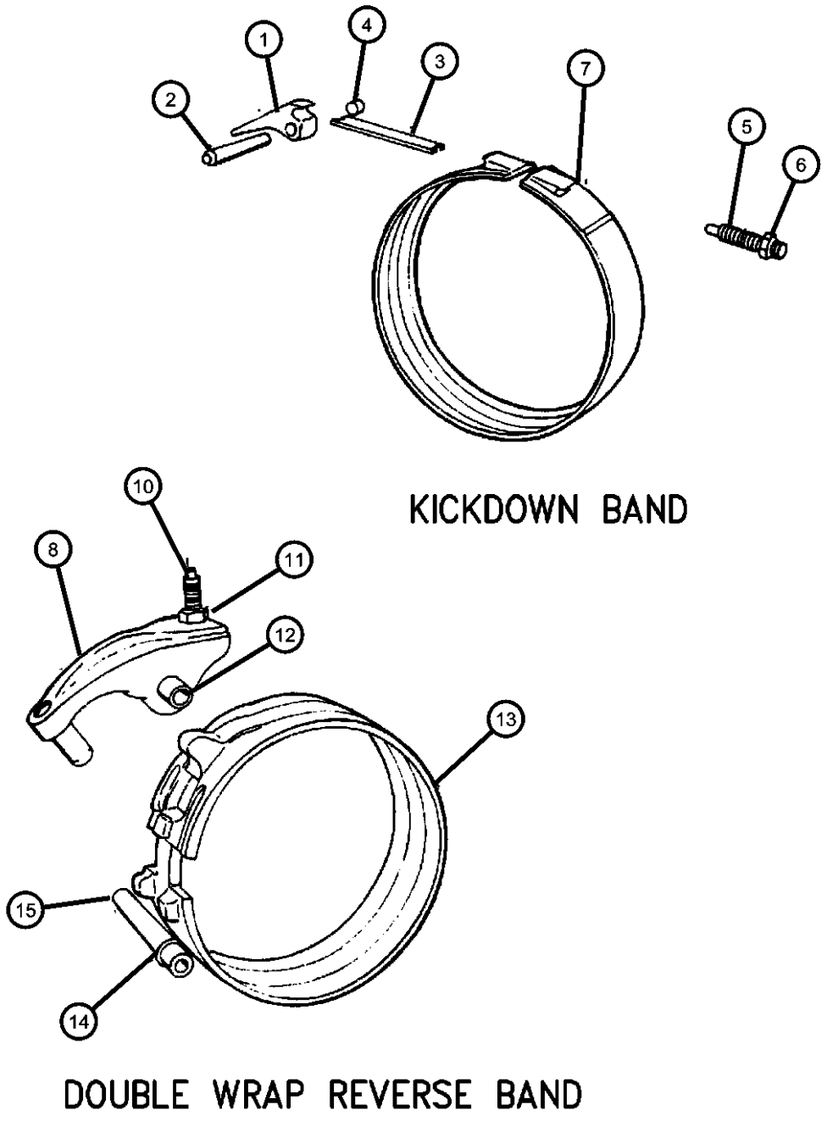

ITEM	PART NUMBER	QTY	LINE	SERIES	BODY	ENGINE	TRANS	TRIM	DESCRIPTION
		1	5				DGK		
12									SHAFT, Reverse Band
	03410102	1	1				DGK		
		1	5				DGK		
13									BAND, Reverse
	04431406	1	1				DGK		
		1	5				DGK		
14	01556385	1	1				DGK		O RING
15									SHAFT, Reverse Band
	03410102	1	1				DGK		
		1	5				DGK		

DAKOTA (AN)

SERIES	LINE	BODY	ENGINE	TRANSMISSION
L = Dakota (All)	1 = Dakota 2WD	61 = Regular Cab (112 WB)	EPE = 2.5L 4 Cylinder	DGK = 4 Speed Automatic 42RE
	5 = Dakota 4WD	31 = Club Cab (131 WB)	EHC = 3.9L 6 Cylinder	DGT = 4 Speed Automatic 46RE
		84 = Quad Cab (131 WB)	EML = 5.0L 8 Cylinder	DDC = 5 Speed HD Manual
			EVA = 4.7L Magnum V8	DDK = 5 Speed HD Manual
			EP0 = All 2.5L	DG4 = Multispeed Automatic 45RFE
			EH0 = All 3.9L	DG0 = All Automatic Transmissions
			EM0 = All 5.9L	DBB = All Manual Transmissions
			EV0 = All 4.7L	

Valve Body [DGK]
Figure 42RE-710

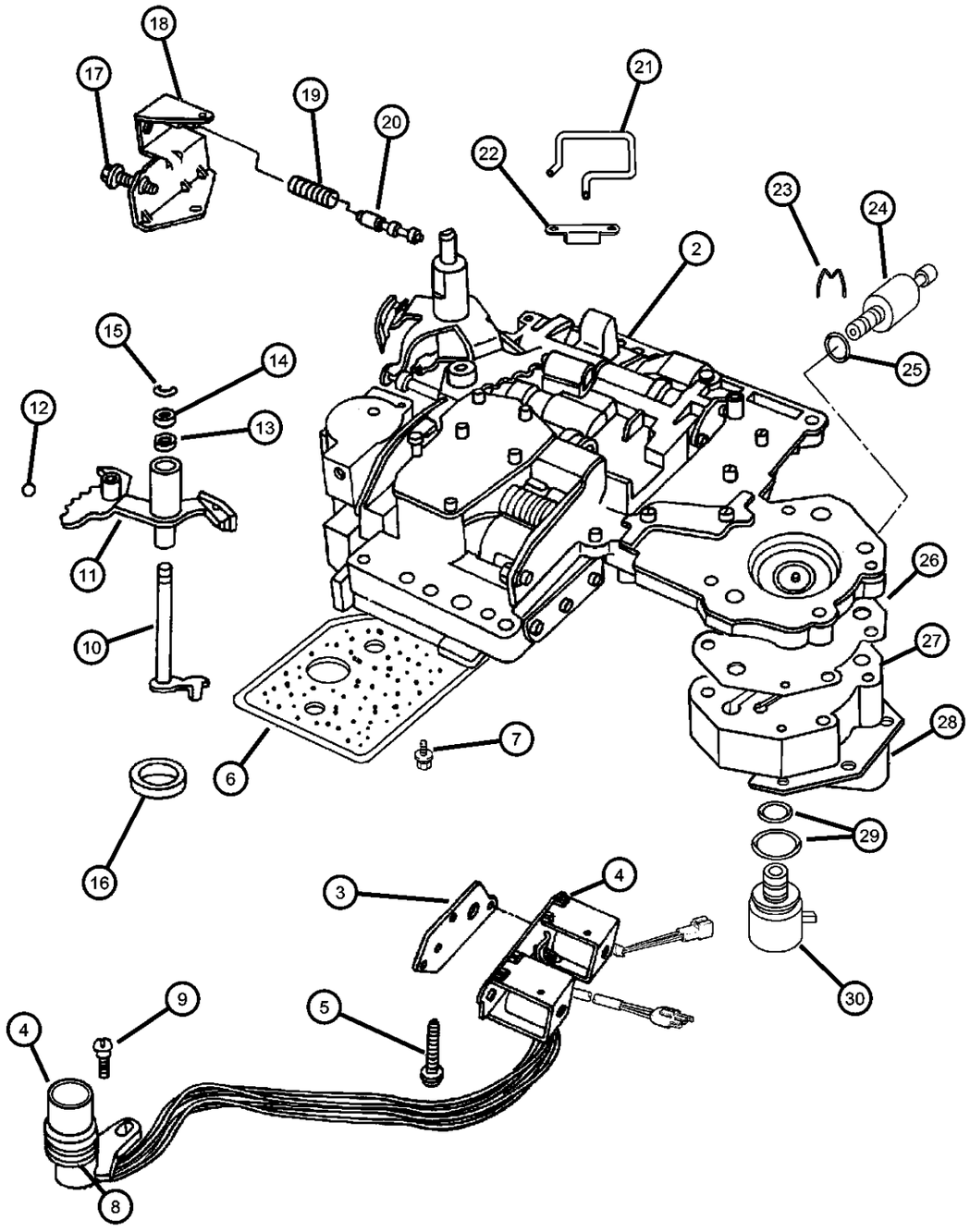

ITEM	PART NUMBER	QTY	LINE	SERIES	BODY	ENGINE	TRANS	TRIM	DESCRIPTION
NOTE:									
Sales Code:									
[DGK]=42RE 4 Speed Automatic Transmission									
-1									SEAL AND GASKET PACKAGE, Valve Body and Servo
	04863933AC	1	1				DGK		
		1	5				DGK		
2									BODY, Transfer Plate
	52119633AC	1	1				DGK		
		1	5				DGK		
3									GASKET, Transmission Solenoid
	04617216	1	1				DGK		
		1	5				DGK		
4									SOLENOID, Transmission Overdrive
	52118500AB	1	1				DGK		
		1	5				DGK		
5									BOLT, Valve Body, .25-20x1.75
	00181071	3	1				DGK		
		3	5				DGK		
6									FILTER, Valve Body
	52118789	1	1				DGK		
		1	5				DGK		
7									SCREW AND WASHER, Oil Filter Mounting, Fillester Head .190-24x2.500
	06033826	3	1				DGK		
		3	5				DGK		
8									O RING, Solenoid Wiring, Transmission
	06034748	1	1				DGK		
		1	5				DGK		
9									SCREW, Tapping, .19-24x.75
	06033985	1	1				DGK		
		1	5				DGK		
10									LEVER, Throttle Valve

DAKOTA (AN)

SERIES	LINE	BODY	ENGINE	TRANSMISSION
L = Dakota (All)	1 = Dakota 2WD	61 = Regular Cab (112 WB)	EPE = 2.5L 4 Cylinder	DGK = 4 Speed Automatic 42RE
	5 = Dakota 4WD	31 = Club Cab (131 WB)	EHC = 3.9L 6 Cylinder	DGT = 4 Speed Automatic 46RE
		84 = Quad Cab (131 WB)	EML = 5.0L 8 Cylinder	DDC = 5 Speed HD Manual
			EVA = 4.7L Magnum V8	DDK = 5 Speed HD Manual
			EP0 = All 2.5L	DG4 = Multispeed Automatic 45RFE
			EH0 = All 3.9L	DG0 = All Automatic Transmissions
			EM0 = All 5.9L	DBB = All Manual Transmissions
			EV0 = All 4.7L	

Valve Body [DGK]
Figure 42RE-710

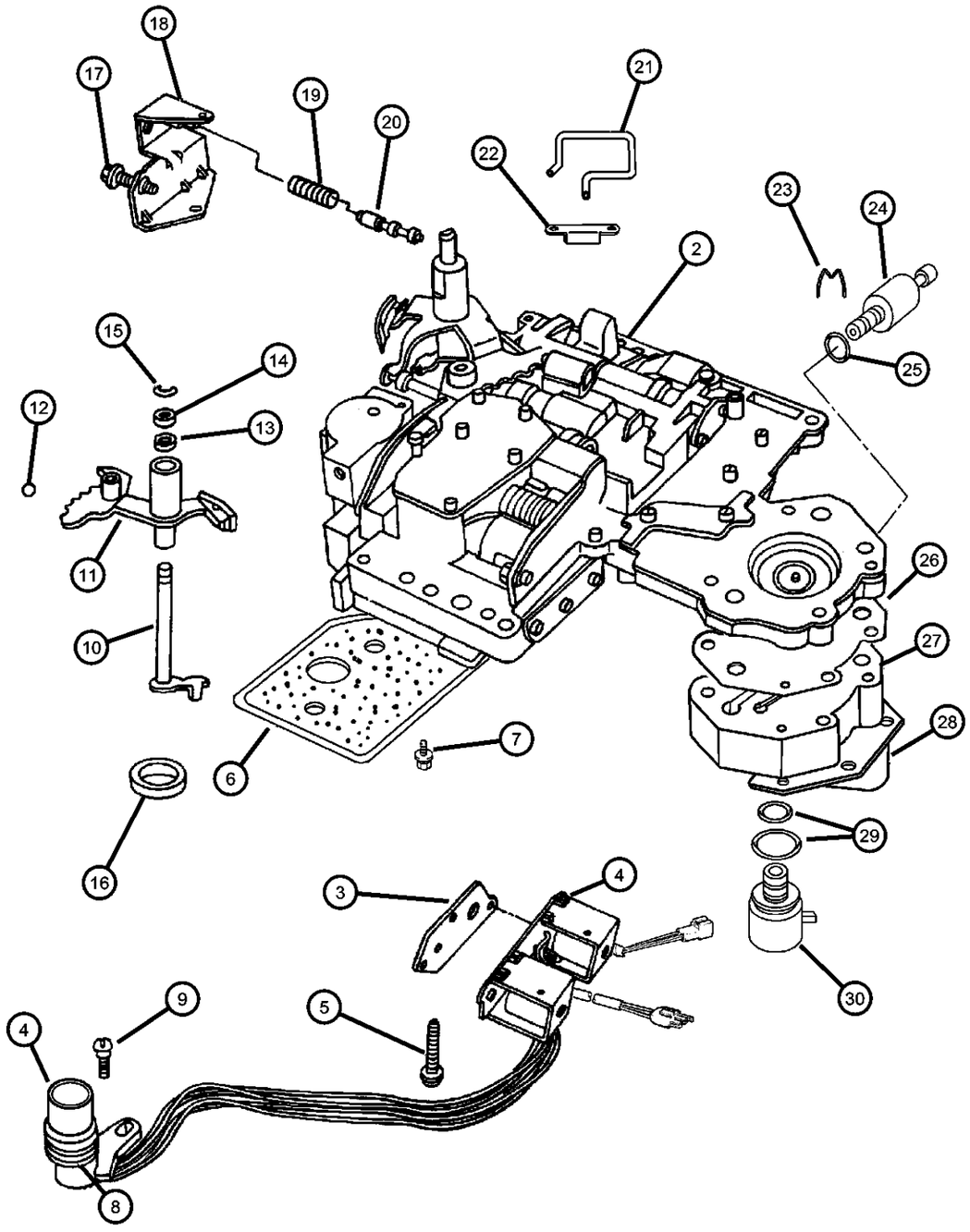

ITEM	PART NUMBER	QTY	LINE	SERIES	BODY	ENGINE	TRANS	TRIM	DESCRIPTION
	03681227	1	1				DGK		
		1	5				DGK		
11									LEVER, Manual Valve
	04617437AB	1	1				DGK		
		1	5				DGK		
12									BALL, Manual Lever Detent, .343 Diameter
	00147488	1	1				DGK		
		1	5				DGK		
13									SEAL, Valve Lever Shift
	02466548	1	1				DGK		
		1	5				DGK		
14									WASHER, Manual Valve Lever
	02538062	1	1				DGK		
		1	5				DGK		
15									SNAP RING
	06035208	2	1				DGK		
		2	5				DGK		
16									SEAL, Manual Shift Valve, 1.25 OD
	04505098	1	1				DGK		
		1	5				DGK		
17									SCREW, Cap Head Lock, .312-24x1.25
	06030609	1	1				DGK		
		1	5				DGK		
18									BRACKET, Valve Body Switch
	04617010	1	1				DGK		
		1	5				DGK		
19									SPRING, Switch Valve
	04130492	1	1				DGK		
		1	5				DGK		
20									VALVE, Trans Lockup Switch
	04505036	1	1				DGK		

DAKOTA (AN)

SERIES	LINE	BODY	ENGINE	TRANSMISSION
L = Dakota (All)	1 = Dakota 2WD	61 = Regular Cab (112 WB)	EPE = 2.5L 4 Cylinder	DGK = 4 Speed Automatic 42RE
	5 = Dakota 4WD	31 = Club Cab (131 WB)	EHC = 3.9L 6 Cylinder	DGT = 4 Speed Automatic 46RE
		84 = Quad Cab (131 WB)	EML = 5.0L 8 Cylinder	DDC = 5 Speed HD Manual
			EVA = 4.7L Magnum V8	DDK = 5 Speed HD Manual
			EP0 = All 2.5L	DG4 = Multispeed Automatic 45RFE
			EH0 = All 3.9L	DG0 = All Automatic Transmissions
			EM0 = All 5.9L	DBB = All Manual Transmissions
			EV0 = All 4.7L	

AR = use ase required - = Non illustrrated part

Valve Body [DGK]
Figure 42RE-710

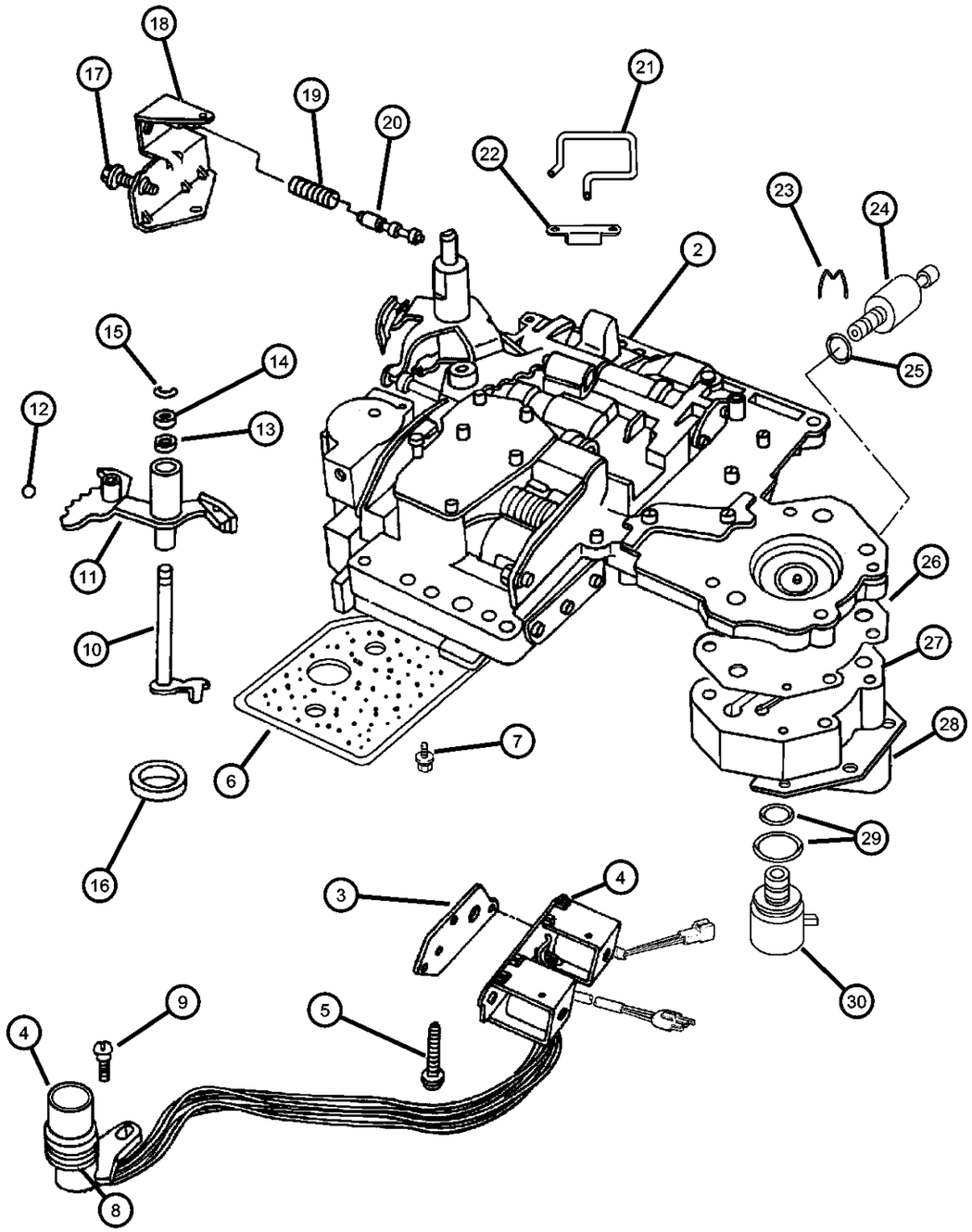

ITEM	PART NUMBER	QTY	LINE	SERIES	BODY	ENGINE	TRANS	TRIM	DESCRIPTION
		1	5				DGK		
21									TUBE, Boost Valve
	04617008	1	1				DGK		
		1	5				DGK		
22									RETAINER, Boost Valve Oil Supply Tube
	52117958	1	1				DGK		
		1	5				DGK		
23									CLIP, Transmission Governor Transducer
	04617219	1	1				DGK		
		1	5				DGK		
24									TRANSDUCER, Pressure Sensor
	56028196AA	1	1				DGK		
		1	5				DGK		
25		1							O RING, Pressure Switch, (NOT SERVICED)
26									GASKET, Transmission Solenoid
	04617216	1	1				DGK		
		1	5				DGK		
27		1							BODY, Governor, Serviced With Valve Body, (NOT SERVICED)
28									RETAINER, Transmission Governor Solenoid
	52117937AB	1	1				DGK		
		1	5				DGK		
29									O RING PACKAGE, Valve Body, Transmission
	04723549	1	1				DGK		
		1	5				DGK		
30									SOLENOID, Transmission Governor
	04617210	1	1				DGK		
		1	5				DGK		
-31									SCREEN, Transmission Regulator Valve
	03878313	1	1				DGK		

DAKOTA (AN)

SERIES	LINE	BODY	ENGINE	TRANSMISSION
L = Dakota (All)	1 = Dakota 2WD	61 = Regular Cab (112 WB)	EPE = 2.5L 4 Cylinder	DGK = 4 Speed Automatic 42RE
	5 = Dakota 4WD	31 = Club Cab (131 WB)	EHC = 3.9L 6 Cylinder	DGT = 4 Speed Automatic 46RE
		84 = Quad Cab (131 WB)	EML = 5.0L 8 Cylinder	DDC = 5 Speed HD Manual
			EVA = 4.7L Magnum V8	DDK = 5 Speed HD Manual
			EP0 = All 2.5L	DG4 = Multispeed Automatic 45RFE
			EH0 = All 3.9L	DG0 = All Automatic Transmissions
			EM0 = All 5.9L	DBB = All Manual Transmissions
			EV0 = All 4.7L	

AR = use ase required - = Non illustrrated part

<< RETURN TO GROUP INDEX

Valve Body [DGK]
Figure 42RE-710

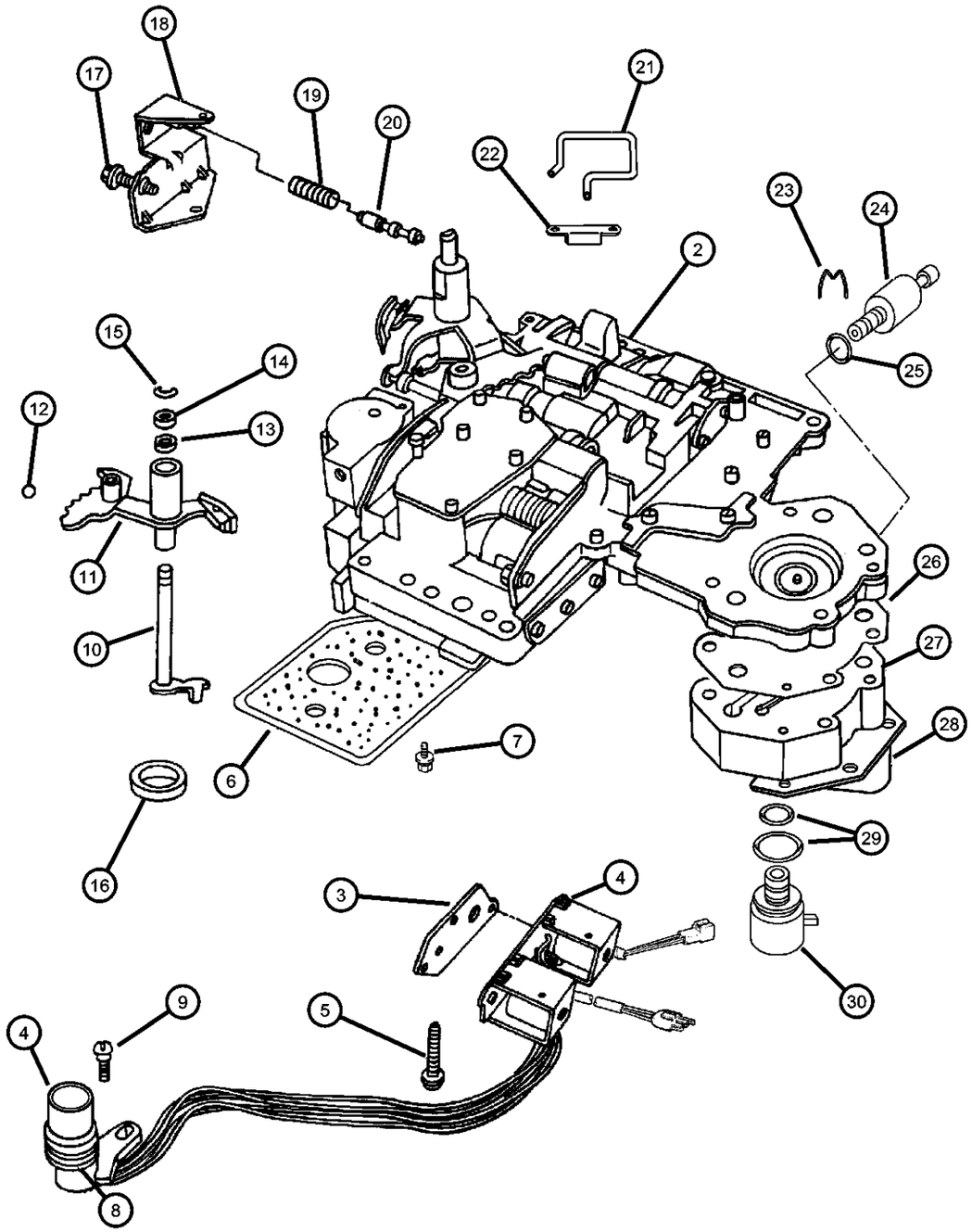

ITEM	PART NUMBER	QTY	LINE	SERIES	BODY	ENGINE	TRANS	TRIM	DESCRIPTION
		1	5				DGK		
-32									SPRING, Limit Valve
	04348907	1	1				DGK		
		1	5				DGK		

DAKOTA (AN)

SERIES	LINE	BODY	ENGINE	TRANSMISSION
L = Dakota (All)	1 = Dakota 2WD	61 = Regular Cab (112 WB)	EPE = 2.5L 4 Cylinder	DGK = 4 Speed Automatic 42RE
	5 = Dakota 4WD	31 = Club Cab (131 WB)	EHC = 3.9L 6 Cylinder	DGT = 4 Speed Automatic 46RE
		84 = Quad Cab (131 WB)	EML = 5.0L 8 Cylinder	DDC = 5 Speed HD Manual
			EVA = 4.7L Magnum V8	DDK = 5 Speed HD Manual
			EP0 = All 2.5L	DG4 = Multispeed Automatic 45RFE
			EH0 = All 3.9L	DG0 = All Automatic Transmissions
			EM0 = All 5.9L	DBB = All Manual Transmissions
			EV0 = All 4.7L	

AR = use ase required - = Non illustrrated part

Servos [DGK]
Figure 42RE-720

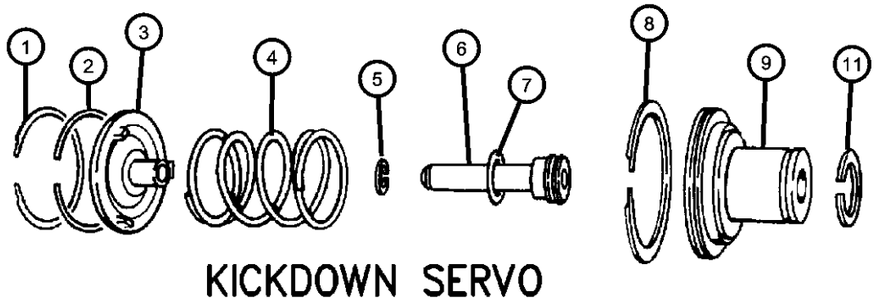

KICKDOWN SERVO

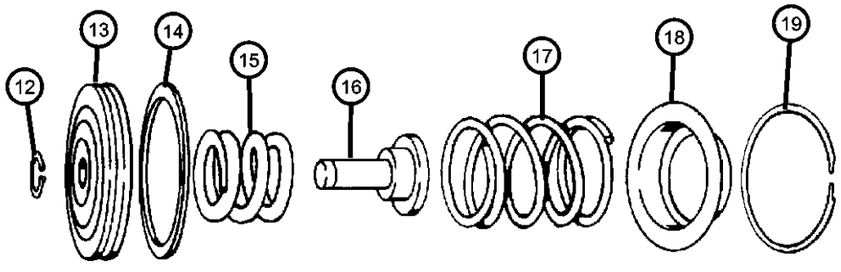

LOW AND REVERSE SERVO

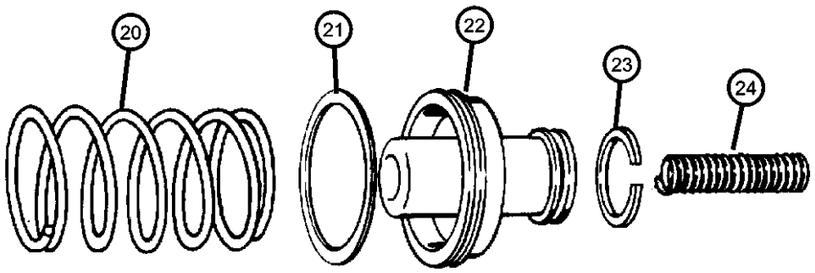

ACCUMULATOR PISTON AND SPRING

ITEM	PART NUMBER	QTY	LINE	SERIES	BODY	ENGINE	TRANS	TRIM	DESCRIPTION
NOTE:									
Sales Codes:									
[DGK]=42 RE 4 Speed Automatic Transmission									
1									SNAP RING, Kickdown, 2.377
	06028863	1	1				DGK		
		1	5				DGK		
2									SEAL, Servo Guide
	04295966	1	1				DGK		
		1	5				DGK		
3									GUIDE, Kickdown Servo
	03410332	1	1				DGK		
		1	5				DGK		
4									SPRING, Kickdown Servo Piston
	04531119	1	1				DGK		
		1	5				DGK		
5									SNAP RING, Brake Master Cylinder
	06031392	1	1				DGK		
		1	5				DGK		
6									ROD, Kickdown Servo Piston
	04058780	1	1				DGK		
		1	5				DGK		
7									O RING, Kick Down Servo
	06028864	1	1				DGK		
		1	5				DGK		
8									SEAL, Servo Guide
	04295966	1	1				DGK		
		1	5				DGK		
9									PISTON, Kickdown Servo
	04058777	1	1				DGK		
		1	5				DGK		
-10									O RING, Kick Down Servo
	06028864	1	1				DGK		
		1	5				DGK		

DAKOTA (AN)

SERIES	LINE	BODY	ENGINE	TRANSMISSION
L = Dakota (All)	1 = Dakota 2WD	61 = Regular Cab (112 WB)	EPE = 2.5L 4 Cylinder	DGK = 4 Speed Automatic 42RE
	5 = Dakota 4WD	31 = Club Cab (131 WB)	EHC = 3.9L 6 Cylinder	DGT = 4 Speed Automatic 46RE
		84 = Quad Cab (131 WB)	EML = 5.0L 8 Cylinder	DDC = 5 Speed HD Manual
			EVA = 4.7L Magnum V8	DDK = 5 Speed HD Manual
			EP0 = All 2.5L	DG4 = Multispeed Automatic 45RFE
			EH0 = All 3.9L	DG0 = All Automatic Transmissions
			EM0 = All 5.9L	DBB = All Manual Transmissions
			EV0 = All 4.7L	

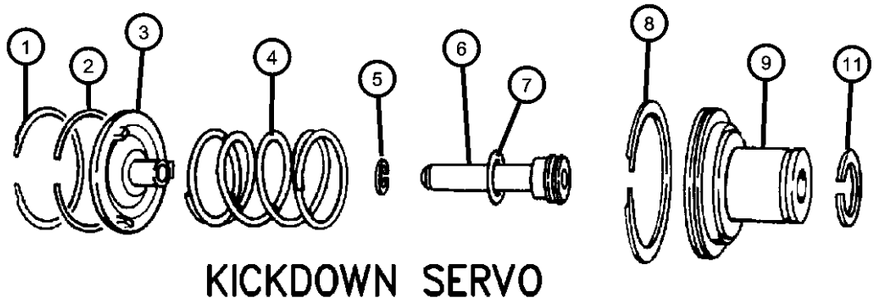

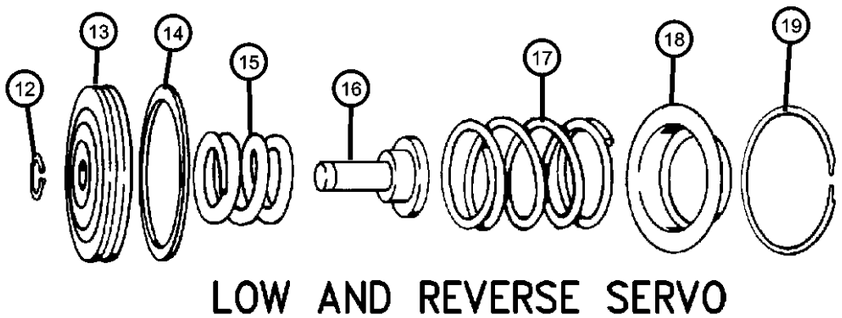

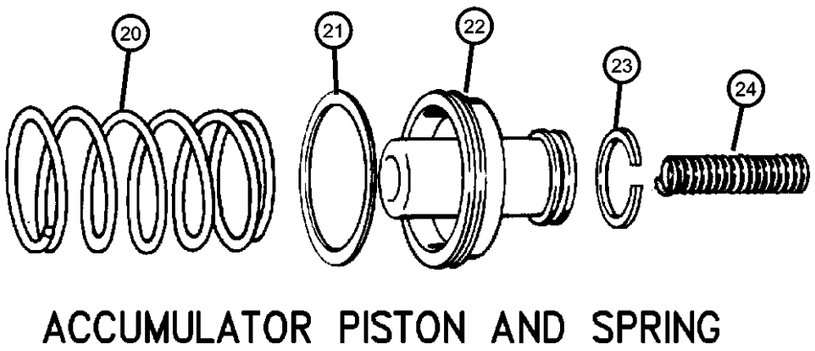

ITEM	PART NUMBER	QTY	LINE	SERIES	BODY	ENGINE	TRANS	TRIM	DESCRIPTION
11									SEAL, Kickdown Servo
	03743033	1	1				DGK		
		1	5				DGK		
12									SNAP RING, .435 ID
	06027153	1	1				DGK		
		1	5				DGK		
13									PISTON, Reverse Servo
	52118744	1	1				DGK		
		1	5				DGK		
14									SEAL, Reverse Servo Piston
	04202864	1	1				DGK		
		1	5				DGK		
15									SPRING, Reverse Servo Piston
	02801274	1	1				DGK		
		1	5				DGK		
16									PLUG, Reverse Servo Piston
	52118740AB	1	1				DGK		
		1	5				DGK		
17									SPRING, Reverse Servo Piston
	02801274	1	1				DGK		
		1	5				DGK		
18									RETAINER, Transmission Rear Clutch
	02464463	1	1				DGK		
		1	5				DGK		
19									SNAP RING
	02464464	1	1				DGK		
		1	5				DGK		
20									SPRING, Transmission Accumulator
	04531259	1	1				DGK		
		1	5				DGK		
21									SEAL, Piston Accumulator

DAKOTA (AN)

SERIES	LINE	BODY	ENGINE	TRANSMISSION
L = Dakota (All)	1 = Dakota 2WD	61 = Regular Cab (112 WB)	EPE = 2.5L 4 Cylinder	DGK = 4 Speed Automatic 42RE
	5 = Dakota 4WD	31 = Club Cab (131 WB)	EHC = 3.9L 6 Cylinder	DGT = 4 Speed Automatic 46RE
		84 = Quad Cab (131 WB)	EML = 5.0L 8 Cylinder	DDC = 5 Speed HD Manual
			EVA = 4.7L Magnum V8	DDK = 5 Speed HD Manual
			EP0 = All 2.5L	DG4 = Multispeed Automatic 45RFE
			EH0 = All 3.9L	DG0 = All Automatic Transmissions
			EM0 = All 5.9L	DBB = All Manual Transmissions
			EV0 = All 4.7L	

Servos [DGK]
Figure 42RE-720

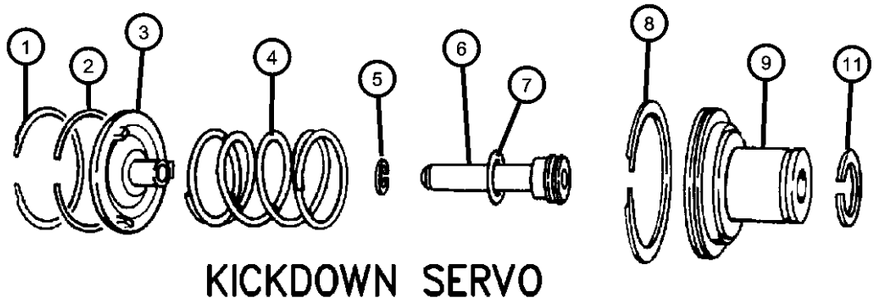

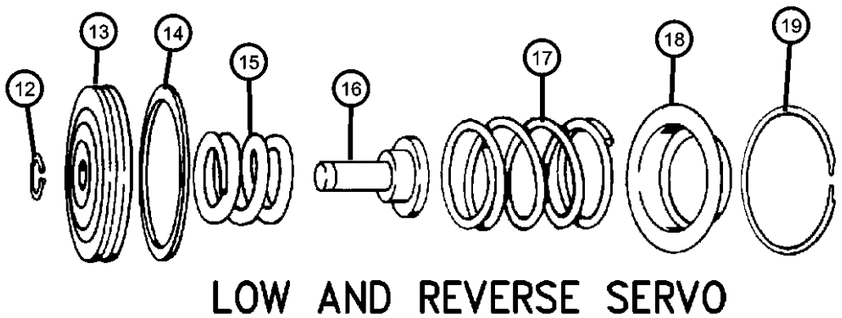

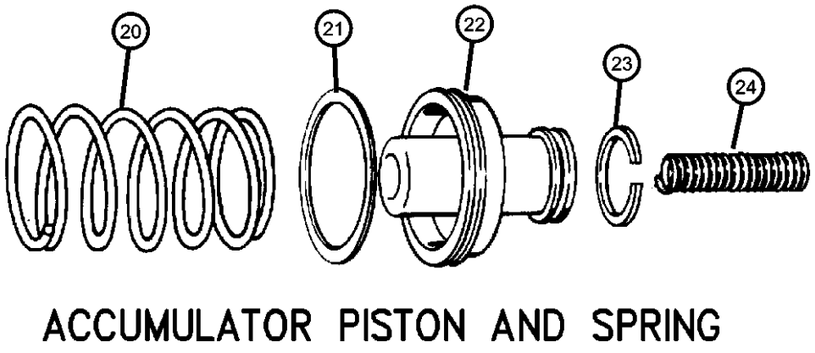

ITEM	PART NUMBER	QTY	LINE	SERIES	BODY	ENGINE	TRANS	TRIM	DESCRIPTION
	03743013	1	1				DGK		
		1	5				DGK		
22									PISTON, Accumulator
	03743650	1	1				DGK		
		1	5				DGK		
23									SEAL, Piston Accumulator
	03743010	1	1				DGK		
		1	5				DGK		
24									SPRING, Accumulator Piston
	04617529	1	1				DGK		
		1	5				DGK		

DAKOTA (AN)

SERIES	LINE	BODY	ENGINE	TRANSMISSION
L = Dakota (All)	1 = Dakota 2WD	61 = Regular Cab (112 WB)	EPE = 2.5L 4 Cylinder	DGK = 4 Speed Automatic 42RE
	5 = Dakota 4WD	31 = Club Cab (131 WB)	EHC = 3.9L 6 Cylinder	DGT = 4 Speed Automatic 46RE
		84 = Quad Cab (131 WB)	EML = 5.0L 8 Cylinder	DDC = 5 Speed HD Manual
			EVA = 4.7L Magnum V8	DDK = 5 Speed HD Manual
			EP0 = All 2.5L	DG4 = Multispeed Automatic 45RFE
			EH0 = All 3.9L	DG0 = All Automatic Transmissions
			EM0 = All 5.9L	DBB = All Manual Transmissions
			EV0 = All 4.7L	

Parking Sprag [DGK]
Figure 42RE-730

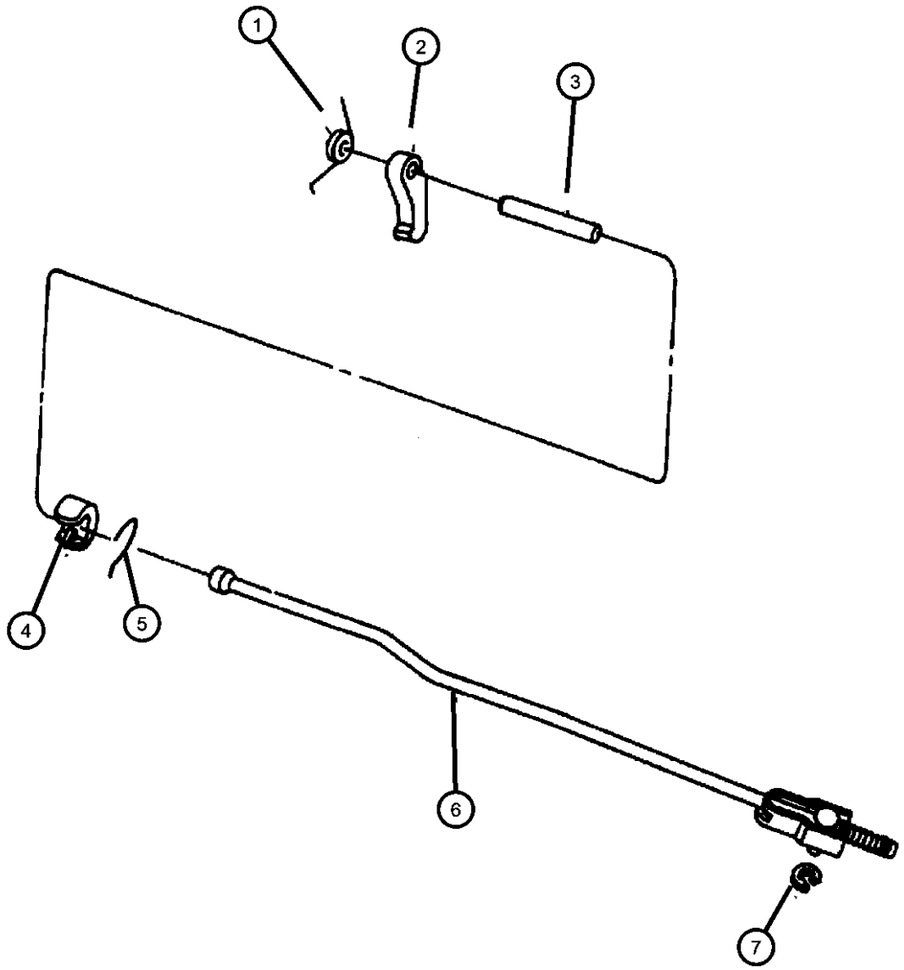

ITEM	PART NUMBER	QTY	LINE	SERIES	BODY	ENGINE	TRANS	TRIM	DESCRIPTION
NOTE:									
Sales Codes:									
[DGK]=42 RE 4 Speed Automatic Transmission									
1									SPRING, Parking Sprag
	02466909	1	1				DGK		
		1	5				DGK		
2									SPRAG, Transmission Parking
	04471415	1	1				DGK		
	04471415AB	1	5				DGK		
3									SHAFT, Parking Sprag
	02466892	1	1				DGK		
		1	5				DGK		
4									PLUG, Parking Sprag
	02538042	1	1				DGK		
		1	5				DGK		
5									SNAP RING, Transmission
	02538034	1	1				DGK		
		1	5				DGK		
6									ROD, Parking Sprag
	04431748	1	1				DGK		
		1	5				DGK		
7									SNAP RING, Rod
	06035256	1	1				DGK		
		1	5				DGK		

DAKOTA (AN)

SERIES	LINE	BODY	ENGINE	TRANSMISSION
L = Dakota (All)	1 = Dakota 2WD	61 = Regular Cab (112 WB)	EPE = 2.5L 4 Cylinder	DGK = 4 Speed Automatic 42RE
	5 = Dakota 4WD	31 = Club Cab (131 WB)	EHC = 3.9L 6 Cylinder	DGT = 4 Speed Automatic 46RE
		84 = Quad Cab (131 WB)	EML = 5.0L 8 Cylinder	DDC = 5 Speed HD Manual
			EVA = 4.7L Magnum V8	DDK = 5 Speed HD Manual
			EP0 = All 2.5L	DG4 = Multispeed Automatic 45RFE
			EH0 = All 3.9L	DG0 = All Automatic Transmissions
			EM0 = All 5.9L	DBB = All Manual Transmissions
			EV0 = All 4.7L	

Overdrive Clutch [DGK]
Figure 42RE-1010

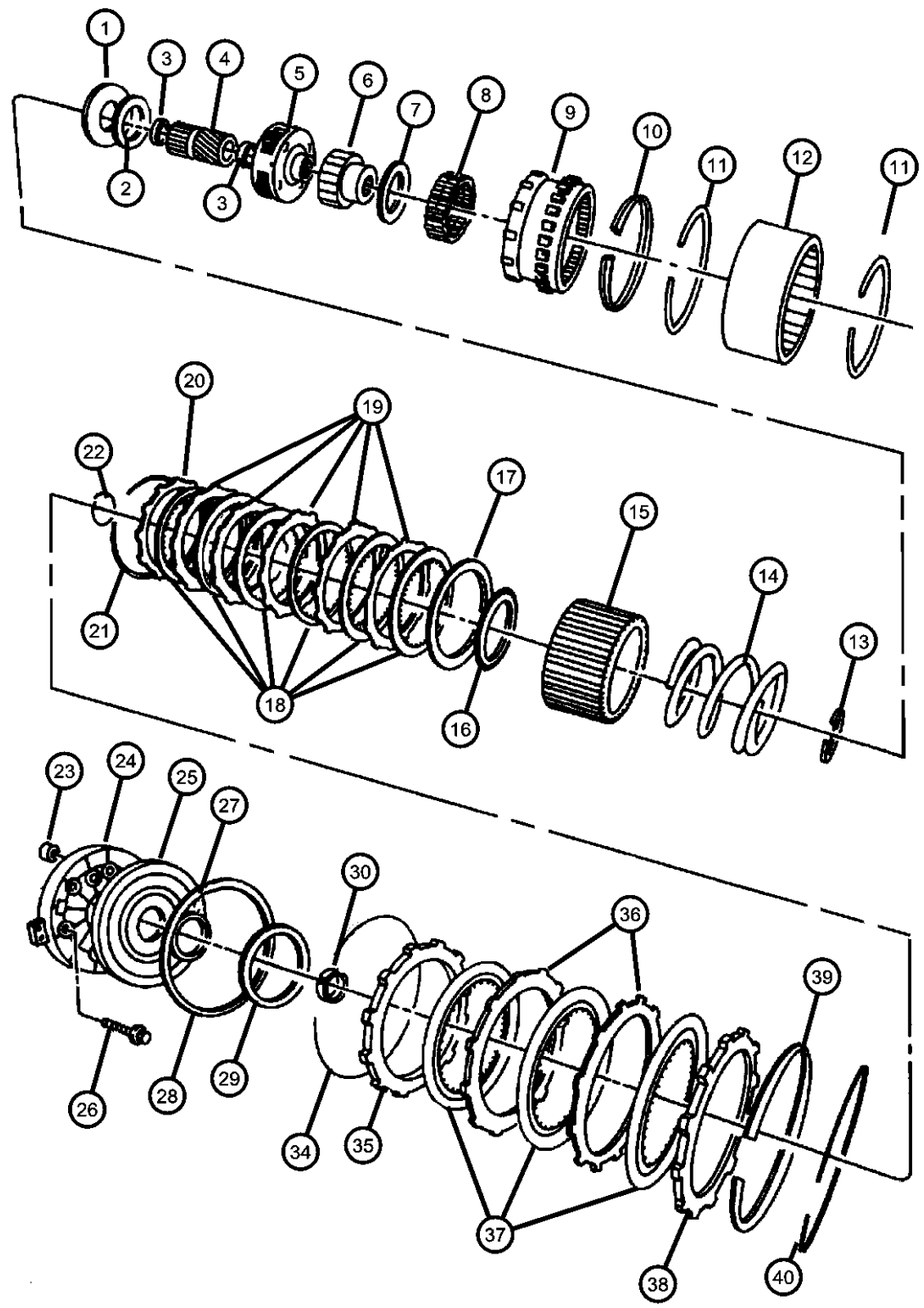

ITEM	PART NUMBER	QTY	LINE	SERIES	BODY	ENGINE	TRANS	TRIM	DESCRIPTION
NOTE:									
Sales Codes:									
[DGK]=42RE 4 Speed Automatic Transmission									
1	04740774	1	5				DGK		PLATE PACKAGE, Transmission Module
2	04338321	1	1				DGK		BEARING
3	04338321	1							BUSHING, (NOT SERVICED)
4									GEAR, Overdrive Sun
	05015107AA	1	1				DGK		
		1	5				DGK		
5									CARRIER, O/Drive Planet Pinion
	04798520	1	1				DGK		
		1	5				DGK		
6	04461124	1	1				DGK		RACE, Overrunning Clutch
7									THRUST BEARING, Ovedrive Third Position
	04461014	1	1				DGK		
		1	5				DGK		
8									CLUTCH, Overdrive Overrunning
	04461015	1	1				DGK		
		1	5				DGK		
9									GEAR, Overdrive Annulus
	04761010	1	1				DGK		
		1	5				DGK		
10									SNAP RING, 5.25 OD
	04461059	1	1				DGK		
		1	5				DGK		
11									SNAP RING, 6.00 OD
	04461060	2	1				DGK		
		2	5				DGK		
12									DRUM, Automatic Transmission
	04461040	1	1				DGK		
		1	5				DGK		
13									SNAP RING, 2.1875 OD

DAKOTA (AN)

SERIES	LINE	BODY	ENGINE	TRANSMISSION
L = Dakota (All)	1 = Dakota 2WD	61 = Regular Cab (112 WB)	EPE = 2.5L 4 Cylinder	DGK = 4 Speed Automatic 42RE
	5 = Dakota 4WD	31 = Club Cab (131 WB)	EHC = 3.9L 6 Cylinder	DGT = 4 Speed Automatic 46RE
		84 = Quad Cab (131 WB)	EML = 5.0L 8 Cylinder	DDC = 5 Speed HD Manual
			EVA = 4.7L Magnum V8	DDK = 5 Speed HD Manual
			EP0 = All 2.5L	DG4 = Multispeed Automatic 45RFE
			EH0 = All 3.9L	DG0 = All Automatic Transmissions
			EM0 = All 5.9L	DBB = All Manual Transmissions
			EV0 = All 4.7L	

Overdrive Clutch [DGK]
Figure 42RE-1010

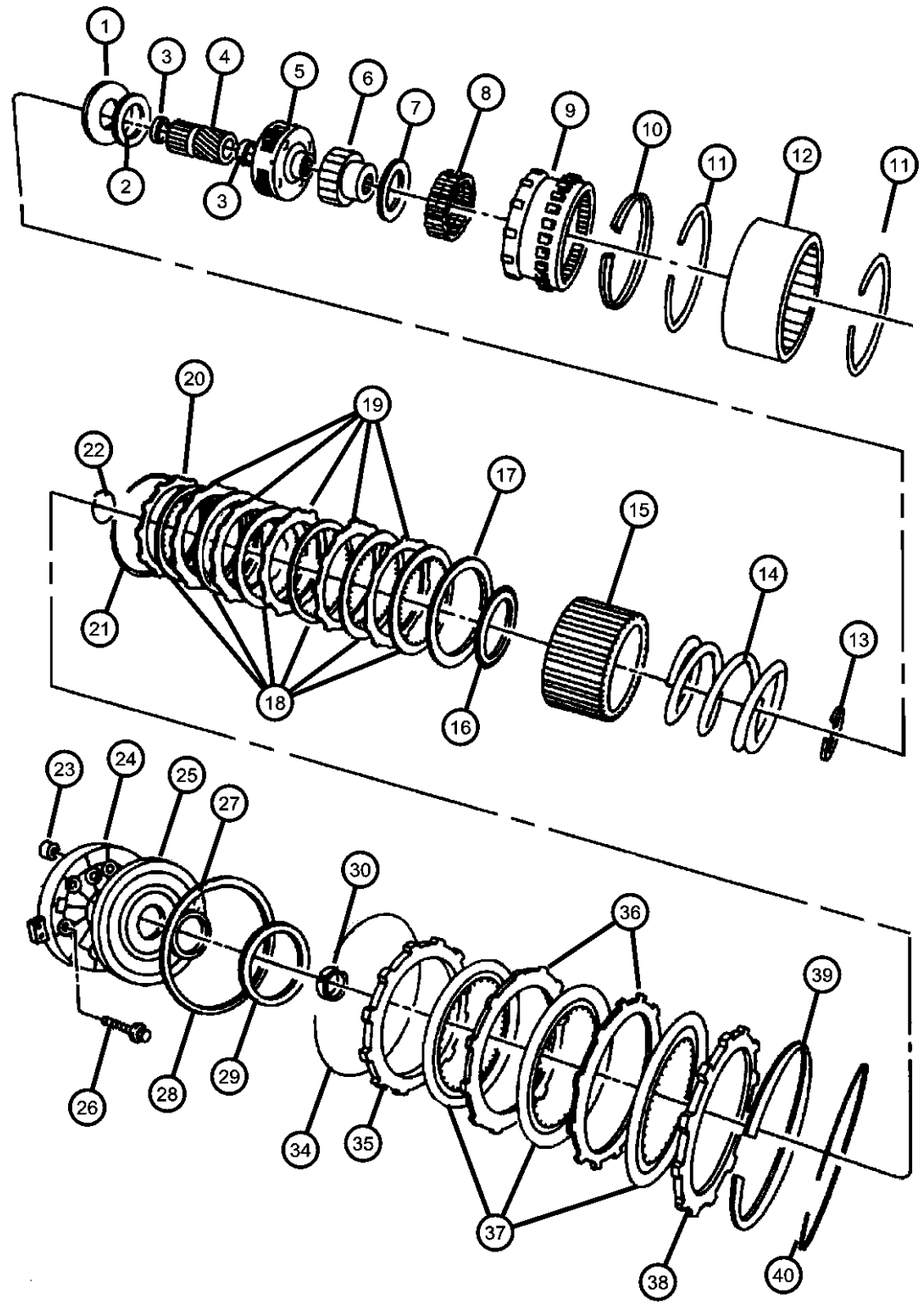

ITEM	PART NUMBER	QTY	LINE	SERIES	BODY	ENGINE	TRANS	TRIM	DESCRIPTION
	04461063	1	1				DGK		
		1	5				DGK		
14									SPRING, Direct Clutch
	04461027	1	1				DGK		
		1	5				DGK		
15									HUB, Direct Clutch
	04461072	1	1				DGK		
		1	5				DGK		
16									THRUST BEARING, Overdrive
	04446724	1	1				DGK		
		1	5				DGK		
17									PLATE, Transmission Clutch Reaction
	04461030	1	1				DGK		
		1	5				DGK		
18									DISC, Direct Clutch
	04461042	6	1				DGK		
		6	5				DGK		
19									PLATE, Transmission Clutch Reaction
	04461054	5	1				DGK		
		5	5				DGK		
20									PLATE, Transmission Clutch Reaction
	04461031	1	1				DGK		
		1	5				DGK		
21									SPRING, Direct Clutch
	04461032	1	1				DGK		
		1	5				DGK		
22									SNAP RING, 1.875" OD
	04461064	1	1				DGK		
		1	5				DGK		
23									FILTER, Overdrive Clutch
	04412583	1	1				DGK		

DAKOTA (AN)

SERIES	LINE	BODY	ENGINE	TRANSMISSION
L = Dakota (All)	1 = Dakota 2WD	61 = Regular Cab (112 WB)	EPE = 2.5L 4 Cylinder	DGK = 4 Speed Automatic 42RE
	5 = Dakota 4WD	31 = Club Cab (131 WB)	EHC = 3.9L 6 Cylinder	DGT = 4 Speed Automatic 46RE
		84 = Quad Cab (131 WB)	EML = 5.0L 8 Cylinder	DDC = 5 Speed HD Manual
			EVA = 4.7L Magnum V8	DDK = 5 Speed HD Manual
			EP0 = All 2.5L	DG4 = Multispeed Automatic 45RFE
			EH0 = All 3.9L	DG0 = All Automatic Transmissions
			EM0 = All 5.9L	DBB = All Manual Transmissions
			EV0 = All 4.7L	

Overdrive Clutch [DGK]
Figure 42RE-1010

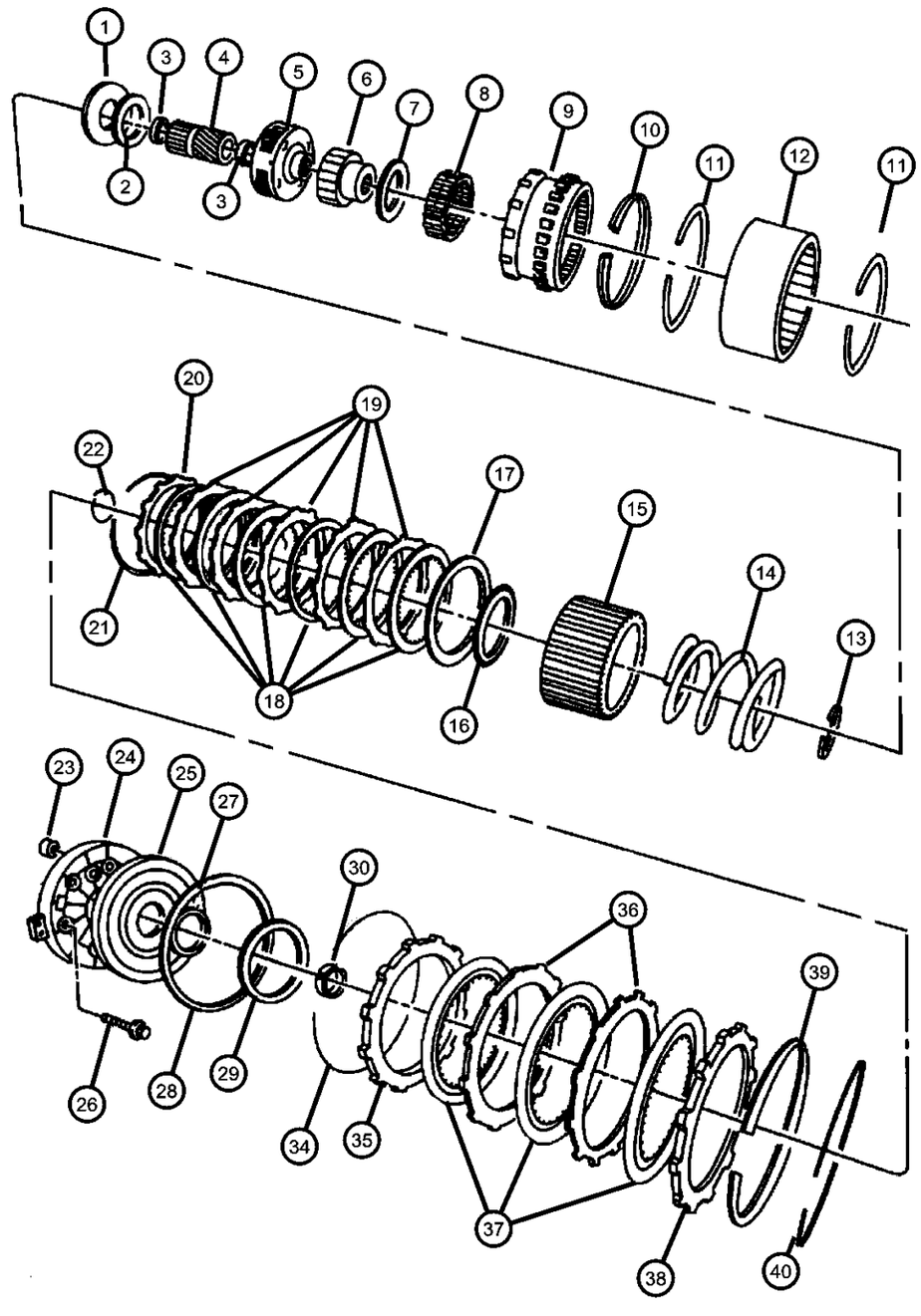

ITEM	PART NUMBER	QTY	LINE	SERIES	BODY	ENGINE	TRANS	TRIM	DESCRIPTION
		1	5				DGK		
24									RETAINER, Transmission Overdrive Clutch Piston
	04617246	1	1				DGK		
		1	5				DGK		
25									PISTON, Overdrive Clutch
	52118599	1	1				DGK		
		1	5				DGK		
26									BOLT, Hex Head, .25-28x1-5/8
	06033479	6	1				DGK		
		6	5				DGK		
27									SEAL, Overdrive Clutch Piston
	04431696	1	1				DGK		Outer
		1	5				DGK		Outer
28									SEAL, Overdrive Clutch Piston
	04431697	1	1				DGK		Inner
		1	5				DGK		Inner
29									PLATE, Transmission O/Drive Clutch
	04431585	1	1				DGK		[123/.125] Thick
		1	5				DGK		[123/.125] Thick
	04431586	1	1				DGK		[.153/.155] Thick
		1	5				DGK		[.153/.155] Thick
	04431587	1	1				DGK		[.183/.185] Thick
		1	5				DGK		[.183/.185] Thick
	04431588	1	1				DGK		[.213/.215] Thick
		1	5				DGK		[.213/.215] Thick
	04431590	1	1				DGK		[.243/.245] Thick
		1	5				DGK		[.243/.245] Thick
	04431731	1	1				DGK		[.138/.140] Thick
		1	5				DGK		[.138/.140] Thick
	04431732	1	1				DGK		[.168/.170] Thick
		1	5				DGK		[.168/.170] Thick

DAKOTA (AN)

SERIES	LINE	BODY	ENGINE	TRANSMISSION
L = Dakota (All)	1 = Dakota 2WD	61 = Regular Cab (112 WB)	EPE = 2.5L 4 Cylinder	DGK = 4 Speed Automatic 42RE
	5 = Dakota 4WD	31 = Club Cab (131 WB)	EHC = 3.9L 6 Cylinder	DGT = 4 Speed Automatic 46RE
		84 = Quad Cab (131 WB)	EML = 5.0L 8 Cylinder	DDC = 5 Speed HD Manual
			EVA = 4.7L Magnum V8	DDK = 5 Speed HD Manual
			EP0 = All 2.5L	DG4 = Multispeed Automatic 45RFE
			EH0 = All 3.9L	DG0 = All Automatic Transmissions
			EM0 = All 5.9L	DBB = All Manual Transmissions
			EV0 = All 4.7L	

Overdrive Clutch [DGK]
Figure 42RE-1010

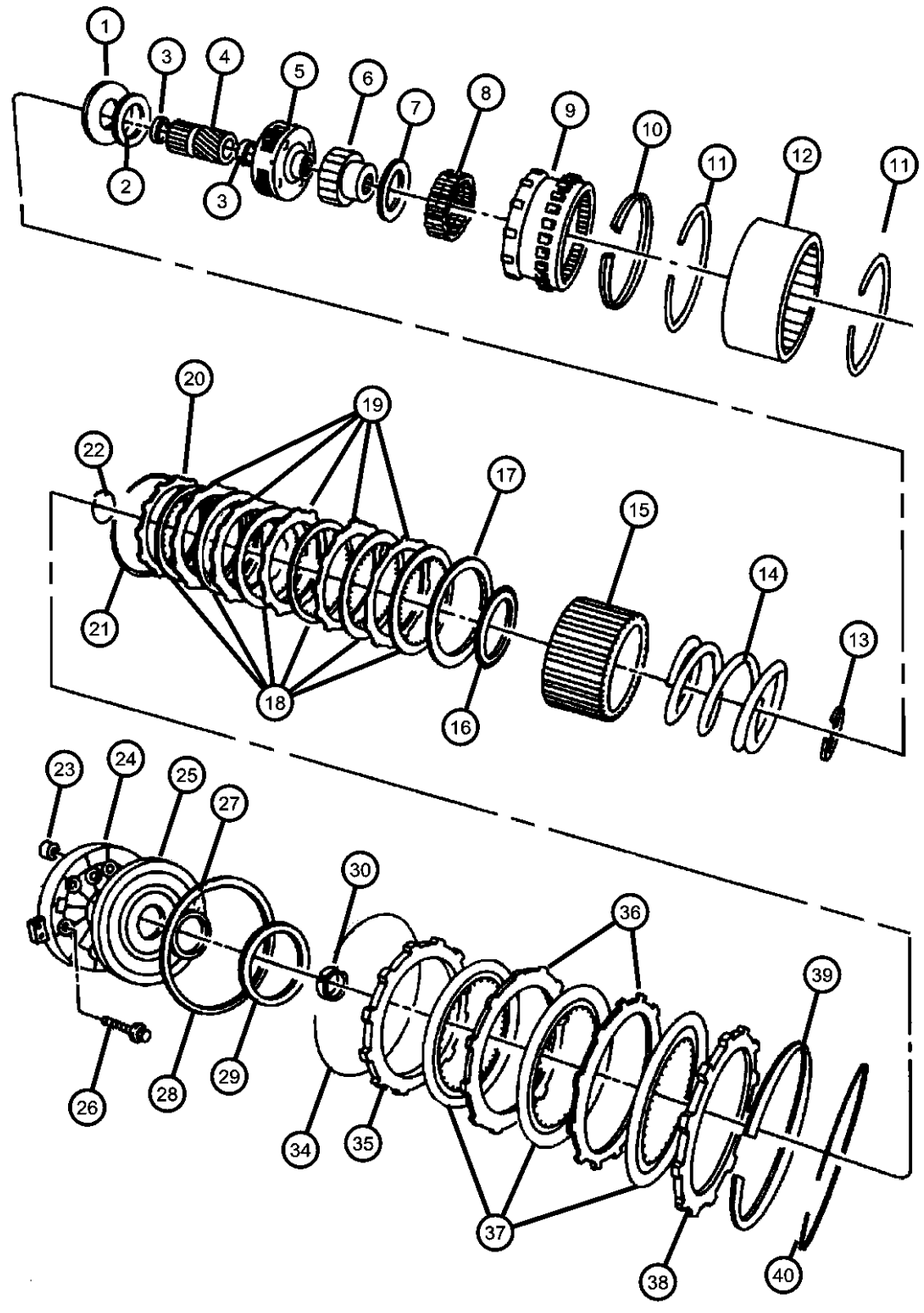

ITEM	PART NUMBER	QTY	LINE	SERIES	BODY	ENGINE	TRANS	TRIM	DESCRIPTION
	04431733	1	1				DGK		[.198/.200] Thick
		1	5				DGK		[.198/.200] Thick
	04431734	1	1				DGK		[.228/.230] Thick
		1	5				DGK		[.228/.230] Thick
	04431735	1	1				DGK		[.258/.260] Thick
		1	5				DGK		[.258/.260] Thick
30									SPACER, Intermediate Shaft, 1.58mm
	04431916	1	1				DGK		
		1	5				DGK		
-31									SPACER, Intermediate Shaft, .175
	04431917	1	1				DGK		
		1	5				DGK		
-32									SPACER, Intermediate Shaft, .193
	04431918	1	1				DGK		
		1	5				DGK		
-33									SPACER, Intermediate Shaft, .211
	04431919	1	1				DGK		
		1	5				DGK		
34									SNAP RING, Overdrive Clutch
	04461082	1	1				DGK		
		1	5				DGK		
35									PLATE, Transmission Clutch Reaction
	04461048	1	1				DGK		
		1	5				DGK		
36									PLATE, Transmission Clutch Reaction
	04461047	1	1				DGK		
		2	5				DGK		
37									DISC, Direct Clutch
	04461181	1	1				DGK		
		1	5				DGK		

DAKOTA (AN)

SERIES	LINE	BODY	ENGINE	TRANSMISSION
L = Dakota (All)	1 = Dakota 2WD	61 = Regular Cab (112 WB)	EPE = 2.5L 4 Cylinder	DGK = 4 Speed Automatic 42RE
	5 = Dakota 4WD	31 = Club Cab (131 WB)	EHC = 3.9L 6 Cylinder	DGT = 4 Speed Automatic 46RE
		84 = Quad Cab (131 WB)	EML = 5.0L 8 Cylinder	DDC = 5 Speed HD Manual
			EVA = 4.7L Magnum V8	DDK = 5 Speed HD Manual
			EP0 = All 2.5L	DG4 = Multispeed Automatic 45RFE
			EH0 = All 3.9L	DG0 = All Automatic Transmissions
			EM0 = All 5.9L	DBB = All Manual Transmissions
			EV0 = All 4.7L	

AR = use ase required - = Non illustrrated part

Overdrive Clutch [DGK]
Figure 42RE-1010

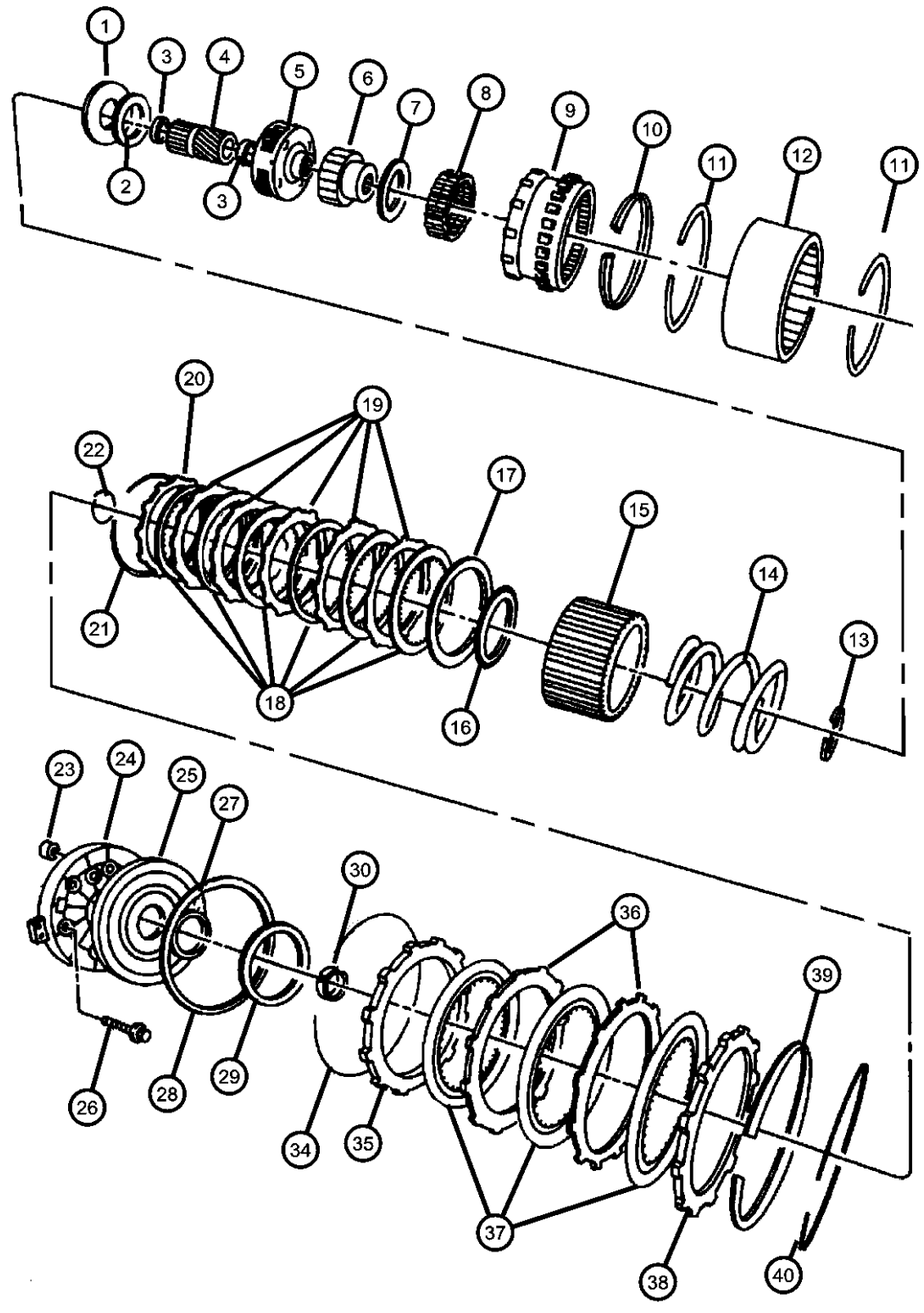

ITEM	PART NUMBER	QTY	LINE	SERIES	BODY	ENGINE	TRANS	TRIM	DESCRIPTION
38									PLATE, Transmission Clutch Reaction
	04461033	1	1				DGK		
		1	5				DGK		
39									SPRING, Overdrive Clutch
	04461066	1	1				DGK		
		1	5				DGK		
40									SNAP RING, 6.50 OD
	04461065	1	1				DGK		
		1	5				DGK		

DAKOTA (AN)

SERIES	LINE	BODY	ENGINE	TRANSMISSION
L = Dakota (All)	1 = Dakota 2WD	61 = Regular Cab (112 WB)	EPE = 2.5L 4 Cylinder	DGK = 4 Speed Automatic 42RE
	5 = Dakota 4WD	31 = Club Cab (131 WB)	EHC = 3.9L 6 Cylinder	DGT = 4 Speed Automatic 46RE
		84 = Quad Cab (131 WB)	EML = 5.0L 8 Cylinder	DDC = 5 Speed HD Manual
			EVA = 4.7L Magnum V8	DDK = 5 Speed HD Manual
			EP0 = All 2.5L	DG4 = Multispeed Automatic 45RFE
			EH0 = All 3.9L	DG0 = All Automatic Transmissions
			EM0 = All 5.9L	DBB = All Manual Transmissions
			EV0 = All 4.7L	

Controls, Gearshift [DGK]
Figure 42RE-1210

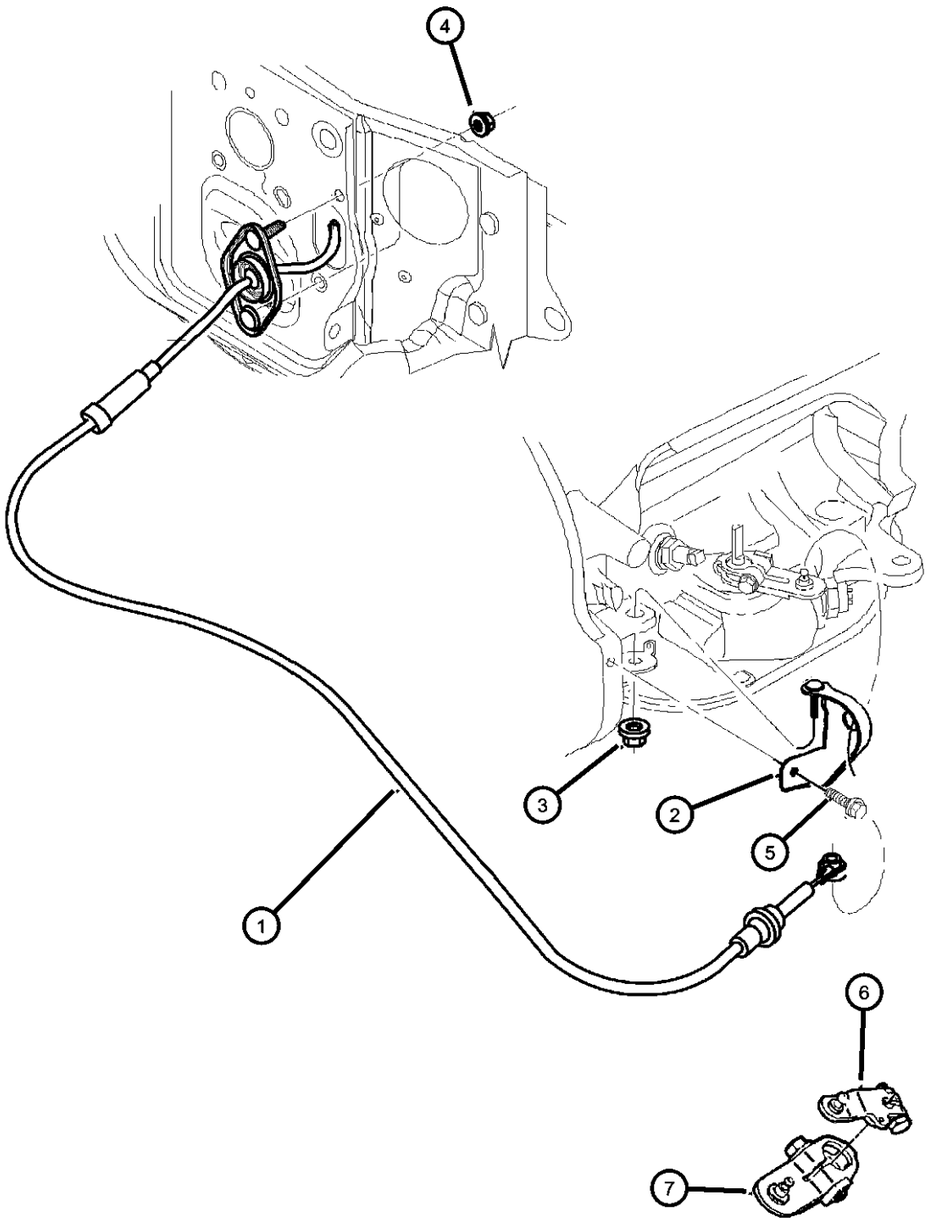

ITEM	PART NUMBER	QTY	LINE	SERIES	BODY	ENGINE	TRANS	TRIM	DESCRIPTION

NOTE:
Sales Codes:
[DGK]=42 RE 4 Speed Automatic Transmission
[DGT]=46RE 4 Speed Automatic Transmission
[DG0]=All Automatic Transmissions

1	52110004AE	1					DGK, DGT		CABLE, Shift
2	52107705AC	1					DGK		BRACKET, Shift Cable
3	06502697	1					DGK, DGT		NUT, Hex Flange Lock, M12x1.75
4	06503269	2					DG0		NUT, Hex, M10-1.5
5	06503269	2							SCREW, [.312-18x.750], (NOT SERVICED)
6	03681227	1	1				DGK		LEVER, Throttle Valve
7	52107678AB	1					DGK, DGT		LEVER, Manual Control

DAKOTA (AN)

SERIES	LINE	BODY	ENGINE	TRANSMISSION
L = Dakota (All)	1 = Dakota 2WD	61 = Regular Cab (112 WB)	EPE = 2.5L 4 Cylinder	DGK = 4 Speed Automatic 42RE
	5 = Dakota 4WD	31 = Club Cab (131 WB)	EHC = 3.9L 6 Cylinder	DGT = 4 Speed Automatic 46RE
		84 = Quad Cab (131 WB)	EML = 5.0L 8 Cylinder	DDC = 5 Speed HD Manual
			EVA = 4.7L Magnum V8	DDK = 5 Speed HD Manual
			EP0 = All 2.5L	DG4 = Multispeed Automatic 45RFE
			EH0 = All 3.9L	DG0 = All Automatic Transmissions
			EM0 = All 5.9L	DBB = All Manual Transmissions
			EV0 = All 4.7L	

Group - 45RFE

Automatic Transmission Multi-Speed

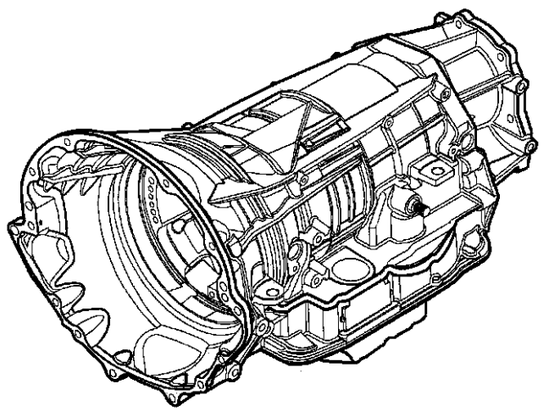

45RFE-100 Transmission Assembly 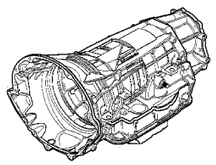	**45RFE-1200** Gearshift Controls 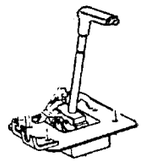	**45RFE-1300** Seal and Shim Packages 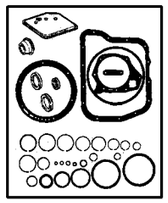	**45RFE-200** Case and Extension 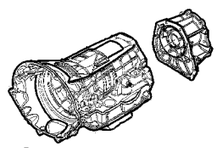
45RFE-300 Oil Pump 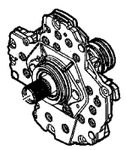	**45RFE-400** Gear Train 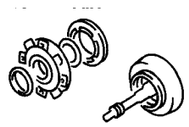	**45RFE-700** Valve Body 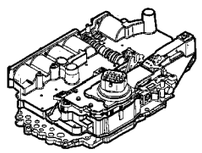	

Group - 45RFE Automatic Transmission Multi-Speed

Illustration Title — Group-Fig. No.

Transmission Assembly
Transmission [45RFE] [DG4] ..... Fig. 45RFE - 110

Case and Extension
Case & Related Parts [45RFE] [DG4] ..... Fig. 45RFE - 210
Adapter [45RFE] [DG4] ..... Fig. 45RFE - 220

Oil Pump
Oil Pump [45RFE] [DG4] ..... Fig. 45RFE - 310

Gear Train
Input Clutch [45RFE] [DG4] ..... Fig. 45RFE - 410
Underdrive [45RFE] [DG4] ..... Fig. 45RFE - 420
Overdrive [45RFE] [DG4] ..... Fig. 45RFE - 430
2/4 Clutch Retainer [45RFE] [DG4] ..... Fig. 45RFE - 440
Input / Reverse Planetary [45RFE] [DG4] ..... Fig. 45RFE - 450
Reaction Annulus / Sun Gear [45RFE] [DG4] ..... Fig. 45RFE - 460
Low / Reverse Clutch ..... Fig. 45RFE - 470

Valve Body
Valve Body [45RFE] [DG4] ..... Fig. 45RFE - 710
Parking Sprag [45RFE] [DG4] ..... Fig. 45RFE - 720

Gearshift Controls
Gearshift Controls [45RFE] [DG4] ..... Fig. 45RFE - 1210

Seal and Shim Packages
LR Clutch [45RFE] [DG4] ..... Fig. 45RFE - 1310
Input Clutch Plate [45RFE] [DG4] ..... Fig. 45RFE - 1320
OVERHAUL [45RFE] [DG4] ..... Fig. 45RFE - 1330
Input Clutch [45RFE] [DG4] ..... Fig. 45RFE - 1340
Planetary Plate [45RFE] [DG4] ..... Fig. 45RFE - 1350
2 & 4 Clutch [45RFE] [DG4] ..... Fig. 45RFE - 1360

Transmission [45RFE] [DG4]
Figure 45RFE-110

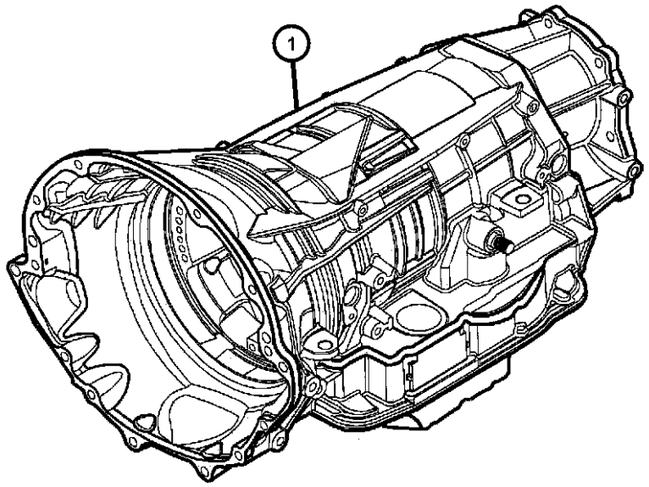

ITEM	PART NUMBER	QTY	LINE	SERIES	BODY	ENGINE	TRANS	TRIM	DESCRIPTION
NOTES:									
[DG4]= Multi- Speed Automatic Transmission[45RFE]									
1									TRANSMISSION KIT, Automatic
	05018169AB	1	5				DG4		
	05013457AA								Mopar Automatic Transmission Fluid Quart
	05013458AA								Mopar Automatic Transmission Fluid Gallon
	05018205AB	1	1				DG4		
	05013457AA								Mopar Automatic Transmission Fluid Quart
	05013458AA								Mopar Automatic Transmission Fluid Gallon

DAKOTA (AN)

SERIES	LINE	BODY	ENGINE	TRANSMISSION
L = Dakota (All)	1 = Dakota 2WD	61 = Regular Cab (112 WB)	EPE = 2.5L 4 Cylinder	DGK = 4 Speed Automatic 42RE
	5 = Dakota 4WD	31 = Club Cab (131 WB)	EHC = 3.9L 6 Cylinder	DGT = 4 Speed Automatic 46RE
		84 = Quad Cab (131 WB)	EML = 5.0L 8 Cylinder	DDC = 5 Speed HD Manual
			EVA = 4.7L Magnum V8	DDK = 5 Speed HD Manual
			EP0 = All 2.5L	DG4 = Multispeed Automatic 45RFE
			EH0 = All 3.9L	DG0 = All Automatic Transmissions
			EM0 = All 5.9L	DBB = All Manual Transmissions
			EV0 = All 4.7L	

Case & Related Parts [45RFE] [DG4]
Figure 45RFE-210

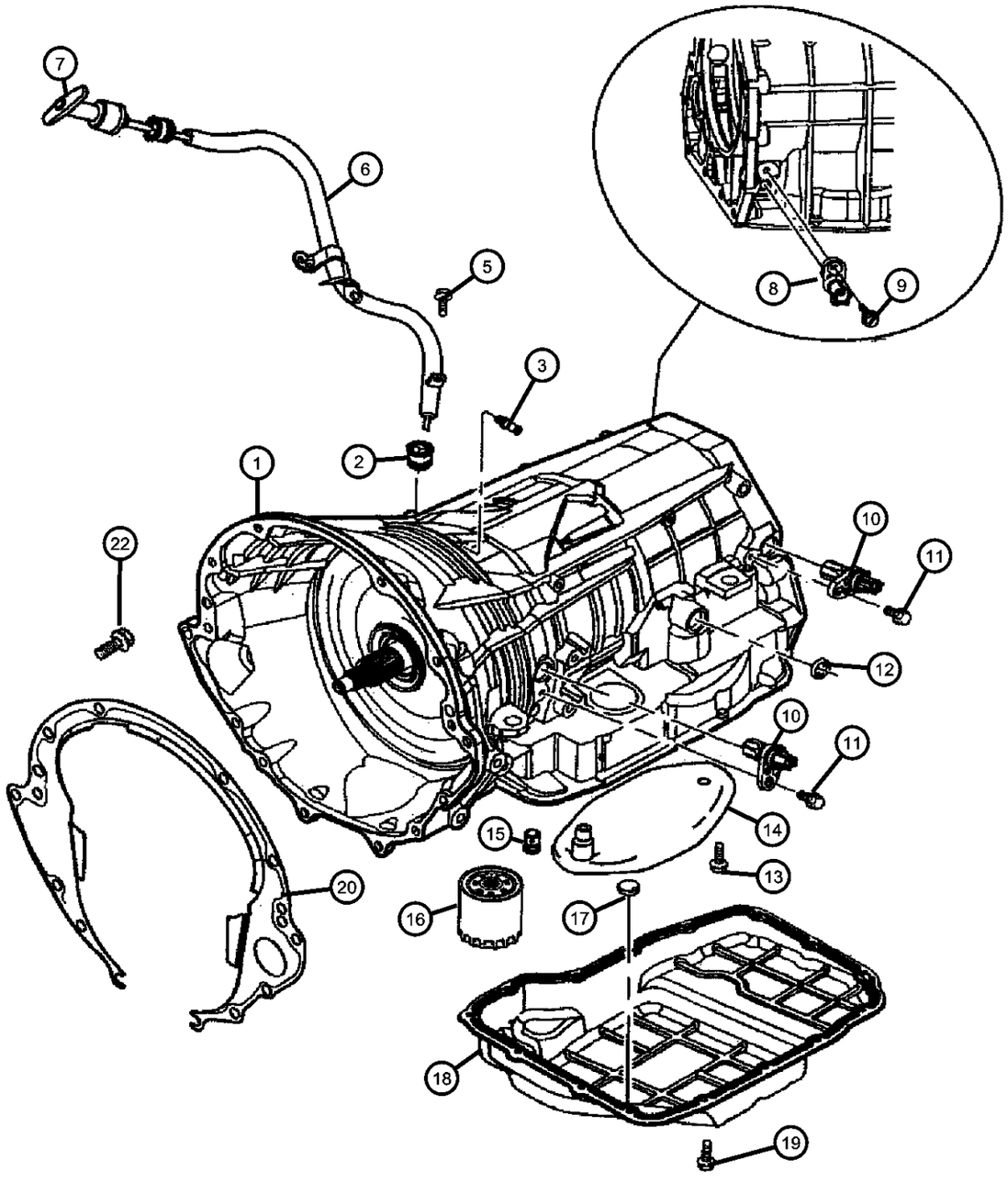

ITEM	PART NUMBER	QTY	LINE	SERIES	BODY	ENGINE	TRANS	TRIM	DESCRIPTION
NOTES:									
[DG0]= All Automatic Transmissions									
[DG4]= Multi- Speed Automatic Transmission[45RFE]									
1									CASE, Transmission
	04799613	1	5				DG4		
		1	1				DG4		
2									GROMMET
	04810021	1	5				DG4		
		1	1				DG4		
3									VENT, Transmission
	04799861AB	1	5				DG4		
		1	1				DG4		
-4	53032457AA	1					DG4		TUBE, Vent
5	06501979	1					DG4		SCREW AND WASHER, Hex Head, M6x1x17
6	53032517AA	1					DG4		TUBE, Transmission Oil Filler
7	53032518AA	1					DG4		INDICATOR, Transmission Fluid Level
8									TRANSDUCER, Pressure Sensor
	04799758AC	1	5				DG4		
		1	1				DG4		
9									SCREW
	06101221	1	5				DG4		
		1	1				DG4		
10									SENSOR, Transmission Output Speed
	04799061	2	5				DG4		
		2	1				DG4		
11									BOLT, M6x1.00x20
	06101331	1	5				DG4		
		2	1				DG4		
12									SEAL
	04799346	1	5				DG4		
		1	1				DG4		
13									SCREW, Pan Head, M5 x 0.8 x 12.60

DAKOTA (AN)

SERIES	LINE	BODY	ENGINE	TRANSMISSION
L = Dakota (All)	1 = Dakota 2WD	61 = Regular Cab (112 WB)	EPE = 2.5L 4 Cylinder	DGK = 4 Speed Automatic 42RE
	5 = Dakota 4WD	31 = Club Cab (131 WB)	EHC = 3.9L 6 Cylinder	DGT = 4 Speed Automatic 46RE
		84 = Quad Cab (131 WB)	EML = 5.0L 8 Cylinder	DDC = 5 Speed HD Manual
			EVA = 4.7L Magnum V8	DDK = 5 Speed HD Manual
			EP0 = All 2.5L	DG4 = Multispeed Automatic 45RFE
			EH0 = All 3.9L	DG0 = All Automatic Transmissions
			EM0 = All 5.9L	DBB = All Manual Transmissions
			EV0 = All 4.7L	

Case & Related Parts [45RFE] [DG4]
Figure 45RFE-210

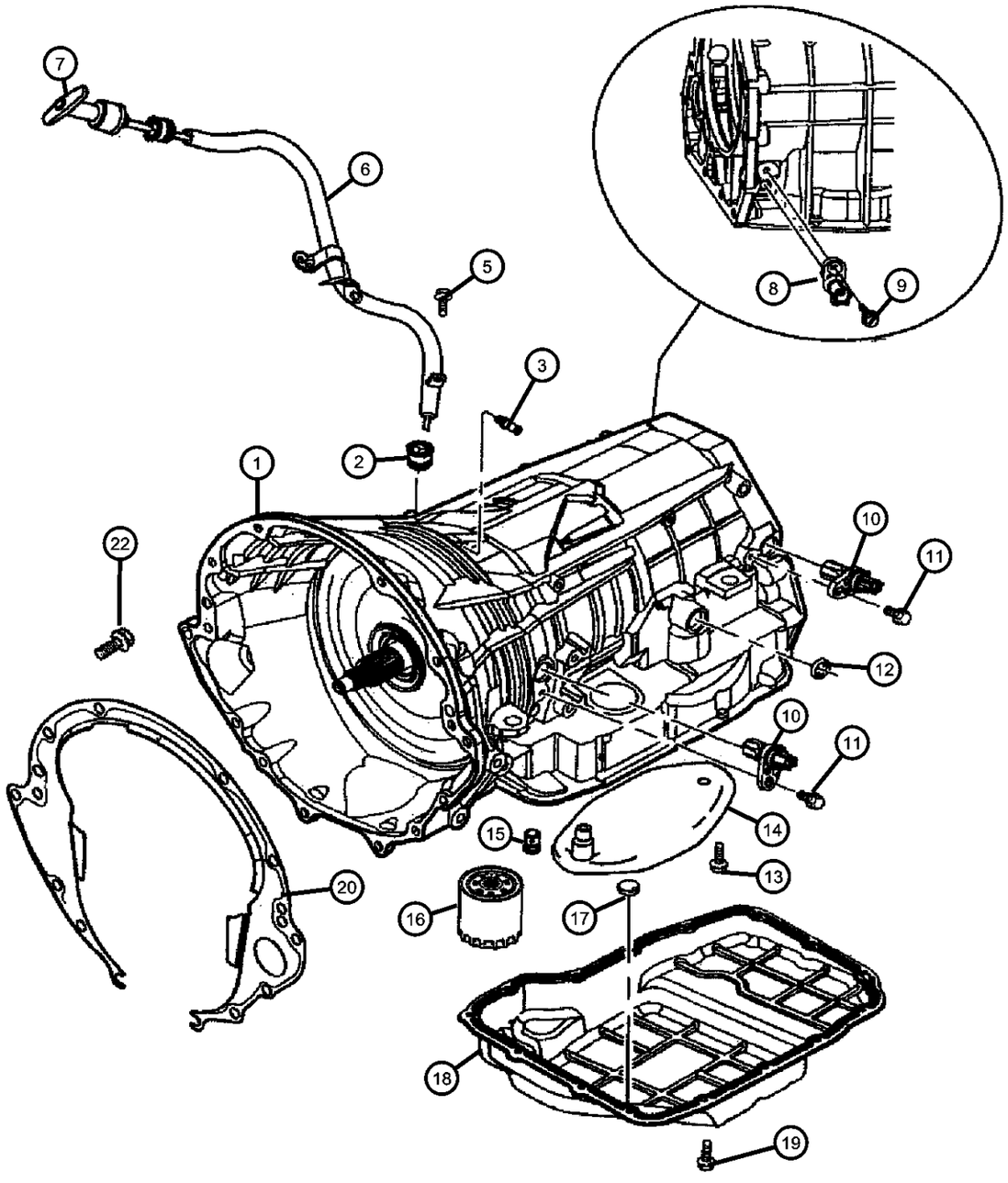

ITEM	PART NUMBER	QTY	LINE	SERIES	BODY	ENGINE	TRANS	TRIM	DESCRIPTION
	06503232	2	5				DG4		
		2	1				DG4		
14									FILTER PACKAGE, Transmission Oil
	05013470AC	1	5				DG4		
	05015267AC	1	1				DG4		
15									VALVE, Flow Control
	04799681	1	5				DG4		
		1	1				DG4		
16									FILTER, Transmission Oil
	04799662	1	5				DG4		
		1	1				DG4		
17									MAGNET, Transmission
	04446728	1	5				DG4		
		1	1				DG4		
18									PAN, Transmission Oil
	04800078AA	1	1				DG4		
	05013681AA	1	5				DG4		
19									SCREW
	06101221	15	5				DG4		
		15	1				DG4		
20	52107715AB	1					DG4		COVER, Converter
-21									NUT, Transmission Case
	04799433AB	2	5				DG4		
		2	1				DG4		
22	06022266	4					DG0		SCREW, Hex Head, .375-16x1.5, Case to Cylinder Block

DAKOTA (AN)

SERIES	LINE	BODY	ENGINE	TRANSMISSION
L = Dakota (All)	1 = Dakota 2WD	61 = Regular Cab (112 WB)	EPE = 2.5L 4 Cylinder	DGK = 4 Speed Automatic 42RE
	5 = Dakota 4WD	31 = Club Cab (131 WB)	EHC = 3.9L 6 Cylinder	DGT = 4 Speed Automatic 46RE
		84 = Quad Cab (131 WB)	EML = 5.0L 8 Cylinder	DDC = 5 Speed HD Manual
			EVA = 4.7L Magnum V8	DDK = 5 Speed HD Manual
			EP0 = All 2.5L	DG4 = Multispeed Automatic 45RFE
			EH0 = All 3.9L	DG0 = All Automatic Transmissions
			EM0 = All 5.9L	DBB = All Manual Transmissions
			EV0 = All 4.7L	

Adapter [45RFE] [DG4]
Figure 45RFE-220

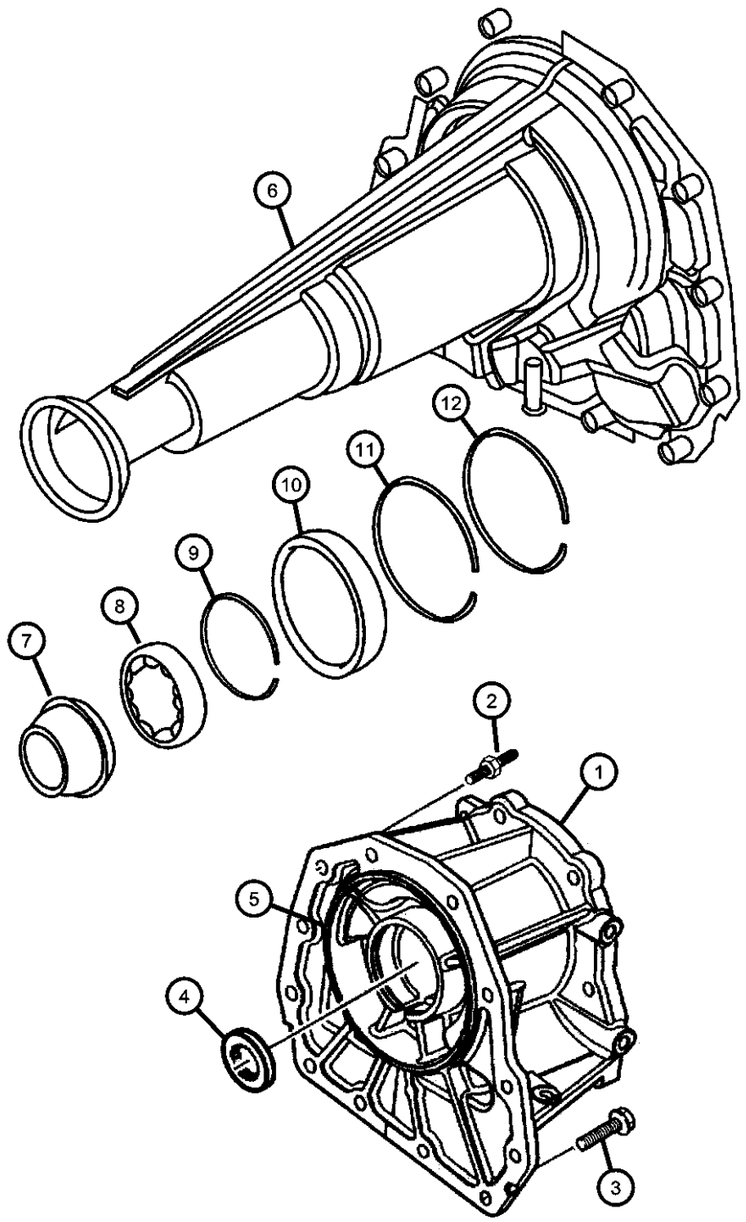

ITEM	PART NUMBER	QTY	LINE	SERIES	BODY	ENGINE	TRANS	TRIM	DESCRIPTION
1	52107719	1	5				DG4		ADAPTER, Transfer Case
2									STUD, M10x1.5x62
	06505064AA	2	5				DG4		
		2	1				DG4		
3									SCREW AND WASHER, Hex Head, M10x1.5x37
	06504774	10	5				DG4		
		10	1				DG4		
4	04167929	1	5				DG4		SEAL, Input Gear
5	04799090	1	5				DG4		SEAL, Input
6	04799495	1	1				DG4		HOUSING, Transmission Rear Extension
7	04531216AB	1	1				DG4		SEAL, Output Shaft
8	02466224	1	1				DG4		BEARING, Output Shaft
9	04461069	1	1				DG4		SNAP RING
10	05086303AA	1	1				DG4		BEARING, Input Gear
11	05086304AA	1	1				DG4		SNAP RING
12	05086314AA	1	1				DG4		SNAP RING

DAKOTA (AN)

SERIES	LINE	BODY	ENGINE	TRANSMISSION
L = Dakota (All)	1 = Dakota 2WD	61 = Regular Cab (112 WB)	EPE = 2.5L 4 Cylinder	DGK = 4 Speed Automatic 42RE
	5 = Dakota 4WD	31 = Club Cab (131 WB)	EHC = 3.9L 6 Cylinder	DGT = 4 Speed Automatic 46RE
		84 = Quad Cab (131 WB)	EML = 5.0L 8 Cylinder	DDC = 5 Speed HD Manual
			EVA = 4.7L Magnum V8	DDK = 5 Speed HD Manual
			EP0 = All 2.5L	DG4 = Multispeed Automatic 45RFE
			EH0 = All 3.9L	DG0 = All Automatic Transmissions
			EM0 = All 5.9L	DBB = All Manual Transmissions
			EV0 = All 4.7L	

Oil Pump [45RFE] [DG4]
Figure 45RFE-310

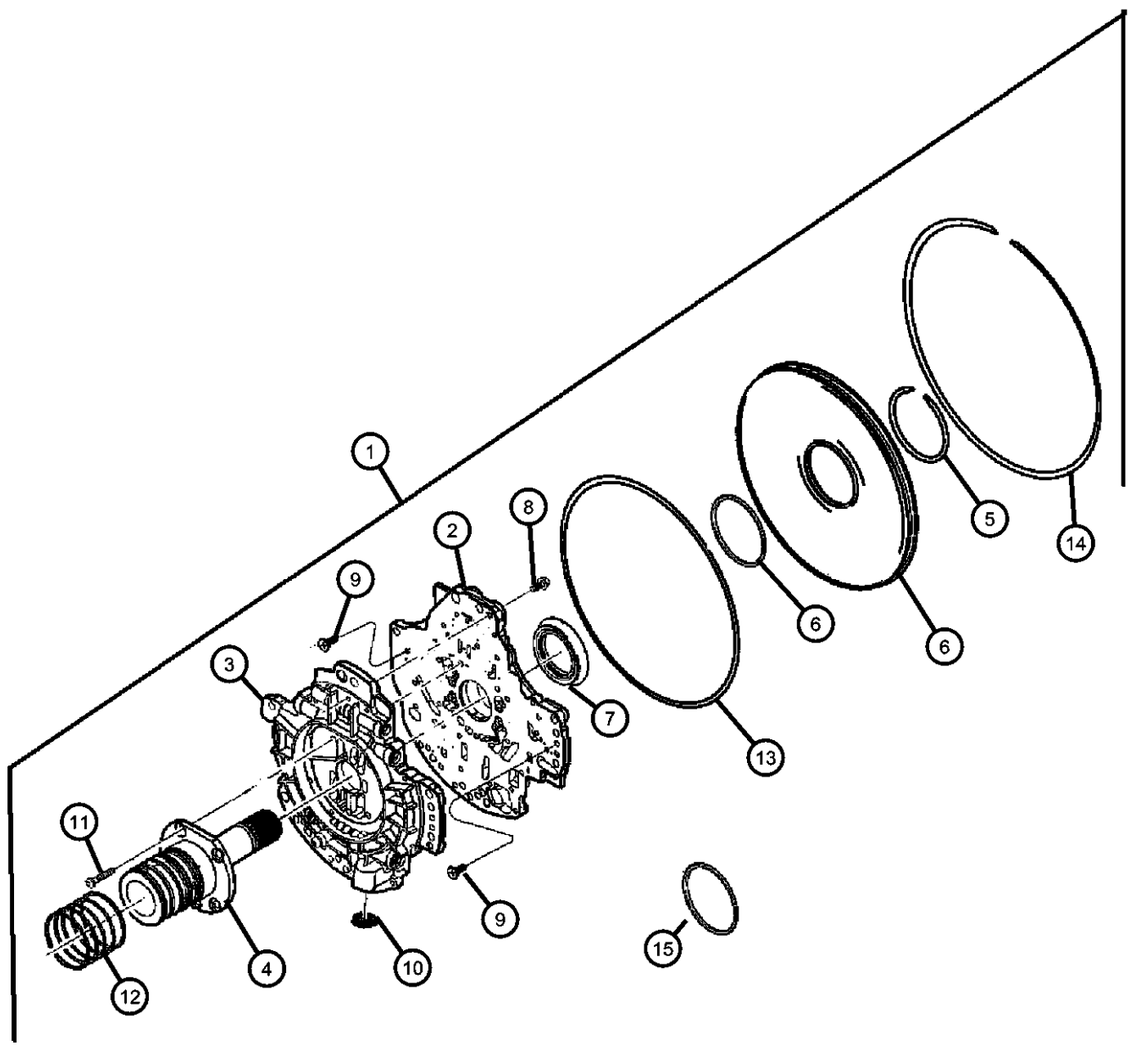

ITEM	PART NUMBER	QTY	LINE	SERIES	BODY	ENGINE	TRANS	TRIM	DESCRIPTION
1									PUMP PACKAGE, Transmission
	05072589AA	1	5				DG4		
		1	1				DG4		
2		1							HOUSING, Pump, (NOT SERVICED)
3		1							BODY, Oil Pump Valve, (NOT SERVICED)
4		1							SUPPORT, Reaction Shaft, (NOT SERVICED)
5									SNAP RING, Transmission
	04799082	1	5				DG4		
		1	1				DG4		
6									COVER, Oil Pump
	04799609	1	5				DG4		
		1	1				DG4		
7									SEAL, Transmission Oil Pump
	04617919	1	5				DG4		
		1	1				DG4		
8									SCREW AND WASHER, Pan Head, M5x.8x25
	06500215	24	5				DG4		
		24	1				DG4		
9									SCREW, Pan Head, M5 x 0.8 x 12.60
	06503232	1	5				DG4		
		1	1				DG4		
10									SEAL, Oil Pump
	04799964AB	1	5				DG4		
		1	1				DG4		
11									SCREW, Button Head
	06504661	5	5				DG4		
		5	1				DG4		
12									RING, Transmission
	04799056AB	5	1				DG4		
		1	5				DG4		
13									O RING, Oil Pump, .

DAKOTA (AN)

SERIES	LINE	BODY	ENGINE	TRANSMISSION
L = Dakota (All)	1 = Dakota 2WD	61 = Regular Cab (112 WB)	EPE = 2.5L 4 Cylinder	DGK = 4 Speed Automatic 42RE
	5 = Dakota 4WD	31 = Club Cab (131 WB)	EHC = 3.9L 6 Cylinder	DGT = 4 Speed Automatic 46RE
		84 = Quad Cab (131 WB)	EML = 5.0L 8 Cylinder	DDC = 5 Speed HD Manual
			EVA = 4.7L Magnum V8	DDK = 5 Speed HD Manual
			EP0 = All 2.5L	DG4 = Multispeed Automatic 45RFE
			EH0 = All 3.9L	DG0 = All Automatic Transmissions
			EM0 = All 5.9L	DBB = All Manual Transmissions
			EV0 = All 4.7L	

Oil Pump [45RFE] [DG4]
Figure 45RFE-310

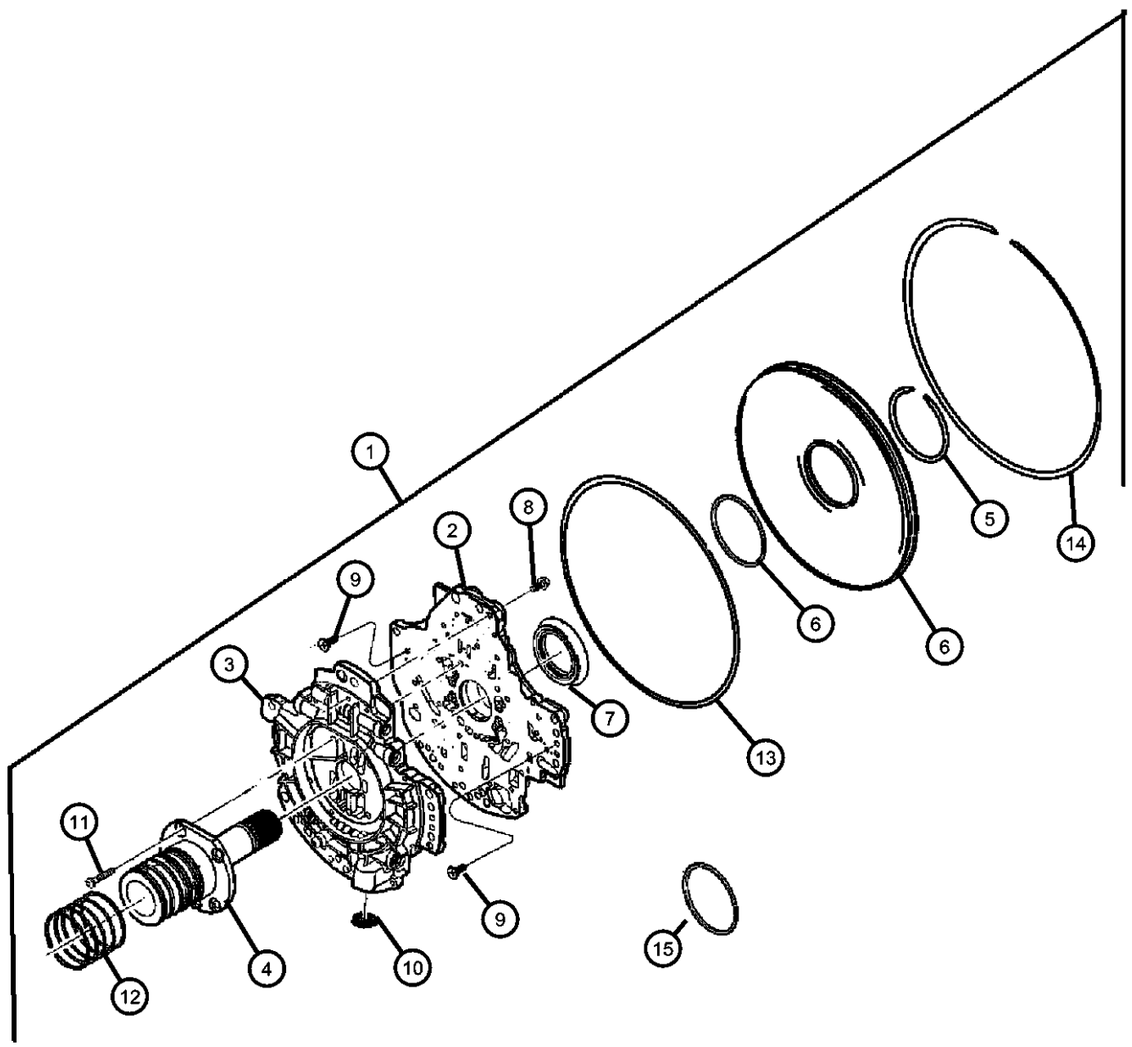

ITEM	PART NUMBER	QTY	LINE	SERIES	BODY	ENGINE	TRANS	TRIM	DESCRIPTION
	04799003	1	5				DG4		
		1	1				DG4		
14									SNAP RING, Transmission
	04799005	1	5				DG4		
		1	1				DG4		
15									SEAL, Torque Converter Hub
	04736547	1	5				DG4		
		1	1				DG4		

DAKOTA (AN)

SERIES	LINE	BODY	ENGINE	TRANSMISSION
L = Dakota (All)	1 = Dakota 2WD	61 = Regular Cab (112 WB)	EPE = 2.5L 4 Cylinder	DGK = 4 Speed Automatic 42RE
	5 = Dakota 4WD	31 = Club Cab (131 WB)	EHC = 3.9L 6 Cylinder	DGT = 4 Speed Automatic 46RE
		84 = Quad Cab (131 WB)	EML = 5.0L 8 Cylinder	DDC = 5 Speed HD Manual
			EVA = 4.7L Magnum V8	DDK = 5 Speed HD Manual
			EP0 = All 2.5L	DG4 = Multispeed Automatic 45RFE
			EH0 = All 3.9L	DG0 = All Automatic Transmissions
			EM0 = All 5.9L	DBB = All Manual Transmissions
			EV0 = All 4.7L	

AR = use ase required - = Non illustrrated part

Input Clutch [45RFE] [DG4]
Figure 45RFE-410

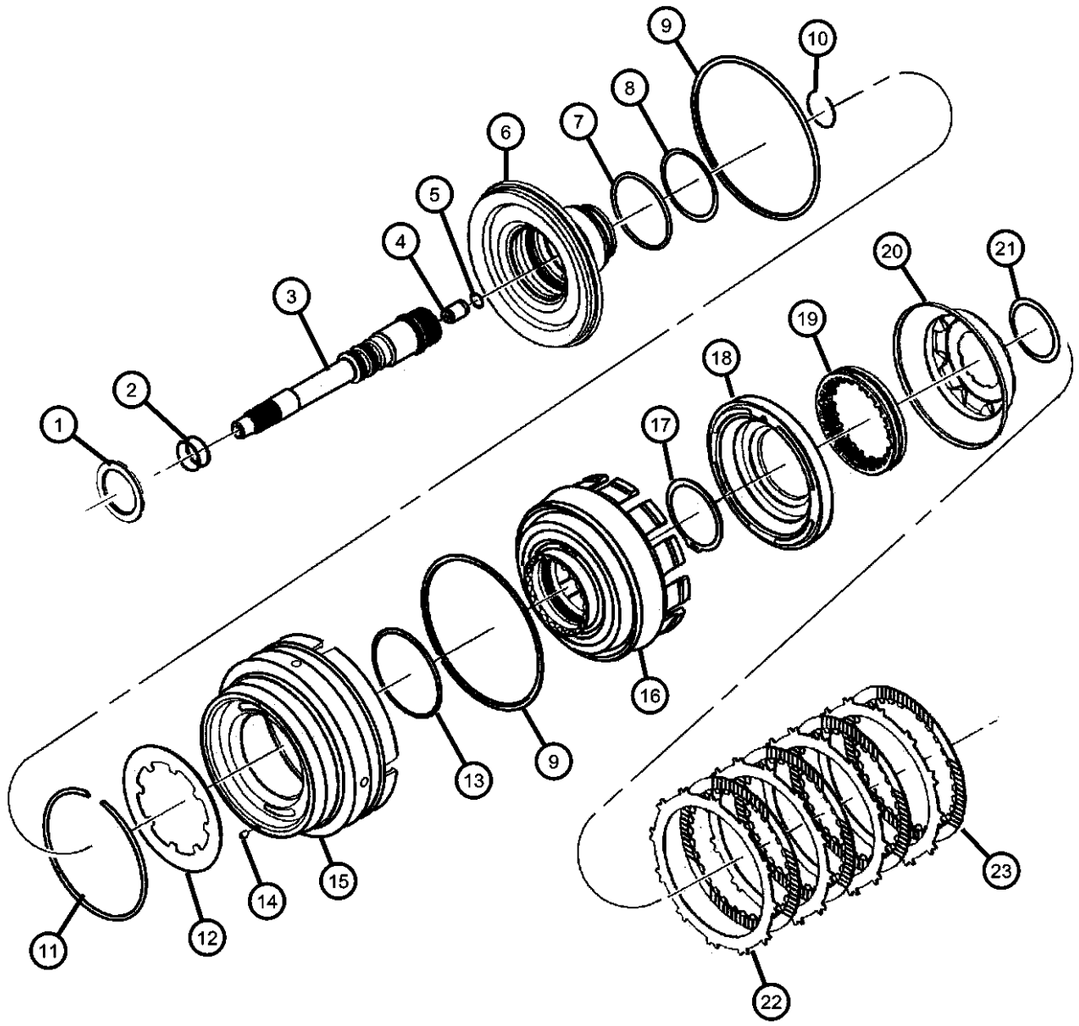

ITEM	PART NUMBER	QTY	LINE	SERIES	BODY	ENGINE	TRANS	TRIM	DESCRIPTION
NOTES:									
[DG4]= Multi- Speed Automatic Transmission[45RFE]									
1									THRUST BEARING, Needle Roller
	04799469	1	5				DG4		
		1	1				DG4		
2									SEAL, Input Shaft, PKG 05013090AA
	04799539	2	5				DG4		
		2	1				DG4		
3									SHAFT, Input
	04799537	1	5				DG4		
		1	1				DG4		
4									CHECK VALVE, Transmission
	04799974AA	1	5				DG4		
		1	1				DG4		
5									SNAP RING
	04799978AA	1	5				DG4		
		1	1				DG4		
6									HUB, Input Clutch
	04799536AD	1	5				DG4		
		1	1				DG4		
7									O RING, Transmission Clutch, PKG 05013090AA
	04799073	1	5				DG4		
		1	1				DG4		
8									O RING, Transmission Clutch, PKG 05013090AA
	04799755	1	5				DG4		
		1	1				DG4		
9									SEAL, Input
	04799090	1	1				DG4		
		1	5				DG4		
10									SNAP RING, Input Shaft
	04799538	1	5				DG4		
		1	1				DG4		

DAKOTA (AN)

SERIES	LINE	BODY	ENGINE	TRANSMISSION
L = Dakota (All)	1 = Dakota 2WD	61 = Regular Cab (112 WB)	EPE = 2.5L 4 Cylinder	DGK = 4 Speed Automatic 42RE
	5 = Dakota 4WD	31 = Club Cab (131 WB)	EHC = 3.9L 6 Cylinder	DGT = 4 Speed Automatic 46RE
		84 = Quad Cab (131 WB)	EML = 5.0L 8 Cylinder	DDC = 5 Speed HD Manual
			EVA = 4.7L Magnum V8	DDK = 5 Speed HD Manual
			EP0 = All 2.5L	DG4 = Multispeed Automatic 45RFE
			EH0 = All 3.9L	DG0 = All Automatic Transmissions
			EM0 = All 5.9L	DBB = All Manual Transmissions
			EV0 = All 4.7L	

Input Clutch [45RFE] [DG4]
Figure 45RFE-410

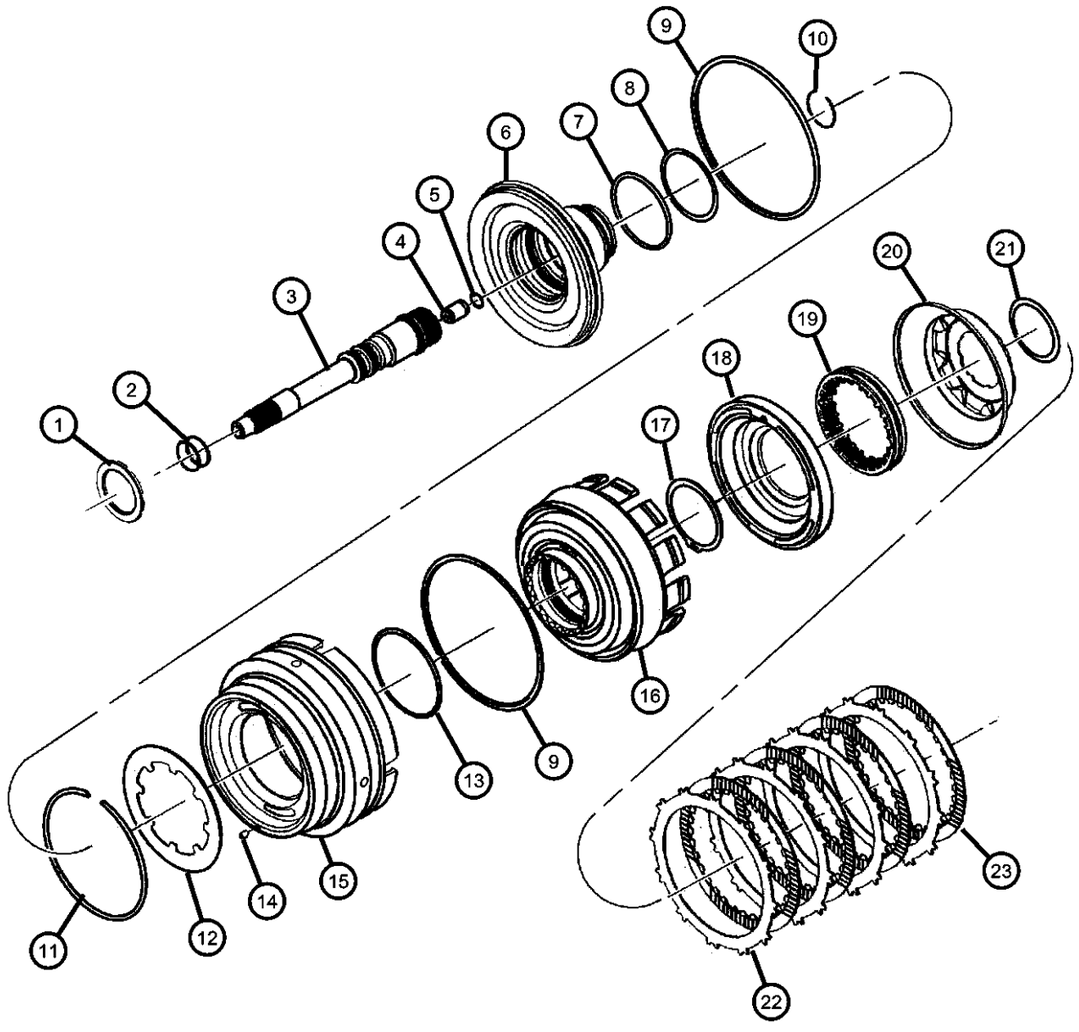

ITEM	PART NUMBER	QTY	LINE	SERIES	BODY	ENGINE	TRANS	TRIM	DESCRIPTION
11									SNAP RING, Transmission
	04799088	1	5				DG4		
		1	1				DG4		
12									SPRING, Piston Return
	04799087	1	5				DG4		
		1	1				DG4		
13									O RING, Reverse & O/Drive Clutch Piston, Transmission, PKG 05013090AA
	04799089	1	5				DG4		
		1	1				DG4		
14									FILTER, Reverse And O/D Clutch
	04531903	1	5				DG4		
		1	1				DG4		
15									PISTON, Reverse and Overdrive
	04799645	1	5				DG4		
		1	1				DG4		
16									RETAINER, Transmission Input Clutch
	04799648	1	5				DG4		
		1	1				DG4		
17									SNAP RING
	04799097	1	5				DG4		
		1	1				DG4		
18									PISTON, Underdrive
	04799650	1	5				DG4		
		1	1				DG4		
19									SPRING, Undredrive Piston, PKG 05013090AA
	04799101	1	5				DG4		
		1	1				DG4		
20									PISTON, Underdrive
	04799652	1	5				DG4		
		1	1				DG4		

DAKOTA (AN)

SERIES	LINE	BODY	ENGINE	TRANSMISSION
L = Dakota (All)	1 = Dakota 2WD	61 = Regular Cab (112 WB)	EPE = 2.5L 4 Cylinder	DGK = 4 Speed Automatic 42RE
	5 = Dakota 4WD	31 = Club Cab (131 WB)	EHC = 3.9L 6 Cylinder	DGT = 4 Speed Automatic 46RE
		84 = Quad Cab (131 WB)	EML = 5.0L 8 Cylinder	DDC = 5 Speed HD Manual
			EVA = 4.7L Magnum V8	DDK = 5 Speed HD Manual
			EP0 = All 2.5L	DG4 = Multispeed Automatic 45RFE
			EH0 = All 3.9L	DG0 = All Automatic Transmissions
			EM0 = All 5.9L	DBB = All Manual Transmissions
			EV0 = All 4.7L	

Input Clutch [45RFE] [DG4]
Figure 45RFE-410

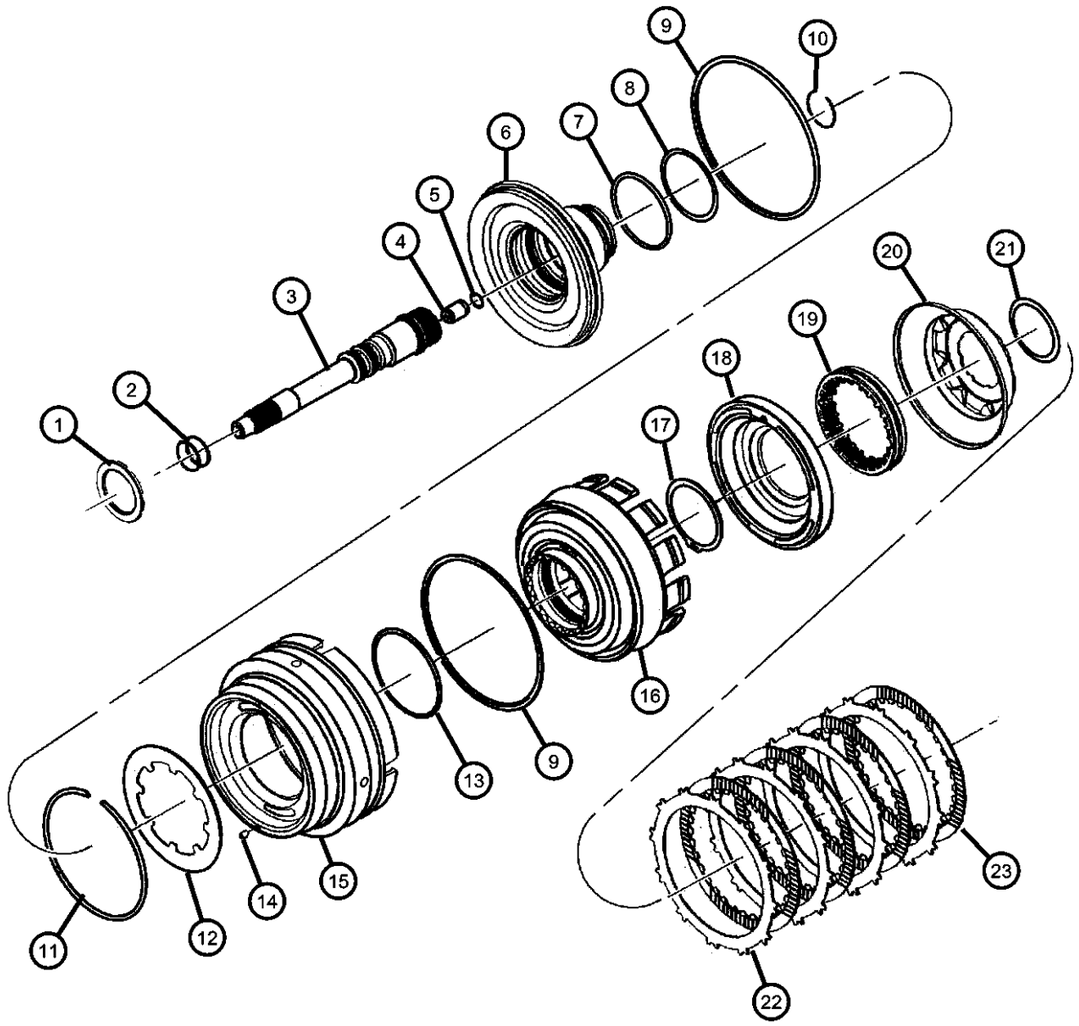

ITEM	PART NUMBER	QTY	LINE	SERIES	BODY	ENGINE	TRANS	TRIM	DESCRIPTION
21									SNAP RING, Transmission, PKG 05013090AA
	04799103	1	5				DG4		
		1	1				DG4		
22		1							PLATE, PKG 05013090AA, (NOT SERVICED)
23		1							DISC, Clutch, PKG 05013090AA, (NOT SERVICED)

DAKOTA (AN)

SERIES	LINE	BODY	ENGINE	TRANSMISSION
L = Dakota (All)	1 = Dakota 2WD	61 = Regular Cab (112 WB)	EPE = 2.5L 4 Cylinder	DGK = 4 Speed Automatic 42RE
	5 = Dakota 4WD	31 = Club Cab (131 WB)	EHC = 3.9L 6 Cylinder	DGT = 4 Speed Automatic 46RE
		84 = Quad Cab (131 WB)	EML = 5.0L 8 Cylinder	DDC = 5 Speed HD Manual
			EVA = 4.7L Magnum V8	DDK = 5 Speed HD Manual
			EP0 = All 2.5L	DG4 = Multispeed Automatic 45RFE
			EH0 = All 3.9L	DG0 = All Automatic Transmissions
			EM0 = All 5.9L	DBB = All Manual Transmissions
			EV0 = All 4.7L	

Underdrive [45RFE] [DG4]
Figure 45RFE-420

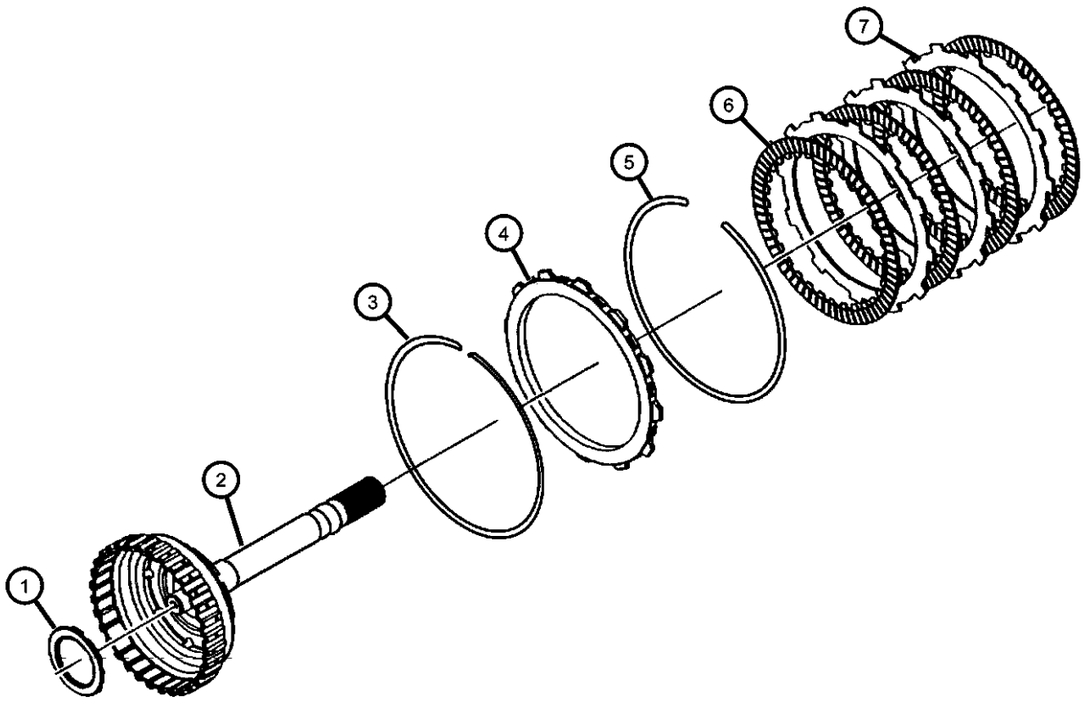

ITEM	PART NUMBER	QTY	LINE	SERIES	BODY	ENGINE	TRANS	TRIM	DESCRIPTION
NOTES:									
[DG4]= Multi- Speed Automatic Transmission[45RFE]									
1									THRUST BEARING, Needle Roller
	04799469	1	5				DG4		
		1	1				DG4		
2									HUB AND SHAFT, Underdrive Clutch
	04799546	1	5				DG4		
		1	1				DG4		
3									SNAP RING, Transmission
	04799760	1	5				DG4		
		1	1				DG4		
4									PLATE, Transmission Clutch Reaction
	04799108AB	AR	5				DG4		Thick 3.05/3.21
		AR	1				DG4		Thick 3.05/3.21
5		AR							SNAP RING, PKG 05013090AA, (NOT SERVICED),
6		AR							DISC, Clutch, PKG 05013090AA, (NOT SERVICED)
7		AR							PLATE, PKG 05013090AA, (NOT SERVICED)

DAKOTA (AN)

SERIES	LINE	BODY	ENGINE	TRANSMISSION
L = Dakota (All)	1 = Dakota 2WD	61 = Regular Cab (112 WB)	EPE = 2.5L 4 Cylinder	DGK = 4 Speed Automatic 42RE
	5 = Dakota 4WD	31 = Club Cab (131 WB)	EHC = 3.9L 6 Cylinder	DGT = 4 Speed Automatic 46RE
		84 = Quad Cab (131 WB)	EML = 5.0L 8 Cylinder	DDC = 5 Speed HD Manual
			EVA = 4.7L Magnum V8	DDK = 5 Speed HD Manual
			EP0 = All 2.5L	DG4 = Multispeed Automatic 45RFE
			EH0 = All 3.9L	DG0 = All Automatic Transmissions
			EM0 = All 5.9L	DBB = All Manual Transmissions
			EV0 = All 4.7L	

AR = use ase required - = Non illustrrated part

Overdrive [45RFE] [DG4]
Figure 45RFE-430

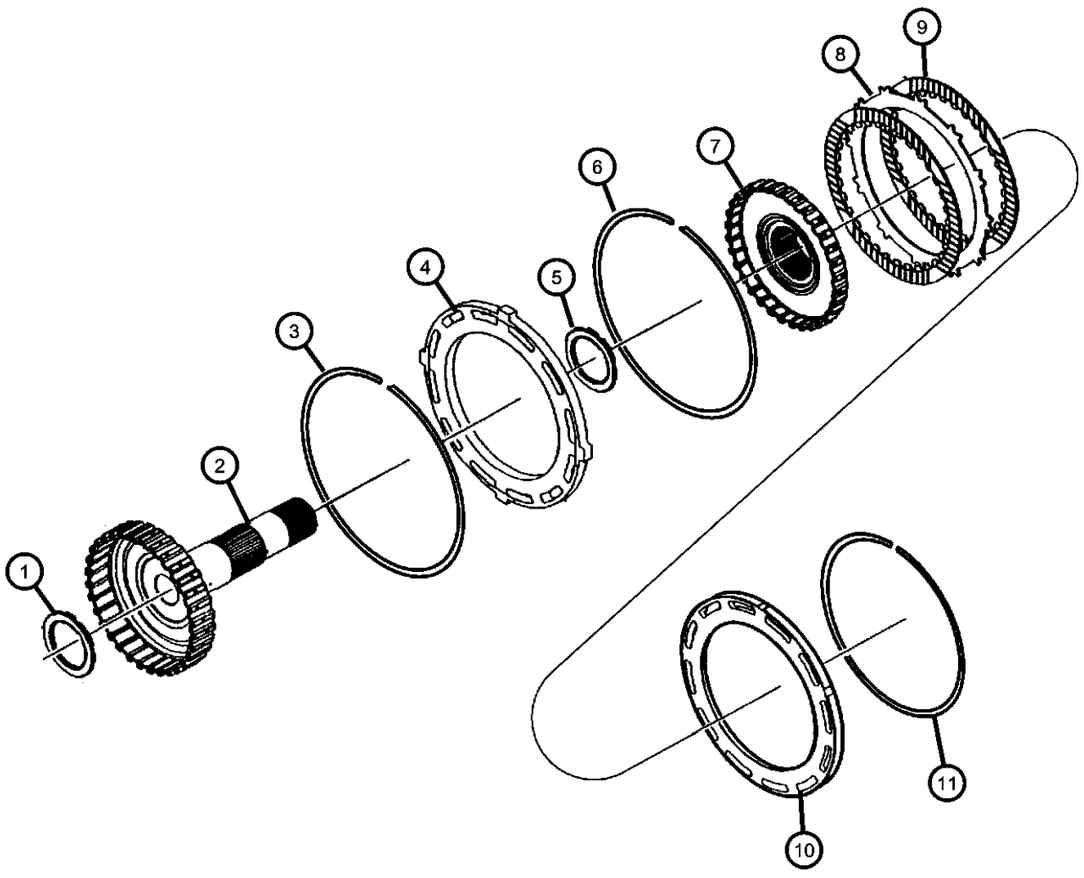

ITEM	PART NUMBER	QTY	LINE	SERIES	BODY	ENGINE	TRANS	TRIM	DESCRIPTION
NOTES:									
[DG4]= Multi- Speed Automatic Transmission[45RFE]									
1									THRUST BEARING, Needle Roller
	04799469	1	5				DG4		
		1	1				DG4		
2									HUB AND SHAFT, Overdrive Clutch
	04799550	1	5				DG4		
		1	1				DG4		
3									SNAP RING, Overdrive Clutch
	04799118	1	5				DG4		
		1	1				DG4		
4									PLATE, Clutch Pressure
	04799116	1	5				DG4		
		1	1				DG4		
5									THRUST BEARING, Needle Roller
	04799469	1	5				DG4		
		1	1				DG4		
6									SNAP RING, Transmission
	04799117	1	5				DG4		
		1	1				DG4		
7									HUB AND SHAFT, Reverse Clutch
	04799556	1	5				DG4		
		1	1				DG4		
8		1							PLATE, PKG 05013090AA, (NOT SERVICED)
9		1							DISC, Clutch, PKG 05013090AA, (NOT SERVICED)
10									PLATE, Transmission Clutch Reaction
	04799121	1	5				DG4		
		1	1				DG4		
11		1							SNAP RING, PKG 05013090AA, (NOT SERVICED)

DAKOTA (AN)

SERIES	LINE	BODY	ENGINE	TRANSMISSION
L = Dakota (All)	1 = Dakota 2WD	61 = Regular Cab (112 WB)	EPE = 2.5L 4 Cylinder	DGK = 4 Speed Automatic 42RE
	5 = Dakota 4WD	31 = Club Cab (131 WB)	EHC = 3.9L 6 Cylinder	DGT = 4 Speed Automatic 46RE
		84 = Quad Cab (131 WB)	EML = 5.0L 8 Cylinder	DDC = 5 Speed HD Manual
			EVA = 4.7L Magnum V8	DDK = 5 Speed HD Manual
			EP0 = All 2.5L	DG4 = Multispeed Automatic 45RFE
			EH0 = All 3.9L	DG0 = All Automatic Transmissions
			EM0 = All 5.9L	DBB = All Manual Transmissions
			EV0 = All 4.7L	

2/4 Clutch Retainer [45RFE] [DG4]
Figure 45RFE-440

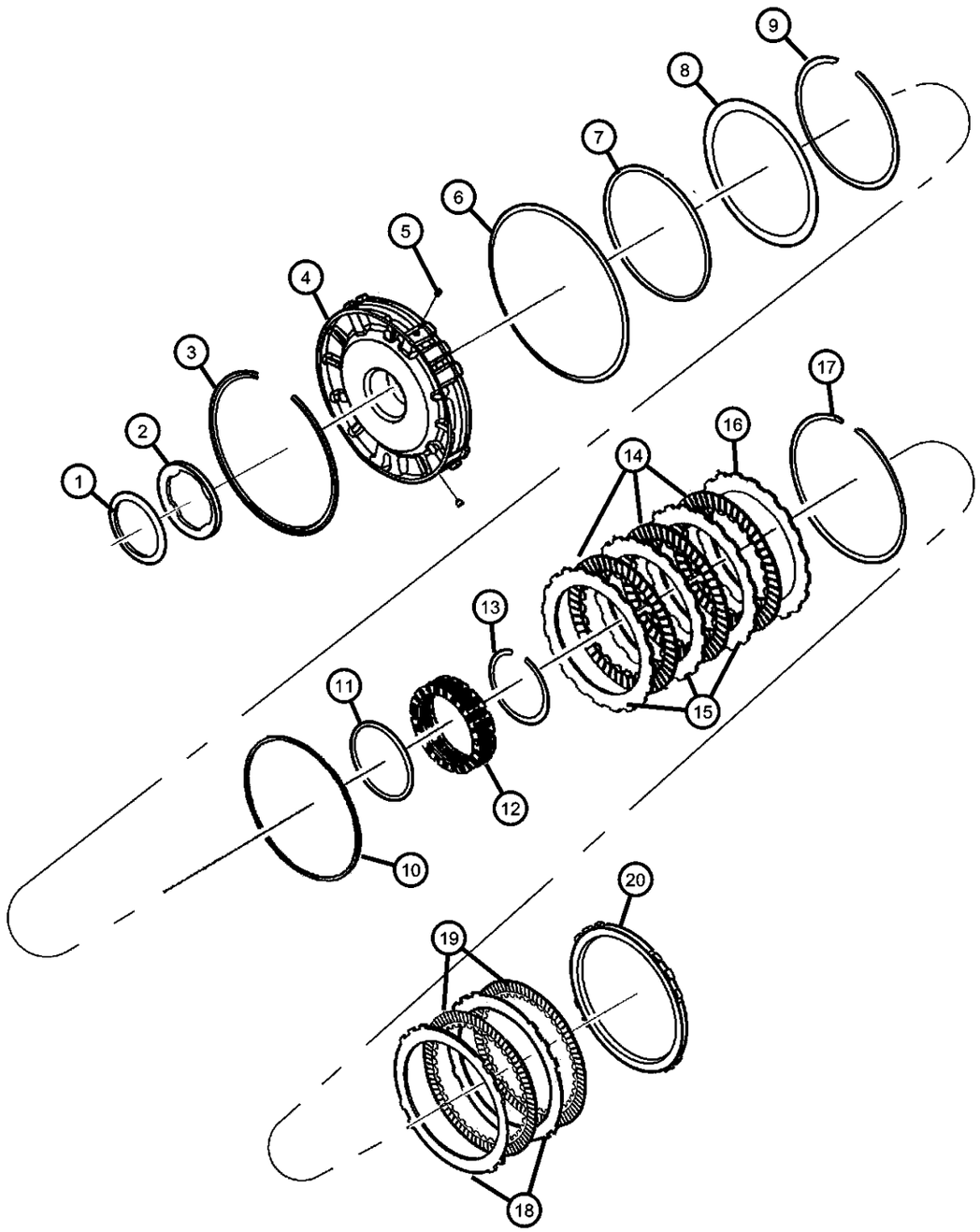

ITEM	PART NUMBER	QTY	LINE	SERIES	BODY	ENGINE	TRANS	TRIM	DESCRIPTION
NOTES:									
[DG4]= Multi- Speed Automatic Transmission[45RFE]									
1									THRUST BEARING, Needle Roller
	04799936AB	1	5				DG4		
		1	1				DG4		
2		1							PLATE, Clutch Hub Thrust, PKG 05013093AB, (NOT SERVICED)
3									SNAP RING, Transmission
	04799680AB	1	5				DG4		
		1	1				DG4		
4									RETAINER, Transmission 2nd and 4th Clutch Piston
	04799498	1	5				DG4		
		1	1				DG4		
5									BLEED ORIFICE, Transmission
	04799086	2	5				DG4		
		2	1				DG4		
6									SNAP RING, Transmission
	04799174	1	5				DG4		
		1	1				DG4		
7		1							RING, PKG 05013093AB, (NOT SERVICED)
8									SPRING, 2nd And 4th Clutch Piston
	04799521	1	5				DG4		
		1	1				DG4		
9									SNAP RING, Transmission
	04799522AB	1	5				DG4		
		1	1				DG4		
10		1							RING, PKG 05013093AB, (NOT SERVICED)
11		1							RING, PKG 05013093AB, (NOT SERVICED)
12									SPRING, 2nd And 4th Clutch Piston
	04799527AB	1	5				DG4		
		1	1				DG4		

DAKOTA (AN)

SERIES	LINE	BODY	ENGINE	TRANSMISSION
L = Dakota (All)	1 = Dakota 2WD	61 = Regular Cab (112 WB)	EPE = 2.5L 4 Cylinder	DGK = 4 Speed Automatic 42RE
	5 = Dakota 4WD	31 = Club Cab (131 WB)	EHC = 3.9L 6 Cylinder	DGT = 4 Speed Automatic 46RE
		84 = Quad Cab (131 WB)	EML = 5.0L 8 Cylinder	DDC = 5 Speed HD Manual
			EVA = 4.7L Magnum V8	DDK = 5 Speed HD Manual
			EP0 = All 2.5L	DG4 = Multispeed Automatic 45RFE
			EH0 = All 3.9L	DG0 = All Automatic Transmissions
			EM0 = All 5.9L	DBB = All Manual Transmissions
			EV0 = All 4.7L	

2/4 Clutch Retainer [45RFE] [DG4]
Figure 45RFE-440

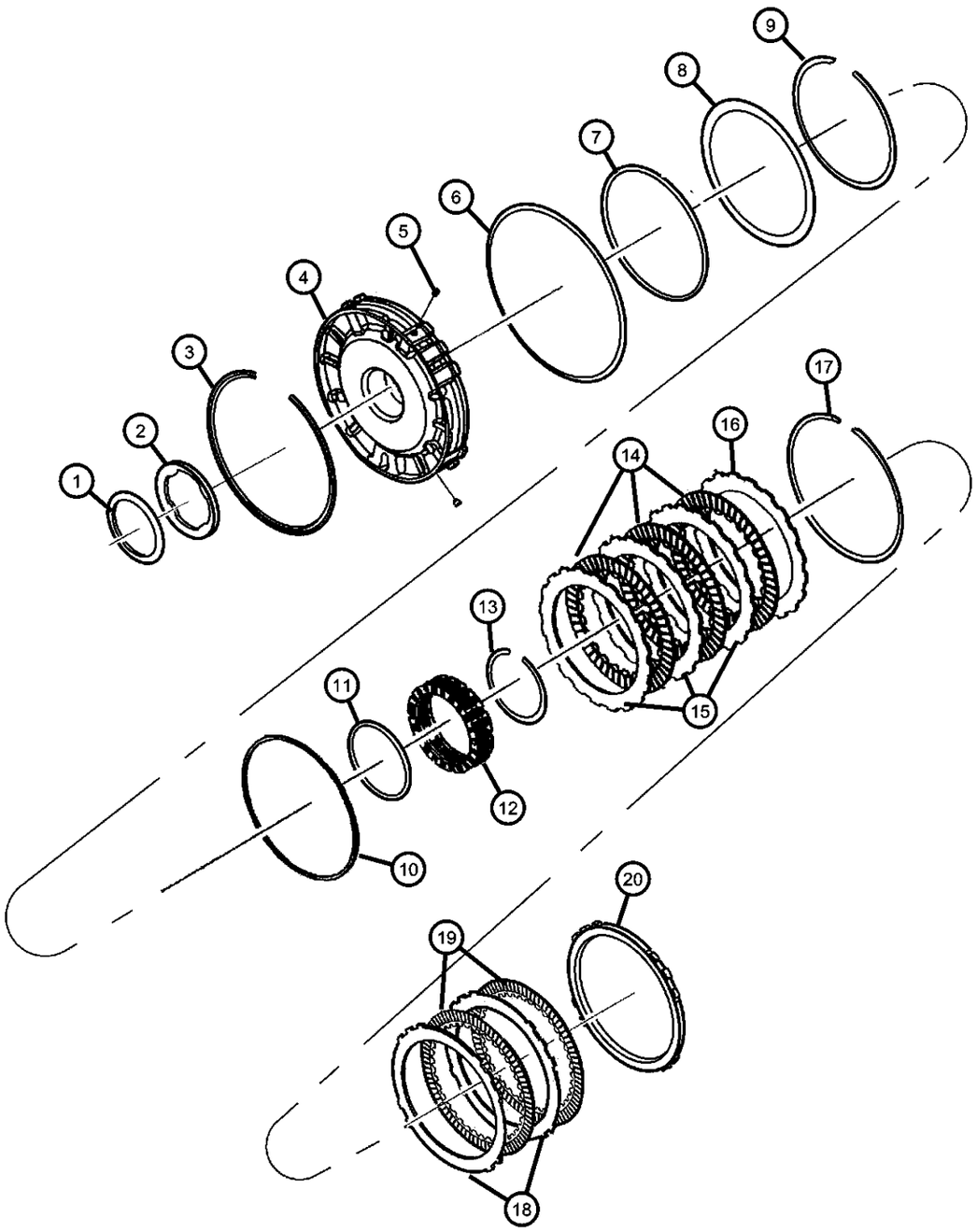

ITEM	PART NUMBER	QTY	LINE	SERIES	BODY	ENGINE	TRANS	TRIM	DESCRIPTION
13									SNAP RING, Transmission
	04799528AB	1	5				DG4		
		1	1				DG4		
14		1							DISC, Clutch, PKG 05013087AA, (NOT SERVICED)
15		1							PLATE, Clutch Separator, PKG 05013087AA, (NOT SERVICED)
16									PLATE, Transmission Clutch Reaction
	04799533	1	5				DG4		
		1	1				DG4		
17		1							SNAP RING, Transmission, PKG 05013087AA, (NOT SERVICED)
18		1							PLATE, PKG 05013087AA, (NOT SERVICED)
19		1							DISC, Clutch, PKG 05013087AA, (NOT SERVICED)
20									PLATE, Transmission Clutch Reaction
	04799687AB	1	5				DG4		
		1	1				DG4		

DAKOTA (AN)

SERIES	LINE	BODY	ENGINE	TRANSMISSION
L = Dakota (All)	1 = Dakota 2WD	61 = Regular Cab (112 WB)	EPE = 2.5L 4 Cylinder	DGK = 4 Speed Automatic 42RE
	5 = Dakota 4WD	31 = Club Cab (131 WB)	EHC = 3.9L 6 Cylinder	DGT = 4 Speed Automatic 46RE
		84 = Quad Cab (131 WB)	EML = 5.0L 8 Cylinder	DDC = 5 Speed HD Manual
			EVA = 4.7L Magnum V8	DDK = 5 Speed HD Manual
			EP0 = All 2.5L	DG4 = Multispeed Automatic 45RFE
			EH0 = All 3.9L	DG0 = All Automatic Transmissions
			EM0 = All 5.9L	DBB = All Manual Transmissions
			EV0 = All 4.7L	

Input / Reverse Planetary [45RFE] [DG4]
Figure 45RFE-450

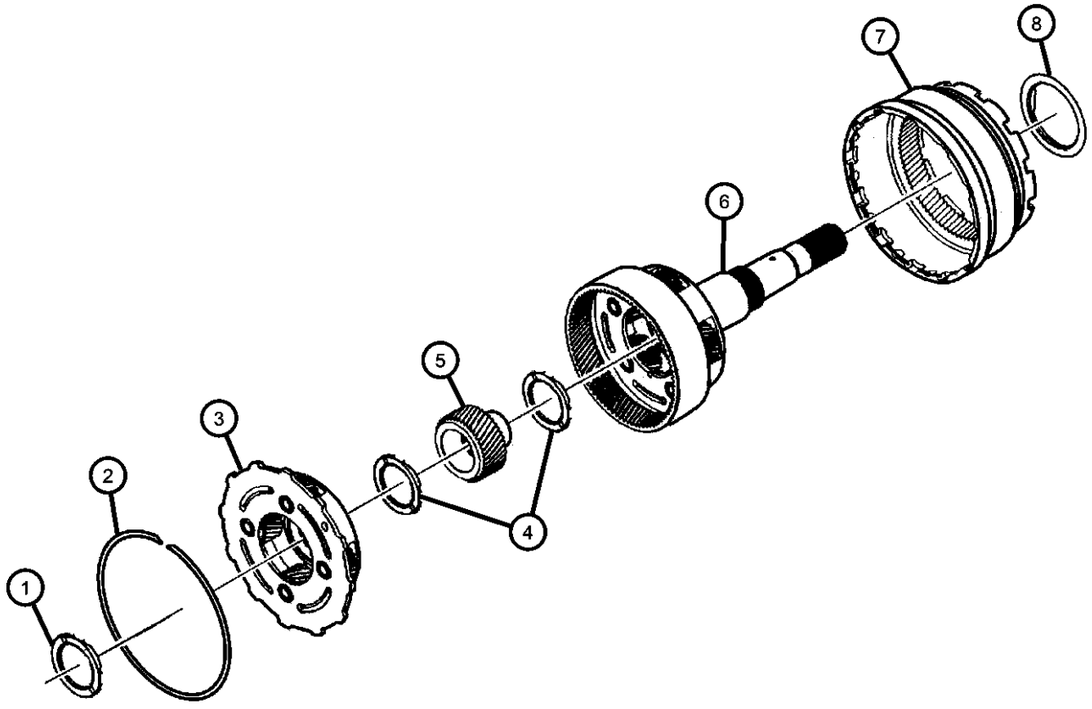

ITEM	PART NUMBER	QTY	LINE	SERIES	BODY	ENGINE	TRANS	TRIM	DESCRIPTION
NOTES:									
Sales Codes:									
EVA = 4.7L Power Tech Engine.									
1									THRUST BEARING, Needle Roller
	04799469	1	5				DG4		
		1	1				DG4		
2									SNAP RING
	04799247	1	5				DG4		
		1	1				DG4		
3									REVERSE CARRIER KIT
	05134382AA	1	5				DG4		
		1	1				DG4		
4									THRUST BEARING, Needle Roller
	04799469	1	5				DG4		
		1	1				DG4		
5									GEAR, Input Sun
	04799586	1	5				DG4		
		1	1				DG4		
6									INPUT CARRIER KIT
	05135165AA	1	5				DG4		
		1	1				DG4		
7									GEAR, Annulus
	04799501	1	5				DG4		
		1	1				DG4		
8									THRUST BEARING, Needle Roller
	04799459	1	5				DG4		
		1	1				DG4		

DAKOTA (AN)

SERIES	LINE	BODY	ENGINE	TRANSMISSION
L = Dakota (All)	1 = Dakota 2WD	61 = Regular Cab (112 WB)	EPE = 2.5L 4 Cylinder	DGK = 4 Speed Automatic 42RE
	5 = Dakota 4WD	31 = Club Cab (131 WB)	EHC = 3.9L 6 Cylinder	DGT = 4 Speed Automatic 46RE
		84 = Quad Cab (131 WB)	EML = 5.0L 8 Cylinder	DDC = 5 Speed HD Manual
			EVA = 4.7L Magnum V8	DDK = 5 Speed HD Manual
			EP0 = All 2.5L	DG4 = Multispeed Automatic 45RFE
			EH0 = All 3.9L	DG0 = All Automatic Transmissions
			EM0 = All 5.9L	DBB = All Manual Transmissions
			EV0 = All 4.7L	

Reaction Annulus / Sun Gear [45RFE] [DG4]
Figure 45RFE-460

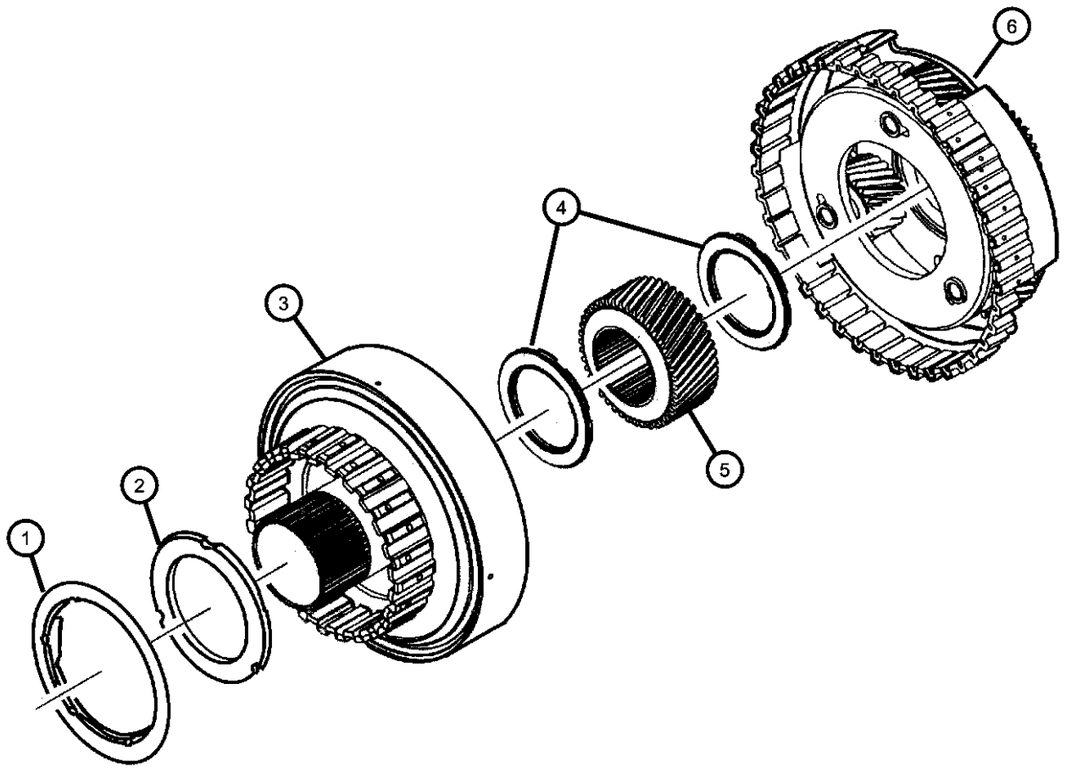

ITEM	PART NUMBER	QTY	LINE	SERIES	BODY	ENGINE	TRANS	TRIM	DESCRIPTION
NOTES:									
[DG4]= Multi- Speed Automatic Transmission[45RFE]									
1									THRUST BEARING, Needle Roller
	04799459	1	5				DG4		
		1	1				DG4		
2		1							THRUST WASHER, Planetary Carrier, PKG 05013092AA, (NOT SERVICED)
3									GEAR, Annulus
	04799604	1	5				DG4		
		1	1				DG4		
4									THRUST BEARING, Needle Roller
	04799469	1	5				DG4		
		1	1				DG4		
5									GEAR, Reaction Sun
	04799602	1	5				DG4		
		1	1				DG4		
6									CARRIER, Reaction Complete
	04799619	1	5				DG4		
		1	1				DG4		

DAKOTA (AN)

SERIES	LINE	BODY	ENGINE	TRANSMISSION
L = Dakota (All)	1 = Dakota 2WD	61 = Regular Cab (112 WB)	EPE = 2.5L 4 Cylinder	DGK = 4 Speed Automatic 42RE
	5 = Dakota 4WD	31 = Club Cab (131 WB)	EHC = 3.9L 6 Cylinder	DGT = 4 Speed Automatic 46RE
		84 = Quad Cab (131 WB)	EML = 5.0L 8 Cylinder	DDC = 5 Speed HD Manual
			EVA = 4.7L Magnum V8	DDK = 5 Speed HD Manual
			EP0 = All 2.5L	DG4 = Multispeed Automatic 45RFE
			EH0 = All 3.9L	DG0 = All Automatic Transmissions
			EM0 = All 5.9L	DBB = All Manual Transmissions
			EV0 = All 4.7L	

Low / Reverse Clutch
Figure 45RFE-470

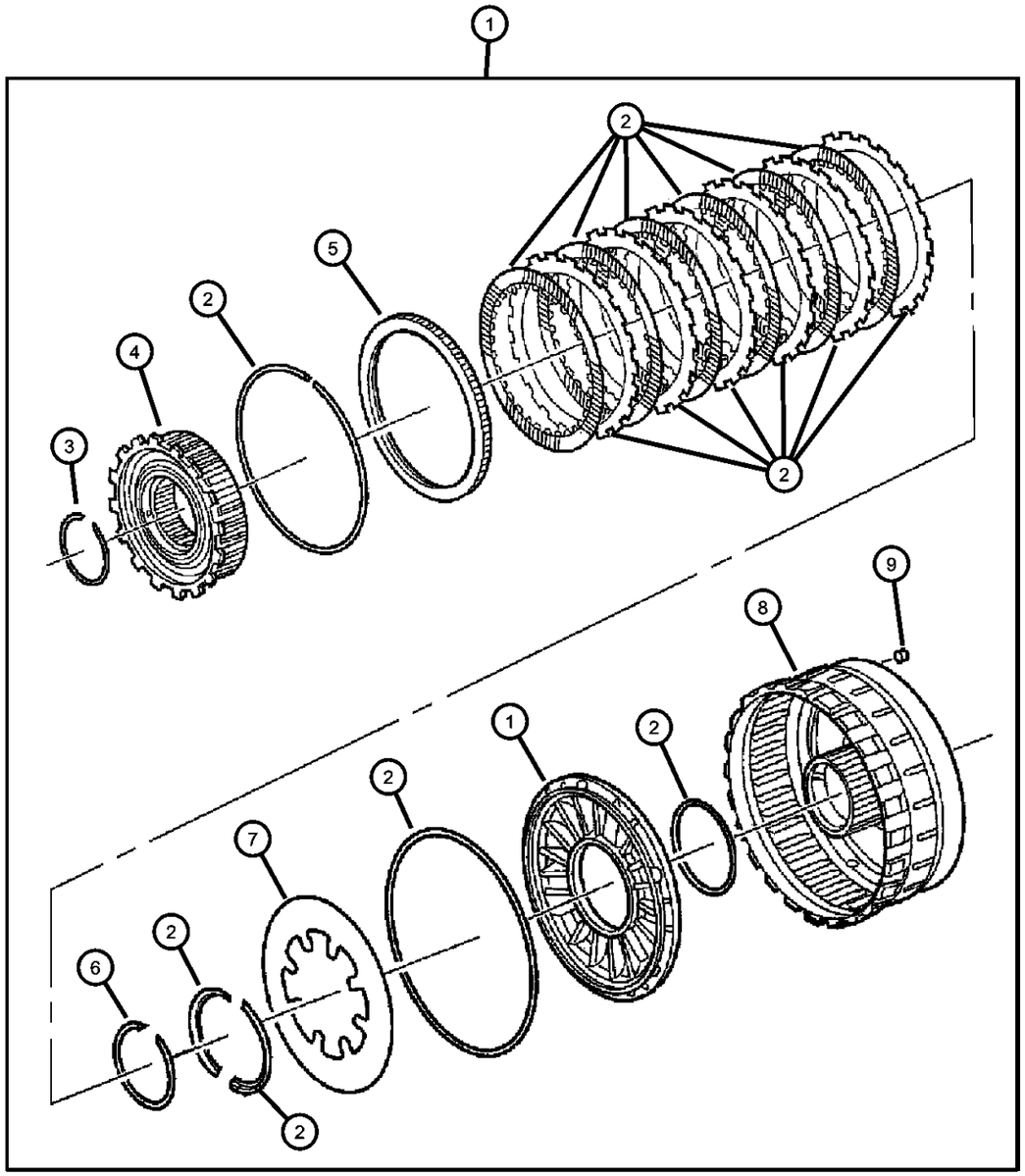

ITEM	PART NUMBER	QTY	LINE	SERIES	BODY	ENGINE	TRANS	TRIM	DESCRIPTION
1									CLUTCH, L/R Clutch
	04799457	1	5				DG4		
		1	1				DG4		
2									CLUTCH PACKAGE, Automatic Transmission, Low/Reverse
	05013091AA	1	1				DG4		
		1	5				DG4		
3									SNAP RING
	04799863AA	1	5				DG4		
		1	1				DG4		
4									CLUTCH, Overrunning
	04799465	1	5				DG4		
		1	1				DG4		
5									PLATE, Transmission Clutch Reaction
	04799667	1	5				DG4		
		1	1				DG4		
6									SNAP RING
	04799863AA	1	5				DG4		
		1	1				DG4		
7									CLUTCH PACKAGE, Automatic Transmission, Low/Reverse
	05179008AA	1	5				DG4		
		1	1				DG4		
8									RETAINER, Clutch
	04799635	1	5				DG4		
		1	1				DG4		
9									BLEED ORIFICE, Transmission
	04799086	1	5				DG4		
		1	1				DG4		

DAKOTA (AN)

SERIES	LINE	BODY	ENGINE	TRANSMISSION
L = Dakota (All)	1 = Dakota 2WD	61 = Regular Cab (112 WB)	EPE = 2.5L 4 Cylinder	DGK = 4 Speed Automatic 42RE
	5 = Dakota 4WD	31 = Club Cab (131 WB)	EHC = 3.9L 6 Cylinder	DGT = 4 Speed Automatic 46RE
		84 = Quad Cab (131 WB)	EML = 5.0L 8 Cylinder	DDC = 5 Speed HD Manual
			EVA = 4.7L Magnum V8	DDK = 5 Speed HD Manual
			EP0 = All 2.5L	DG4 = Multispeed Automatic 45RFE
			EH0 = All 3.9L	DG0 = All Automatic Transmissions
			EM0 = All 5.9L	DBB = All Manual Transmissions
			EV0 = All 4.7L	

Valve Body [45RFE] [DG4]
Figure 45RFE-710

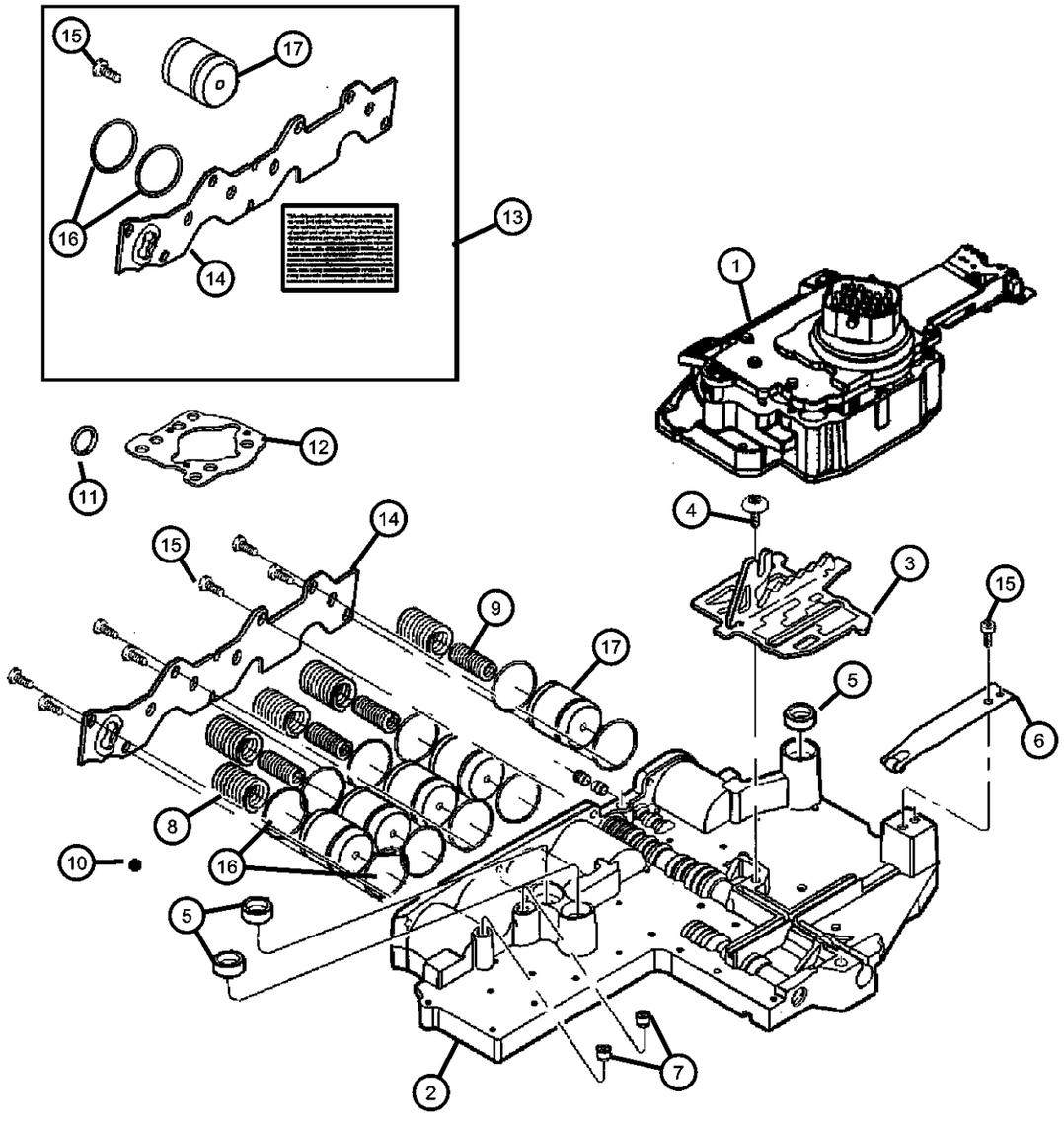

ITEM	PART NUMBER	QTY	LINE	SERIES	BODY	ENGINE	TRANS	TRIM	DESCRIPTION
1									SOLENOID, Transmission
	04799934AD	1	5				DG4		
		1	1				DG4		
2									VALVE BODY, Transfer Plate and Valve
	04799588	1	1				DG4		
	05080732AA	1	5				DG4		
3									PLATE, Manual Valve Cam
	04799654	1	5				DG4		
		1	1				DG4		
4									SCREW, Shoulder/Truss, M5x.8x12.5
	06501710	1	5				DG4		
		1	1				DG4		
5									SEAL, Clutch Feed
	04799778	3	5				DG4		
		3	1				DG4		
6									DETENT, Valve Body
	04799593	1	5				DG4		
		1	1				DG4		
7									BLEED ORIFICE, Transmission
	04799086	2	1				DG4		
		2	5				DG4		
8									SPRING, Accumulator
	04471880	5	5				DG4		
		5	1				DG4		
9									SPRING, Accumulator
	04567575	4	5				DG4		
		4	1				DG4		
10									BALL, Check
	04446602	7	5				DG4		
		7	1				DG4		
11									O RING, Control Valve
	06505335AA	1	5				DG4		

DAKOTA (AN)

SERIES	LINE	BODY	ENGINE	TRANSMISSION
L = Dakota (All)	1 = Dakota 2WD	61 = Regular Cab (112 WB)	EPE = 2.5L 4 Cylinder	DGK = 4 Speed Automatic 42RE
	5 = Dakota 4WD	31 = Club Cab (131 WB)	EHC = 3.9L 6 Cylinder	DGT = 4 Speed Automatic 46RE
		84 = Quad Cab (131 WB)	EML = 5.0L 8 Cylinder	DDC = 5 Speed HD Manual
			EVA = 4.7L Magnum V8	DDK = 5 Speed HD Manual
			EP0 = All 2.5L	DG4 = Multispeed Automatic 45RFE
			EH0 = All 3.9L	DG0 = All Automatic Transmissions
			EM0 = All 5.9L	DBB = All Manual Transmissions
			EV0 = All 4.7L	

AR = use ase required - = Non illustrrated part

Valve Body [45RFE] [DG4]
Figure 45RFE-710

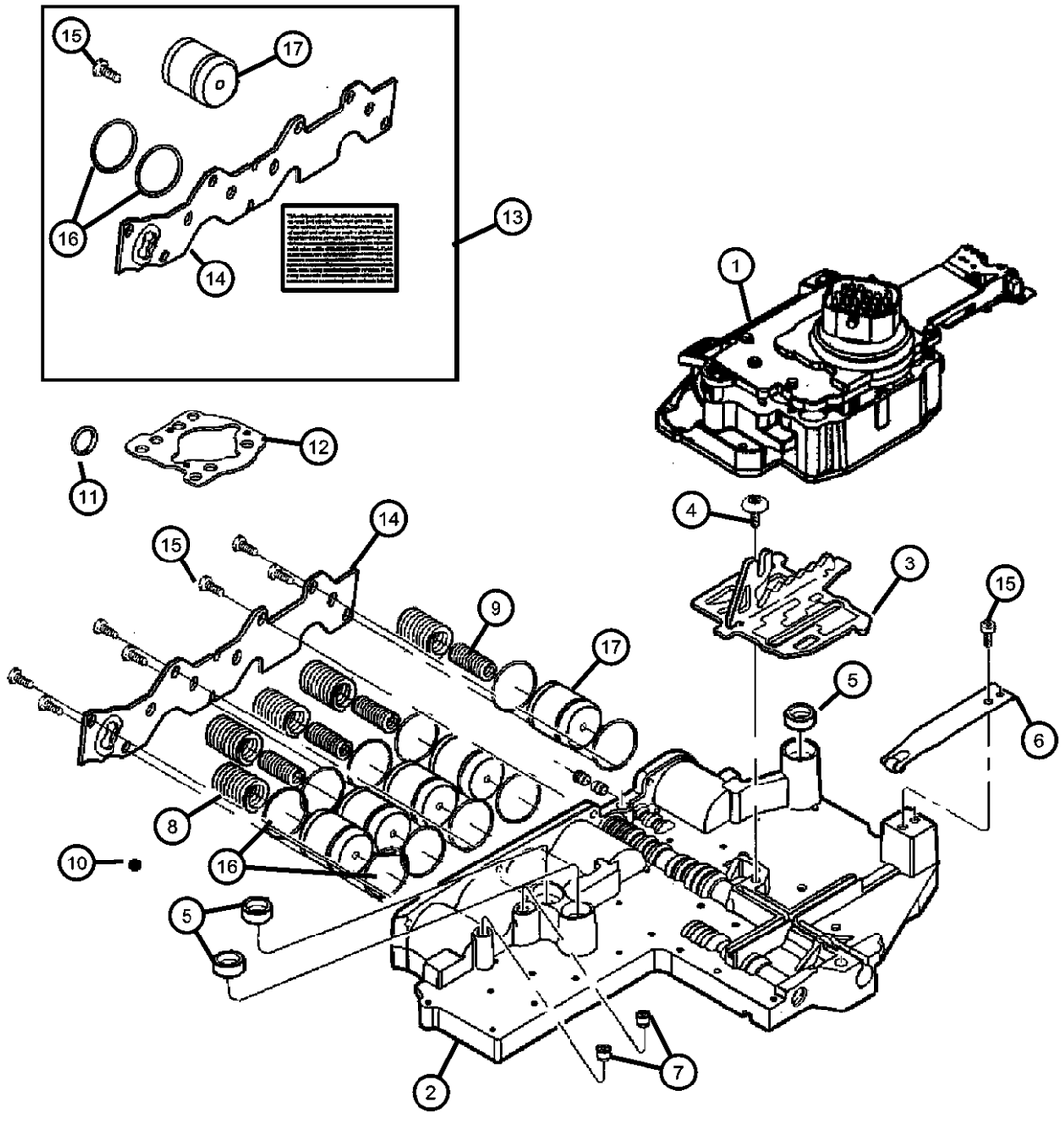

ITEM	PART NUMBER	QTY	LINE	SERIES	BODY	ENGINE	TRANS	TRIM	DESCRIPTION
		1	1				DG4		
12									SEAL, Insulator
	04799986AA	1	5				DG4		
		1	1				DG4		
13									ACCUMULATOR KIT, Accumulator Cover
	05174633AA	1	5				DG4		
		1	1				DG4		
14									COVER, Accumulator
	04799598AB	1	5				DG4		
		1	1				DG4		
15									SCREW, Pan Head, M5 x 0.8 x 12.60
	06503232	7	5				DG4		
		7	1				DG4		
16									SEAL, Accumulator
	04446544	10	5				DG4		
		10	1				DG4		
17									PISTON, Accumulator
	04446620	5	5				DG4		
		5	1				DG4		

DAKOTA (AN)

SERIES	LINE	BODY	ENGINE	TRANSMISSION
L = Dakota (All)	1 = Dakota 2WD	61 = Regular Cab (112 WB)	EPE = 2.5L 4 Cylinder	DGK = 4 Speed Automatic 42RE
	5 = Dakota 4WD	31 = Club Cab (131 WB)	EHC = 3.9L 6 Cylinder	DGT = 4 Speed Automatic 46RE
		84 = Quad Cab (131 WB)	EML = 5.0L 8 Cylinder	DDC = 5 Speed HD Manual
			EVA = 4.7L Magnum V8	DDK = 5 Speed HD Manual
			EP0 = All 2.5L	DG4 = Multispeed Automatic 45RFE
			EH0 = All 3.9L	DG0 = All Automatic Transmissions
			EM0 = All 5.9L	DBB = All Manual Transmissions
			EV0 = All 4.7L	

Parking Sprag [45RFE] [DG4]
Figure 45RFE-720

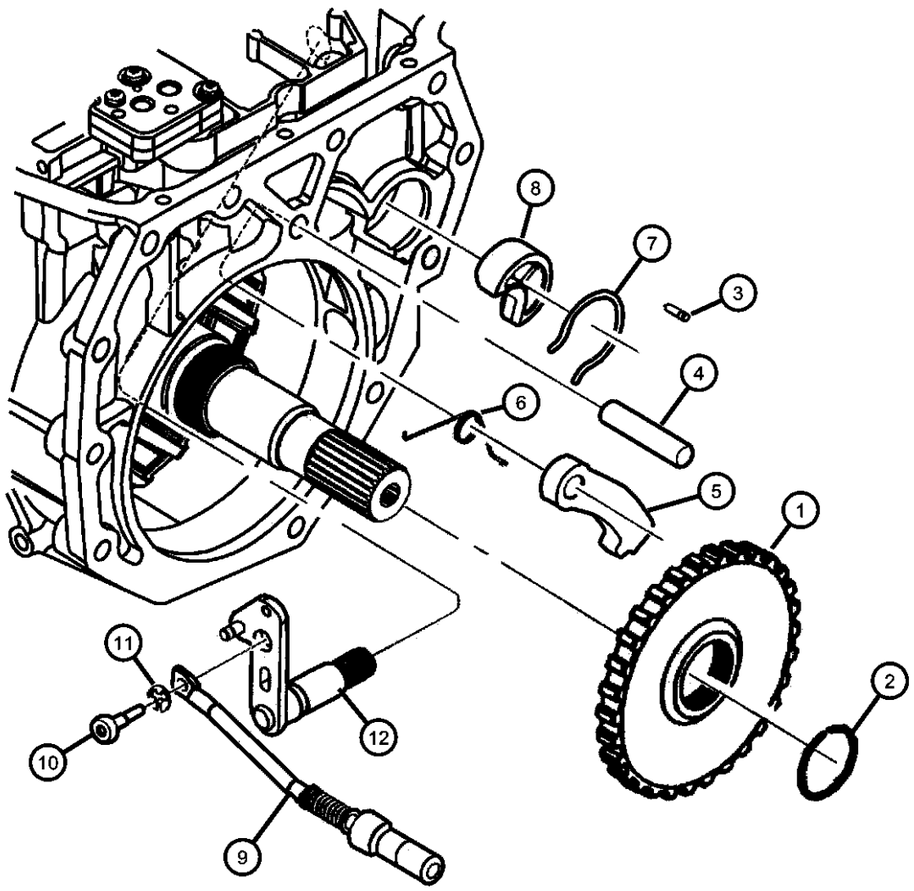

ITEM	PART NUMBER	QTY	LINE	SERIES	BODY	ENGINE	TRANS	TRIM	DESCRIPTION
NOTES:									
[DG4]= Multi- Speed Automatic Transmission[45RFE]									
1									SPRAG, Transmission Parking
	04799493	1	5				DG4		
		1	1				DG4		
2									SNAP RING, Transmission
	04799704	1	5				DG4		
		1	1				DG4		
3									PIN
	00456636	1	5				DG4		
		1	1				DG4		
4									SHAFT, Parking Pawl
	04799450	1	5				DG4		
		1	1				DG4		
5									PAWL, Parking Sprag
	04799744AC	1	5				DG4		
		1	1				DG4		
6									SPRING, Torsion
	04799451	1	5				DG4		
		1	1				DG4		
7									SNAP RING
	04799313	1	5				DG4		
		1	1				DG4		
8									GUIDE, Parking Sprag Pawl
	04799774	1	5				DG4		
		1	1				DG4		
9									ROD, Parking Sprag
	04799611	1	5				DG4		
		1	1				DG4		
10									SCREW, M6x1x30
	06504548	1	5				DG4		
		1	1				DG4		
11									SNAP RING, Rod

DAKOTA (AN)

SERIES	LINE	BODY	ENGINE	TRANSMISSION
L = Dakota (All)	1 = Dakota 2WD	61 = Regular Cab (112 WB)	EPE = 2.5L 4 Cylinder	DGK = 4 Speed Automatic 42RE
	5 = Dakota 4WD	31 = Club Cab (131 WB)	EHC = 3.9L 6 Cylinder	DGT = 4 Speed Automatic 46RE
		84 = Quad Cab (131 WB)	EML = 5.0L 8 Cylinder	DDC = 5 Speed HD Manual
			EVA = 4.7L Magnum V8	DDK = 5 Speed HD Manual
			EP0 = All 2.5L	DG4 = Multispeed Automatic 45RFE
			EH0 = All 3.9L	DG0 = All Automatic Transmissions
			EM0 = All 5.9L	DBB = All Manual Transmissions
			EV0 = All 4.7L	

Parking Sprag [45RFE] [DG4]
Figure 45RFE-720

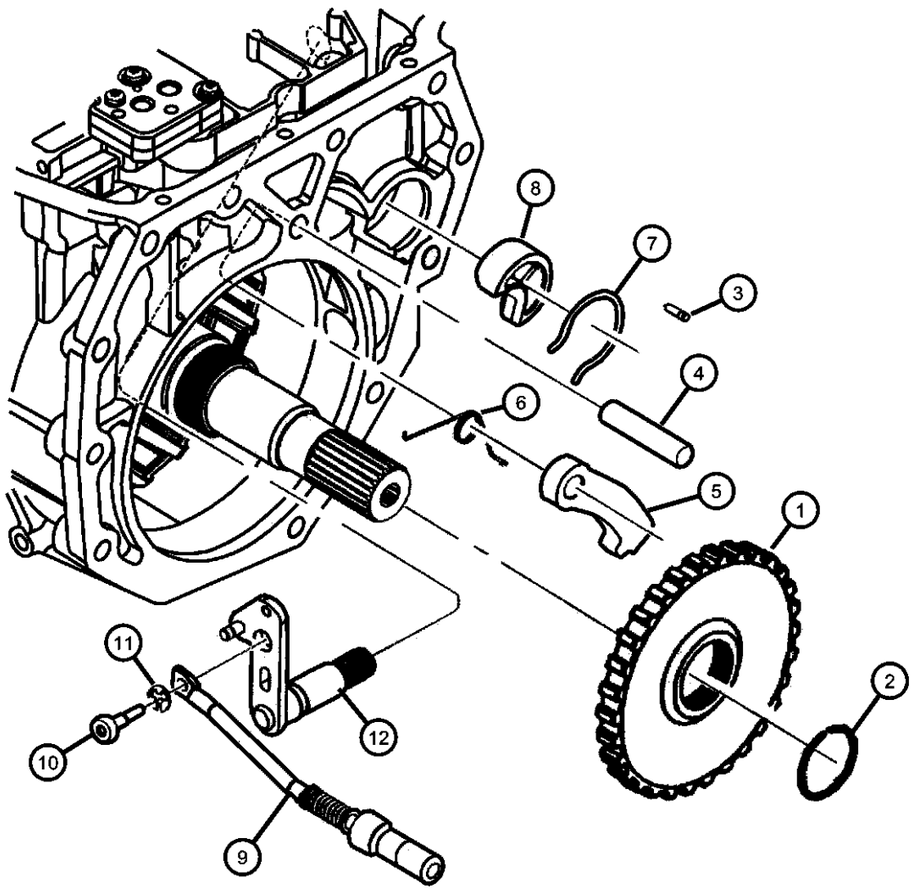

ITEM	PART NUMBER	QTY	LINE	SERIES	BODY	ENGINE	TRANS	TRIM	DESCRIPTION
	06035256	1	5				DG4		
		1	1				DG4		
12									LEVER, Shift Shaft
	04799453	1	5				DG4		
		1	1				DG4		

DAKOTA (AN)

SERIES	LINE	BODY	ENGINE	TRANSMISSION
L = Dakota (All)	1 = Dakota 2WD	61 = Regular Cab (112 WB)	EPE = 2.5L 4 Cylinder	DGK = 4 Speed Automatic 42RE
	5 = Dakota 4WD	31 = Club Cab (131 WB)	EHC = 3.9L 6 Cylinder	DGT = 4 Speed Automatic 46RE
		84 = Quad Cab (131 WB)	EML = 5.0L 8 Cylinder	DDC = 5 Speed HD Manual
			EVA = 4.7L Magnum V8	DDK = 5 Speed HD Manual
			EP0 = All 2.5L	DG4 = Multispeed Automatic 45RFE
			EH0 = All 3.9L	DG0 = All Automatic Transmissions
			EM0 = All 5.9L	DBB = All Manual Transmissions
			EV0 = All 4.7L	

Gearshift Controls [45RFE] [DG4]
Figure 45RFE-1210

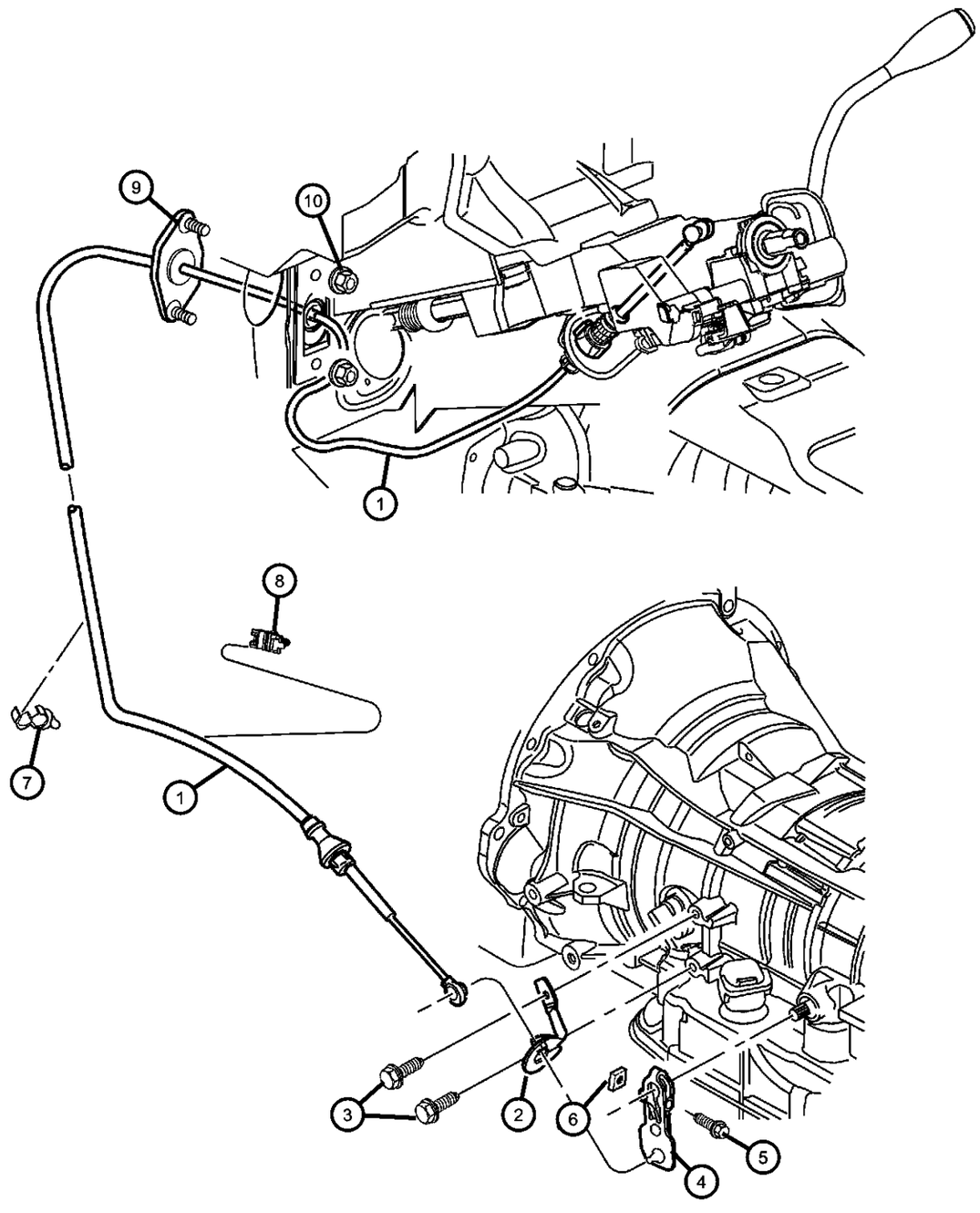

ITEM	PART NUMBER	QTY	LINE	SERIES	BODY	ENGINE	TRANS	TRIM	DESCRIPTION

NOTES: Sales Codes
[DG0] = All Automatic Transmissions
[DG4]= Multi- Speed Automatic Transmission[45RFE]
[EV0] = All 4.7L Gas Engines

1	52110005AE	1					DG4		CABLE, Shift
2	52104176AB	1					DG4		BRACKET, Shift Cable
3	06101758	2				EV0	DG4		SCREW, Hex Head, M8x1.25x20
4	52107848AA	1					DG4		LEVER, Manual Control
5	00180034	1					DG4		SCREW AND WASHER, Hex Head, .25-20x1.50
6	J0120375	1					DG4		NUT, Hex, .250-20
7	56019959	1	5				DG4		CLIP, Wiring
8	04861553AB	1	5				DG0		PIN, Push
9	52113469AB	1					DG0		PLATE, Shift
10	06503269	2					DG0		NUT, Hex, M10-1.5

DAKOTA (AN)

SERIES	LINE	BODY	ENGINE	TRANSMISSION
L = Dakota (All)	1 = Dakota 2WD	61 = Regular Cab (112 WB)	EPE = 2.5L 4 Cylinder	DGK = 4 Speed Automatic 42RE
	5 = Dakota 4WD	31 = Club Cab (131 WB)	EHC = 3.9L 6 Cylinder	DGT = 4 Speed Automatic 46RE
		84 = Quad Cab (131 WB)	EML = 5.0L 8 Cylinder	DDC = 5 Speed HD Manual
			EVA = 4.7L Magnum V8	DDK = 5 Speed HD Manual
			EP0 = All 2.5L	DG4 = Multispeed Automatic 45RFE
			EH0 = All 3.9L	DG0 = All Automatic Transmissions
			EM0 = All 5.9L	DBB = All Manual Transmissions
			EV0 = All 4.7L	

LR CLUTCH PACKAGE 05013091aa

	D-ring, external (L/R piston outer)
	D-ring, internal (L/R piston inner)
(6)	Plate, clutch separator (1.74mm thk)
(6)	Disc assy, clutch (L/R)
	Snap ring, flat (1.5/1.6 thk)
	Snap ring, flat (2.03/2.13 thk)
	Snap ring, flat (2.54/2.68 thk)
(2)	Retainer, c-clip

ITEM	PART NUMBER	QTY	LINE	SERIES	BODY	ENGINE	TRANS	TRIM	DESCRIPTION
1									CLUTCH PACKAGE, Automatic Transmission, Low/Reverse
	05013091AA	1	5				DG4		
		1	1				DG4		

DAKOTA (AN)

SERIES	LINE	BODY	ENGINE	TRANSMISSION
L = Dakota (All)	1 = Dakota 2WD	61 = Regular Cab (112 WB)	EPE = 2.5L 4 Cylinder	DGK = 4 Speed Automatic 42RE
	5 = Dakota 4WD	31 = Club Cab (131 WB)	EHC = 3.9L 6 Cylinder	DGT = 4 Speed Automatic 46RE
		84 = Quad Cab (131 WB)	EML = 5.0L 8 Cylinder	DDC = 5 Speed HD Manual
			EVA = 4.7L Magnum V8	DDK = 5 Speed HD Manual
			EP0 = All 2.5L	DG4 = Multispeed Automatic 45RFE
			EH0 = All 3.9L	DG0 = All Automatic Transmissions
			EM0 = All 5.9L	DBB = All Manual Transmissions
			EV0 = All 4.7L	

SELECTIVE THRUST PLATES **05013093aa**

INPUT CLUTCH THRUST PLATE PKG (1)

	Thrust plate, input clutc 1.52 / 1.61
	Thrust plate, input clutc 1.66 / 1.75
	Thrust plate, input clutc 1.80 / 1.89
	Thrust plate, input clutc 1.94 / 2.03
	Thrust plate, input clutc 2.08 / 2.17
	Thrust plate, input clutc 2.22 / 2.31
	Thrust plate, input clutc 2.36 / 2.45
	Thrust plate, input clutc 2.50 / 2.59
	Thrust plate, input clutc 2.64 / 2.73
	Thrust plate, input clutc 2.78 / 2.87
	Thrust plate, input clutc 2.92 / 3.01
	Thrust plate, input clutc 3.06 / 3.15
	Thrust plate, input clutc 3.20 / 3.29
	Thrust plate, input clutc 3.34 / 3.43
	Thrust plate, input clutc 3.62 / 3.71

ITEM	PART NUMBER	QTY	LINE	SERIES	BODY	ENGINE	TRANS	TRIM	DESCRIPTION
NOTES:									
[DG4]= Multi- Speed Automatic Transmission[45RFE]									
1									PLATE PACKAGE, Input Clutch Thrust
	05013093AA	1	5				DG4		
		1	1				DG4		

DAKOTA (AN)

SERIES	LINE	BODY	ENGINE	TRANSMISSION
L = Dakota (All)	1 = Dakota 2WD	61 = Regular Cab (112 WB)	EPE = 2.5L 4 Cylinder	DGK = 4 Speed Automatic 42RE
	5 = Dakota 4WD	31 = Club Cab (131 WB)	EHC = 3.9L 6 Cylinder	DGT = 4 Speed Automatic 46RE
		84 = Quad Cab (131 WB)	EML = 5.0L 8 Cylinder	DDC = 5 Speed HD Manual
			EVA = 4.7L Magnum V8	DDK = 5 Speed HD Manual
			EP0 = All 2.5L	DG4 = Multispeed Automatic 45RFE
			EH0 = All 3.9L	DG0 = All Automatic Transmissions
			EM0 = All 5.9L	DBB = All Manual Transmissions
			EV0 = All 4.7L	

Figure 45RFE-1330

O/H seal/gasket package		05014221ac
	2&4 clutch package	
	Input clutch package	
	L/R clutch package	
	Sump filter & seal package	
	Cooler filter	
	fill tube seal	
	Frt pmp cover o-ring/seal assy	
	Rotating shaft seal,pmp hsg	
	Adapter seal, 4x4	
	Extension seal,4x2	
	Manual lever seal	
(2)	Speed sensor seal	
	Reaction supt ring seal	
	Rev O/D clutch filter	
(10)	Accumulator ring seal	
(3)	Valve body seal	
	Check valve o-ring	
	Solenoid insulator seal	
	T/C seal	

ITEM	PART NUMBER	QTY	LINE	SERIES	BODY	ENGINE	TRANS	TRIM	DESCRIPTION
1									OVERHAUL PACKAGE, Transmission
	05014221AG	1	5				DG4		
		1	1				DG4		

DAKOTA (AN)

SERIES	LINE	BODY	ENGINE	TRANSMISSION
L = Dakota (All)	1 = Dakota 2WD	61 = Regular Cab (112 WB)	EPE = 2.5L 4 Cylinder	DGK = 4 Speed Automatic 42RE
	5 = Dakota 4WD	31 = Club Cab (131 WB)	EHC = 3.9L 6 Cylinder	DGT = 4 Speed Automatic 46RE
		84 = Quad Cab (131 WB)	EML = 5.0L 8 Cylinder	DDC = 5 Speed HD Manual
			EVA = 4.7L Magnum V8	DDK = 5 Speed HD Manual
			EP0 = All 2.5L	DG4 = Multispeed Automatic 45RFE
			EH0 = All 3.9L	DG0 = All Automatic Transmissions
			EM0 = All 5.9L	DBB = All Manual Transmissions
			EV0 = All 4.7L	

INPUT CLUTCH PACKAGE 05013090aa

	O-ring, large (2.62mm x 79.84 ID,gm)
	O-ring, small (2.62mm x 70.56 ID,red)
(2)	Seal, internal lip
(2)	Ring seal, I-shaft
	O-ring, piston inner (2.62mm x 93.54 ID)
(5)	Plate, clutch separator (1.74mm thk)
(4)	Disc assy, clutch (u/d clutch)
(4)	Disc assy, clutch (o/d clutch)
(3)	PLate, clutch separator (2.21mm thk, O/D)
(2)	Disc assy, clutch (rev clutch)
	Snap ring,tapered, internal butterfly end
	Snap ring, flat (1.5/1.6 thk)
	Snap ring, flat (1.80/1.90 thk)
	Snap ring, flat (2.15/2.25 thk)
	Piston & seal, underdrive
	Piston & seal, underdrive balance

ITEM	PART NUMBER	QTY	LINE	SERIES	BODY	ENGINE	TRANS	TRIM	DESCRIPTION
NOTES:									
[DG4]= Multi- Speed Automatic Transmission[45RFE]									
1									CLUTCH PACKAGE, Automatic Transmission, Input
	05013090AB	1	5				DG4		
		1	1				DG4		

DAKOTA (AN)

SERIES	LINE	BODY	ENGINE	TRANSMISSION
L = Dakota (All)	1 = Dakota 2WD	61 = Regular Cab (112 WB)	EPE = 2.5L 4 Cylinder	DGK = 4 Speed Automatic 42RE
	5 = Dakota 4WD	31 = Club Cab (131 WB)	EHC = 3.9L 6 Cylinder	DGT = 4 Speed Automatic 46RE
		84 = Quad Cab (131 WB)	EML = 5.0L 8 Cylinder	DDC = 5 Speed HD Manual
			EVA = 4.7L Magnum V8	DDK = 5 Speed HD Manual
			EP0 = All 2.5L	DG4 = Multispeed Automatic 45RFE
			EH0 = All 3.9L	DG0 = All Automatic Transmissions
			EM0 = All 5.9L	DBB = All Manual Transmissions
			EV0 = All 4.7L	

SELECTIVE THRUST PLATES

PLANETARY THRUST PLATE PKG 05013092aa

	Thrust plate, planetary	1.62 / 1.75
	Thrust plate, planetary	1.81 / 1.94
	Thrust plate, planetary	1.96 / 2.09
	Thrust plate, planetary	2.11 / 2.24
	Thrust plate, planetary	2.26 / 2.39
	Thrust plate, planetary	2.41 / 2.54
	Thrust plate, planetary	2.56 / 2.69
	Thrust plate, planetary	2.71 / 2.84
	Thrust plate, planetary	2.86 / 2.99
	Thrust plate, planetary	3.01 / 3.14
	Thrust plate, planetary	3.16 / 3.29
	Thrust plate, planetary	3.31 / 3.44
	Thrust plate, planetary	3.46 / 3.59
	Thrust plate, planetary	3.61 / 3.74
	Thrust plate, planetary	3.76 / 3.89
	Thrust plate, planetary	3.91 / 4.04
	Thrust plate, planetary	4.06 / 4.19
	Thrust plate, planetary	4.21 / 4.34
	Thrust plate, planetary	4.36 / 4.49

ITEM	PART NUMBER	QTY	LINE	SERIES	BODY	ENGINE	TRANS	TRIM	DESCRIPTION
NOTES:									
[DG4]= Multi- Speed Automatic Transmission[45RFE]									
1									PLATE PACKAGE, Planetary Thrust
	05013092AA	1	5				DG4		
		1	1				DG4		

DAKOTA (AN)

SERIES	LINE	BODY	ENGINE	TRANSMISSION
L = Dakota (All)	1 = Dakota 2WD	61 = Regular Cab (112 WB)	EPE = 2.5L 4 Cylinder	DGK = 4 Speed Automatic 42RE
	5 = Dakota 4WD	31 = Club Cab (131 WB)	EHC = 3.9L 6 Cylinder	DGT = 4 Speed Automatic 46RE
		84 = Quad Cab (131 WB)	EML = 5.0L 8 Cylinder	DDC = 5 Speed HD Manual
			EVA = 4.7L Magnum V8	DDK = 5 Speed HD Manual
			EP0 = All 2.5L	DG4 = Multispeed Automatic 45RFE
			EH0 = All 3.9L	DG0 = All Automatic Transmissions
			EM0 = All 5.9L	DBB = All Manual Transmissions
			EV0 = All 4.7L	

2&4 CLUTCH PACKAGE 05013087aa

(2)	Disc assy, clutch (2nd clutch)
(2)	Plate, clutch separator
	D-ring, external (2nd outer)
	D-ring, internal (2nd inner)
	D-ring, internal (4th outer)
	D-ring, internal (4th inner)
(3)	Plate, clutch separator (4th clutch)
(3)	Disc assy, clutch (4th clutch)
	Snap ring (4th, 1.74/1.84 thk)
	Snap ring (4th, 2.15/2.25 thk)
	Snap ring (4th, 2.56/2.66 thk)

ITEM	PART NUMBER	QTY	LINE	SERIES	BODY	ENGINE	TRANS	TRIM	DESCRIPTION
NOTES: [DG4]= Multi- Speed Automatic Transmission[45RFE]									
1									CLUTCH PACKAGE, Automatic Transmission, 2/4
	05013087AB	1	5				DG4		
		1	1				DG4		

DAKOTA (AN)

SERIES	LINE	BODY	ENGINE	TRANSMISSION
L = Dakota (All)	1 = Dakota 2WD	61 = Regular Cab (112 WB)	EPE = 2.5L 4 Cylinder	DGK = 4 Speed Automatic 42RE
	5 = Dakota 4WD	31 = Club Cab (131 WB)	EHC = 3.9L 6 Cylinder	DGT = 4 Speed Automatic 46RE
		84 = Quad Cab (131 WB)	EML = 5.0L 8 Cylinder	DDC = 5 Speed HD Manual
			EVA = 4.7L Magnum V8	DDK = 5 Speed HD Manual
			EP0 = All 2.5L	DG4 = Multispeed Automatic 45RFE
			EH0 = All 3.9L	DG0 = All Automatic Transmissions
			EM0 = All 5.9L	DBB = All Manual Transmissions
			EV0 = All 4.7L	

Group - 46RE

Automatic Transmission 4 Speed

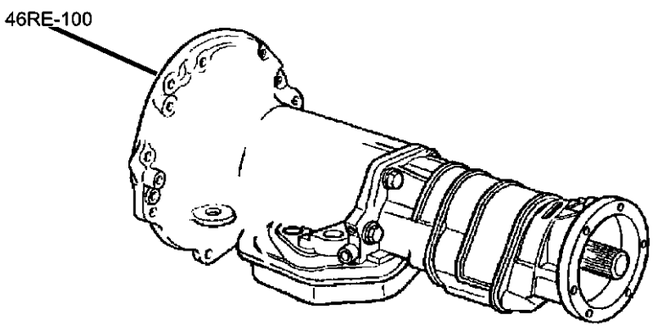

46RE-100 Transmission Assembly 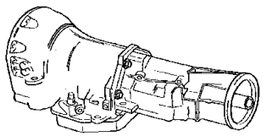	**46RE-1000** Overdrive Gear Train 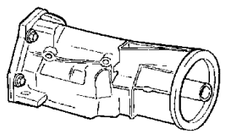	**46RE-1200** Gearshift Controls 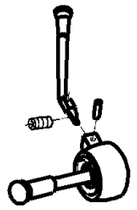	**46RE-200** Case and Extension 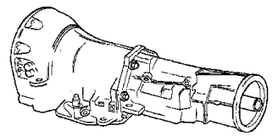
46RE-300 Oil Pump 	**46RE-400** Gear Train 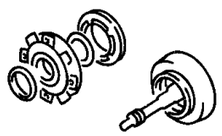	**46RE-500** Bands, Reverse and Kickdown 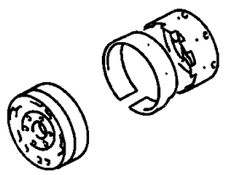	**46RE-700** Valve Body 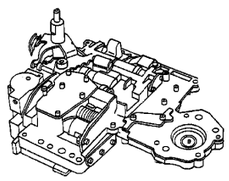

Group - 46RE Automatic Transmission 4 Speed

Illustration Title — Group-Fig. No.

Transmission Assembly
Transmission [DGT] ..... Fig. 46RE - 110

Case and Extension
Case & Related Parts [DGT] ..... Fig. 46RE - 210
Extension [DGT] ..... Fig. 46RE - 220

Oil Pump
Oil Pump [DGT] ..... Fig. 46RE - 325

Gear Train
Clutch Front & Rear [DGT] ..... Fig. 46RE - 410
Intermedate Shaft [DGT] ..... Fig. 46RE - 420
Output Shaft [DGT] ..... Fig. 46RE - 430

Bands, Reverse and Kickdown
Bands [DGT] ..... Fig. 46RE - 510

Valve Body
Valve Body [DGT] ..... Fig. 46RE - 710
Servo [DGT] ..... Fig. 46RE - 720
Parking Sprag [DGT] ..... Fig. 46RE - 730

Overdrive Gear Train
Clutch [DGT] ..... Fig. 46RE - 1010

Gearshift Controls
Gearshift Controls [DGT] ..... Fig. 46RE - 1210

Transmission [DGT]
Figure 46RE-110

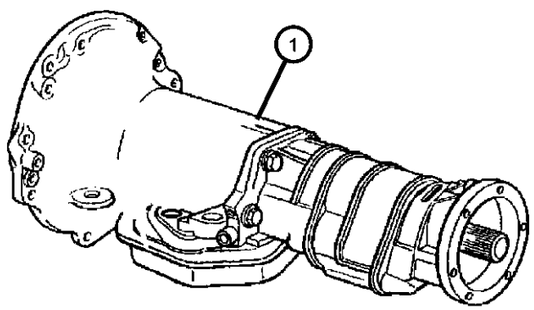

ITEM	PART NUMBER	QTY	LINE	SERIES	BODY	ENGINE	TRANS	TRIM	DESCRIPTION
NOTE:									
Sales Codes:									
[DGT]=46RE 4 Speed Automatic Transmissions									
1									TRANSMISSION PACKAGE
	05080959AA	1	5				DGT		With Stamp # [52854067AA - Package contains 52854067AA Transmission, K4736591 Torque Converter, K1949765 Screw]
	05013457AA								Mopar Automatic Transmission Fluid Quart
	05013458AA								Mopar Automatic Transmission Fluid Gallon
	05083387AA	1	1				DGT		With Stamp # [52854068AA - Package contains 52854068AA Transmission, K4736591 Torque Converter, K1949765 Screw]
	05013457AA								Mopar Automatic Transmission Fluid Quart
	05013458AA								Mopar Automatic Transmission Fluid Gallon
-2									OVERDRIVE
	52118155	1	5				DGT		
	52119428AB	1	1				DGT		

DAKOTA (AN)

SERIES	LINE	BODY	ENGINE	TRANSMISSION
L = Dakota (All)	1 = Dakota 2WD	61 = Regular Cab (112 WB)	EPE = 2.5L 4 Cylinder	DGK = 4 Speed Automatic 42RE
	5 = Dakota 4WD	31 = Club Cab (131 WB)	EHC = 3.9L 6 Cylinder	DGT = 4 Speed Automatic 46RE
		84 = Quad Cab (131 WB)	EML = 5.0L 8 Cylinder	DDC = 5 Speed HD Manual
			EVA = 4.7L Magnum V8	DDK = 5 Speed HD Manual
			EP0 = All 2.5L	DG4 = Multispeed Automatic 45RFE
			EH0 = All 3.9L	DG0 = All Automatic Transmissions
			EM0 = All 5.9L	DBB = All Manual Transmissions
			EV0 = All 4.7L	

Case & Related Parts [DGT]
Figure 46RE-210

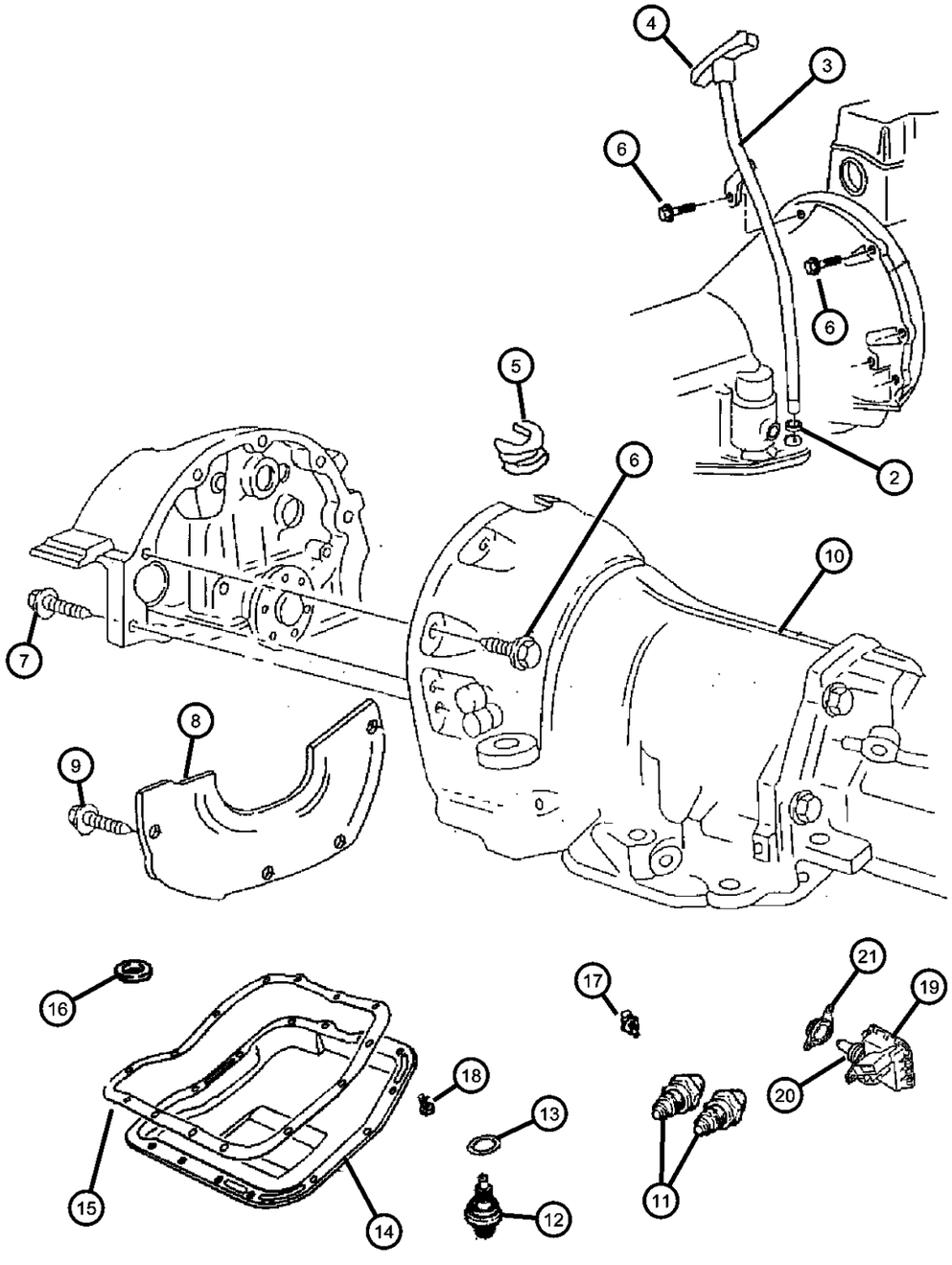

ITEM	PART NUMBER	QTY	LINE	SERIES	BODY	ENGINE	TRANS	TRIM	DESCRIPTION
NOTES:									
Sales Codes:									
[DGT]=46RE 4 Speed Automatic Transmissions									
[EH0]=All 3.9L V-6 Engines									
[EM0]=All 5.9L V-8 Engines									
[EV0]=All 4.7L V-8 Engines									
-1									SEAL AND GASKET PACKAGE, Transmission, Also Used In The AN1
	04863884AI	1	5				DGT		
		1	1				DGT		
2	52118629AB	1					DGT		SEAL, Oil Filler Tube
3	52118619AD	1					DGT		TUBE, Oil Filler
4	52107769AB	1					DGK, DGT		INDICATOR, Transmission Fluid Level
5	52117709	1				EH0, EM0			GROMMET, Timing Probe
6	06022266	4					DG0		SCREW, Hex Head, .375-16x1.5
7	06036385AA	2				EM0, EV0	DG0		SCREW AND WASHER, Hex Head, .437-14x2.00
8	52117501AB	1					DGT		COVER, Transmission Dust, Stepped
9	06023092	2					DGK, DGT		SCREW AND WASHER, Hex Head, .25-20x.50
10									CASE, Transmission
	52118757AB	1	5				DGT		
		1	1				DGT		
11									NUT, Inverted Flare, .62-18
	06033879	2	5				DGT		
		2	1				DGT		
12									SENSOR, Transmission Output Speed
	04800879	1	5				DGT		
		1	1				DGT		
13									O RING, Trans Speed Sensor
	06501658AB	1	5				DGT		
		1	1				DGT		
14	52118780AC	1	5				DGT		PAN, Transmission Oil
15									GASKET, Oil Pan

DAKOTA (AN)

SERIES	LINE	BODY	ENGINE	TRANSMISSION
L = Dakota (All)	1 = Dakota 2WD	61 = Regular Cab (112 WB)	EPE = 2.5L 4 Cylinder	DGK = 4 Speed Automatic 42RE
	5 = Dakota 4WD	31 = Club Cab (131 WB)	EHC = 3.9L 6 Cylinder	DGT = 4 Speed Automatic 46RE
		84 = Quad Cab (131 WB)	EML = 5.0L 8 Cylinder	DDC = 5 Speed HD Manual
			EVA = 4.7L Magnum V8	DDK = 5 Speed HD Manual
			EP0 = All 2.5L	DG4 = Multispeed Automatic 45RFE
			EH0 = All 3.9L	DG0 = All Automatic Transmissions
			EM0 = All 5.9L	DBB = All Manual Transmissions
			EV0 = All 4.7L	

Case & Related Parts [DGT]
Figure 46RE-210

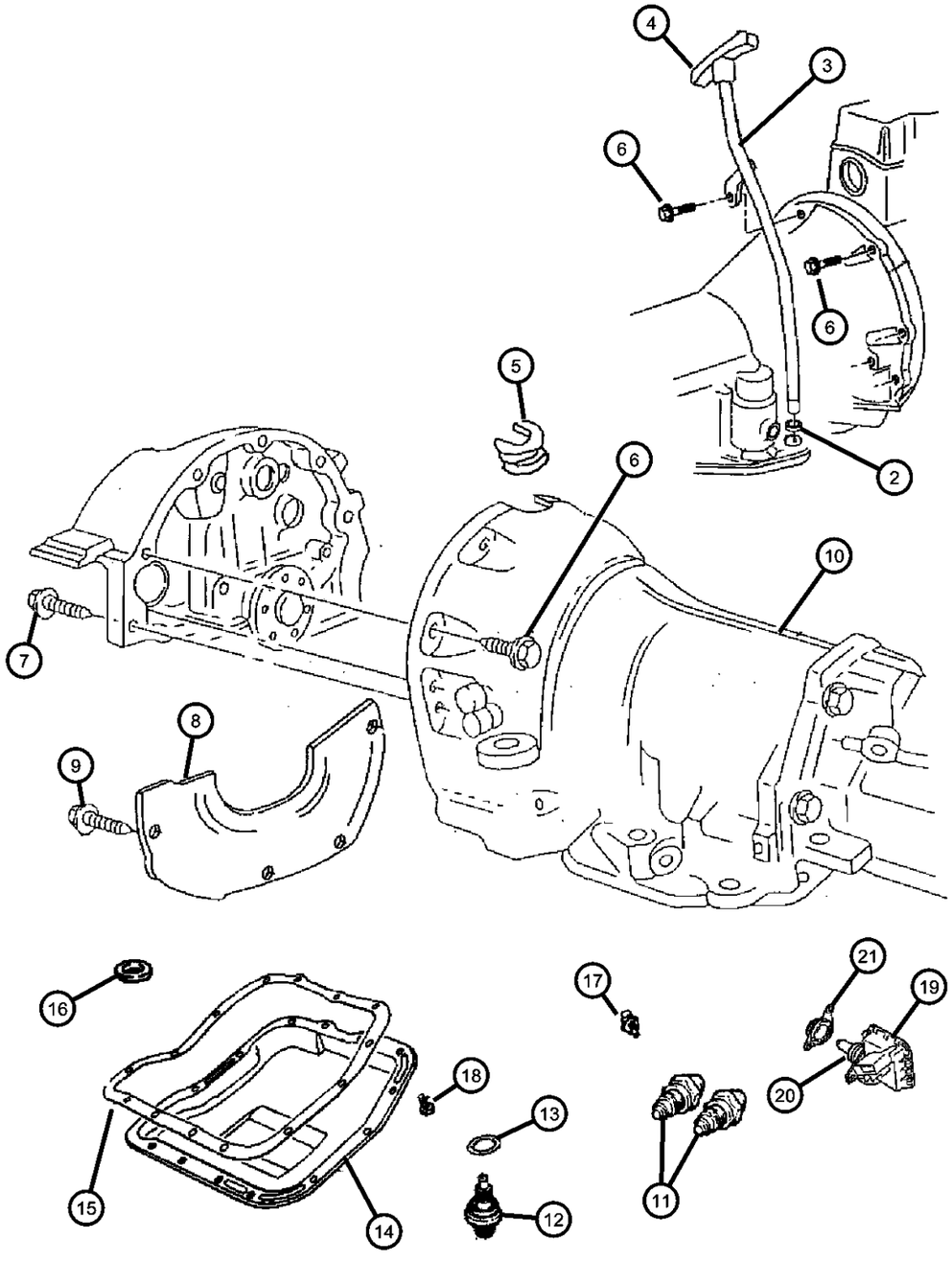

ITEM	PART NUMBER	QTY	LINE	SERIES	BODY	ENGINE	TRANS	TRIM	DESCRIPTION
	02464324AC	1	5				DGT		
		1	1				DGT		
16									MAGNET, Transmission
	03681601	1	5				DGT		
		1	1				DGT		
17									SCREW
	06036115AA	1	1				DGT		
		1	5				DGT		
18	04723548	1	5				DGT		SCREW AND WASHER, Hex Head, .312-18x.625
19									SWITCH, Neutral, Safety, Back Up
	56045489AA	1	5				DGT		
		1	1				DGT		
20	02408143	1	1				DGK		WASHER, Switch
21									BRACKET
	56049014AA	1	5				DGT		
		1	1				DGT		

DAKOTA (AN)

SERIES	LINE	BODY	ENGINE	TRANSMISSION
L = Dakota (All)	1 = Dakota 2WD	61 = Regular Cab (112 WB)	EPE = 2.5L 4 Cylinder	DGK = 4 Speed Automatic 42RE
	5 = Dakota 4WD	31 = Club Cab (131 WB)	EHC = 3.9L 6 Cylinder	DGT = 4 Speed Automatic 46RE
		84 = Quad Cab (131 WB)	EML = 5.0L 8 Cylinder	DDC = 5 Speed HD Manual
			EVA = 4.7L Magnum V8	DDK = 5 Speed HD Manual
			EP0 = All 2.5L	DG4 = Multispeed Automatic 45RFE
			EH0 = All 3.9L	DG0 = All Automatic Transmissions
			EM0 = All 5.9L	DBB = All Manual Transmissions
			EV0 = All 4.7L	

Extension [DGT]
Figure 46RE-220

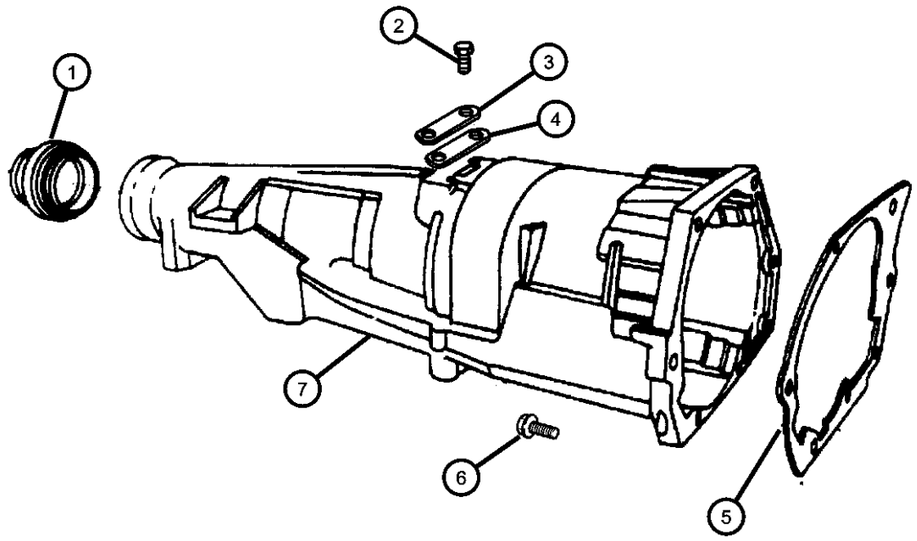

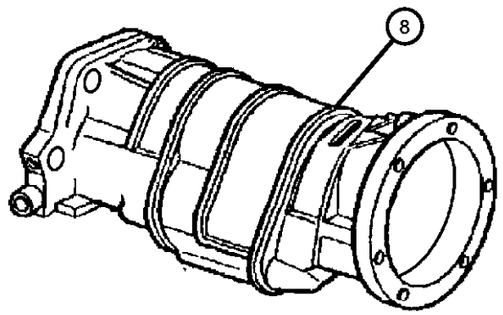

ITEM	PART NUMBER	QTY	LINE	SERIES	BODY	ENGINE	TRANS	TRIM	DESCRIPTION
NOTE:									
Sales Codes:									
[DGT]=46 RE 4 Speed Automatic Transmission									
1	04531216AB	1	1				DGT		SEAL, Output Shaft
2	04531216AB	1							SCREW, 1/4-20 x 5/8“, (NOT SERVICED)
3									COVER, Transmission Converter
	02466957	1	5				DGT		
		1	1				DGT		
4									GASKET, Transmission
	02801398	1	5				DGT		
		1	1				DGT		
5									GASKET, Overdrive Piston Retainer
	04471565	1	5				DGT		
		1	1				DGT		
6									SCREW, Hex Flange Head, .375-16x1.38
	06036046AA	7	5				DGT		
		7	1				DGT		
7	05003231AA	1	1				DGK		CASE, Transmission Rear
8	04797342	1	5				DGT		ADAPTER, Transfer Case
-9	04269956AB	1	5				DGK		SEAL, Adapter

DAKOTA (AN)

SERIES	LINE	BODY	ENGINE	TRANSMISSION
L = Dakota (All)	1 = Dakota 2WD	61 = Regular Cab (112 WB)	EPE = 2.5L 4 Cylinder	DGK = 4 Speed Automatic 42RE
	5 = Dakota 4WD	31 = Club Cab (131 WB)	EHC = 3.9L 6 Cylinder	DGT = 4 Speed Automatic 46RE
		84 = Quad Cab (131 WB)	EML = 5.0L 8 Cylinder	DDC = 5 Speed HD Manual
			EVA = 4.7L Magnum V8	DDK = 5 Speed HD Manual
			EP0 = All 2.5L	DG4 = Multispeed Automatic 45RFE
			EH0 = All 3.9L	DG0 = All Automatic Transmissions
			EM0 = All 5.9L	DBB = All Manual Transmissions
			EV0 = All 4.7L	

AR = use ase required - = Non illustrrated part

Oil Pump [DGT]
Figure 46RE-325

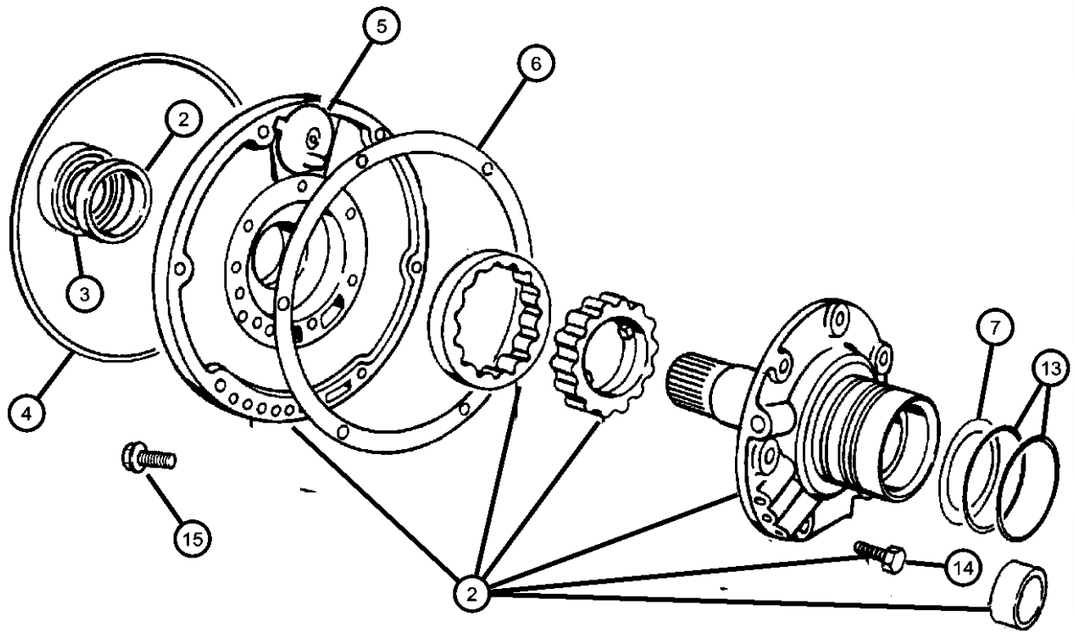

ITEM	PART NUMBER	QTY	LINE	SERIES	BODY	ENGINE	TRANS	TRIM	DESCRIPTION
NOTES:									
Sales Codes:									
[DGT]=46RE 4 Speed Automatic Transmission									
-1									SEAL AND GASKET PACKAGE, Transmission
	04863884AI	1	5				DGT		
		1	1				DGT		
2									PUMP PACKAGE, Transmission
	04796467AB	1	5				DGT		
		1	1				DGT		
3									SEAL, Impeller Hub, 57.25mm OD
	04531225	1	5				DGT		
		1	1				DGT		
4									SEAL, Front Pump Housing
	01942021	1	5				DGT		
		1	1				DGT		
5									BAFFLE PACKAGE, Pump
	03420087	1	5				DGT		
		1	1				DGT		
6									GASKET, Transmission Oil Pump
	04028377	1	5				DGT		
		1	1				DGT		
7									THRUST WASHER, Front Clutch
	04617161	1	5				DGT		
		1	1				DGT		
-8									THRUST WASHER, Front Clutch, Pink .085
	04617162	1	5				DGT		
		1	1				DGT		
-9									THRUST WASHER, Front Clutch, Yellow .103
	04617163	1	5				DGT		
		1	1				DGT		
-10									THRUST WASHER, Front Clutch, Orange .121
	04617164	1	5				DGT		

DAKOTA (AN)

SERIES	LINE	BODY	ENGINE	TRANSMISSION
L = Dakota (All)	1 = Dakota 2WD	61 = Regular Cab (112 WB)	EPE = 2.5L 4 Cylinder	DGK = 4 Speed Automatic 42RE
	5 = Dakota 4WD	31 = Club Cab (131 WB)	EHC = 3.9L 6 Cylinder	DGT = 4 Speed Automatic 46RE
		84 = Quad Cab (131 WB)	EML = 5.0L 8 Cylinder	DDC = 5 Speed HD Manual
			EVA = 4.7L Magnum V8	DDK = 5 Speed HD Manual
			EP0 = All 2.5L	DG4 = Multispeed Automatic 45RFE
			EH0 = All 3.9L	DG0 = All Automatic Transmissions
			EM0 = All 5.9L	DBB = All Manual Transmissions
			EV0 = All 4.7L	

Oil Pump [DGT]
Figure 46RE-325

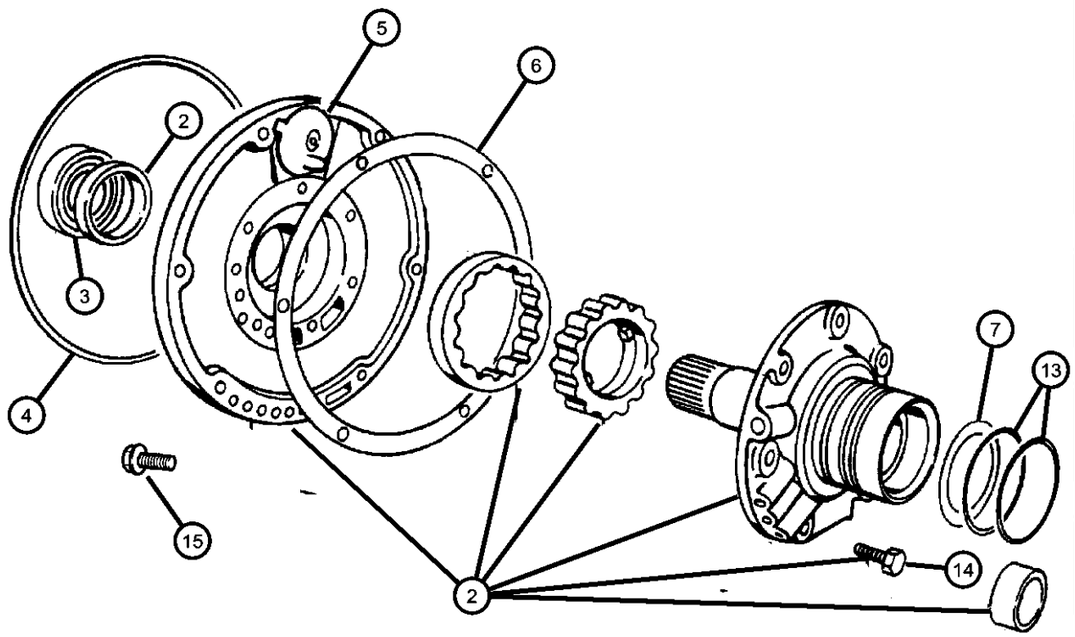

ITEM	PART NUMBER	QTY	LINE	SERIES	BODY	ENGINE	TRANS	TRIM	DESCRIPTION
		1	1				DGT		
-11									THRUST WASHER, Front Clutch, Blue .139"
	04617165	1	5				DGT		
		1	1				DGT		
-12									THRUST WASHER, Front Clutch, Black .157
	04617166	1	5				DGT		
		1	1				DGT		
13									SEAL, Reaction Shaft
	03743689	2	5				DGT		
		2	1				DGT		
14									SCREW, Hex Head, .312-18x.687
	00179815	6	5				DGT		
		6	1				DGT		
15									SCREW AND WASHER, Hex Flange Head, .312-18x1.375
	06023943	7	5				DGT		
		7	1				DGT		

DAKOTA (AN)

SERIES	LINE	BODY	ENGINE	TRANSMISSION
L = Dakota (All)	1 = Dakota 2WD	61 = Regular Cab (112 WB)	EPE = 2.5L 4 Cylinder	DGK = 4 Speed Automatic 42RE
	5 = Dakota 4WD	31 = Club Cab (131 WB)	EHC = 3.9L 6 Cylinder	DGT = 4 Speed Automatic 46RE
		84 = Quad Cab (131 WB)	EML = 5.0L 8 Cylinder	DDC = 5 Speed HD Manual
			EVA = 4.7L Magnum V8	DDK = 5 Speed HD Manual
			EP0 = All 2.5L	DG4 = Multispeed Automatic 45RFE
			EH0 = All 3.9L	DG0 = All Automatic Transmissions
			EM0 = All 5.9L	DBB = All Manual Transmissions
			EV0 = All 4.7L	

Clutch Front & Rear [DGT]
Figure 46RE-410

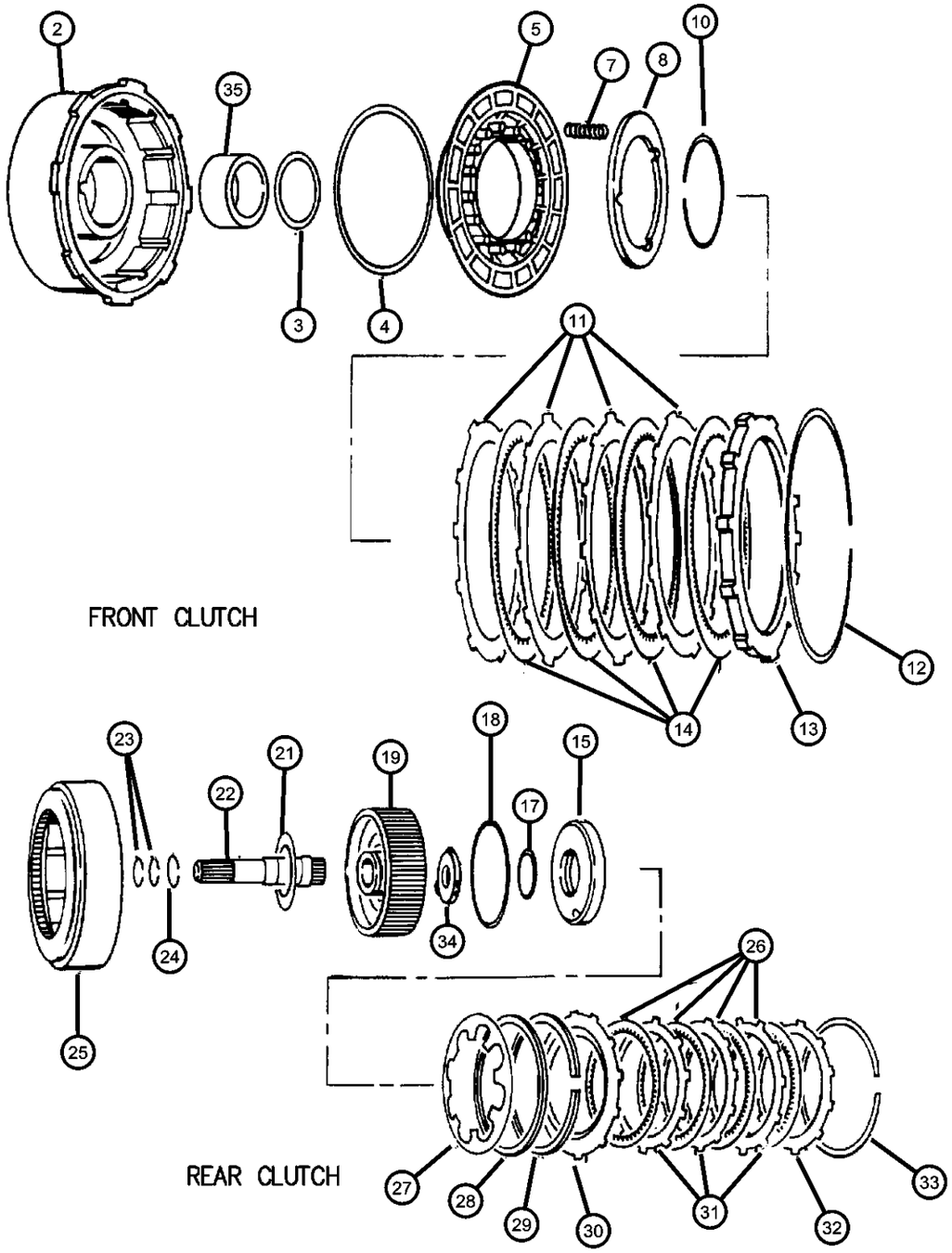

ITEM	PART NUMBER	QTY	LINE	SERIES	BODY	ENGINE	TRANS	TRIM	DESCRIPTION
NOTE:									
Sales Codes:									
[DGT]=46RE 4 Speed Automatic Transmissions									
-1	04637078AB	1	5				DGT		SEAL PACKAGE, Transmission Clutch, [4637078AB Also For AN1]
2									RETAINER, Clutch
	04058437AB	1	5				DGT		
		1	1				DGT		
3									SEAL, Front Clutch Piston
	03410226	1	5				DGT		
		1	1				DGT		
4									SEAL, Front Piston Clutch
	52852924AA	1	5				DGT		
		1	1				DGT		
5									PISTON, Clutch
	02464651AB	1	5				DGT		
		1	1				DGT		
-6									CHECK BALL, Dia-.187
	00147483	1	5				DGT		
		1	1				DGT		
7									SPRING, Front Clutch
	04617205	9	5				DGT		
		9	1				DGT		
8									RETAINER, Transmission
	02801949	1	5				DGT		
		1	1				DGT		
-9									CHECK BALL, Dia-.187
	00147483	1	5				DGT		
		1	1				DGT		
10									SNAP RING
	02124824	1	5				DGT		
		1	1				DGT		
11									PLATE, Clutch Separator
	02124826AB	3	5				DGT		

DAKOTA (AN)

SERIES	LINE	BODY	ENGINE	TRANSMISSION
L = Dakota (All)	1 = Dakota 2WD	61 = Regular Cab (112 WB)	EPE = 2.5L 4 Cylinder	DGK = 4 Speed Automatic 42RE
	5 = Dakota 4WD	31 = Club Cab (131 WB)	EHC = 3.9L 6 Cylinder	DGT = 4 Speed Automatic 46RE
		84 = Quad Cab (131 WB)	EML = 5.0L 8 Cylinder	DDC = 5 Speed HD Manual
			EVA = 4.7L Magnum V8	DDK = 5 Speed HD Manual
			EP0 = All 2.5L	DG4 = Multispeed Automatic 45RFE
			EH0 = All 3.9L	DG0 = All Automatic Transmissions
			EM0 = All 5.9L	DBB = All Manual Transmissions
			EV0 = All 4.7L	

Clutch Front & Rear [DGT]
Figure 46RE-410

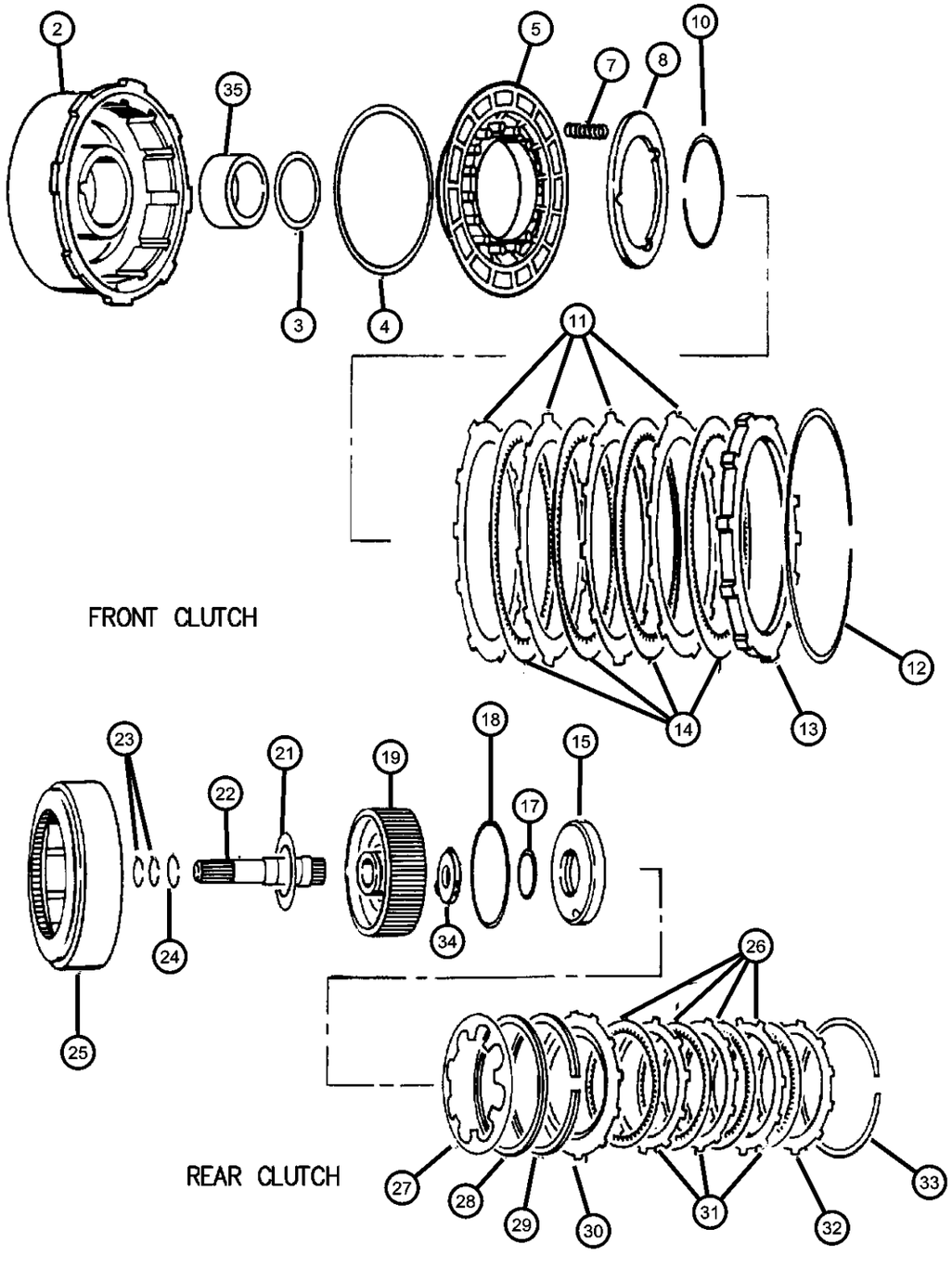

ITEM	PART NUMBER	QTY	LINE	SERIES	BODY	ENGINE	TRANS	TRIM	DESCRIPTION
		3	1				DGT		
12									SNAP RING
	03410570	1	5				DGT		
		1	1				DGT		
13									PLATE, Transmission Clutch Reaction
	04617567	1	5				DGT		
		1	1				DGT		
14									DISC, Direct Clutch
	04617201AB	3	5				DGT		
		3	1				DGT		
15									PISTON, Clutch
	03743624AB	1	5				DGT		
		1	1				DGT		
-16									CHECK BALL, Dia-.187
	00147483	1	5				DGT		
		1	1				DGT		
17									SEAL, Rear Clutch Piston
	01942054	1	5				DGT		
		1	1				DGT		
18									SEAL, Rear Clutch Piston
	02124835	1	5				DGT		
		1	1				DGT		
19									RETAINER, Transmission
	04617855	1	5				DGT		
		1	1				DGT		
-20									SEAL, Rear Clutch Retainer
	04058443	1	5				DGT		
		1	1				DGT		
21									THRUST WASHER, Front Clutch
	04617161	1	5				DGT		Rear
		1	1				DGT		Rear
22									INPUT SHAFT, Transmission

DAKOTA (AN)

SERIES	LINE	BODY	ENGINE	TRANSMISSION
L = Dakota (All)	1 = Dakota 2WD	61 = Regular Cab (112 WB)	EPE = 2.5L 4 Cylinder	DGK = 4 Speed Automatic 42RE
	5 = Dakota 4WD	31 = Club Cab (131 WB)	EHC = 3.9L 6 Cylinder	DGT = 4 Speed Automatic 46RE
		84 = Quad Cab (131 WB)	EML = 5.0L 8 Cylinder	DDC = 5 Speed HD Manual
			EVA = 4.7L Magnum V8	DDK = 5 Speed HD Manual
			EP0 = All 2.5L	DG4 = Multispeed Automatic 45RFE
			EH0 = All 3.9L	DG0 = All Automatic Transmissions
			EM0 = All 5.9L	DBB = All Manual Transmissions
			EV0 = All 4.7L	

AR = use ase required - = Non illustrrated part

Clutch Front & Rear [DGT]
Figure 46RE-410

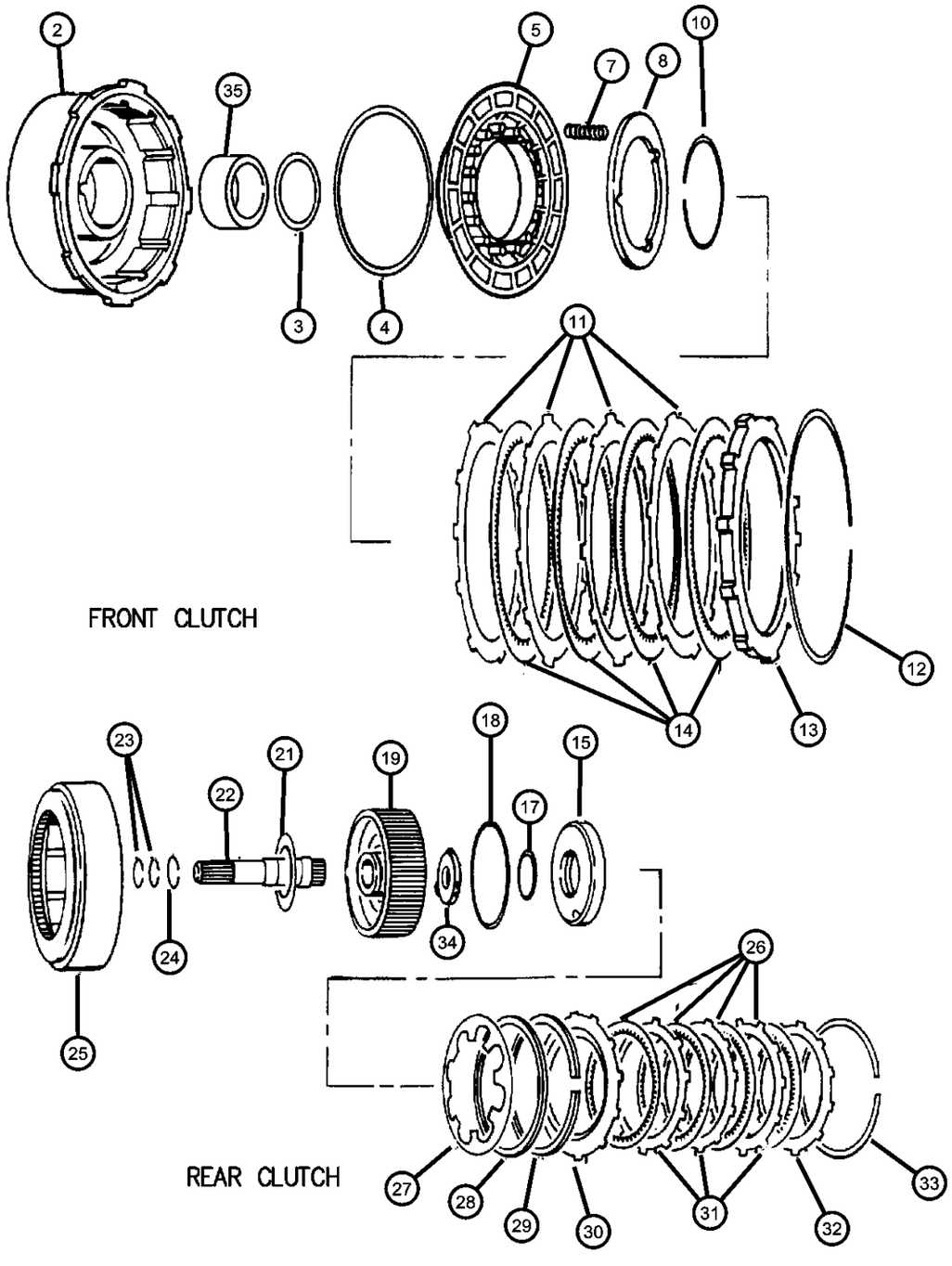

ITEM	PART NUMBER	QTY	LINE	SERIES	BODY	ENGINE	TRANS	TRIM	DESCRIPTION
	04617396	1	5				DGT		
		1	1				DGT		
23									SEAL, Input Shaft
	04617418AB	1	5				DGT		
		1	1				DGT		
24									SNAP RING
	02124872	1	5				DGT		
		1	1				DGT		
25									RETAINER, Rear Clutch
	03743622	1	5				DGT		
		1	1				DGT		
26									DISC, Clutch
	02801992AB	4	5				DGT		
		4	1				DGT		
27									SPRING, Rear Clutch Piston
	03743621AB	1	5				DGT		
		1	1				DGT		
28									SPACER, Rear Clutch Piston
	03515077	1	5				DGT		
		1	1				DGT		
29									SPRING, Rear Clutch
	02466806	1	5				DGT		
		1	1				DGT		
30									PLATE, Clutch Pressure
	02466803	1	5				DGT		
		1	1				DGT		
31									PLATE, Clutch Separator
	52118812AA	3	5				DGT		
		3	1				DGT		
32									PLATE, Transmission Clutch Reaction
	04617567	1	5				DGT		Rear
		1	1				DGT		Rear

DAKOTA (AN)

SERIES	LINE	BODY	ENGINE	TRANSMISSION
L = Dakota (All)	1 = Dakota 2WD	61 = Regular Cab (112 WB)	EPE = 2.5L 4 Cylinder	DGK = 4 Speed Automatic 42RE
	5 = Dakota 4WD	31 = Club Cab (131 WB)	EHC = 3.9L 6 Cylinder	DGT = 4 Speed Automatic 46RE
		84 = Quad Cab (131 WB)	EML = 5.0L 8 Cylinder	DDC = 5 Speed HD Manual
			EVA = 4.7L Magnum V8	DDK = 5 Speed HD Manual
			EP0 = All 2.5L	DG4 = Multispeed Automatic 45RFE
			EH0 = All 3.9L	DG0 = All Automatic Transmissions
			EM0 = All 5.9L	DBB = All Manual Transmissions
			EV0 = All 4.7L	

AR = use ase required - = Non illustrrated part

Clutch Front & Rear [DGT]
Figure 46RE-410

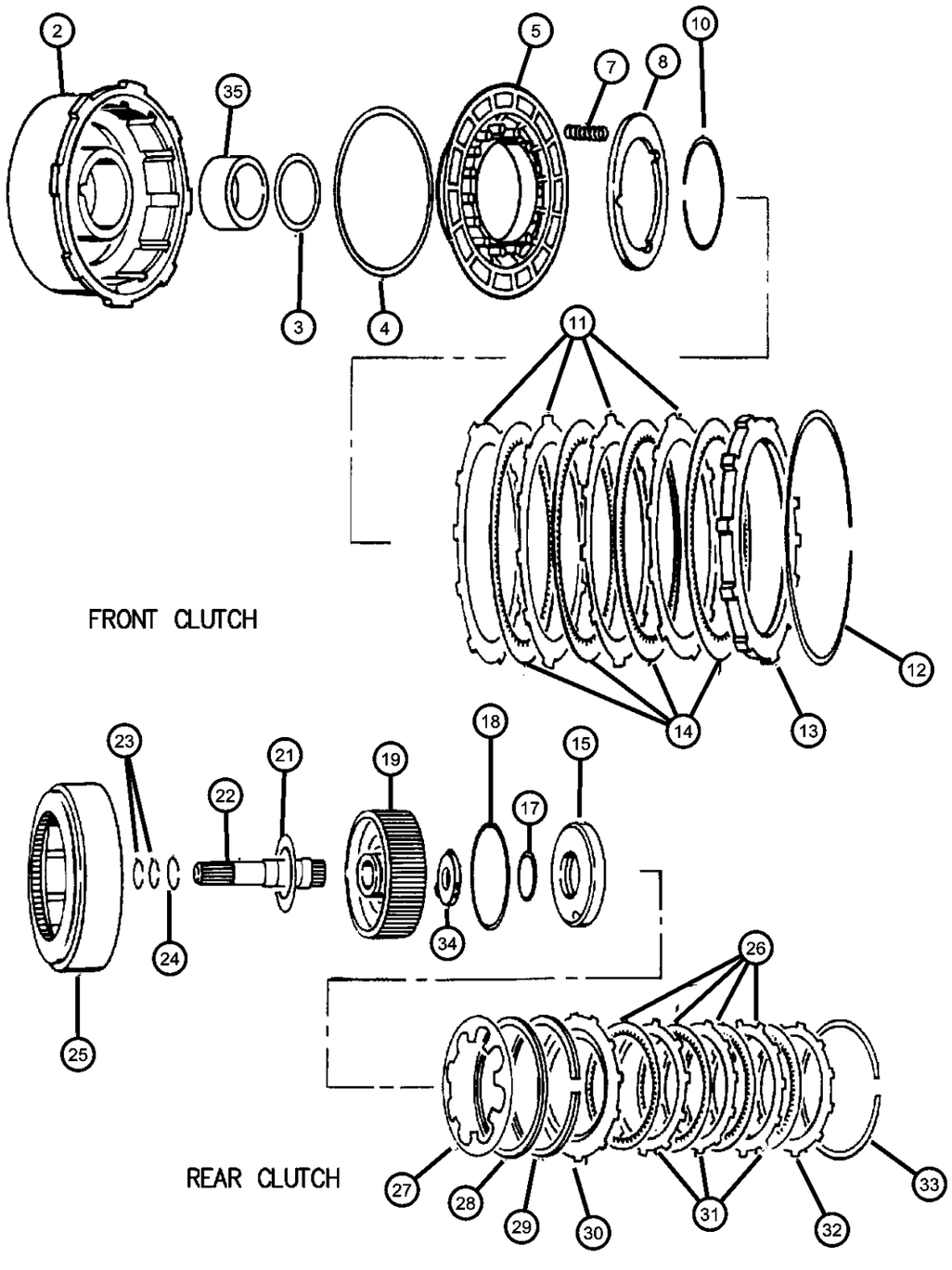

ITEM	PART NUMBER	QTY	LINE	SERIES	BODY	ENGINE	TRANS	TRIM	DESCRIPTION
33									SNAP RING
	01942063AB	1	5				DGT		
		1	1				DGT		
34									THRUST WASHER, Output Shaft, Red .068
	04505186	1	5				DGT		
		1	1				DGT		
35									BUSHING, Front Clutch
	04058647	1	5				DGT		
		1	1				DGT		

DAKOTA (AN)

SERIES	LINE	BODY	ENGINE	TRANSMISSION
L = Dakota (All)	1 = Dakota 2WD	61 = Regular Cab (112 WB)	EPE = 2.5L 4 Cylinder	DGK = 4 Speed Automatic 42RE
	5 = Dakota 4WD	31 = Club Cab (131 WB)	EHC = 3.9L 6 Cylinder	DGT = 4 Speed Automatic 46RE
		84 = Quad Cab (131 WB)	EML = 5.0L 8 Cylinder	DDC = 5 Speed HD Manual
			EVA = 4.7L Magnum V8	DDK = 5 Speed HD Manual
			EP0 = All 2.5L	DG4 = Multispeed Automatic 45RFE
			EH0 = All 3.9L	DG0 = All Automatic Transmissions
			EM0 = All 5.9L	DBB = All Manual Transmissions
			EV0 = All 4.7L	

AR = use ase required - = Non illustrrated part

Intermedate Shaft [DGT]
Figure 46RE-420

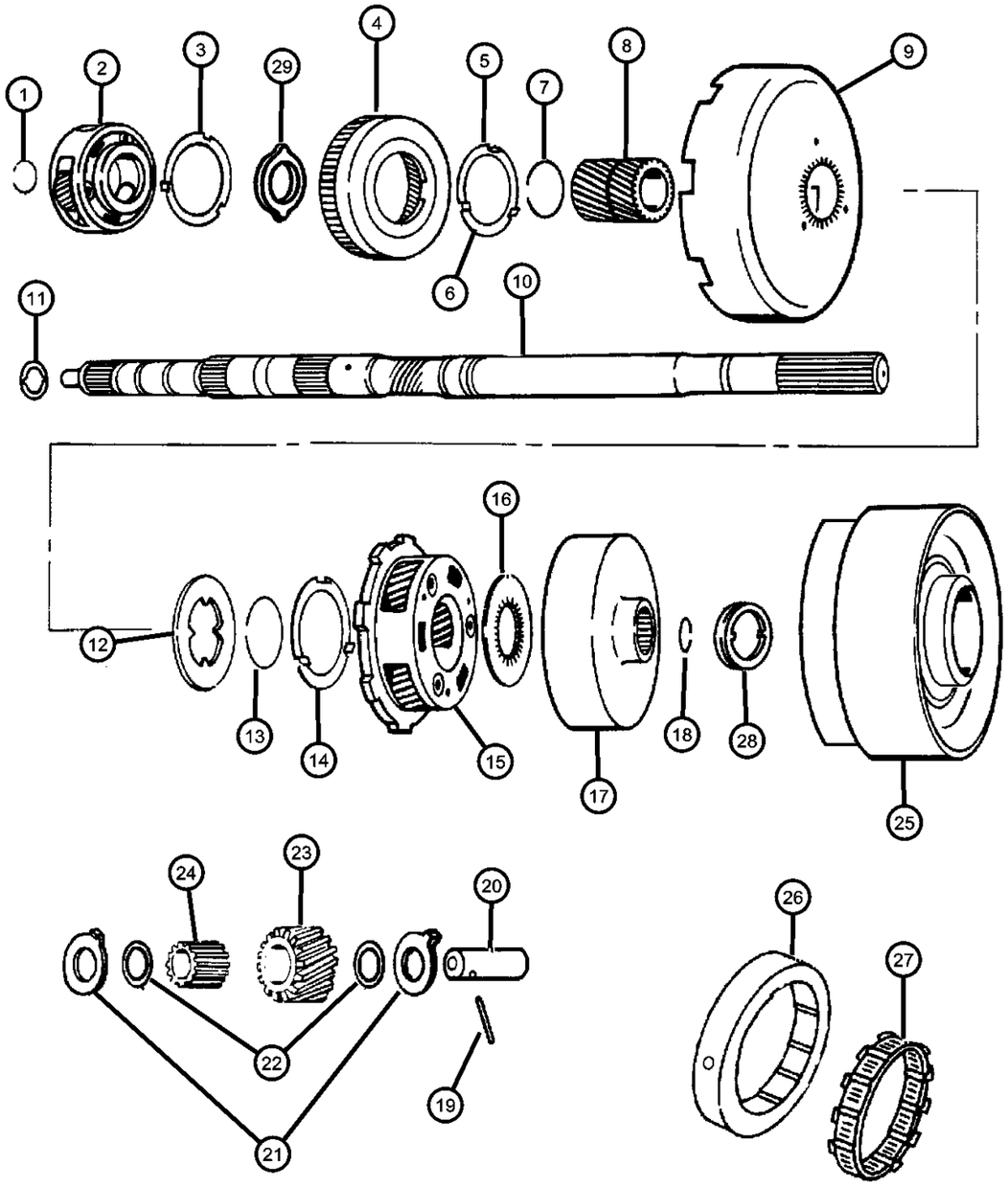

FRONT & REAR PLANET PINION CARRIER GEARS

ITEM	PART NUMBER	QTY	LINE	SERIES	BODY	ENGINE	TRANS	TRIM	DESCRIPTION
NOTE:									
Sales Codes:									
[DGT]=46 RE 4 Speed Automatic Transmissions									
1									SNAP RING, 1.108 Free Diameter
	06024312	1	5				DGT		
		1	1				DGT		
2									CARRIER, Planetary Pinion
	52118693	1	5				DGT		
		1	1				DGT		
3									THRUST WASHER, Planetary Carrier
	02801060	1	5				DGT		
		1	1				DGT		
4									GEAR, Front Annulus
	02892656	1	5				DGT		
		1	1				DGT		
5									THRUST WASHER, Planetary Carrier, 4 Tabs
	04617888	1	5				DGT		
		1	1				DGT		
6									WASHER, 6 Tabs
	04618000	1	5				DGT		
		1	1				DGT		
7									SNAP RING, Sun Gear
	01736521	1	5				DGT		
		1	1				DGT		
8									GEAR, Sun
	02801311	1	5				DGT		
		1	1				DGT		
9									SHELL, Sun Gear
	04617978	1	5				DGT		
		1	1				DGT		
10									INTERMEDIATE SHAFT, Transmission
	04617611	1	5				DGT		

DAKOTA (AN)

SERIES	LINE	BODY	ENGINE	TRANSMISSION
L = Dakota (All)	1 = Dakota 2WD	61 = Regular Cab (112 WB)	EPE = 2.5L 4 Cylinder	DGK = 4 Speed Automatic 42RE
	5 = Dakota 4WD	31 = Club Cab (131 WB)	EHC = 3.9L 6 Cylinder	DGT = 4 Speed Automatic 46RE
		84 = Quad Cab (131 WB)	EML = 5.0L 8 Cylinder	DDC = 5 Speed HD Manual
			EVA = 4.7L Magnum V8	DDK = 5 Speed HD Manual
			EP0 = All 2.5L	DG4 = Multispeed Automatic 45RFE
			EH0 = All 3.9L	DG0 = All Automatic Transmissions
			EM0 = All 5.9L	DBB = All Manual Transmissions
			EV0 = All 4.7L	

AR = use ase required - = Non illustrrated part

Intermedate Shaft [DGT]
Figure 46RE-420

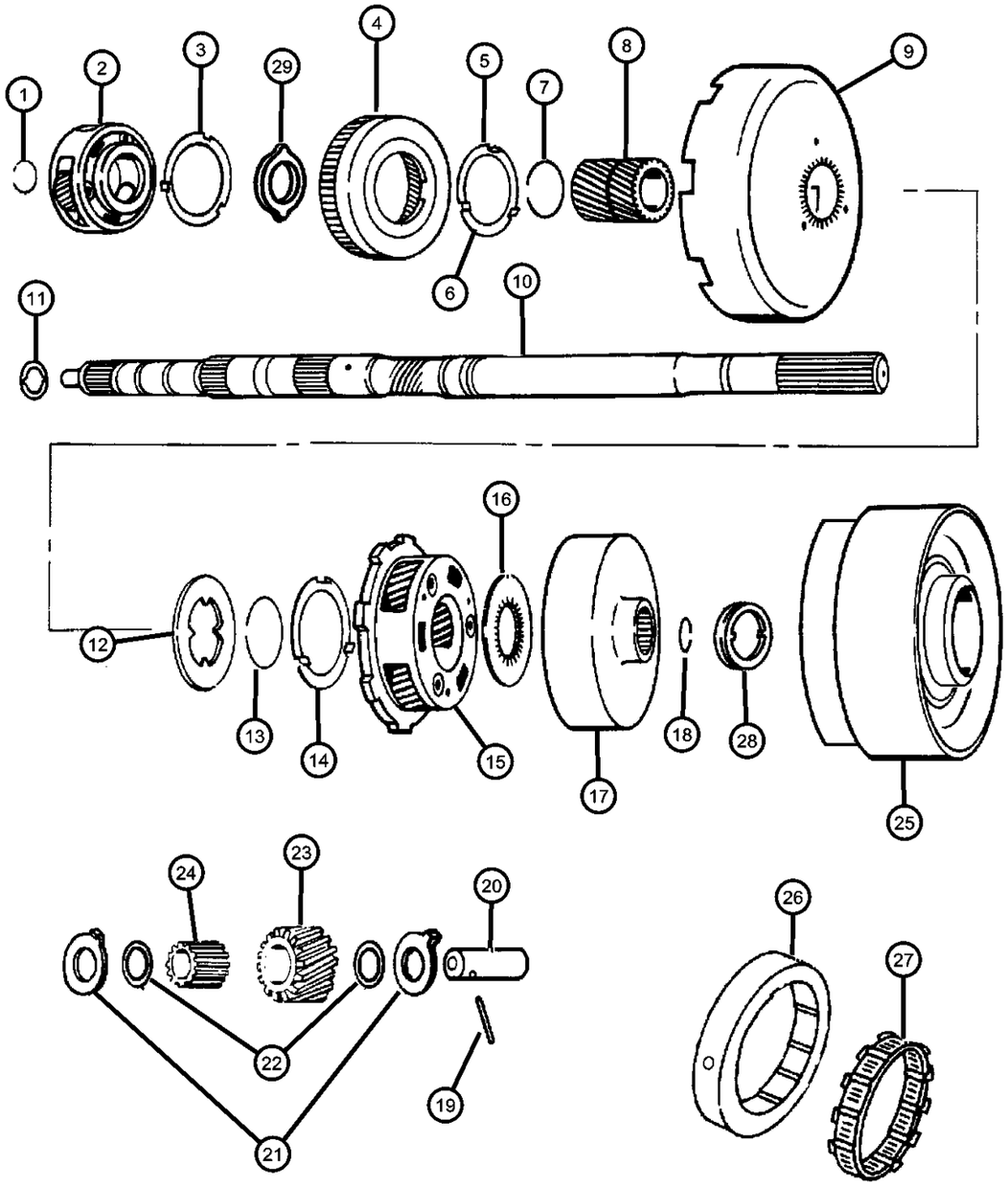

FRONT & REAR PLANET PINION CARRIER GEARS

ITEM	PART NUMBER	QTY	LINE	SERIES	BODY	ENGINE	TRANS	TRIM	DESCRIPTION
		1	1				DGT		
11									PLATE, Transmission Module
	04505188	1	5				DGT		
		1	1				DGT		
12									PLATE, Sun Gear Driving Shell
	01942080	1	5				DGT		
		1	1				DGT		
13									SNAP RING, Sun Gear
	01736521	1	5				DGT		
		1	1				DGT		
14									THRUST WASHER, Planetary Carrier
	02801060	1	5				DGT		
		1	1				DGT		
15									CARRIER, Planetary Pinion
	02801061	1	5				DGT		
		1	1				DGT		
16									PLATE, Annulus Gear Thrust
	02400580	1	5				DGT		
		1	1				DGT		
17									GEAR, Rear Annulus
	04810002AB	1	5				DGT		
		1	1				DGT		
18									SNAP RING
	06033591	1	5				DGT		
		1	1				DGT		
19									DOWEL, .108x1.00
	06024666	5	5				DGT		
		5	1				DGT		
20									SHAFT, Planetary
	04428223	4	5				DGT		
		4	1				DGT		

DAKOTA (AN)

SERIES	LINE	BODY	ENGINE	TRANSMISSION
L = Dakota (All)	1 = Dakota 2WD	61 = Regular Cab (112 WB)	EPE = 2.5L 4 Cylinder	DGK = 4 Speed Automatic 42RE
	5 = Dakota 4WD	31 = Club Cab (131 WB)	EHC = 3.9L 6 Cylinder	DGT = 4 Speed Automatic 46RE
		84 = Quad Cab (131 WB)	EML = 5.0L 8 Cylinder	DDC = 5 Speed HD Manual
			EVA = 4.7L Magnum V8	DDK = 5 Speed HD Manual
			EP0 = All 2.5L	DG4 = Multispeed Automatic 45RFE
			EH0 = All 3.9L	DG0 = All Automatic Transmissions
			EM0 = All 5.9L	DBB = All Manual Transmissions
			EV0 = All 4.7L	

AR = use ase required - = Non illustrrated part

Intermedate Shaft [DGT]
Figure 46RE-420

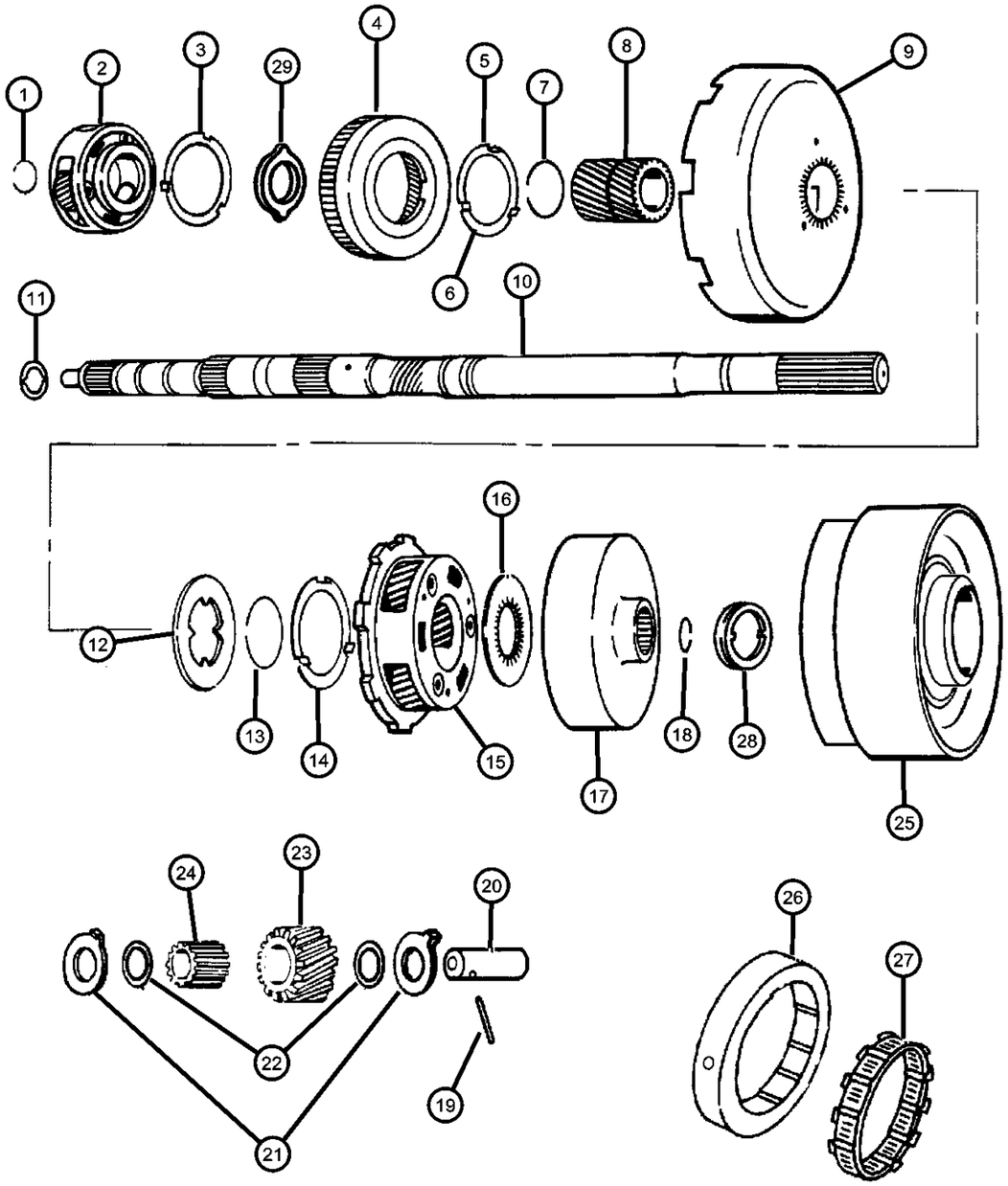

FRONT & REAR PLANET PINION CARRIER GEARS

ITEM	PART NUMBER	QTY	LINE	SERIES	BODY	ENGINE	TRANS	TRIM	DESCRIPTION
21									THRUST WASHER, Planetary Carrier
	02801315	8	5				DGT		Front and Rear
		8	1				DGT		Front and Rear
22									THRUST WASHER, Planet Pinion
	02204649	10	5				DGT		
		10	1				DGT		
23									PINION, Transmission Planetary
	02400667	5	5				DGT		
		5	1				DGT		
24									ROLLER, Front and Rear Pinion
	03743664	92	5				DGT		
		92	1				DGT		
25									DRUM, Automatic Transmission
	52118057	1	5				DGT		
		1	1				DGT		
26									CAM, Overrunning Clutch
	04471473	1	5				DGT		
		1	1				DGT		
27									CLUTCH, Overrunning
	04617199	1	5				DGT		
		1	1				DGT		
28									THRUST WASHER, Reverse Drum
	52118059	1	5				DGT		
		1	1				DGT		
29									PLATE, Annulus Gear Thrust
	02400580	1	5				DGT		
		1	1				DGT		

DAKOTA (AN)

SERIES	LINE	BODY	ENGINE	TRANSMISSION
L = Dakota (All)	1 = Dakota 2WD	61 = Regular Cab (112 WB)	EPE = 2.5L 4 Cylinder	DGK = 4 Speed Automatic 42RE
	5 = Dakota 4WD	31 = Club Cab (131 WB)	EHC = 3.9L 6 Cylinder	DGT = 4 Speed Automatic 46RE
		84 = Quad Cab (131 WB)	EML = 5.0L 8 Cylinder	DDC = 5 Speed HD Manual
			EVA = 4.7L Magnum V8	DDK = 5 Speed HD Manual
			EP0 = All 2.5L	DG4 = Multispeed Automatic 45RFE
			EH0 = All 3.9L	DG0 = All Automatic Transmissions
			EM0 = All 5.9L	DBB = All Manual Transmissions
			EV0 = All 4.7L	

AR = use ase required - = Non illustrrated part

Output Shaft [DGT]
Figure 46RE-430

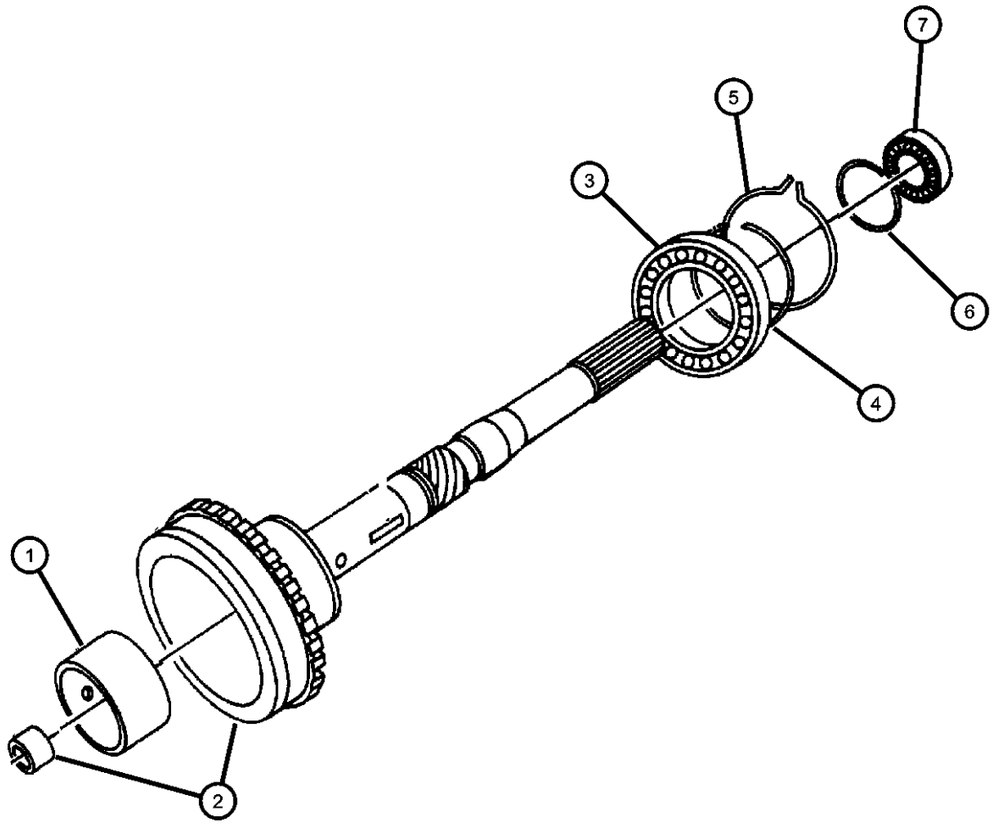

ITEM	PART NUMBER	QTY	LINE	SERIES	BODY	ENGINE	TRANS	TRIM	DESCRIPTION
NOTE:									
Sales Codes:									
[DGT]=46RE 4 Speed Automatic Transmission									
1		1							BUSHING, (NOT SERVICED)
2									SHAFT, Output
	04798536	1	5				DGT		
	05003232AA	1	1				DGT		
3									BEARING, Output Shaft
	02466224	1	5						
	04461008	1	5				DGT		
4									SNAP RING
	04461068	1	5				DGT		
		1	1				DGT		
5									SNAP RING
	04461057	1	5				DGT		
		1	1				DGT		
6	04461069	1	1				DGT		SNAP RING
7									BEARING, Output Shaft
	04461008	1	5				DGT		
		1	1				DGT		

DAKOTA (AN)

SERIES	LINE	BODY	ENGINE	TRANSMISSION
L = Dakota (All)	1 = Dakota 2WD	61 = Regular Cab (112 WB)	EPE = 2.5L 4 Cylinder	DGK = 4 Speed Automatic 42RE
	5 = Dakota 4WD	31 = Club Cab (131 WB)	EHC = 3.9L 6 Cylinder	DGT = 4 Speed Automatic 46RE
		84 = Quad Cab (131 WB)	EML = 5.0L 8 Cylinder	DDC = 5 Speed HD Manual
			EVA = 4.7L Magnum V8	DDK = 5 Speed HD Manual
			EP0 = All 2.5L	DG4 = Multispeed Automatic 45RFE
			EH0 = All 3.9L	DG0 = All Automatic Transmissions
			EM0 = All 5.9L	DBB = All Manual Transmissions
			EV0 = All 4.7L	

Bands [DGT]
Figure 46RE-510

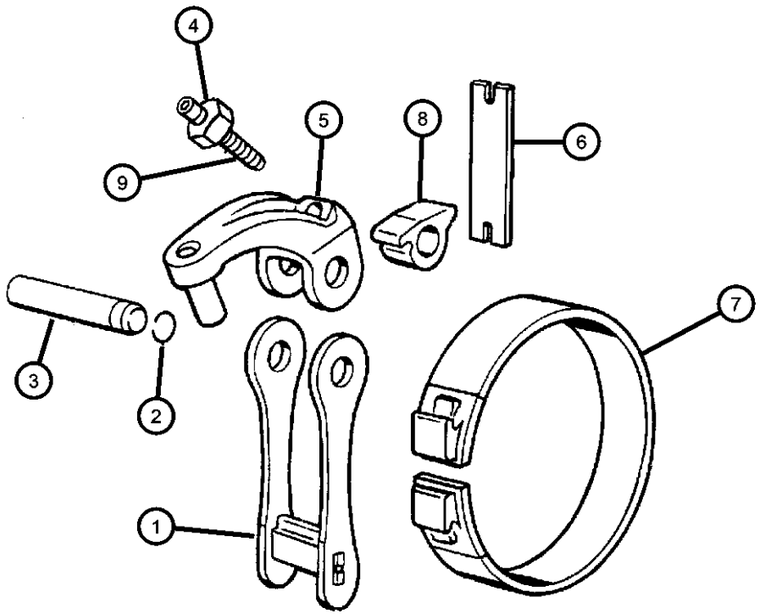

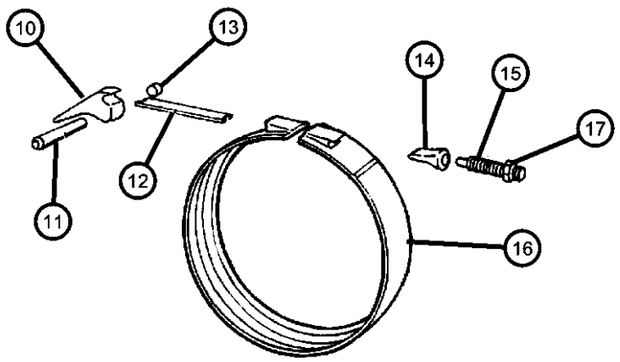

ITEM	PART NUMBER	QTY	LINE	SERIES	BODY	ENGINE	TRANS	TRIM	DESCRIPTION
NOTE:									
Sales Codes:									
[DGT]=46 RE 4 Speed Automatic Transmission									
1									LINK, Transmission Reverse Band
	04617044	1	5				DGT		
		1	1				DGT		
2									SEAL, Reverse Band
	06030910	2	5				DGT		
		2	1				DGT		
3									SHAFT, Band Lever
	02124857	1	5				DGT		
		1	1				DGT		
4									NUT, Hex, .42-20
	00271506	1	5				DGT		
		1	1				DGT		
5									LEVER, Reverse Band
	04617028AB	1	5				DGT		
		1	1				DGT		
6									STRUT, Reverse Band
	04471497AB	1	5				DGT		
		1	1				DGT		
7									BAND, Reverse
	04471476AB	1	5				DGT		
		1	1				DGT		
8									LEVER, Reverse Band
	04617014AB	1	5				DGT		
		1	1				DGT		
9									SCREW, Trans Reverse Band Adjusting, .437-20x1.5
	01942141	1	5				DGT		
		1	1				DGT		
10									LEVER, Kickdown
	52118264	1	5				DGT		
		1	1				DGT		

DAKOTA (AN)

SERIES	LINE	BODY	ENGINE	TRANSMISSION
L = Dakota (All)	1 = Dakota 2WD	61 = Regular Cab (112 WB)	EPE = 2.5L 4 Cylinder	DGK = 4 Speed Automatic 42RE
	5 = Dakota 4WD	31 = Club Cab (131 WB)	EHC = 3.9L 6 Cylinder	DGT = 4 Speed Automatic 46RE
		84 = Quad Cab (131 WB)	EML = 5.0L 8 Cylinder	DDC = 5 Speed HD Manual
			EVA = 4.7L Magnum V8	DDK = 5 Speed HD Manual
			EP0 = All 2.5L	DG4 = Multispeed Automatic 45RFE
			EH0 = All 3.9L	DG0 = All Automatic Transmissions
			EM0 = All 5.9L	DBB = All Manual Transmissions
			EV0 = All 4.7L	

Bands [DGT]
Figure 46RE-510

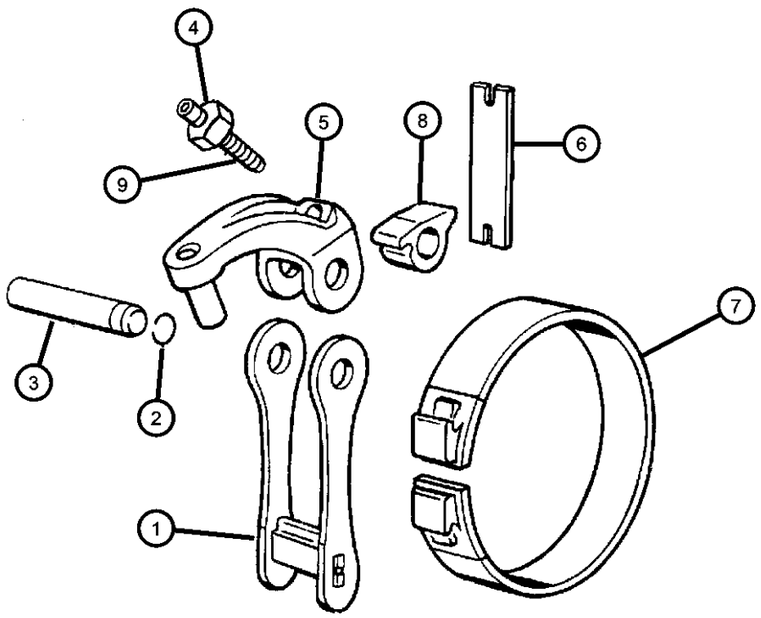

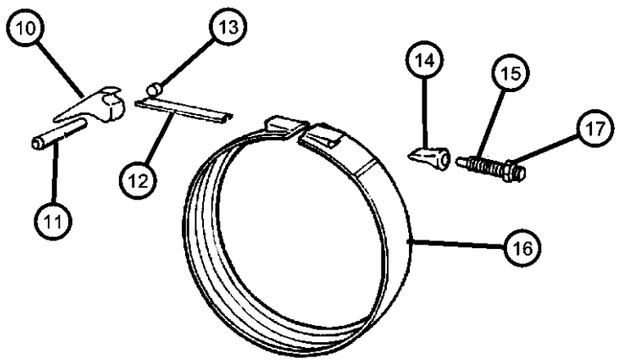

ITEM	PART NUMBER	QTY	LINE	SERIES	BODY	ENGINE	TRANS	TRIM	DESCRIPTION
11									SHAFT, Band Lever
	04531181	1	5				DGT		
		1	1				DGT		
12									STRUT, Kickdown Band
	02124848	1	5				DGT		
		1	1				DGT		
13		1							PLUG, Shaft Lever, (NOT SERVICED)
14									ANCHOR, Kickdown Band
	03743338	1	5				DGT		
		1	1				DGT		
15									SCREW
	06036115AA	1	5				DGT		
		1	1				DGT		
16									BAND, Kickdown
	04329853	1	5				DGT		
		1	1				DGT		
17									NUT, Hex Jam, .50-20
	00124934	1	5				DGT		
		1	1				DGT		

DAKOTA (AN)

SERIES	LINE	BODY	ENGINE	TRANSMISSION
L = Dakota (All)	1 = Dakota 2WD	61 = Regular Cab (112 WB)	EPE = 2.5L 4 Cylinder	DGK = 4 Speed Automatic 42RE
	5 = Dakota 4WD	31 = Club Cab (131 WB)	EHC = 3.9L 6 Cylinder	DGT = 4 Speed Automatic 46RE
		84 = Quad Cab (131 WB)	EML = 5.0L 8 Cylinder	DDC = 5 Speed HD Manual
			EVA = 4.7L Magnum V8	DDK = 5 Speed HD Manual
			EP0 = All 2.5L	DG4 = Multispeed Automatic 45RFE
			EH0 = All 3.9L	DG0 = All Automatic Transmissions
			EM0 = All 5.9L	DBB = All Manual Transmissions
			EV0 = All 4.7L	

AR = use ase required - = Non illustrrated part

Valve Body [DGT]
Figure 46RE-710

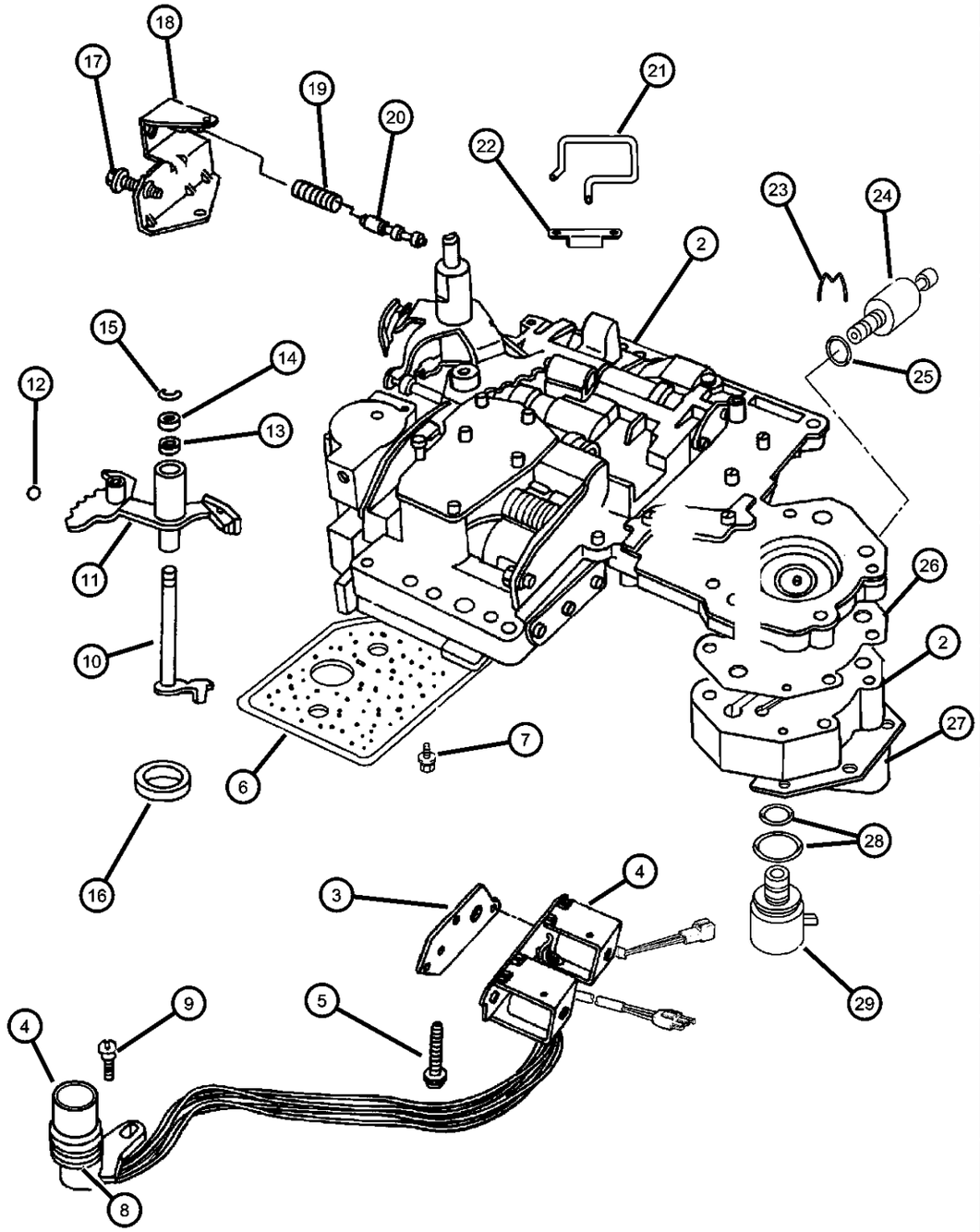

ITEM	PART NUMBER	QTY	LINE	SERIES	BODY	ENGINE	TRANS	TRIM	DESCRIPTION
NOTE:									
Sales Codes:									
[DGT]=46RE 4 Speed Automatic Transmissions									
-1	04863892AE	1	5				DGT		SEAL AND GASKET PACKAGE, Valve Body and Servo
2									VALVE BODY ASSEMBLY
	52118793AC	1	5				DGT		
		1	1				DGT		
3	04886333AA	1	5				DGT		GASKET PACKAGE, Transmission Solenoid
4									SOLENOID, Transmission Overdrive
	52118500AB	1	5				DGT		
		1	1				DGT		
5									BOLT, Valve Body, .25-20x1.75
	00181071	3	5				DGT		
		3	1				DGT		
6									FILTER, Valve Body
	52118789	1	5				DGT		
		1	1				DGT		
7									SCREW AND WASHER, Oil Filter Mounting, Fillester Head .190-24x2.500
	06033826	3	5				DGT		
		3	1				DGT		
8	06034748	1	5				DGT		O RING, Solenoid Wiring, Transmission
9									SCREW, Tapping, .19-24x.75
	06033985	1	1				DGT		
		1	5				DGT		
10									LEVER, Throttle Valve
	03681227	1	5				DGT		
		1	1				DGT		
11									LEVER, Manual Valve
	04617438AB	1	5				DGT		
		1	1				DGT		

DAKOTA (AN)

SERIES	LINE	BODY	ENGINE	TRANSMISSION
L = Dakota (All)	1 = Dakota 2WD	61 = Regular Cab (112 WB)	EPE = 2.5L 4 Cylinder	DGK = 4 Speed Automatic 42RE
	5 = Dakota 4WD	31 = Club Cab (131 WB)	EHC = 3.9L 6 Cylinder	DGT = 4 Speed Automatic 46RE
		84 = Quad Cab (131 WB)	EML = 5.0L 8 Cylinder	DDC = 5 Speed HD Manual
			EVA = 4.7L Magnum V8	DDK = 5 Speed HD Manual
			EP0 = All 2.5L	DG4 = Multispeed Automatic 45RFE
			EH0 = All 3.9L	DG0 = All Automatic Transmissions
			EM0 = All 5.9L	DBB = All Manual Transmissions
			EV0 = All 4.7L	

Valve Body [DGT]
Figure 46RE-710

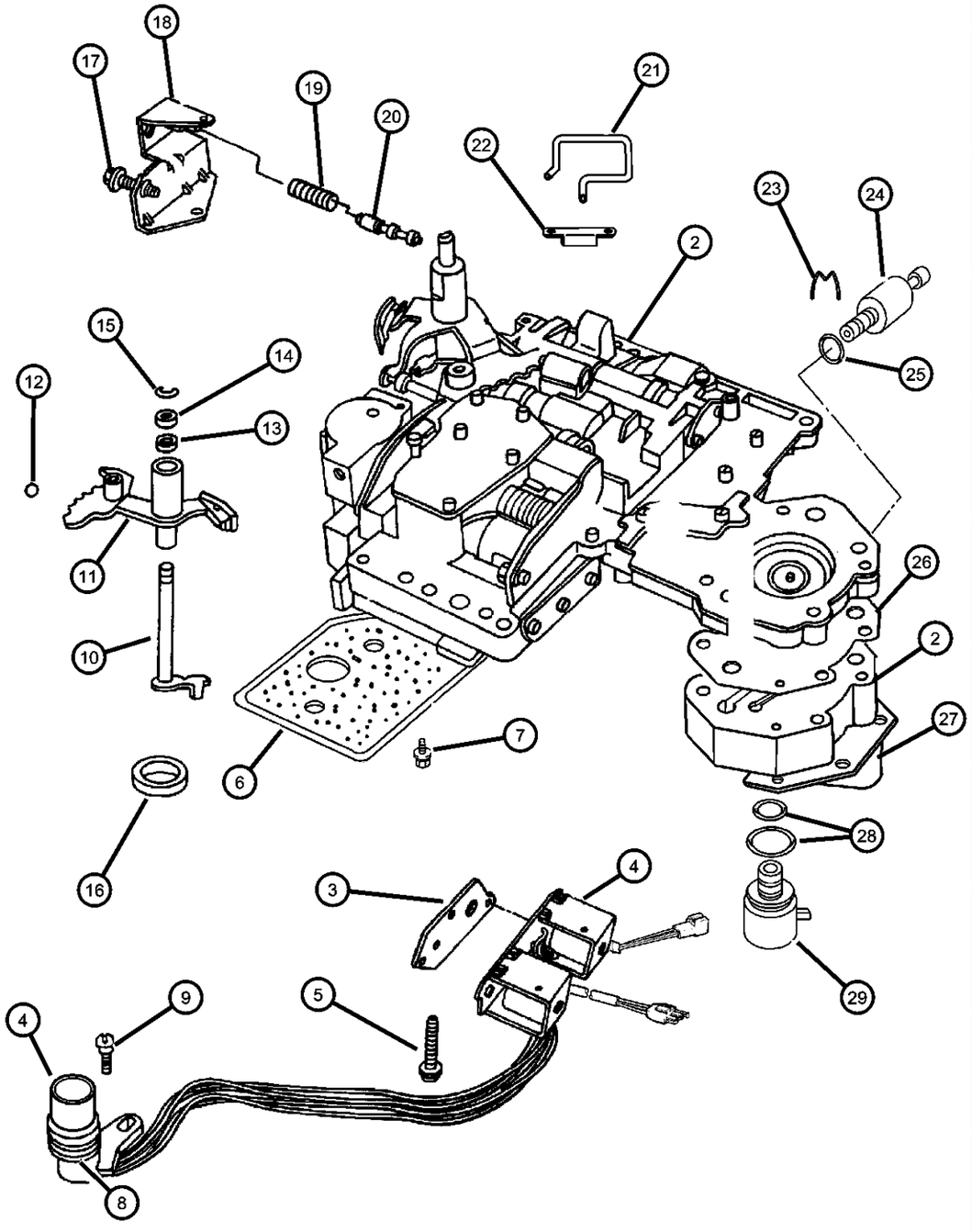

ITEM	PART NUMBER	QTY	LINE	SERIES	BODY	ENGINE	TRANS	TRIM	DESCRIPTION
12									BALL, Manual Lever Detent, .343 Diameter
	00147488	4	5				DGT		
		4	1				DGT		
13									SEAL, Valve Lever Shift
	02466548	1	5				DGT		
		1	1				DGT		
14									WASHER, Manual Valve Lever
	02538062	1	5				DGT		
		1	1				DGT		
15									SNAP RING
	06035208	1	5				DGT		
		1	1				DGT		
16									SEAL, Manual Shift Valve, 1.25 OD
	04505098	1	5				DGT		
		1	1				DGT		
17									SCREW, Cap Head Lock, .312-24x1.25
	06030609	1	5				DGT		
		1	1				DGT		
18									BRACKET, Valve Body Switch
	04617010	1	5				DGT		
		1	1				DGT		
19									SPRING, Switch Valve
	04130492	1	5				DGT		
		1	1				DGT		
20									VALVE, Trans Lockup Switch
	04505036	1	5				DGT		
		1	1				DGT		
21									TUBE, Boost Valve
	04617008	1	5				DGT		
		1	1				DGT		
22									RETAINER, Boost Valve Oil Supply Tube

DAKOTA (AN)

SERIES	LINE	BODY	ENGINE	TRANSMISSION
L = Dakota (All)	1 = Dakota 2WD	61 = Regular Cab (112 WB)	EPE = 2.5L 4 Cylinder	DGK = 4 Speed Automatic 42RE
	5 = Dakota 4WD	31 = Club Cab (131 WB)	EHC = 3.9L 6 Cylinder	DGT = 4 Speed Automatic 46RE
		84 = Quad Cab (131 WB)	EML = 5.0L 8 Cylinder	DDC = 5 Speed HD Manual
			EVA = 4.7L Magnum V8	DDK = 5 Speed HD Manual
			EP0 = All 2.5L	DG4 = Multispeed Automatic 45RFE
			EH0 = All 3.9L	DG0 = All Automatic Transmissions
			EM0 = All 5.9L	DBB = All Manual Transmissions
			EV0 = All 4.7L	

AR = use ase required - = Non illustrrated part

Valve Body [DGT]
Figure 46RE-710

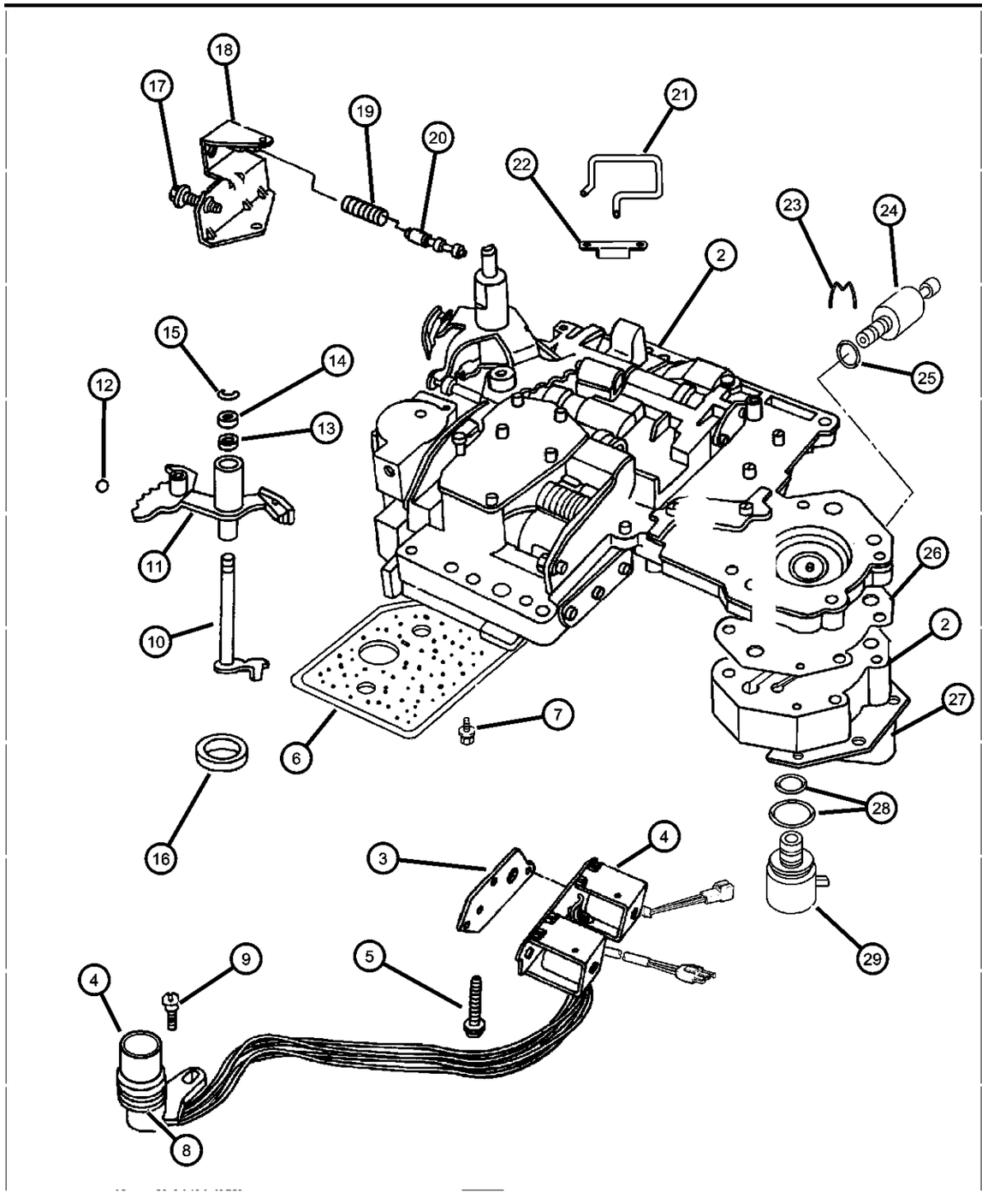

ITEM	PART NUMBER	QTY	LINE	SERIES	BODY	ENGINE	TRANS	TRIM	DESCRIPTION
	52117958	1	5				DGT		
		1	1				DGT		
23									CLIP, Transmission Governor Transducer
	04617219	1	5				DGT		
		1	1				DGT		
24									TRANSDUCER, Pressure Sensor
	56028196AB	1	5				DGT		
		1	1				DGT		
25		1							O RING, Pressure Switch, (NOT SERVICED)
26									GASKET, Transmission Solenoid
	04617216	1	5				DGT		
		1	1				DGT		
27									RETAINER, Transmission Governor Solenoid
	52117937AB	1	5				DGT		
		1	1				DGT		
28									O RING PACKAGE, Valve Body, Transmission
	04723549	1	5				DGT		
		1	1				DGT		
29									SOLENOID, Transmission Governor
	04617210	1	5				DGT		
		1	1				DGT		
-30									SCREEN, Transmission Regulator Valve
	03878313	1	5				DGT		
		1	1				DGT		

DAKOTA (AN)

SERIES	LINE	BODY	ENGINE	TRANSMISSION
L = Dakota (All)	1 = Dakota 2WD	61 = Regular Cab (112 WB)	EPE = 2.5L 4 Cylinder	DGK = 4 Speed Automatic 42RE
	5 = Dakota 4WD	31 = Club Cab (131 WB)	EHC = 3.9L 6 Cylinder	DGT = 4 Speed Automatic 46RE
		84 = Quad Cab (131 WB)	EML = 5.0L 8 Cylinder	DDC = 5 Speed HD Manual
			EVA = 4.7L Magnum V8	DDK = 5 Speed HD Manual
			EP0 = All 2.5L	DG4 = Multispeed Automatic 45RFE
			EH0 = All 3.9L	DG0 = All Automatic Transmissions
			EM0 = All 5.9L	DBB = All Manual Transmissions
			EV0 = All 4.7L	

Servo [DGT]
Figure 46RE-720

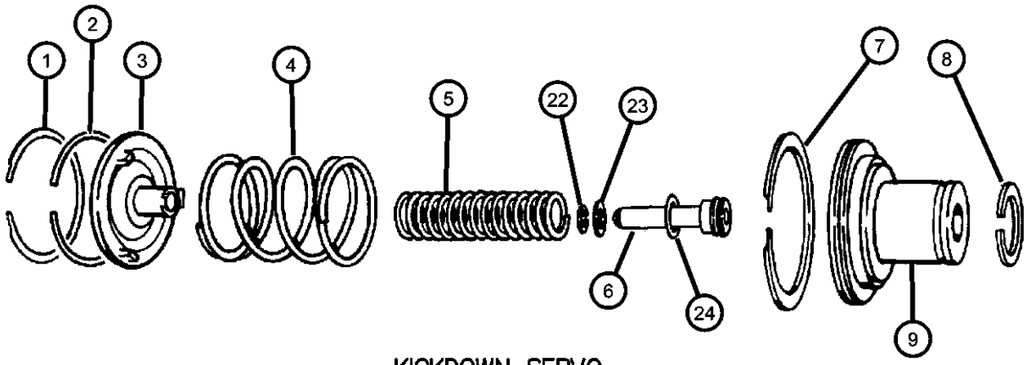

KICKDOWN SERVO

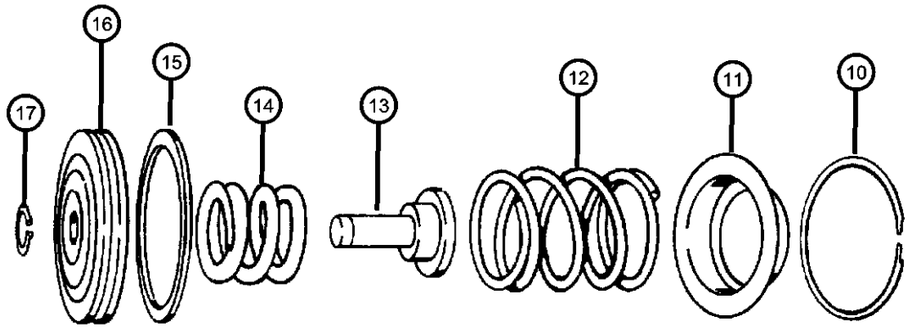

LOW AND REVERSE SERVO

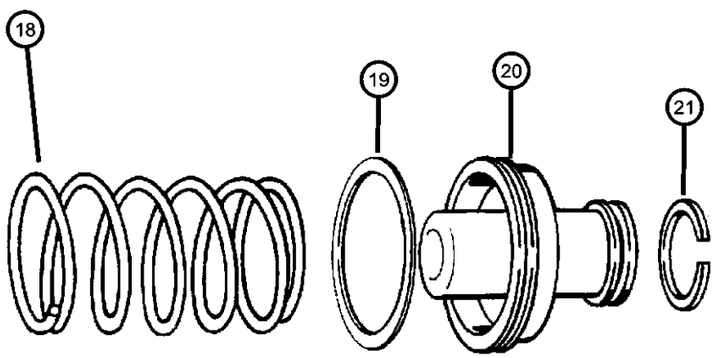

ITEM	PART NUMBER	QTY	LINE	SERIES	BODY	ENGINE	TRANS	TRIM	DESCRIPTION
NOTES:									
Sales Codes:									
[DGT]=46RE 4 Speed Automatic Transmission									
1									SNAP RING
	01942130	1	5				DGT		
		1	1				DGT		
2									SEAL
	01942123	1	5				DGT		
		1	1				DGT		
3									GUIDE, Kickdown Servo
	03410441	1	5				DGT		
		1	1				DGT		
4									SPRING, Kickdown Servo Piston
	04617528	1	5				DGT		
		1	1				DGT		
5									SPRING, Kickdown Servo Piston
	03410444	1	5				DGT		
		1	1				DGT		
6									PISTON, Kickdown Servo
	03410445	1	5				DGT		
		1	1				DGT		
7									SEAL
	01942123	1	5				DGT		
		1	1				DGT		
8									SEAL
	04412444	1	5				DGT		
		1	1				DGT		
9									PISTON, Kickdown Servo
	03410440	1	5				DGT		
		1	1				DGT		
10									SNAP RING
	01942130	1	5				DGT		
		1	1				DGT		

DAKOTA (AN)

SERIES	LINE	BODY	ENGINE	TRANSMISSION
L = Dakota (All)	1 = Dakota 2WD	61 = Regular Cab (112 WB)	EPE = 2.5L 4 Cylinder	DGK = 4 Speed Automatic 42RE
	5 = Dakota 4WD	31 = Club Cab (131 WB)	EHC = 3.9L 6 Cylinder	DGT = 4 Speed Automatic 46RE
		84 = Quad Cab (131 WB)	EML = 5.0L 8 Cylinder	DDC = 5 Speed HD Manual
			EVA = 4.7L Magnum V8	DDK = 5 Speed HD Manual
			EP0 = All 2.5L	DG4 = Multispeed Automatic 45RFE
			EH0 = All 3.9L	DG0 = All Automatic Transmissions
			EM0 = All 5.9L	DBB = All Manual Transmissions
			EV0 = All 4.7L	

Servo [DGT]
Figure 46RE-720

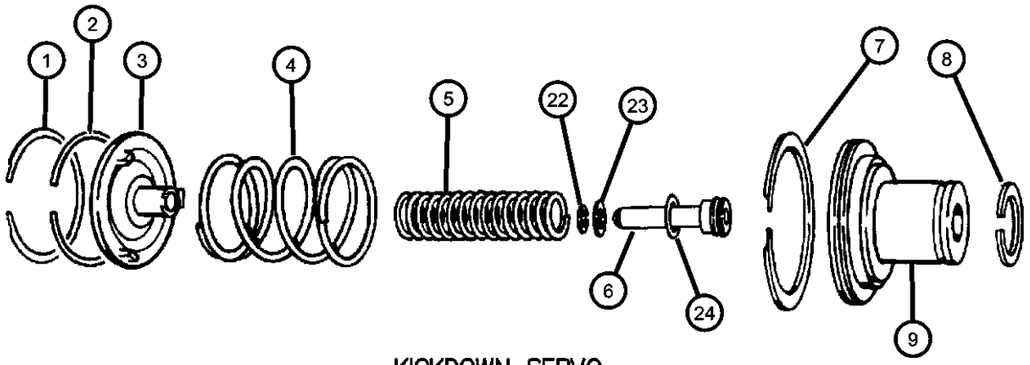

KICKDOWN SERVO

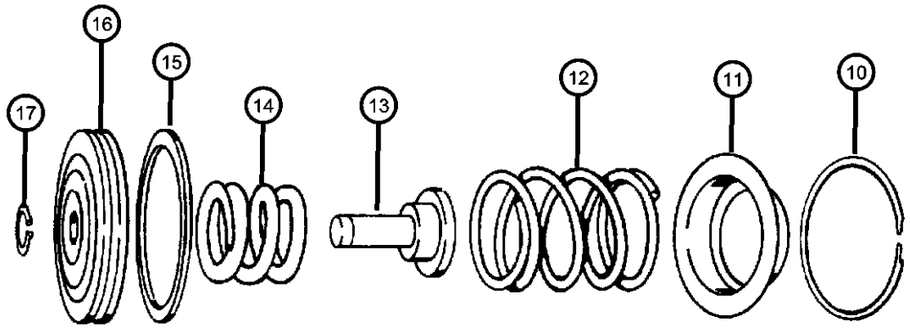

LOW AND REVERSE SERVO

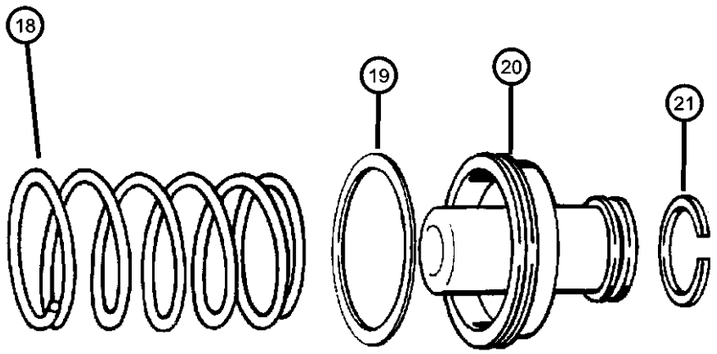

ITEM	PART NUMBER	QTY	LINE	SERIES	BODY	ENGINE	TRANS	TRIM	DESCRIPTION
11									RETAINER, Transmission Reverse Servo Piston Spring
	01942150	1	5				DGT		
		1	1				DGT		
12									SPRING, Reverse Servo Piston
	02801241	1	5				DGT		
		1	1				DGT		
13									PLUG, Reverse Servo Piston
	52118740AB	1	5				DGT		
		1	1				DGT		
14									SPRING, Reverse Servo Piston
	52118759AB	1	5				DGT		
		1	1				DGT		
15									SEAL, Piston Reverse Servo, Rubber
	04058741	1	5				DGT		
		1	1				DGT		
16									PISTON, Reverse Servo
	02801281	1	5				DGT		
		1	1				DGT		
17									SNAP RING, .435 ID
	06027153	1	5				DGT		
		1	1				DGT		
18									SPRING, Accumulator Piston
	03515079	1	5				DGT		
		1	1				DGT		
19									SEAL, Piston Accumulator
	03743013	1	5				DGT		
		1	1				DGT		
20									PISTON, Accumulator
	03743650	1	5				DGT		
		1	1				DGT		
21									SEAL, Piston Accumulator

DAKOTA (AN)

SERIES	LINE	BODY	ENGINE	TRANSMISSION
L = Dakota (All)	1 = Dakota 2WD	61 = Regular Cab (112 WB)	EPE = 2.5L 4 Cylinder	DGK = 4 Speed Automatic 42RE
	5 = Dakota 4WD	31 = Club Cab (131 WB)	EHC = 3.9L 6 Cylinder	DGT = 4 Speed Automatic 46RE
		84 = Quad Cab (131 WB)	EML = 5.0L 8 Cylinder	DDC = 5 Speed HD Manual
			EVA = 4.7L Magnum V8	DDK = 5 Speed HD Manual
			EP0 = All 2.5L	DG4 = Multispeed Automatic 45RFE
			EH0 = All 3.9L	DG0 = All Automatic Transmissions
			EM0 = All 5.9L	DBB = All Manual Transmissions
			EV0 = All 4.7L	

Servo [DGT]
Figure 46RE-720

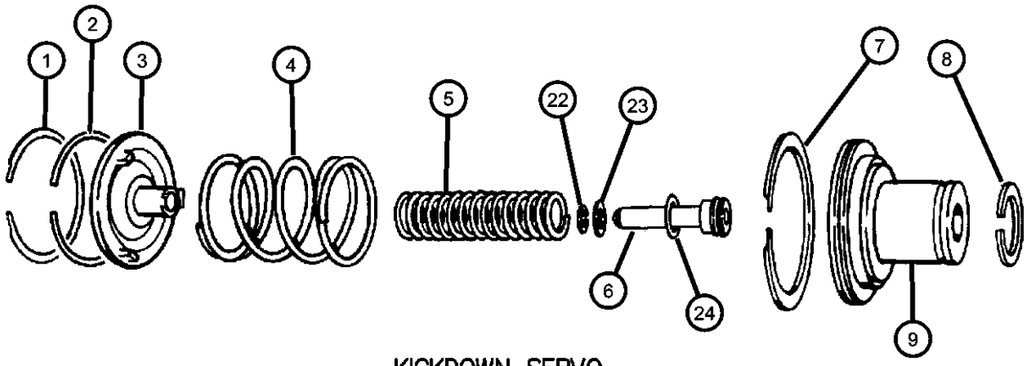

KICKDOWN SERVO

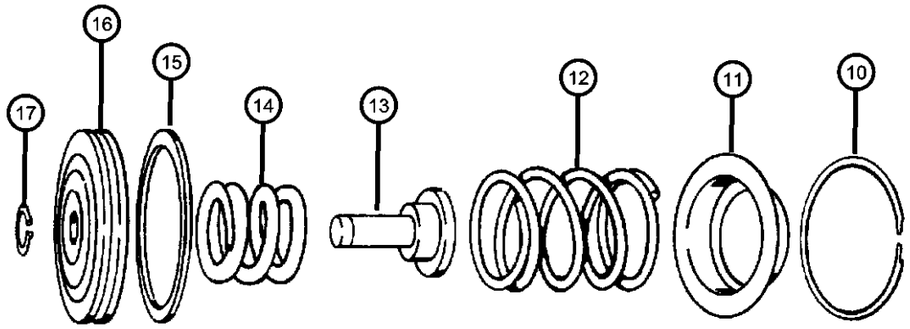

LOW AND REVERSE SERVO

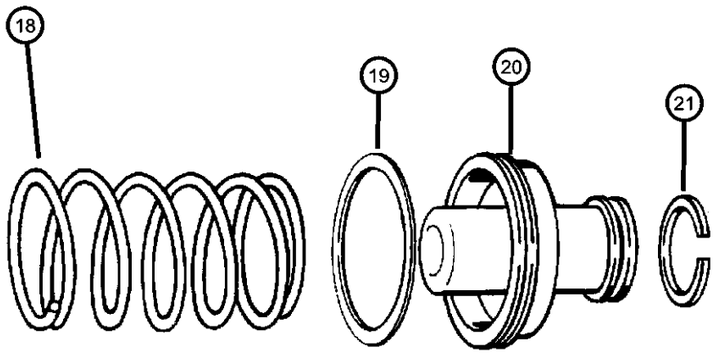

ITEM	PART NUMBER	QTY	LINE	SERIES	BODY	ENGINE	TRANS	TRIM	DESCRIPTION
	03743010	1	5				DGT		
		1	1				DGT		
22									SNAP RING, Brake Master Cylinder
	06031392	1	5				DGT		
		1	1				DGT		
23									RETAINER, Kick Down
	03410437	1	5				DGT		
		1	1				DGT		
24									O RING, Kick Down Servo
	06028864	1	5				DGT		
		1	1				DGT		

DAKOTA (AN)

SERIES	LINE	BODY	ENGINE	TRANSMISSION
L = Dakota (All)	1 = Dakota 2WD	61 = Regular Cab (112 WB)	EPE = 2.5L 4 Cylinder	DGK = 4 Speed Automatic 42RE
	5 = Dakota 4WD	31 = Club Cab (131 WB)	EHC = 3.9L 6 Cylinder	DGT = 4 Speed Automatic 46RE
		84 = Quad Cab (131 WB)	EML = 5.0L 8 Cylinder	DDC = 5 Speed HD Manual
			EVA = 4.7L Magnum V8	DDK = 5 Speed HD Manual
			EP0 = All 2.5L	DG4 = Multispeed Automatic 45RFE
			EH0 = All 3.9L	DG0 = All Automatic Transmissions
			EM0 = All 5.9L	DBB = All Manual Transmissions
			EV0 = All 4.7L	

AR = use ase required - = Non illustrrated part

Parking Sprag [DGT]
Figure 46RE-730

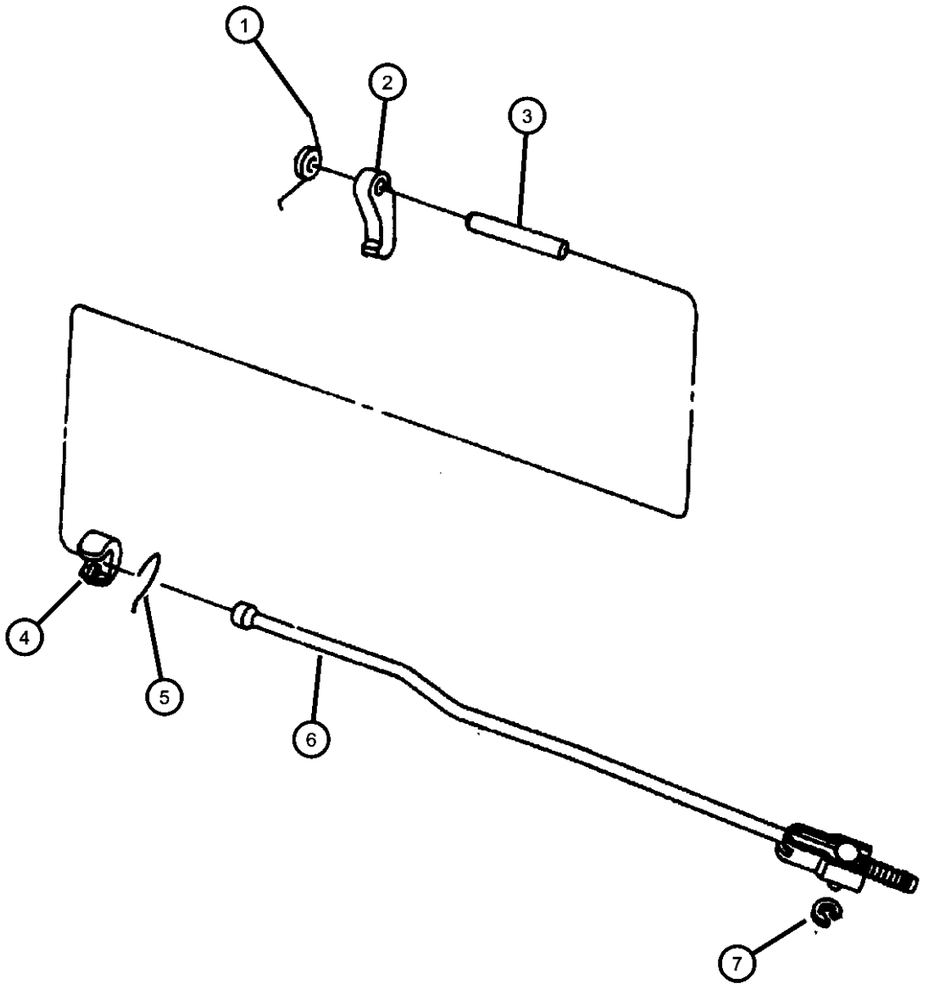

ITEM	PART NUMBER	QTY	LINE	SERIES	BODY	ENGINE	TRANS	TRIM	DESCRIPTION
NOTE:									
Sales Codes:									
[DGK]=46RE 4 Speed Automatic Transmission									
1									SPRING, Parking Sprag
	02466909	1	5				DGT		
		1	1				DGT		
2									SPRAG, Transmission Parking
	04471415	1	5				DGT		
		1	1				DGT		
3									SHAFT, Parking Sprag
	02466892	1	5				DGT		
		1	1				DGT		
4									PLUG, Parking Sprag
	02538042	1	5				DGT		
		1	1				DGT		
5									SNAP RING, Transmission
	02538034	1	5				DGT		
		1	1				DGT		
6									ROD, Parking Sprag
	04471478	1	5				DGT		
		1	1				DGT		
7									SNAP RING, Rod
	06035256	1	5				DGT		
		1	1				DGT		

DAKOTA (AN)

SERIES	LINE	BODY	ENGINE	TRANSMISSION
L = Dakota (All)	1 = Dakota 2WD	61 = Regular Cab (112 WB)	EPE = 2.5L 4 Cylinder	DGK = 4 Speed Automatic 42RE
	5 = Dakota 4WD	31 = Club Cab (131 WB)	EHC = 3.9L 6 Cylinder	DGT = 4 Speed Automatic 46RE
		84 = Quad Cab (131 WB)	EML = 5.0L 8 Cylinder	DDC = 5 Speed HD Manual
			EVA = 4.7L Magnum V8	DDK = 5 Speed HD Manual
			EP0 = All 2.5L	DG4 = Multispeed Automatic 45RFE
			EH0 = All 3.9L	DG0 = All Automatic Transmissions
			EM0 = All 5.9L	DBB = All Manual Transmissions
			EV0 = All 4.7L	

Clutch [DGT]
Figure 46RE-1010

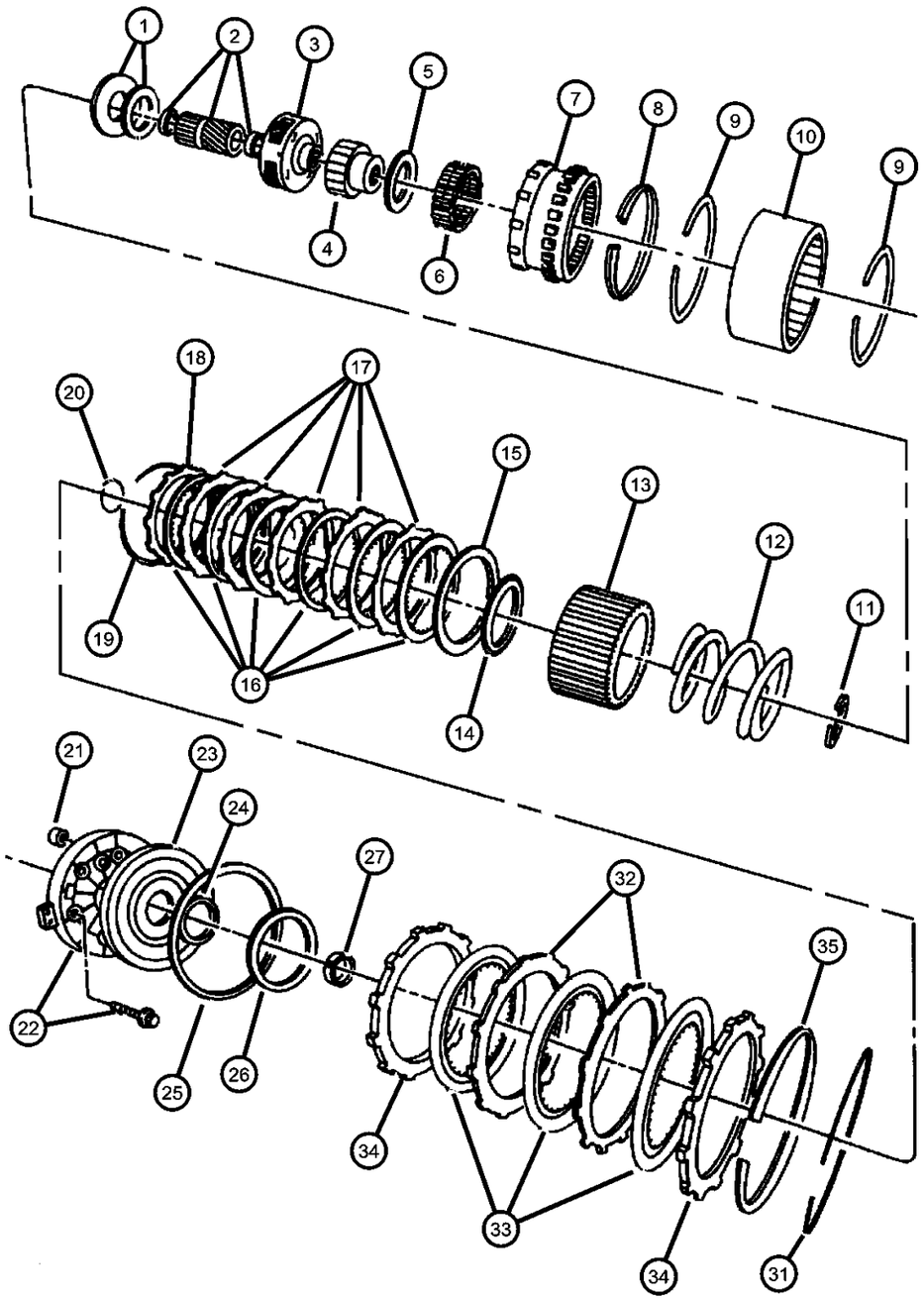

ITEM	PART NUMBER	QTY	LINE	SERIES	BODY	ENGINE	TRANS	TRIM	DESCRIPTION
NOTE:									
Sales Codes:									
[DGT]=46RE 4 Speed Automatic Transmissions									
1									PLATE PACKAGE, Transmission Module
	04740774	1	5				DGT		
		1	1				DGT		
2									GEAR, Overdrive Sun
	05015107AA	1	1				DGT		
		1	5				DGT		
3									CARRIER, O/Drive Planet Pinion
	04798520	1	5				DGT		
		1	1				DGT		
4									RACE, Overrunning Clutch
	04461124	1	5				DGT		
		1	1				DGT		
5									THRUST BEARING, Ovedrive Third Position
	04461014	1	5				DGT		
		1	1				DGT		
6									CLUTCH, Overdrive Overrunning
	04461015	1	5				DGT		
		1	1				DGT		
7									GEAR, Overdrive Annulus
	04761010	1	5				DGT		
		1	1				DGT		
8									SNAP RING, 5.25 OD
	04461059	1	5				DGT		
		1	1				DGT		
9									SNAP RING, 6.00 OD
	04461060	2	5				DGT		
		2	1				DGT		
10									DRUM, Automatic Transmission
	04461089	1	5				DGT		

DAKOTA (AN)

SERIES	LINE	BODY	ENGINE	TRANSMISSION
L = Dakota (All)	1 = Dakota 2WD	61 = Regular Cab (112 WB)	EPE = 2.5L 4 Cylinder	DGK = 4 Speed Automatic 42RE
	5 = Dakota 4WD	31 = Club Cab (131 WB)	EHC = 3.9L 6 Cylinder	DGT = 4 Speed Automatic 46RE
		84 = Quad Cab (131 WB)	EML = 5.0L 8 Cylinder	DDC = 5 Speed HD Manual
			EVA = 4.7L Magnum V8	DDK = 5 Speed HD Manual
			EP0 = All 2.5L	DG4 = Multispeed Automatic 45RFE
			EH0 = All 3.9L	DG0 = All Automatic Transmissions
			EM0 = All 5.9L	DBB = All Manual Transmissions
			EV0 = All 4.7L	

Clutch [DGT]
Figure 46RE-1010

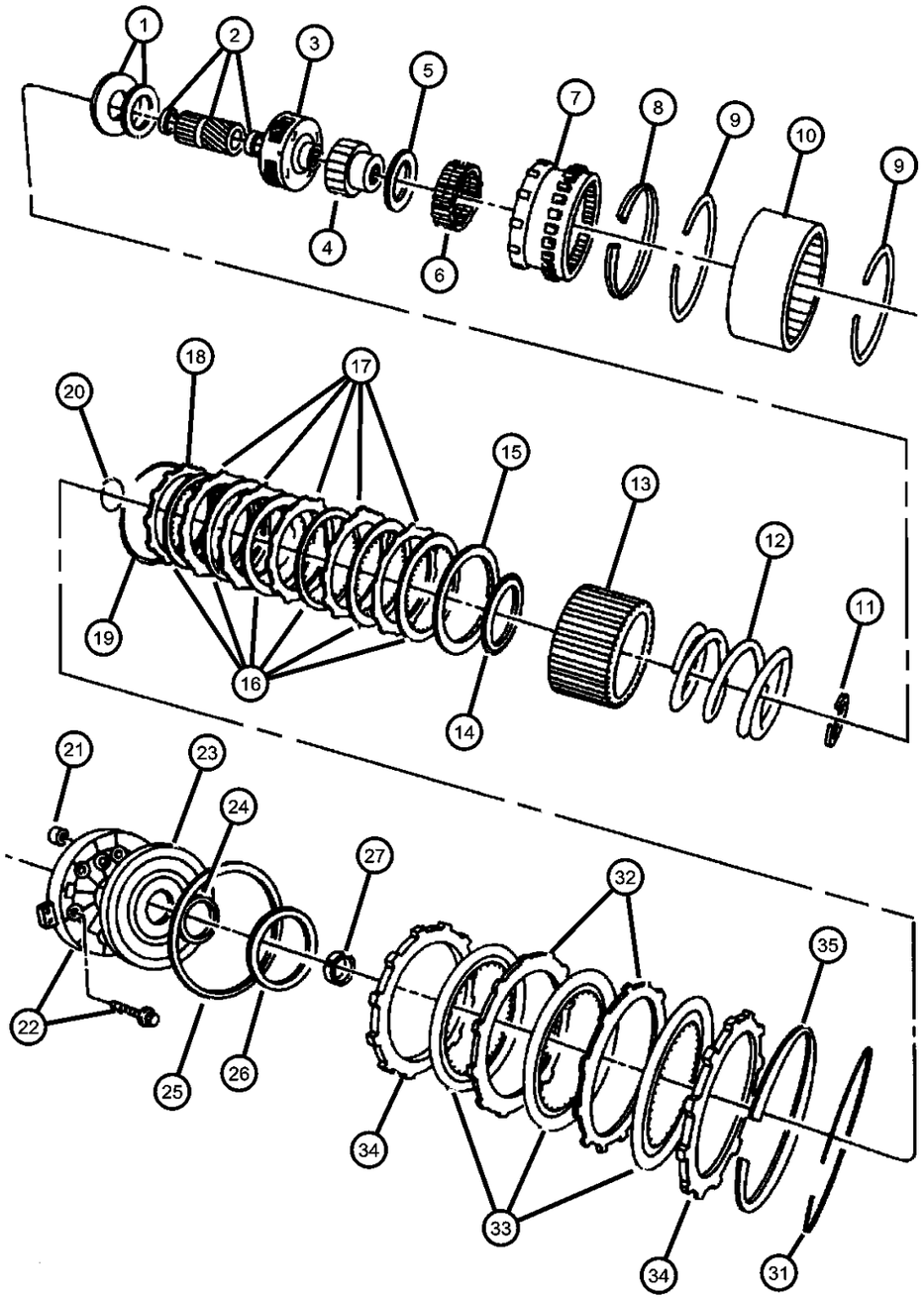

ITEM	PART NUMBER	QTY	LINE	SERIES	BODY	ENGINE	TRANS	TRIM	DESCRIPTION
		1	1				DGT		
11									SNAP RING, 2.1875 OD
	04461063	1	5				DGT		
		1	1				DGT		
12									SPRING, Direct Clutch
	04461027	1	1				DGT		
	04461032	1	5				DGT		
13									HUB, Direct Clutch
	04461072	1	5				DGT		
		1	1				DGT		
14									THRUST BEARING, Overdrive
	04446724	1	5				DGT		
		1	1				DGT		
15									PLATE, Transmission Clutch Reaction
	04461030	1	5				DGT		
		1	1				DGT		
16									DISC, Direct Clutch
	04461042	8	5				DGT		
		8	1				DGT		
17									PLATE, Transmission Clutch Reaction
	04461054	7	5				DGT		
		7	1				DGT		
18									PLATE, Transmission Clutch Reaction
	04461031	1	5				DGT		
		1	1				DGT		
19									SPRING, Direct Clutch
	04461032	1	5				DGT		
		1	1				DGT		
20									SNAP RING, 1.875" OD
	04461064	1	5				DGT		
		1	1				DGT		

DAKOTA (AN)

SERIES	LINE	BODY	ENGINE	TRANSMISSION
L = Dakota (All)	1 = Dakota 2WD	61 = Regular Cab (112 WB)	EPE = 2.5L 4 Cylinder	DGK = 4 Speed Automatic 42RE
	5 = Dakota 4WD	31 = Club Cab (131 WB)	EHC = 3.9L 6 Cylinder	DGT = 4 Speed Automatic 46RE
		84 = Quad Cab (131 WB)	EML = 5.0L 8 Cylinder	DDC = 5 Speed HD Manual
			EVA = 4.7L Magnum V8	DDK = 5 Speed HD Manual
			EP0 = All 2.5L	DG4 = Multispeed Automatic 45RFE
			EH0 = All 3.9L	DG0 = All Automatic Transmissions
			EM0 = All 5.9L	DBB = All Manual Transmissions
			EV0 = All 4.7L	

AR = use ase required - = Non illustrrated part

Clutch [DGT]
Figure 46RE-1010

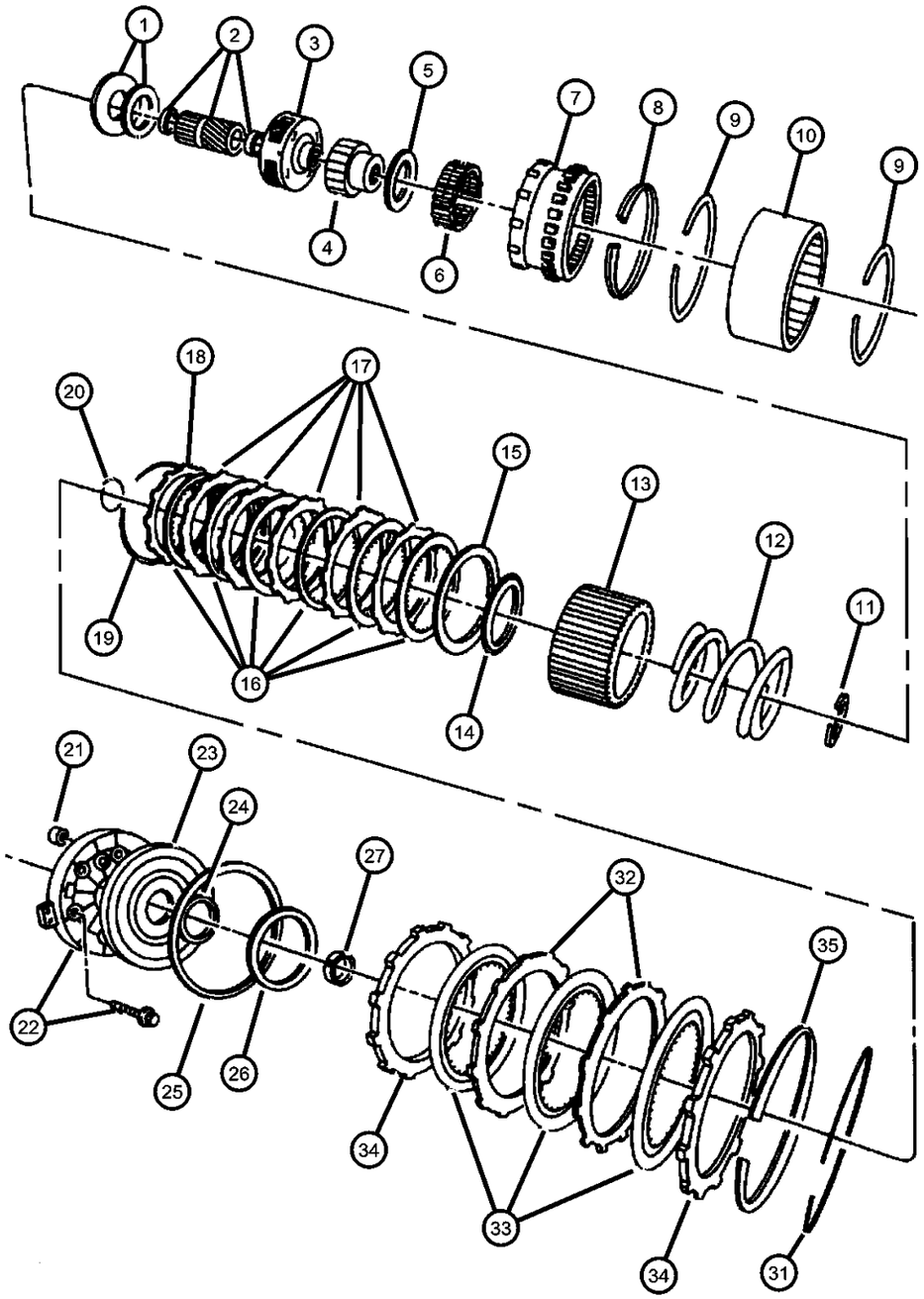

ITEM	PART NUMBER	QTY	LINE	SERIES	BODY	ENGINE	TRANS	TRIM	DESCRIPTION
21									FILTER, Overdrive Clutch
	04412583	1	5				DGT		
		1	1				DGT		
22									RETAINER, Transmission O/Drive Clutch Piston
	52117975	1	5				DGT		
		1	1				DGT		
23									PISTON, Overdrive Clutch
	52118599	1	5				DGT		
		1	1				DGT		
24									SEAL, Overdrive Clutch Piston
	04431696	1	5				DGT		
		1	1				DGT		
25									SEAL, Overdrive Clutch Piston
	04431696	1	5				DGT		
		1	1				DGT		
26									PLATE, Transmission O/Drive Clutch
	04431585	1	5				DGT		[.123/.125] Thick
		1	1				DGT		[.123/.125] Thick
	04431586	1	5				DGT		[.153/.155] Thick
		1	1				DGT		[.153/.155] Thick
	04431587	1	5				DGT		[.183/.185] Thick
		1	1				DGT		[.183/.185] Thick
	04431588	1	5				DGT		[.213/.215] Thick
		1	1				DGT		[.213/.215] Thick
	04431590	1	5				DGT		[.243/.245] Thick
		1	1				DGT		[.243/.245] Thick
	04431731	1	5				DGT		[.138/.140] Thick
		1	1				DGT		[.138/.140] Thick
	04431732	1	5				DGT		[.168/.170] Thick
		1	1				DGT		[.168/.170] Thick
	04431733	1	5				DGT		[.198/.200] Thick

DAKOTA (AN)

SERIES	LINE	BODY	ENGINE	TRANSMISSION
L = Dakota (All)	1 = Dakota 2WD	61 = Regular Cab (112 WB)	EPE = 2.5L 4 Cylinder	DGK = 4 Speed Automatic 42RE
	5 = Dakota 4WD	31 = Club Cab (131 WB)	EHC = 3.9L 6 Cylinder	DGT = 4 Speed Automatic 46RE
		84 = Quad Cab (131 WB)	EML = 5.0L 8 Cylinder	DDC = 5 Speed HD Manual
			EVA = 4.7L Magnum V8	DDK = 5 Speed HD Manual
			EP0 = All 2.5L	DG4 = Multispeed Automatic 45RFE
			EH0 = All 3.9L	DG0 = All Automatic Transmissions
			EM0 = All 5.9L	DBB = All Manual Transmissions
			EV0 = All 4.7L	

Clutch [DGT]
Figure 46RE-1010

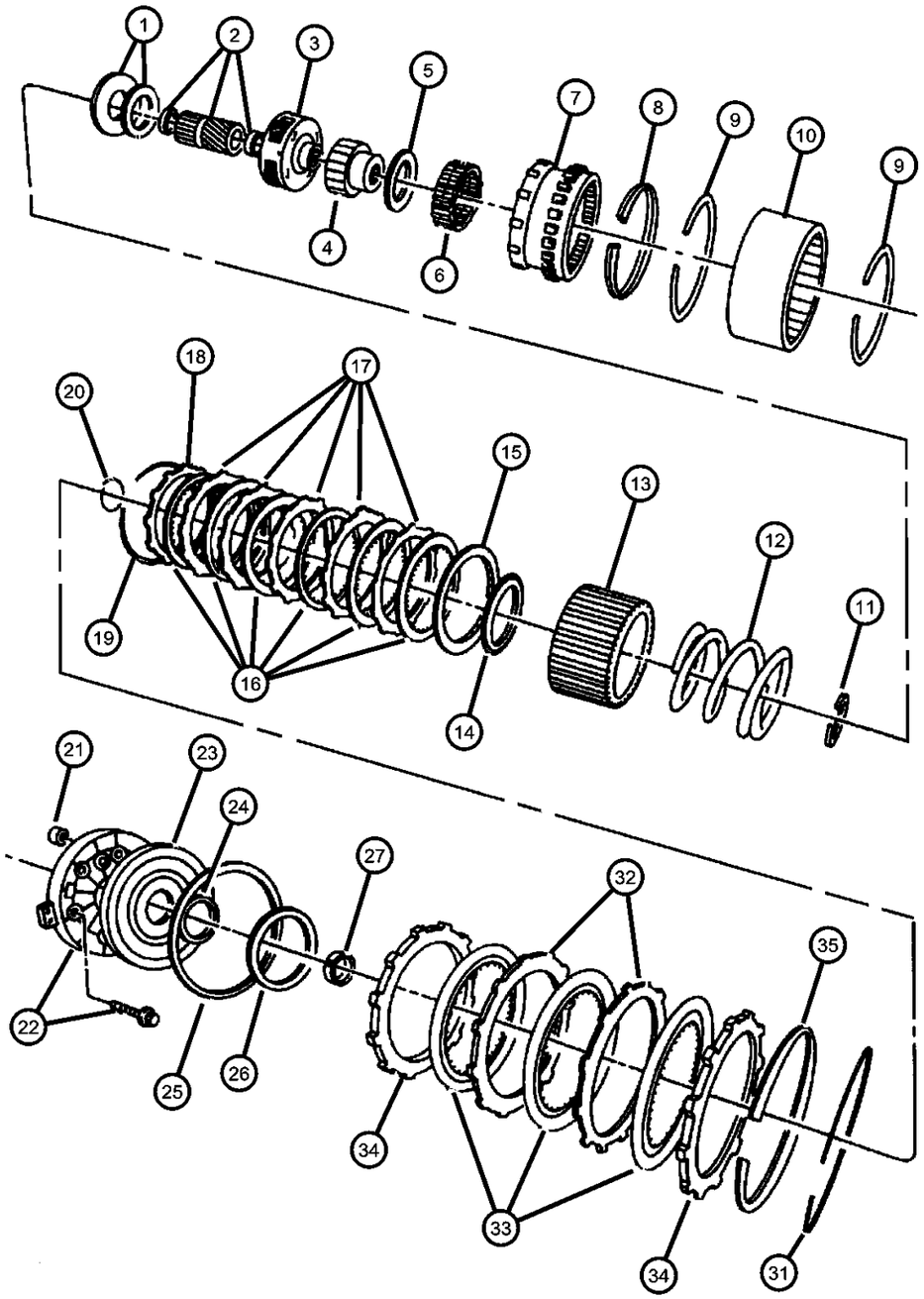

ITEM	PART NUMBER	QTY	LINE	SERIES	BODY	ENGINE	TRANS	TRIM	DESCRIPTION
		1	1				DGT		[.198/.200] Thick
	04431734	1	5				DGT		[.228/.230] Thick
		1	1				DGT		[.228/.230] Thick
	04431735	1	5				DGT		[.258/.260] Thick
		1	1				DGT		[.258/.260] Thick
27									SPACER, Intermediate Shaft, 1.58mm
	04431916	1	5				DGT		
		1	1				DGT		
-28									SPACER, Intermediate Shaft, .175
	04431917	1	5				DGT		
		1	1				DGT		
-29									SPACER, Intermediate Shaft, .193
	04431918	1	5				DGT		
		1	1				DGT		
-30									SPACER, Intermediate Shaft, .211
	04431919	1	5				DGT		
		1	1				DGT		
31									SNAP RING, 6.50 OD
	04461065	1	5				DGT		
		1	1				DGT		
32									PLATE, Transmission Clutch Reaction
	04461047	3	5				DGT		
		3	1				DGT		
33									DISC, Direct Clutch
	04461181	1	5				DGT		
		4	5				DGT		
34									PLATE, Transmission Clutch Reaction
	04461033	1	5				DGT		
		2	1				DGT		
35									SPRING, Overdrive Clutch

DAKOTA (AN)

SERIES	LINE	BODY	ENGINE	TRANSMISSION
L = Dakota (All)	1 = Dakota 2WD	61 = Regular Cab (112 WB)	EPE = 2.5L 4 Cylinder	DGK = 4 Speed Automatic 42RE
	5 = Dakota 4WD	31 = Club Cab (131 WB)	EHC = 3.9L 6 Cylinder	DGT = 4 Speed Automatic 46RE
		84 = Quad Cab (131 WB)	EML = 5.0L 8 Cylinder	DDC = 5 Speed HD Manual
			EVA = 4.7L Magnum V8	DDK = 5 Speed HD Manual
			EP0 = All 2.5L	DG4 = Multispeed Automatic 45RFE
			EH0 = All 3.9L	DG0 = All Automatic Transmissions
			EM0 = All 5.9L	DBB = All Manual Transmissions
			EV0 = All 4.7L	

AR = use ase required - = Non illustrrated part

Clutch [DGT]
Figure 46RE-1010

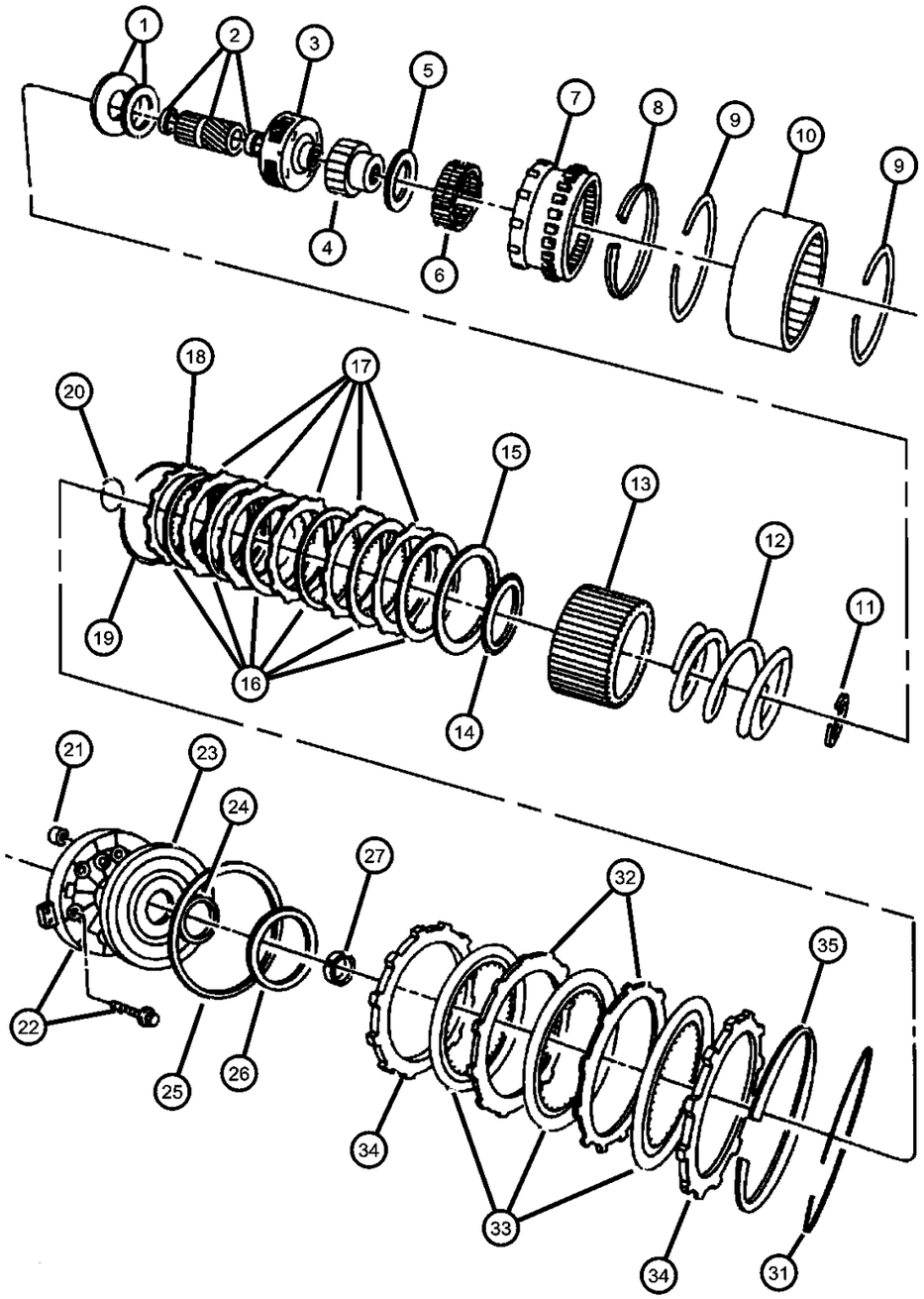

ITEM	PART NUMBER	QTY	LINE	SERIES	BODY	ENGINE	TRANS	TRIM	DESCRIPTION
	04461066	1	5				DGT		
		1	1				DGT		

DAKOTA (AN)

SERIES	LINE	BODY	ENGINE	TRANSMISSION
L = Dakota (All)	1 = Dakota 2WD	61 = Regular Cab (112 WB)	EPE = 2.5L 4 Cylinder	DGK = 4 Speed Automatic 42RE
	5 = Dakota 4WD	31 = Club Cab (131 WB)	EHC = 3.9L 6 Cylinder	DGT = 4 Speed Automatic 46RE
		84 = Quad Cab (131 WB)	EML = 5.0L 8 Cylinder	DDC = 5 Speed HD Manual
			EVA = 4.7L Magnum V8	DDK = 5 Speed HD Manual
			EP0 = All 2.5L	DG4 = Multispeed Automatic 45RFE
			EH0 = All 3.9L	DG0 = All Automatic Transmissions
			EM0 = All 5.9L	DBB = All Manual Transmissions
			EV0 = All 4.7L	

Gearshift Controls [DGT]
Figure 46RE-1210

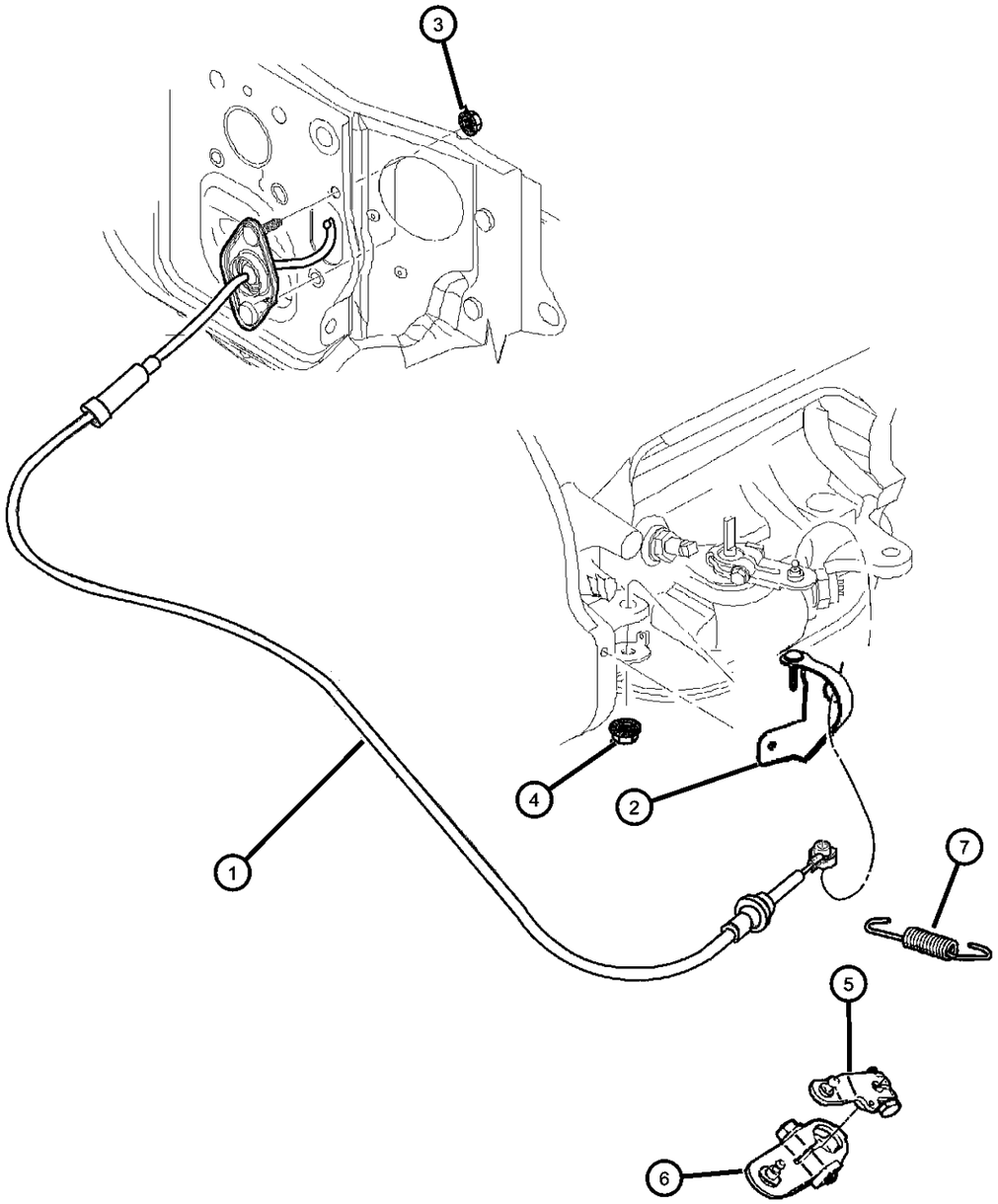

ITEM	PART NUMBER	QTY	LINE	SERIES	BODY	ENGINE	TRANS	TRIM	DESCRIPTION

NOTE:
Sales Codes:
[DGK]=42RE 4 Speed Automatic Transmission
[DGT]=46 RE 4 Speed Automatic Transmission
[DG0]=All Automatic Transmissions
[EM0]=All 5.9L V-8 Engines

1	52110004AE	1					DGK, DGT		CABLE, Shift
2	52107845AB	1				EM0	DGT		BRACKET, Shift Cable
3	06503269	2					DG0		NUT, Hex, M10-1.5
4	06502697	1					DGK, DGT		NUT, Hex Flange Lock, M12x1.75
5	52079065	1					DGK, DGT		LEVER, Throttle Valve
6	52107678AB	1					DGK, DGT		LEVER, Manual Control
7	53009055	1					DGK, DGT		SPRING, Throttle Valve Return

DAKOTA (AN)

SERIES	LINE	BODY	ENGINE	TRANSMISSION
L = Dakota (All)	1 = Dakota 2WD	61 = Regular Cab (112 WB)	EPE = 2.5L 4 Cylinder	DGK = 4 Speed Automatic 42RE
	5 = Dakota 4WD	31 = Club Cab (131 WB)	EHC = 3.9L 6 Cylinder	DGT = 4 Speed Automatic 46RE
		84 = Quad Cab (131 WB)	EML = 5.0L 8 Cylinder	DDC = 5 Speed HD Manual
			EVA = 4.7L Magnum V8	DDK = 5 Speed HD Manual
			EP0 = All 2.5L	DG4 = Multispeed Automatic 45RFE
			EH0 = All 3.9L	DG0 = All Automatic Transmissions
			EM0 = All 5.9L	DBB = All Manual Transmissions
			EV0 = All 4.7L	

Group - 3500

Manual Transmission 5 Speed

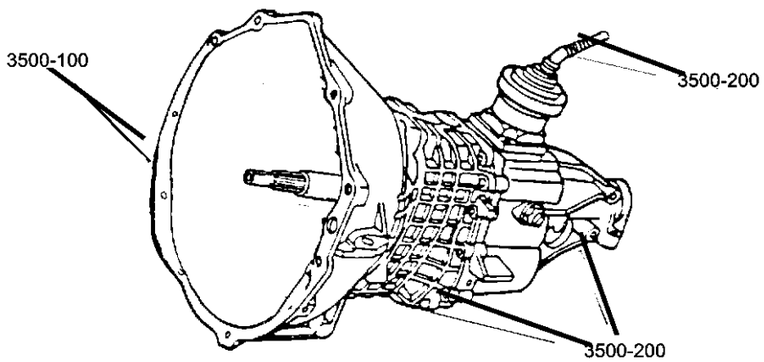

3500-100 Transmission Assembly 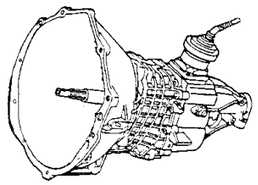	**3500-1200** Gearshift Controls 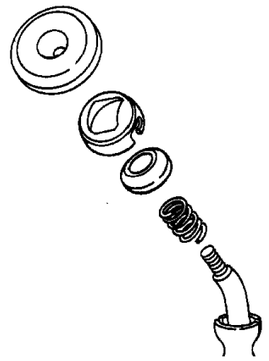	**3500-200** Case and Extension 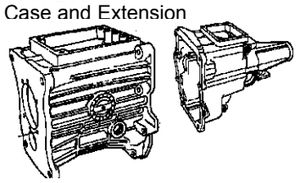	**3500-400** Gear Train 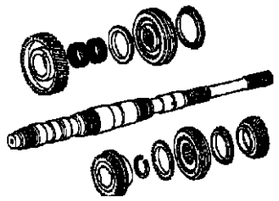
3500-900 Fork and Rails 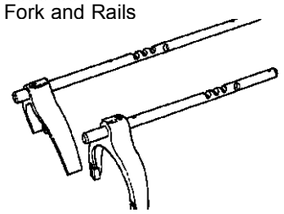			

Group - 3500 Manual Transmission 5 Speed

Illustration Title — Group-Fig. No.

Transmission Assembly
Assembly, Transmission [DDC] ..... Fig. 3500 - 110

Case and Extension
Case & Extension [DDC] ..... Fig. 3500 - 210

Gear Train
Gear Train [DDC] ..... Fig. 3500 - 410

Fork and Rails
Forks & Rail [DDC] ..... Fig. 3500 - 910

Gearshift Controls
Control, Gearshift [DDC] ..... Fig. 3500 - 1210

Assembly, Transmission [DDC]
Figure 3500-110

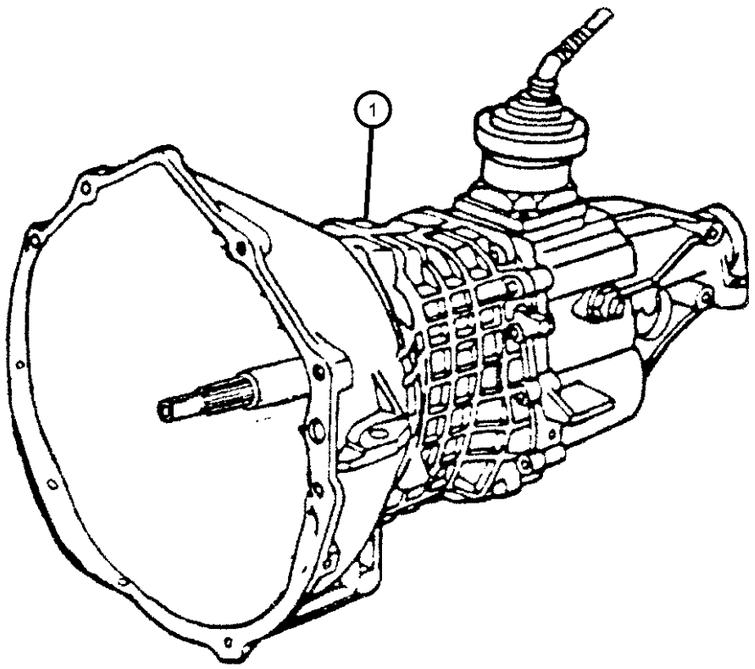

ITEM	PART NUMBER	QTY	LINE	SERIES	BODY	ENGINE	TRANS	TRIM	DESCRIPTION
NOTE:									
Sales Codes:									
[DBB]=All Manual Transmissions									
[EH0]=All 3.9L V6 Engines									
[EV0]=All 4.7L V8 Engines									
1									TRANSMISSION, 5 Speed
	52108228AD	1	1			EH0, EV0	DBB		
	04874464								Mopar Manual Transmission Fluid
	52108229AD	1	5			EH0, EV0	DBB		
	04874464								Mopar Manual Transmission Fluid

DAKOTA (AN)

SERIES	LINE	BODY	ENGINE	TRANSMISSION
L = Dakota (All)	1 = Dakota 2WD	61 = Regular Cab (112 WB)	EPE = 2.5L 4 Cylinder	DGK = 4 Speed Automatic 42RE
	5 = Dakota 4WD	31 = Club Cab (131 WB)	EHC = 3.9L 6 Cylinder	DGT = 4 Speed Automatic 46RE
		84 = Quad Cab (131 WB)	EML = 5.0L 8 Cylinder	DDC = 5 Speed HD Manual
			EVA = 4.7L Magnum V8	DDK = 5 Speed HD Manual
			EP0 = All 2.5L	DG4 = Multispeed Automatic 45RFE
			EH0 = All 3.9L	DG0 = All Automatic Transmissions
			EM0 = All 5.9L	DBB = All Manual Transmissions
			EV0 = All 4.7L	

Case & Extension [DDC]
Figure 3500-210

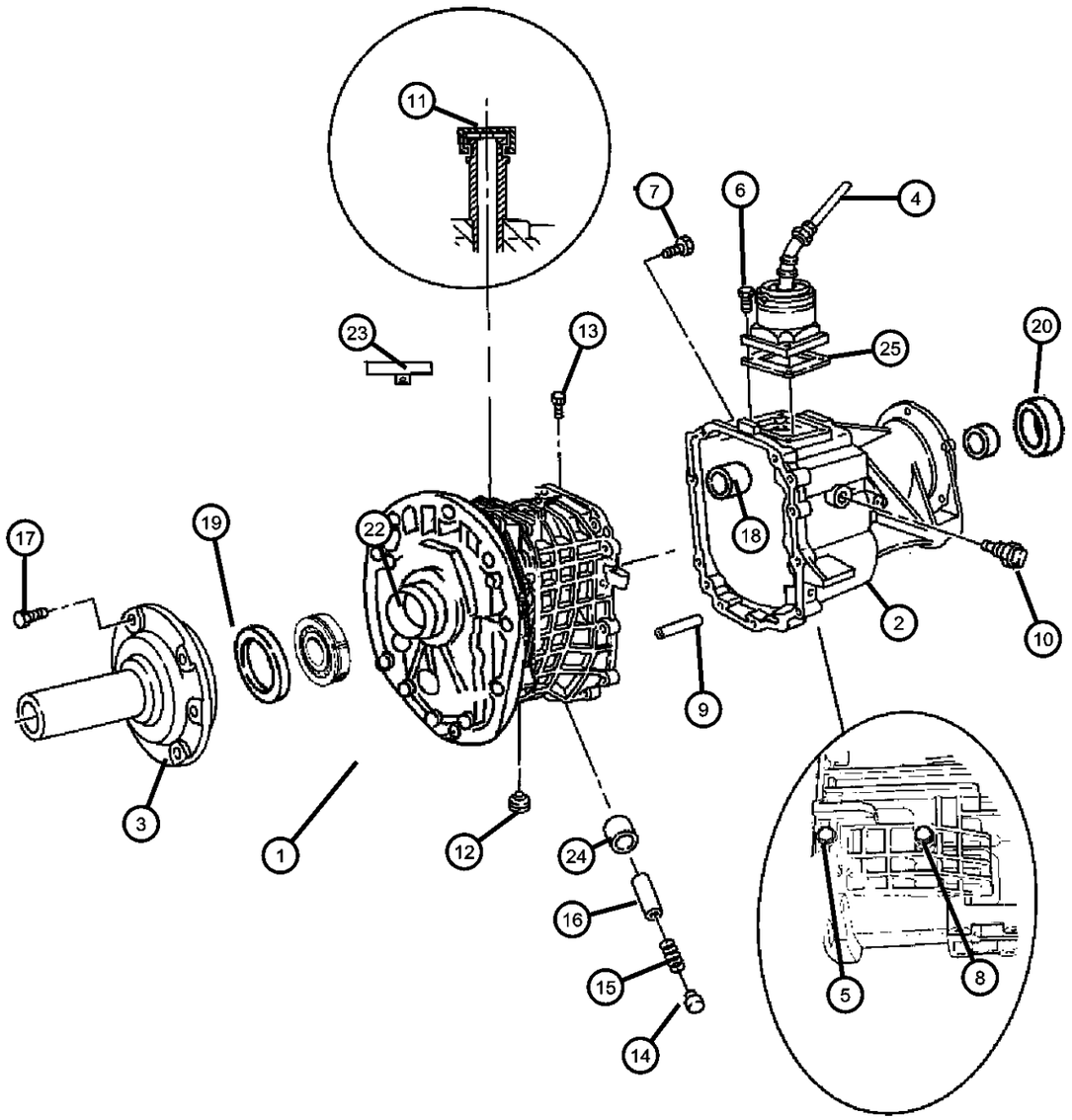

ITEM	PART NUMBER	QTY	LINE	SERIES	BODY	ENGINE	TRANS	TRIM	DESCRIPTION
NOTE:									
Sales Codes:									
[DBB]=All Manual Transmissions									
[EH0]=All 3.9L V-6 Engines									
[EV0]=All 47.L V-8 Engines									
1									CASE, Transmission
	05066234AA	1	1			EH0, EV0	DBB		Front
		1	5			EH0, EV0	DBB		Front
2									CASE, Transmission Rear
	05019022AB	1	1			EH0, EV0	DBB		
	05019033AB	1	5			EH0, EV0	DBB		
3									RETAINER, Shaft
	05066232AA	1	1			EH0, EV0	DBB		
		1	5			EH0, EV0	DBB		
4									LEVER, Gearshift
	05018821AA	1	1			EH0, EV0	DBB		
	05018822AA	1	5			EH0, EV0	DBB		
5									BOLT, M8-1.25x70
	04741313	1	1			EH0, EV0	DBB		
		1	5			EH0, EV0	DBB		
6									BOLT, Hex Head
	04741144	4	1			EH0, EV0	DBB		
		4	5			EH0, EV0	DBB		
7									BOLT, Hex Head, M8x1.25x50
	04741123	11	1			EH0, EV0	DBB		
		11	5			EH0, EV0	DBB		
8									BOLT, Hex
	04741115	3	1			EH0, EV0	DBB		
		3	5			EH0, EV0	DBB		
9									PIN, Locating
	04741122	2	1			EH0, EV0	DBB		
		2	5			EH0, EV0	DBB		
10									SWITCH, Back Up Lamp
	56007163	1	1			EH0, EV0	DBB		

DAKOTA (AN)

SERIES	LINE	BODY	ENGINE	TRANSMISSION
L = Dakota (All)	1 = Dakota 2WD	61 = Regular Cab (112 WB)	EPE = 2.5L 4 Cylinder	DGK = 4 Speed Automatic 42RE
	5 = Dakota 4WD	31 = Club Cab (131 WB)	EHC = 3.9L 6 Cylinder	DGT = 4 Speed Automatic 46RE
		84 = Quad Cab (131 WB)	EML = 5.0L 8 Cylinder	DDC = 5 Speed HD Manual
			EVA = 4.7L Magnum V8	DDK = 5 Speed HD Manual
			EP0 = All 2.5L	DG4 = Multispeed Automatic 45RFE
			EH0 = All 3.9L	DG0 = All Automatic Transmissions
			EM0 = All 5.9L	DBB = All Manual Transmissions
			EV0 = All 4.7L	

Case & Extension [DDC]
Figure 3500-210

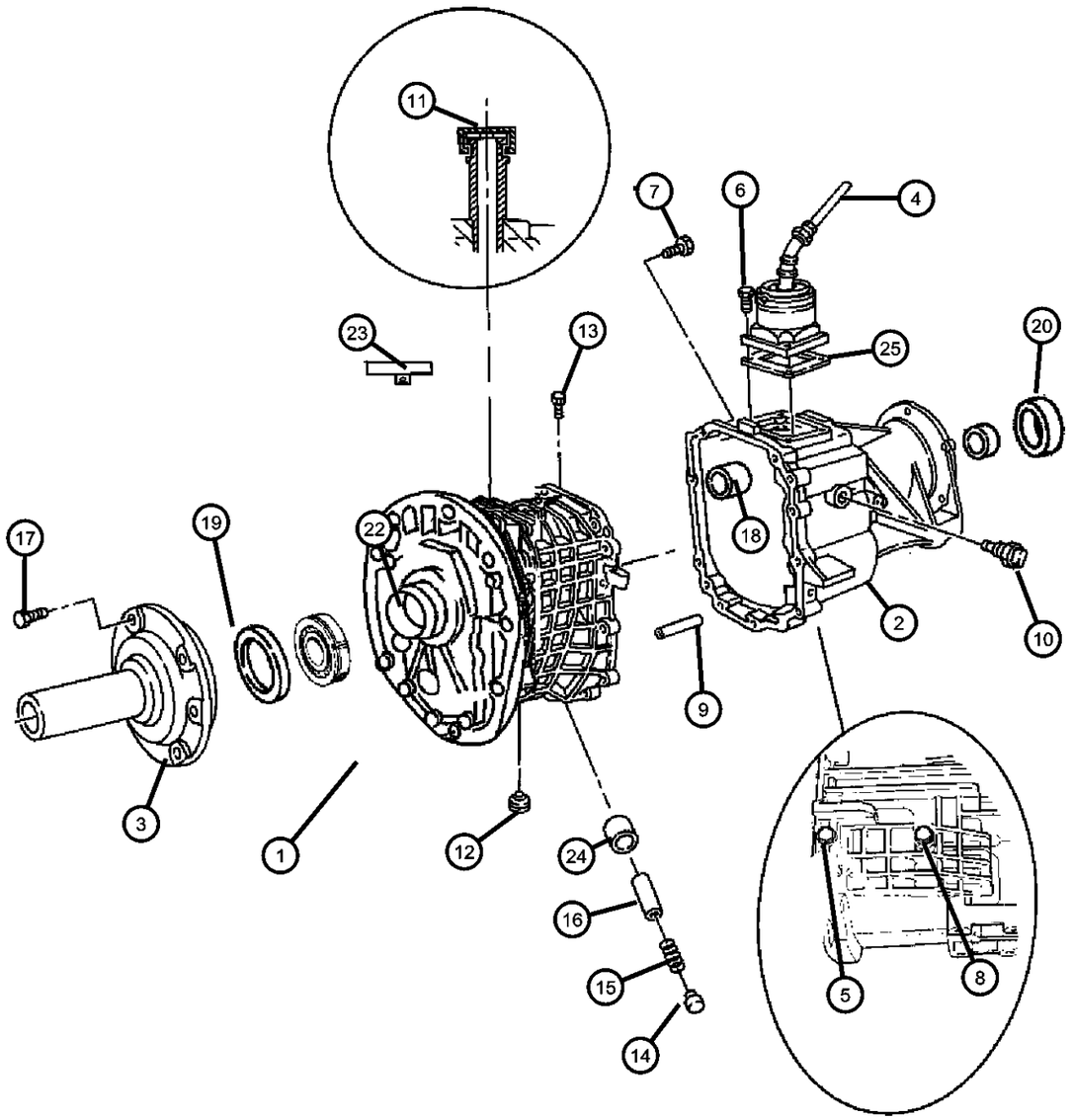

ITEM	PART NUMBER	QTY	LINE	SERIES	BODY	ENGINE	TRANS	TRIM	DESCRIPTION
		1	5			EH0, EV0	DBB		
11									VENT, Transmission
	04740901	1	1			EH0, EV0	DBB		
		1	5			EH0, EV0	DBB		
12									PLUG, Oil Fill
	04882280	1	1			EH0, EV0	DBB		
		1	5			EH0, EV0	DBB		
13									PIN, Detent
	04740904	1	1			EH0, EV0	DBB		
		1	5			EH0, EV0	DBB		
14									CAP, Detent
	04741128	1	1			EH0, EV0	DBB		
		1	5			EH0, EV0	DBB		
15									SPRING, Shift Detent
	04746095	1	1			EH0, EV0	DBB		
		1	5			EH0, EV0	DBB		
16									PLUNGER
	05016233AA	1	1			EH0, EV0	DBB		
		1	5			EH0, EV0	DBB		
17									BOLT, Hex Head, M6x1.00x25
	04741300	6	1			EH0, EV0	DBB		
		6	5			EH0, EV0	DBB		
18									BEARING, Ball
	04741112	1	1			EH0, EV0	DBB		
		1	5			EH0, EV0	DBB		
19									SEAL, Input Shaft
	04741296	1	1			EH0, EV0	DBB		
		1	5			EH0, EV0	DBB		
20	04741118	1	5			EH0, EV0	DBB		SEAL, Output Shaft
-21	04531216AB	1	1			EH0, EV0	DBB		SEAL, Output Shaft
22									BEARING, Input Shaft
	04874174	1	1			EH0, EV0	DBB		

DAKOTA (AN)

SERIES	LINE	BODY	ENGINE	TRANSMISSION
L = Dakota (All)	1 = Dakota 2WD	61 = Regular Cab (112 WB)	EPE = 2.5L 4 Cylinder	DGK = 4 Speed Automatic 42RE
	5 = Dakota 4WD	31 = Club Cab (131 WB)	EHC = 3.9L 6 Cylinder	DGT = 4 Speed Automatic 46RE
		84 = Quad Cab (131 WB)	EML = 5.0L 8 Cylinder	DDC = 5 Speed HD Manual
			EVA = 4.7L Magnum V8	DDK = 5 Speed HD Manual
			EP0 = All 2.5L	DG4 = Multispeed Automatic 45RFE
			EH0 = All 3.9L	DG0 = All Automatic Transmissions
			EM0 = All 5.9L	DBB = All Manual Transmissions
			EV0 = All 4.7L	

AR = use ase required - = Non illustrrated part

Case & Extension [DDC]
Figure 3500-210

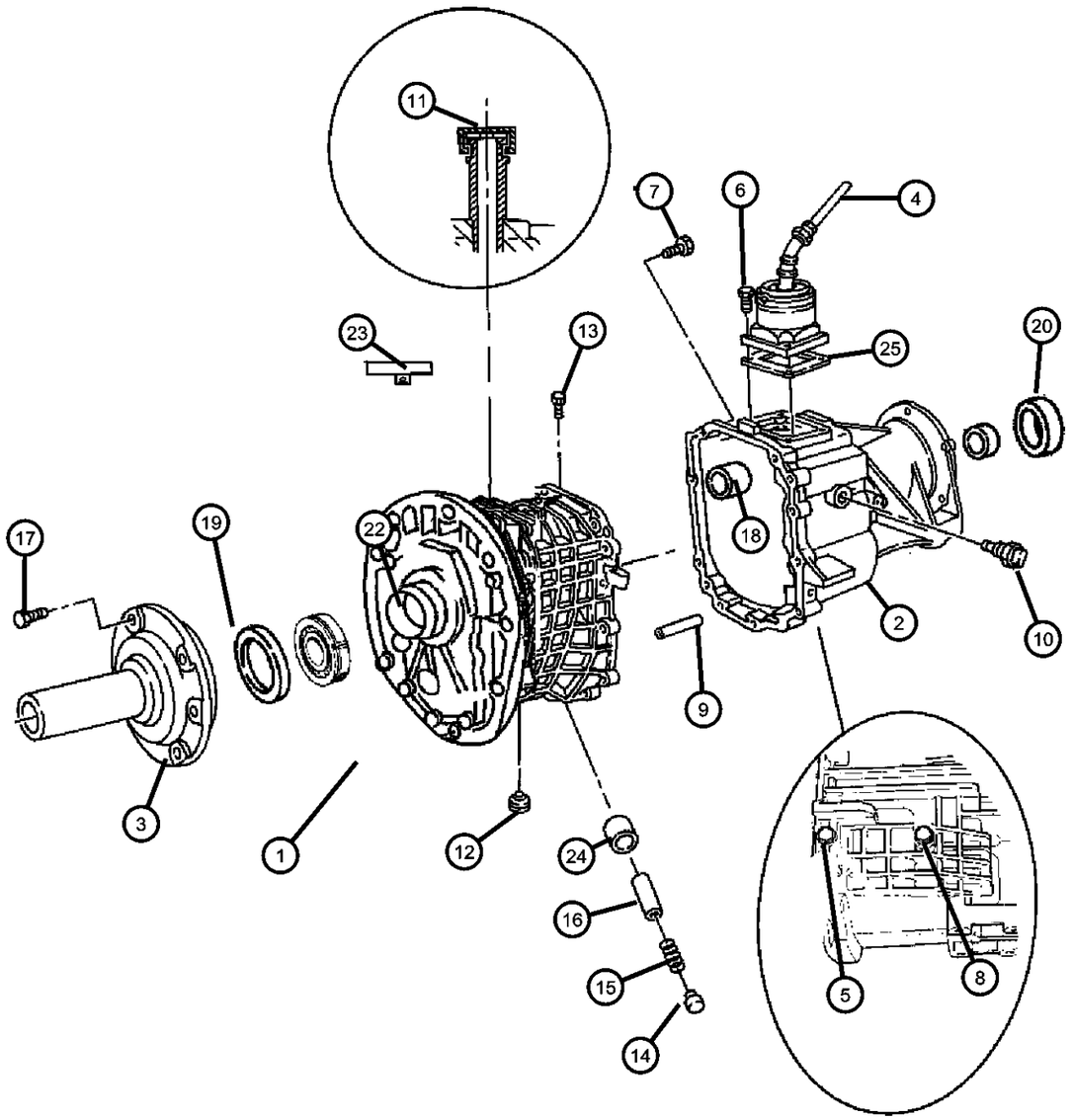

ITEM	PART NUMBER	QTY	LINE	SERIES	BODY	ENGINE	TRANS	TRIM	DESCRIPTION
		1	5			EH0, EV0	DBB		
23									VENT, Transmission
	04740902	1	1			EH0, EV0	DBB		
		1	5			EH0, EV0	DBB		
24									BUSHING, Transmission
	05012337AA	1	1			EH0, EV0	DBB		
		1	5			EH0, EV0	DBB		
25									SEAL, Shift Lever
	04886153AA	1	1			EH0, EV0	DBB		
		1	5			EH0, EV0	DBB		

DAKOTA (AN)

SERIES	LINE	BODY	ENGINE	TRANSMISSION
L = Dakota (All)	1 = Dakota 2WD	61 = Regular Cab (112 WB)	EPE = 2.5L 4 Cylinder	DGK = 4 Speed Automatic 42RE
	5 = Dakota 4WD	31 = Club Cab (131 WB)	EHC = 3.9L 6 Cylinder	DGT = 4 Speed Automatic 46RE
		84 = Quad Cab (131 WB)	EML = 5.0L 8 Cylinder	DDC = 5 Speed HD Manual
			EVA = 4.7L Magnum V8	DDK = 5 Speed HD Manual
			EP0 = All 2.5L	DG4 = Multispeed Automatic 45RFE
			EH0 = All 3.9L	DG0 = All Automatic Transmissions
			EM0 = All 5.9L	DBB = All Manual Transmissions
			EV0 = All 4.7L	

AR = use ase required - = Non illustrrated part

Gear Train [DDC]
Figure 3500-410

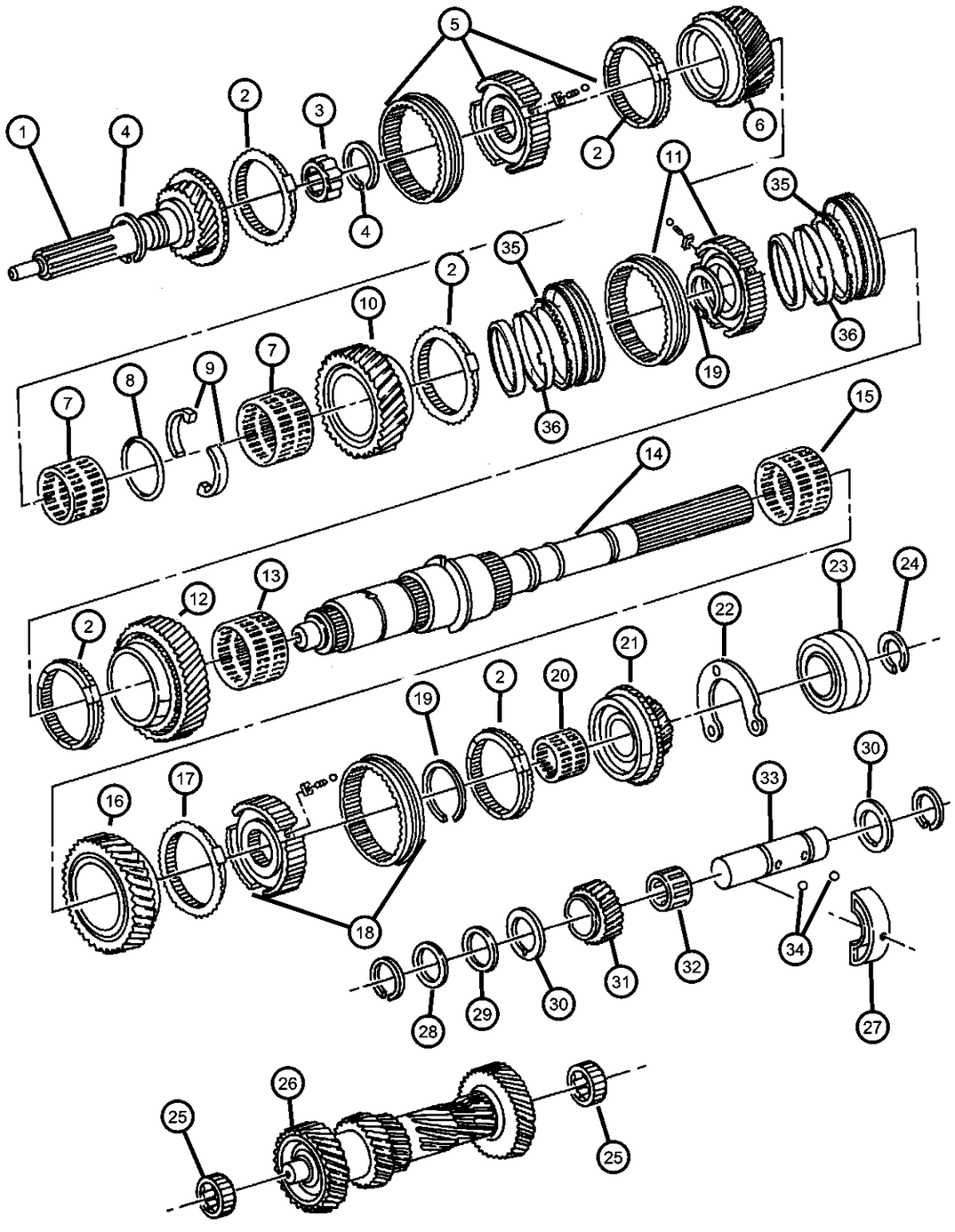

ITEM	PART NUMBER	QTY	LINE	SERIES	BODY	ENGINE	TRANS	TRIM	DESCRIPTION
NOTE: Sales Codes: [DBB]=All Manual Transmissions [EH0]=All 3.9L V-6 Engines [EV0]=All 4.7L V-8 Engines									
1									INPUT SHAFT, Transmission
	05066238AA	1	1			EH0, EV0	DBB		
		1	5			EH0, EV0	DBB		
2									STOP RING, Synchronizer
	04741277	3	1			EH0, EV0	DBB		
		3	5			EH0, EV0	DBB		
3									NEEDLE BEARING, Input Shaft
	04741878	1	1			EH0, EV0	DBB		
		1	5			EH0, EV0	DBB		
4									SNAP RING, Output Shaft Bearing
	04741266	1	1			EH0, EV0	DBB		
		1	5			EH0, EV0	DBB		
5									SYNCHRONIZER, Third and Fourth
	04741293AB	1	1			EH0, EV0	DBB		
		1	5			EH0, EV0	DBB		
6									GEAR, Third
	04883718AB	1	1			EH0, EV0	DBB		
		1	5			EH0, EV0	DBB		
7									NEEDLE BEARING, Second Gear
	05003039AA	1	1			EH0, EV0	DBB		
		1	5			EH0, EV0	DBB		
8									SNAP RING
	04897922AA	1	1			EH0, EV0	DBB		
		1	5			EH0, EV0	DBB		
9									THRUST WASHER, Second And Third Gear
	04746070	2	1			EH0, EV0	DBB		
		2	5			EH0, EV0	DBB		
10									GEAR, Second

DAKOTA (AN)

SERIES	LINE	BODY	ENGINE	TRANSMISSION
L = Dakota (All)	1 = Dakota 2WD 5 = Dakota 4WD	61 = Regular Cab (112 WB) 31 = Club Cab (131 WB) 84 = Quad Cab (131 WB)	EPE = 2.5L 4 Cylinder EHC = 3.9L 6 Cylinder EML = 5.0L 8 Cylinder EVA = 4.7L Magnum V8 EP0 = All 2.5L EH0 = All 3.9L EM0 = All 5.9L EV0 = All 4.7L	DGK = 4 Speed Automatic 42RE DGT = 4 Speed Automatic 46RE DDC = 5 Speed HD Manual DDK = 5 Speed HD Manual DG4 = Multispeed Automatic 45RFE DG0 = All Automatic Transmissions DBB = All Manual Transmissions

Gear Train [DDC]
Figure 3500-410

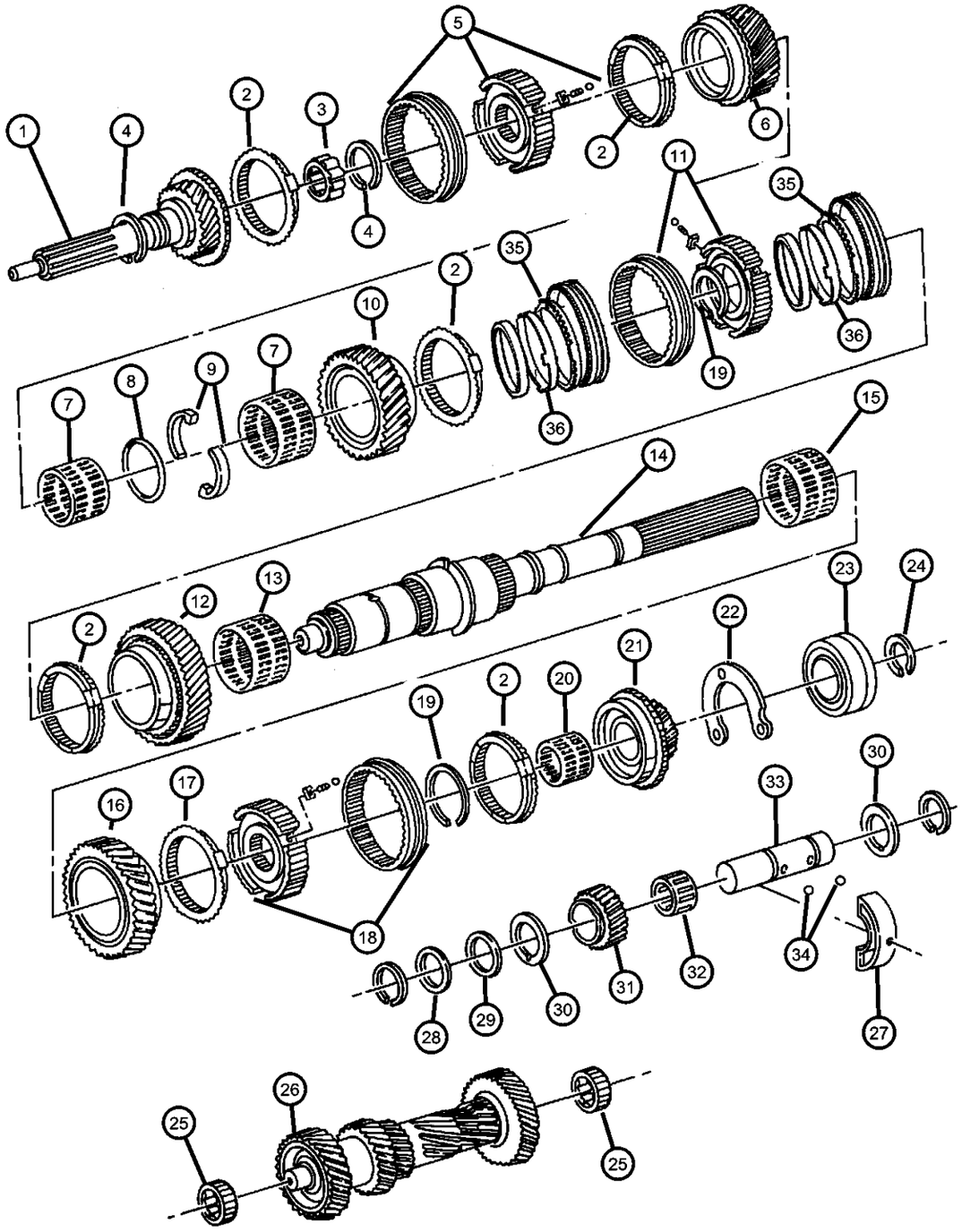

ITEM	PART NUMBER	QTY	LINE	SERIES	BODY	ENGINE	TRANS	TRIM	DESCRIPTION
	04874358AB	1	1			EH0, EV0	DBB		
		1	5			EH0, EV0	DBB		
11									SYNCHRONIZER, First and Second
	04874356AB	1	1			EH0, EV0	DBB		
		1	5			EH0, EV0	DBB		
12									GEAR, First
	04874355AB	1	1			EH0, EV0	DBB		
		1	5			EH0, EV0	DBB		
13									NEEDLE BEARING, Transmission
	04741871	1	1			EH0, EV0	DBB		
		1	5			EH0, EV0	DBB		
14									SHAFT, Output
	04874309	1	5			EH0, EV0	DBB		
	05003288AA	1	1			EH0, EV0	DBB		
15									NEEDLE BEARING, Transmission
	04741871	1	1			EH0, EV0	DBB		
		1	5			EH0, EV0	DBB		
16									GEAR, Reverse
	04741284AB	1	1			EH0, EV0	DBB		
		1	5			EH0, EV0	DBB		
17									STOP RING, Synchronizer
	04741285	1	1			EH0, EV0	DBB		
		1	5			EH0, EV0	DBB		
18									SYNCHRONIZER, Fifth And Reverse
	04741278AB	1	1			EH0, EV0	DBB		
		1	5			EH0, EV0	DBB		
19									RING, Transmission
	04741805	2	5			EH0, EV0	DBB		
		1	5			EH0, EV0	DBB		
20									BEARING, Needle
	04741273	1	1			EH0, EV0	DBB		

DAKOTA (AN)

SERIES	LINE	BODY	ENGINE	TRANSMISSION
L = Dakota (All)	1 = Dakota 2WD	61 = Regular Cab (112 WB)	EPE = 2.5L 4 Cylinder	DGK = 4 Speed Automatic 42RE
	5 = Dakota 4WD	31 = Club Cab (131 WB)	EHC = 3.9L 6 Cylinder	DGT = 4 Speed Automatic 46RE
		84 = Quad Cab (131 WB)	EML = 5.0L 8 Cylinder	DDC = 5 Speed HD Manual
			EVA = 4.7L Magnum V8	DDK = 5 Speed HD Manual
			EP0 = All 2.5L	DG4 = Multispeed Automatic 45RFE
			EH0 = All 3.9L	DG0 = All Automatic Transmissions
			EM0 = All 5.9L	DBB = All Manual Transmissions
			EV0 = All 4.7L	

Gear Train [DDC]
Figure 3500-410

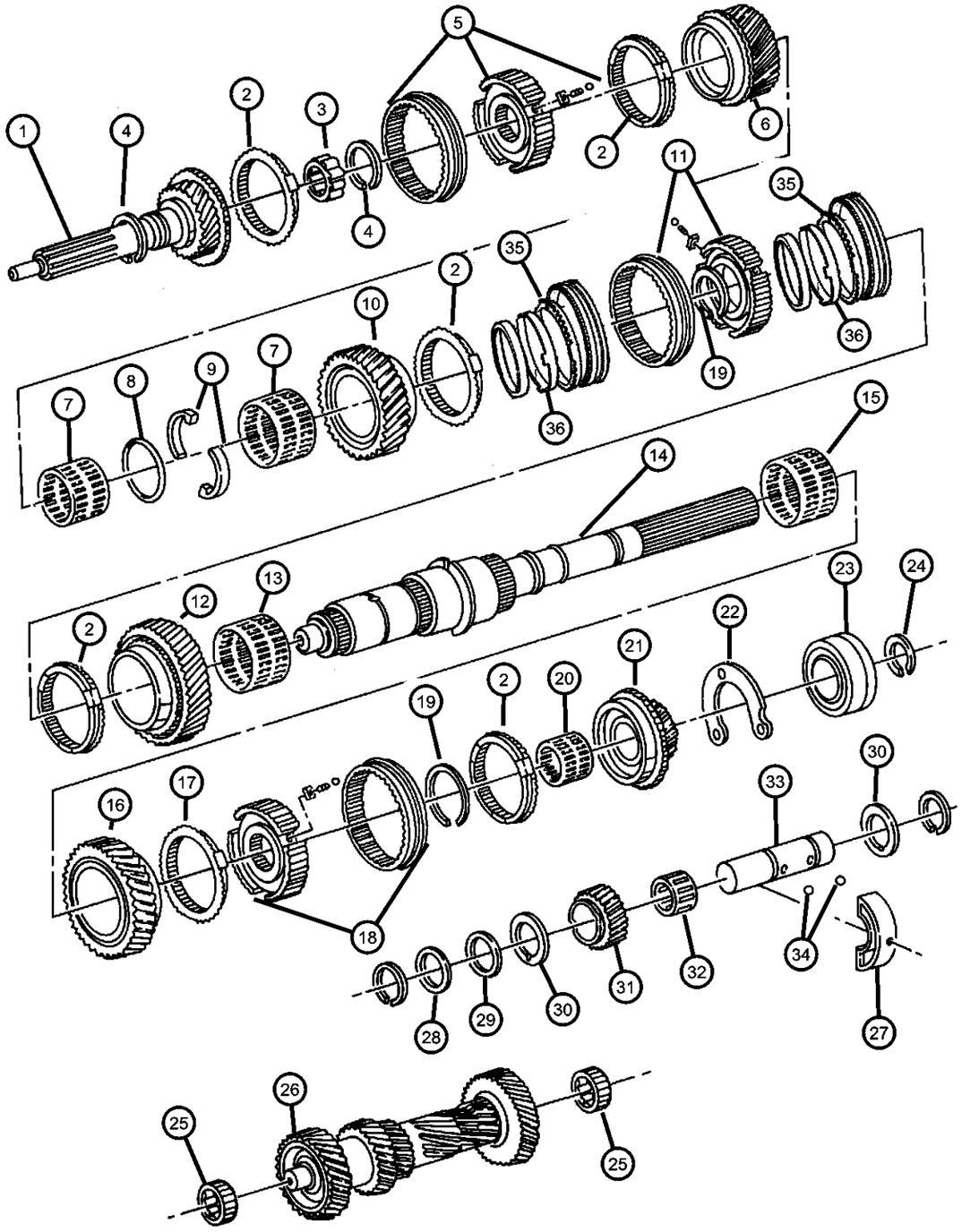

ITEM	PART NUMBER	QTY	LINE	SERIES	BODY	ENGINE	TRANS	TRIM	DESCRIPTION
		1	5			EH0, EV0	DBB		
21									GEAR, Fifth
	04883300AB	1	1			EH0, EV0	DBB		
		1	5			EH0, EV0	DBB		
22									RETAINER, Transmission Output Shaft Bearing
	04741114	1	5			EH0, EV0	DBB		
	04741116	1	1			EH0, EV0	DBB		
23									BEARING, Output Shaft
	04741866	1	1			EH0, EV0	DBB		
		1	5			EH0, EV0	DBB		
24									SNAP RING, Output Shaft Bearing
	04741266	1	1			EH0, EV0	DBB		
		1	5			EH0, EV0	DBB		
25									BEARING, Countershaft
	04740900	2	1			EH0, EV0	DBB		
		1	5			EH0, EV0	DBB		
26									SHAFT, Counter
	04741299	1	1			EH0, EV0	DBB		
		1	5			EH0, EV0	DBB		
27									SUPPORT, Segment Idler Shaft
	04741312	1	1			EH0, EV0	DBB		
		1	5			EH0, EV0	DBB		
28									WASHER, Flat
	04741310	1	1			EH0, EV0	DBB		
		1	5			EH0, EV0	DBB		
29									WASHER, Idler Gear
	04741309	1	1			EH0, EV0	DBB		
		1	5			EH0, EV0	DBB		
30									THRUST WASHER, Reverse Idler
	04741307	2	1			EH0, EV0	DBB		
		2	5			EH0, EV0	DBB		
31									GEAR, Reverse Idler

DAKOTA (AN)

SERIES	LINE	BODY	ENGINE	TRANSMISSION
L = Dakota (All)	1 = Dakota 2WD	61 = Regular Cab (112 WB)	EPE = 2.5L 4 Cylinder	DGK = 4 Speed Automatic 42RE
	5 = Dakota 4WD	31 = Club Cab (131 WB)	EHC = 3.9L 6 Cylinder	DGT = 4 Speed Automatic 46RE
		84 = Quad Cab (131 WB)	EML = 5.0L 8 Cylinder	DDC = 5 Speed HD Manual
			EVA = 4.7L Magnum V8	DDK = 5 Speed HD Manual
			EP0 = All 2.5L	DG4 = Multispeed Automatic 45RFE
			EH0 = All 3.9L	DG0 = All Automatic Transmissions
			EM0 = All 5.9L	DBB = All Manual Transmissions
			EV0 = All 4.7L	

Gear Train [DDC]
Figure 3500-410

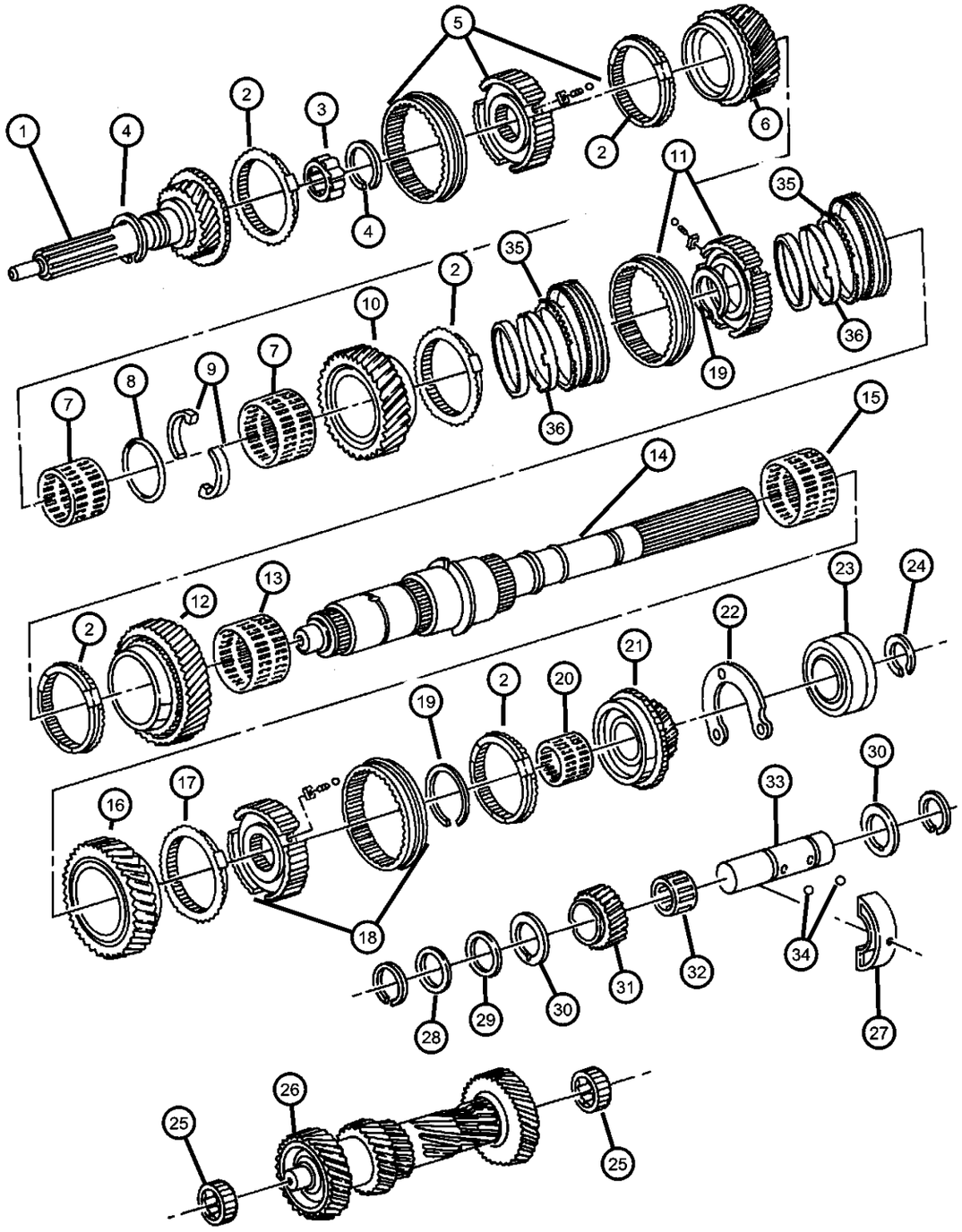

ITEM	PART NUMBER	QTY	LINE	SERIES	BODY	ENGINE	TRANS	TRIM	DESCRIPTION
	04741306	1	1			EH0, EV0	DBB		
		1	5			EH0, EV0	DBB		
32									BEARING, Idler
	04874359	1	1			EH0, EV0	DBB		
		1	5			EH0, EV0	DBB		
33									IDLER SHAFT, Transmission
	04741303	1	1			EH0, EV0	DBB		
		1	5			EH0, EV0	DBB		
34									BALL, Check, 4 mm
	04741891	2	1			EH0, EV0	DBB		
		2	5			EH0, EV0	DBB		
35									RING, Synchronizer Blocker
	04874363	2	1			EH0, EV0	DBB		
		2	5			EH0, EV0	DBB		
36									CONE, Synchronizer
	04874405	2	1			EH0, EV0	DBB		
		2	5			EH0, EV0	DBB		

DAKOTA (AN)

SERIES	LINE	BODY	ENGINE	TRANSMISSION
L = Dakota (All)	1 = Dakota 2WD	61 = Regular Cab (112 WB)	EPE = 2.5L 4 Cylinder	DGK = 4 Speed Automatic 42RE
	5 = Dakota 4WD	31 = Club Cab (131 WB)	EHC = 3.9L 6 Cylinder	DGT = 4 Speed Automatic 46RE
		84 = Quad Cab (131 WB)	EML = 5.0L 8 Cylinder	DDC = 5 Speed HD Manual
			EVA = 4.7L Magnum V8	DDK = 5 Speed HD Manual
			EP0 = All 2.5L	DG4 = Multispeed Automatic 45RFE
			EH0 = All 3.9L	DG0 = All Automatic Transmissions
			EM0 = All 5.9L	DBB = All Manual Transmissions
			EV0 = All 4.7L	

Forks & Rail [DDC]
Figure 3500-910

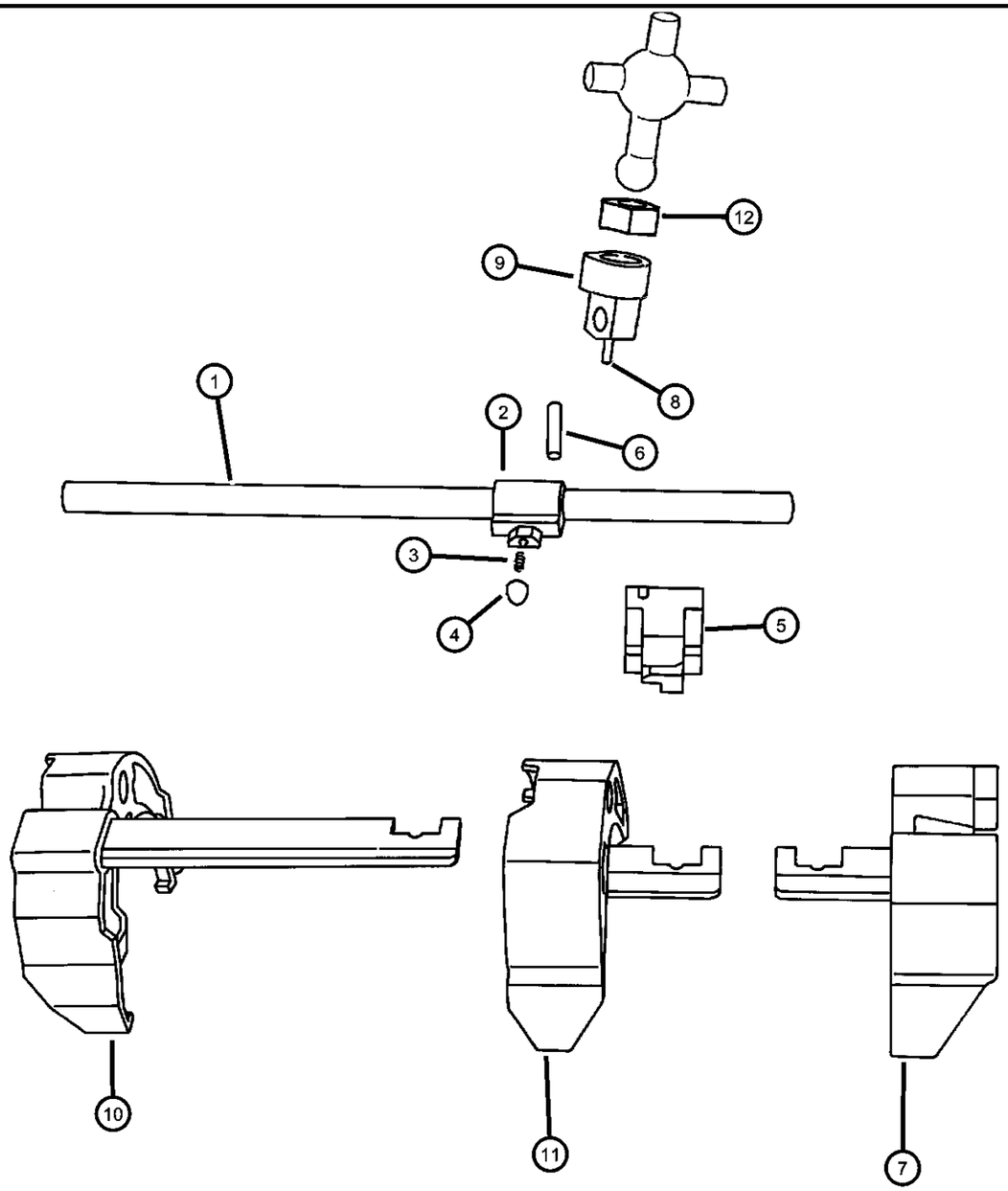

ITEM	PART NUMBER	QTY	LINE	SERIES	BODY	ENGINE	TRANS	TRIM	DESCRIPTION
NOTE:									
Sales Codes:									
[DBB]=All Manual Transmissions									
[EH0]=All 3.9L V-6 Engines									
[EV0]=All 4.7L V-8 Engines									
1									SHAFT, Selector
	05014501AA	1	1			EH0, EV0	DBB		
		1	5			EH0, EV0	DBB		
2									LEVER, Shift Shaft
	05072248AA	1	1			EH0, EV0	DBB		
		1	5			EH0, EV0	DBB		
3									SPRING, Lever
	04741137	3	1			EH0, EV0	DBB		
		3	5			EH0, EV0	DBB		
4									PLUNGER
	05013348AA	1	1			EH0, EV0	DBB		
		1	5			EH0, EV0	DBB		
5									BUSHING, Transmission
	05012337AA	1	1			EH0, EV0	DBB		
		1	5			EH0, EV0	DBB		
6									PIN, Shift Shaft
	04741139	1	1			EH0, EV0	DBB		
		1	5			EH0, EV0	DBB		
7									FORK, Third and Fourth
	05066352AB	1	5			EH0, EV0	DBB		
		1	1			EH0, EV0	DBB		
8									PIN, Shift Shaft
	04741139	1	1			EH0, EV0	DBB		
		1	5			EH0, EV0	DBB		
9									SOCKET, Shift Shaft
	04874352	1	1			EH0, EV0	DBB		
		1	5			EH0, EV0	DBB		
10									FORK, Transmission
	05083104AA	1	5			EH0, EV0	DBB		

DAKOTA (AN)

SERIES	LINE	BODY	ENGINE	TRANSMISSION
L = Dakota (All)	1 = Dakota 2WD	61 = Regular Cab (112 WB)	EPE = 2.5L 4 Cylinder	DGK = 4 Speed Automatic 42RE
	5 = Dakota 4WD	31 = Club Cab (131 WB)	EHC = 3.9L 6 Cylinder	DGT = 4 Speed Automatic 46RE
		84 = Quad Cab (131 WB)	EML = 5.0L 8 Cylinder	DDC = 5 Speed HD Manual
			EVA = 4.7L Magnum V8	DDK = 5 Speed HD Manual
			EP0 = All 2.5L	DG4 = Multispeed Automatic 45RFE
			EH0 = All 3.9L	DG0 = All Automatic Transmissions
			EM0 = All 5.9L	DBB = All Manual Transmissions
			EV0 = All 4.7L	

Forks & Rail [DDC]
Figure 3500-910

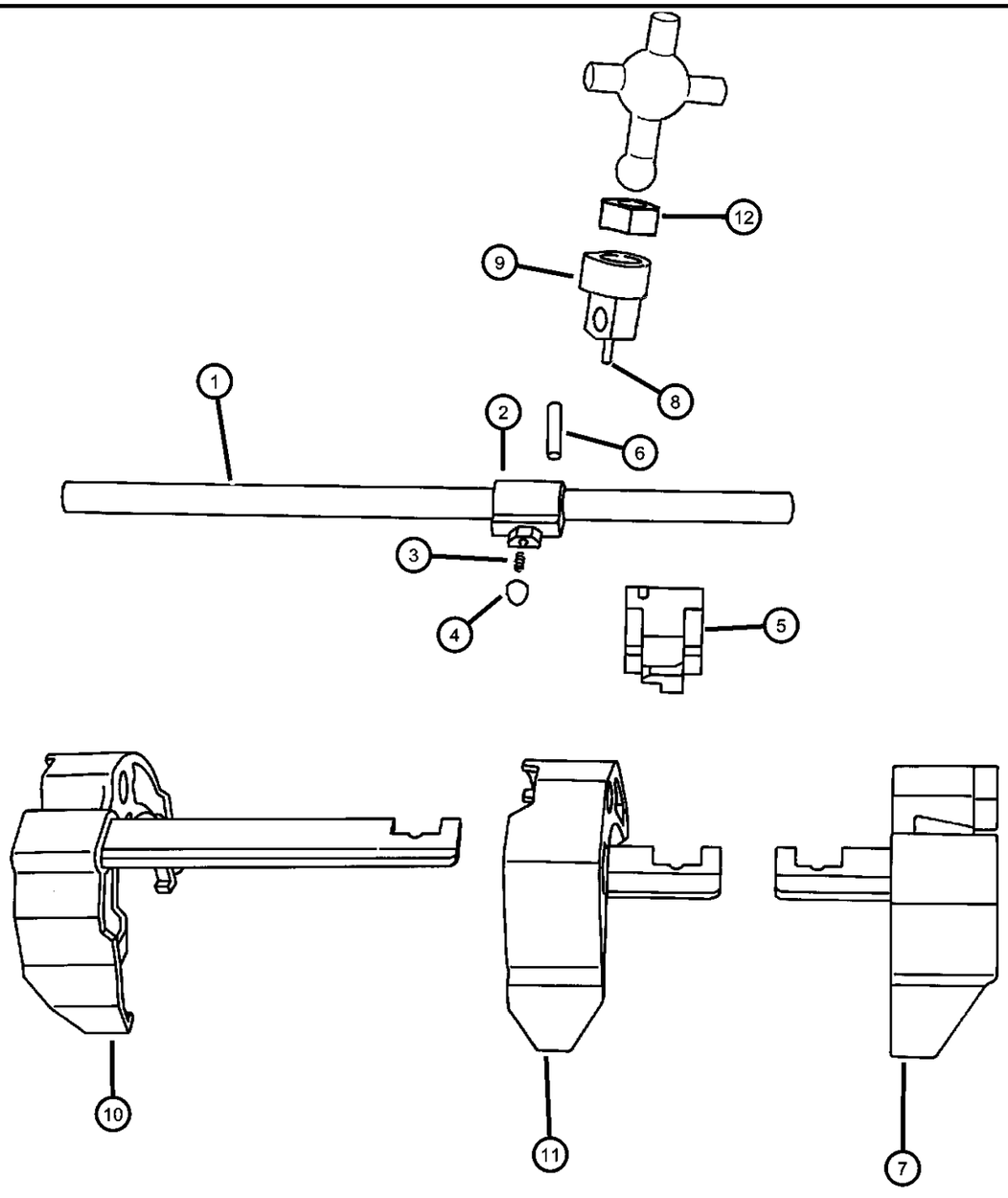

ITEM	PART NUMBER	QTY	LINE	SERIES	BODY	ENGINE	TRANS	TRIM	DESCRIPTION
		1	1			EH0, EV0	DBB		
11									FORK, First and Second
	04886077AB	1	5			EH0, EV0	DBB		
		1	1			EH0, EV0	DBB		
12									ISOLATOR, Shift Lever
	05012020AA	1	1			EH0, EV0	DBB		
		1	5			EH0, EV0	DBB		

DAKOTA (AN)

SERIES	LINE	BODY	ENGINE	TRANSMISSION
L = Dakota (All)	1 = Dakota 2WD	61 = Regular Cab (112 WB)	EPE = 2.5L 4 Cylinder	DGK = 4 Speed Automatic 42RE
	5 = Dakota 4WD	31 = Club Cab (131 WB)	EHC = 3.9L 6 Cylinder	DGT = 4 Speed Automatic 46RE
		84 = Quad Cab (131 WB)	EML = 5.0L 8 Cylinder	DDC = 5 Speed HD Manual
			EVA = 4.7L Magnum V8	DDK = 5 Speed HD Manual
			EP0 = All 2.5L	DG4 = Multispeed Automatic 45RFE
			EH0 = All 3.9L	DG0 = All Automatic Transmissions
			EM0 = All 5.9L	DBB = All Manual Transmissions
			EV0 = All 4.7L	

Control, Gearshift [DDC]
Figure 3500-1210

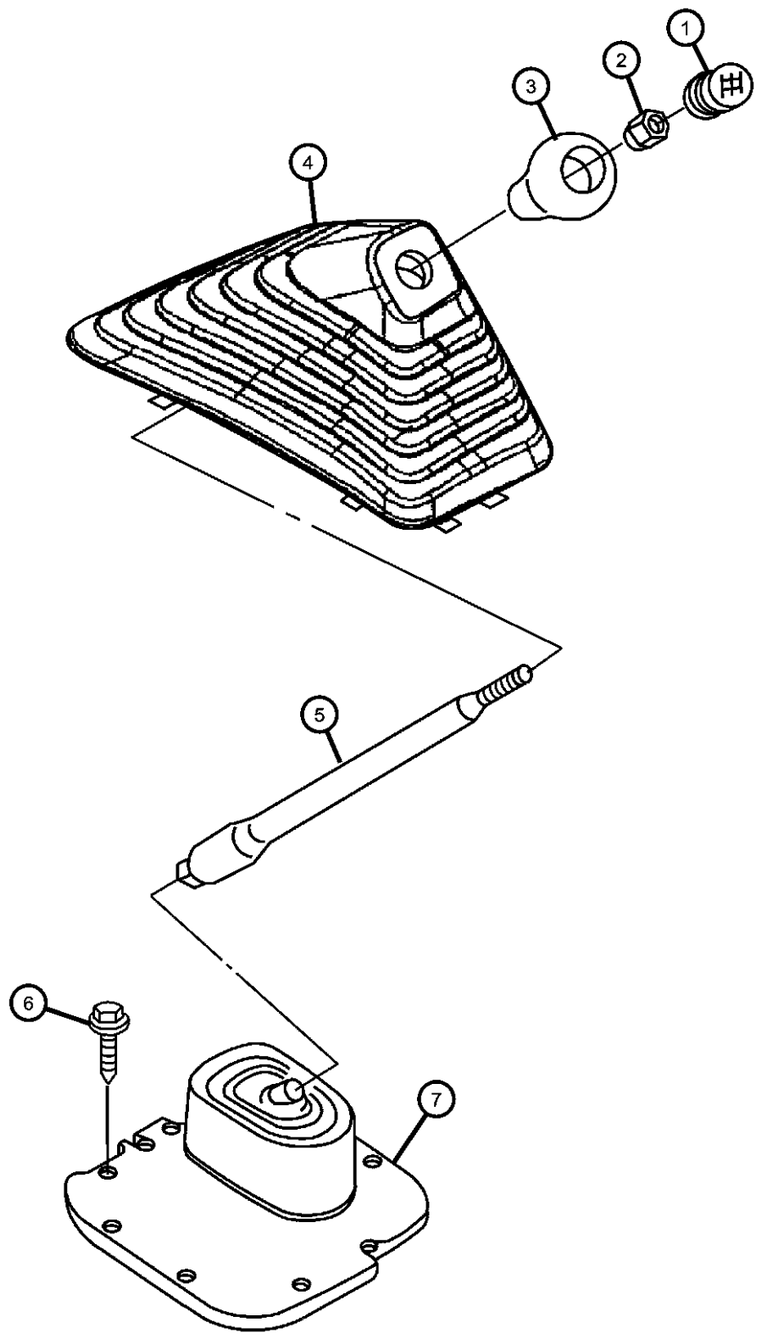

ITEM	PART NUMBER	QTY	LINE	SERIES	BODY	ENGINE	TRANS	TRIM	DESCRIPTION
NOTE:									
Sales Codes:									
[DBB]=All Manual Transmission									
1	04446921	1					DBB		INSERT, Transmission Shift Knob
2	06502556	1					DBB		NUT, Hex, M10-1.5
3	52104174	1					DBB		KNOB, Gearshift
4	52107785AB	1					DBB		BOOT, Gearshift
5	52107843AA	1					DBB		LEVER, Gearshift
6	52107843AA	1							SCREW, (NOT SERVICED)
7	52110006AA	1					DBB		BOOT, Gear Shift Lever

DAKOTA (AN)

SERIES	LINE	BODY	ENGINE	TRANSMISSION
L = Dakota (All)	1 = Dakota 2WD	61 = Regular Cab (112 WB)	EPE = 2.5L 4 Cylinder	DGK = 4 Speed Automatic 42RE
	5 = Dakota 4WD	31 = Club Cab (131 WB)	EHC = 3.9L 6 Cylinder	DGT = 4 Speed Automatic 46RE
		84 = Quad Cab (131 WB)	EML = 5.0L 8 Cylinder	DDC = 5 Speed HD Manual
			EVA = 4.7L Magnum V8	DDK = 5 Speed HD Manual
			EP0 = All 2.5L	DG4 = Multispeed Automatic 45RFE
			EH0 = All 3.9L	DG0 = All Automatic Transmissions
			EM0 = All 5.9L	DBB = All Manual Transmissions
			EV0 = All 4.7L	

Group - NV1500

Manual Transmission 5 Speed

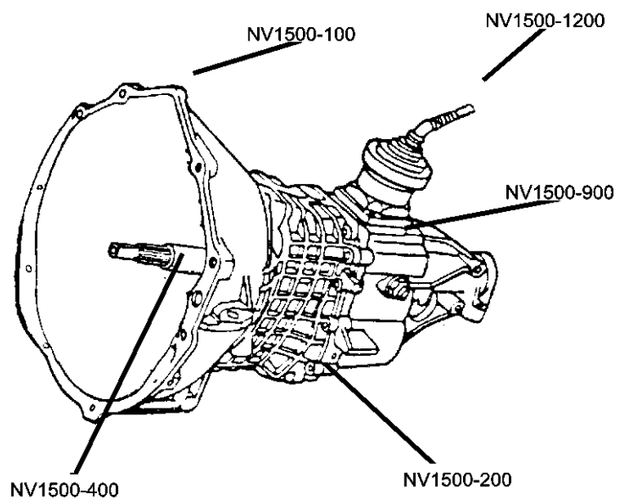

NV1500-100 Transmission Assembly 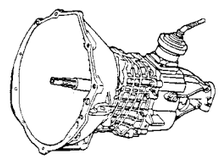	**NV1500-1200** Gearshift Controls 	**NV1500-200** Case and Extension 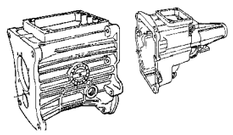	**NV1500-400** Gear Train 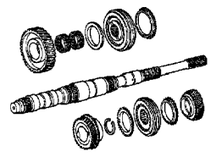
NV1500-900 Fork and Rails 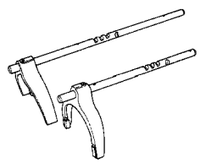			

Group - NV1500 Manual Transmission 5 Speed

Illustration Title — Group-Fig. No.

Transmission Assembly
Transmission [DDK] ..... Fig. NV1500 - 110

Case and Extension
Case & Extension [DDK] ..... Fig. NV1500 - 210

Gear Train
Gear Train [DDK] ..... Fig. NV1500 - 410

Fork and Rails
Fork & Rails [DDK] ..... Fig. NV1500 - 910

Gearshift Controls
Controls, Gearshift [DDK] ..... Fig. NV1500 - 1210

Transmission [DDK]
Figure NV1500-110

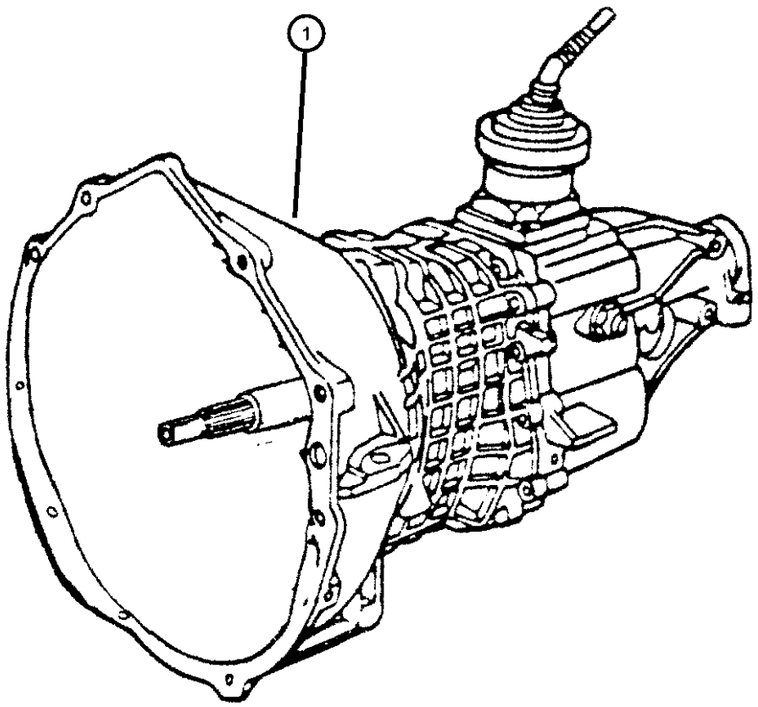

ITEM	PART NUMBER	QTY	LINE	SERIES	BODY	ENGINE	TRANS	TRIM	DESCRIPTION
NOTE:									
Sales Codes:									
[DDK]=NVG 1500 5 Speed Transmissions									
[EP0]=2.5L 4 Cylinder Engine									
1	52108037AF	1	1			EP0	DDK		TRANSMISSION, 5 Speed
	04874464								Mopar Manual Transmission Fluid

DAKOTA (AN)

SERIES	LINE	BODY	ENGINE	TRANSMISSION
L = Dakota (All)	1 = Dakota 2WD	61 = Regular Cab (112 WB)	EPE = 2.5L 4 Cylinder	DGK = 4 Speed Automatic 42RE
	5 = Dakota 4WD	31 = Club Cab (131 WB)	EHC = 3.9L 6 Cylinder	DGT = 4 Speed Automatic 46RE
		84 = Quad Cab (131 WB)	EML = 5.0L 8 Cylinder	DDC = 5 Speed HD Manual
			EVA = 4.7L Magnum V8	DDK = 5 Speed HD Manual
			EP0 = All 2.5L	DG4 = Multispeed Automatic 45RFE
			EH0 = All 3.9L	DG0 = All Automatic Transmissions
			EM0 = All 5.9L	DBB = All Manual Transmissions
			EV0 = All 4.7L	

Case & Extension [DDK]
Figure NV1500-210

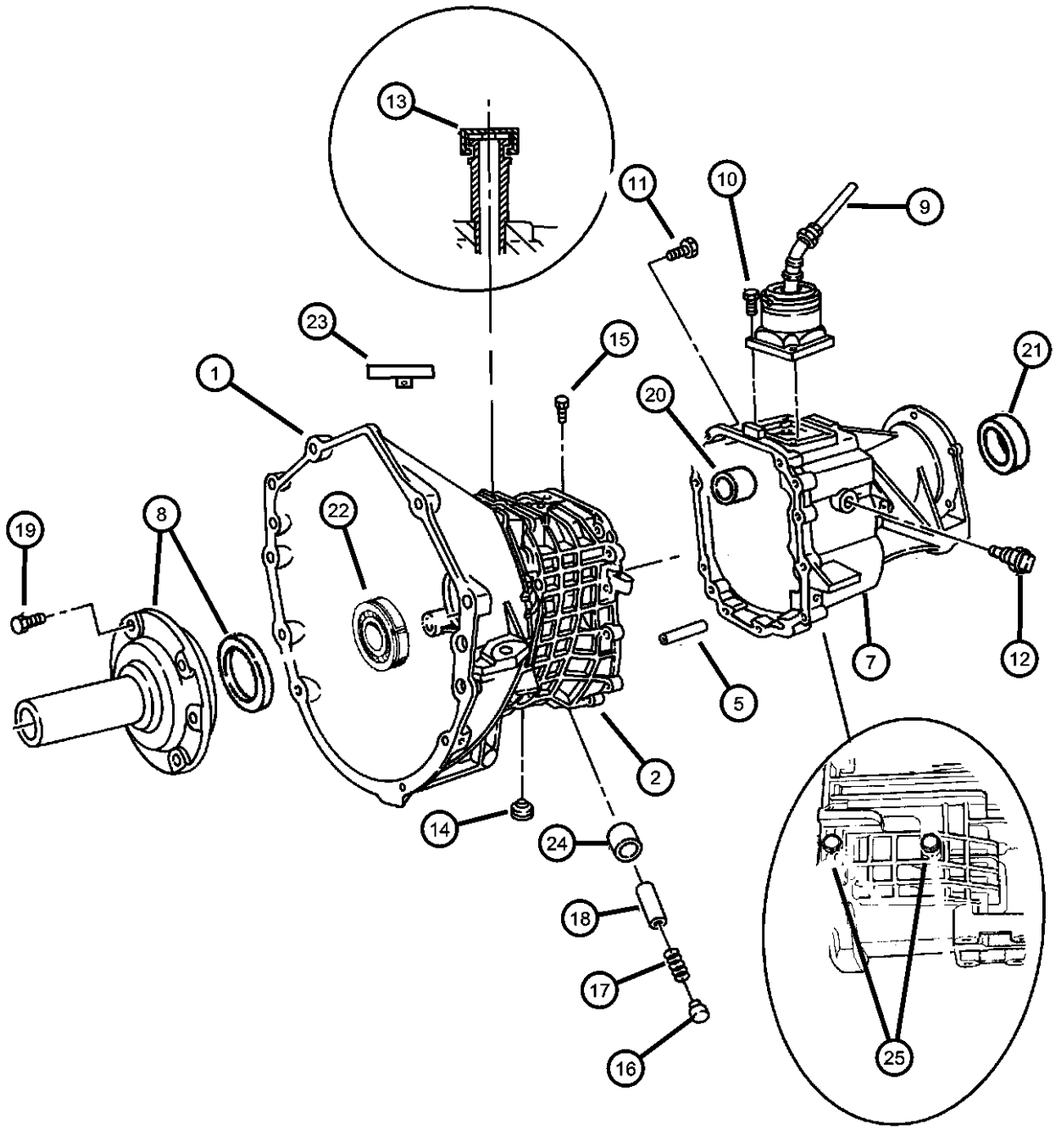

ITEM	PART NUMBER	QTY	LINE	SERIES	BODY	ENGINE	TRANS	TRIM	DESCRIPTION
NOTE:									
Sales Codes:									
[DDK]=NVG 1500 5 Speed Manual Transmissions									
[EP0]=2.5L 4 Cylinder Engine									
1	52107566AB	1	1			EP0	DDK		HOUSING, Clutch
2	05018670AA	1	1			EP0	DDK		CASE, Transmission
-3	04740899	1	1			EP0	DDK		BUSHING, Shift Rail
-4	05013313AA	1	1			EP0	DDK		CUP, Bearing Inner
5	05013314AA	2	1			EP0	DDK		DOWEL, Transmission Case
-6									SHIM
	05013315AA	1	1			EP0	DDK		Thick (.50)
	05013316AA	1	1			EP0	DDK		Thick (.54)
	05013317AA	1	1			EP0	DDK		Thick (.58)
7	05072114AA	1	1			EP0	DDK		CASE, Transmission Rear
8	05013413AA	1	1			EP0	DDK		RETAINER, Shaft
9	05018821AA	1	1			EP0	DDK		LEVER, Gearshift
10	04741144	4	1			EP0	DDK		BOLT, Hex Head
11	05013338AA	10	1			EP0	DDK		BOLT, M8
12	56007163	1	1			EP0	DDK		SWITCH, Back Up Lamp
13	05013319AA	1	1			EP0	DDK		VENT, Transmission
14	04882280	2	1			EP0	DDK		PLUG, Oil Fill
15	05013321AA	1	1			EP0	DDK		PIN, Detent
16	05013339AA	1	1			EP0	DDK		PLUG, Shift Rail
17	05013341AA	1	1			EP0	DDK		SPRING, Shift Detent
18	05015949AA	1	1			EP0	DDK		PLUNGER
19	05013338AA	10	1			EP0	DDK		BOLT, M8
20	05013338AA	10							BEARING, Ball, (NOT SERVICED)
21	05013334AA	1	1			EP0	DDK		SEAL, Output Shaft
22	05013411AA	1	1			EP0	DDK		BEARING, Input Shaft
23	05013319AA	1	1			EP0	DDK		VENT, Transmission
24	05013319AA	1							BUSHING, Detent, (NOT SERVICED)
25	05013329AA	3	1			EP0	DDK		BOLT

DAKOTA (AN)

SERIES	LINE	BODY	ENGINE	TRANSMISSION
L = Dakota (All)	1 = Dakota 2WD	61 = Regular Cab (112 WB)	EPE = 2.5L 4 Cylinder	DGK = 4 Speed Automatic 42RE
	5 = Dakota 4WD	31 = Club Cab (131 WB)	EHC = 3.9L 6 Cylinder	DGT = 4 Speed Automatic 46RE
		84 = Quad Cab (131 WB)	EML = 5.0L 8 Cylinder	DDC = 5 Speed HD Manual
			EVA = 4.7L Magnum V8	DDK = 5 Speed HD Manual
			EP0 = All 2.5L	DG4 = Multispeed Automatic 45RFE
			EH0 = All 3.9L	DG0 = All Automatic Transmissions
			EM0 = All 5.9L	DBB = All Manual Transmissions
			EV0 = All 4.7L	

Gear Train [DDK]
Figure NV1500-410

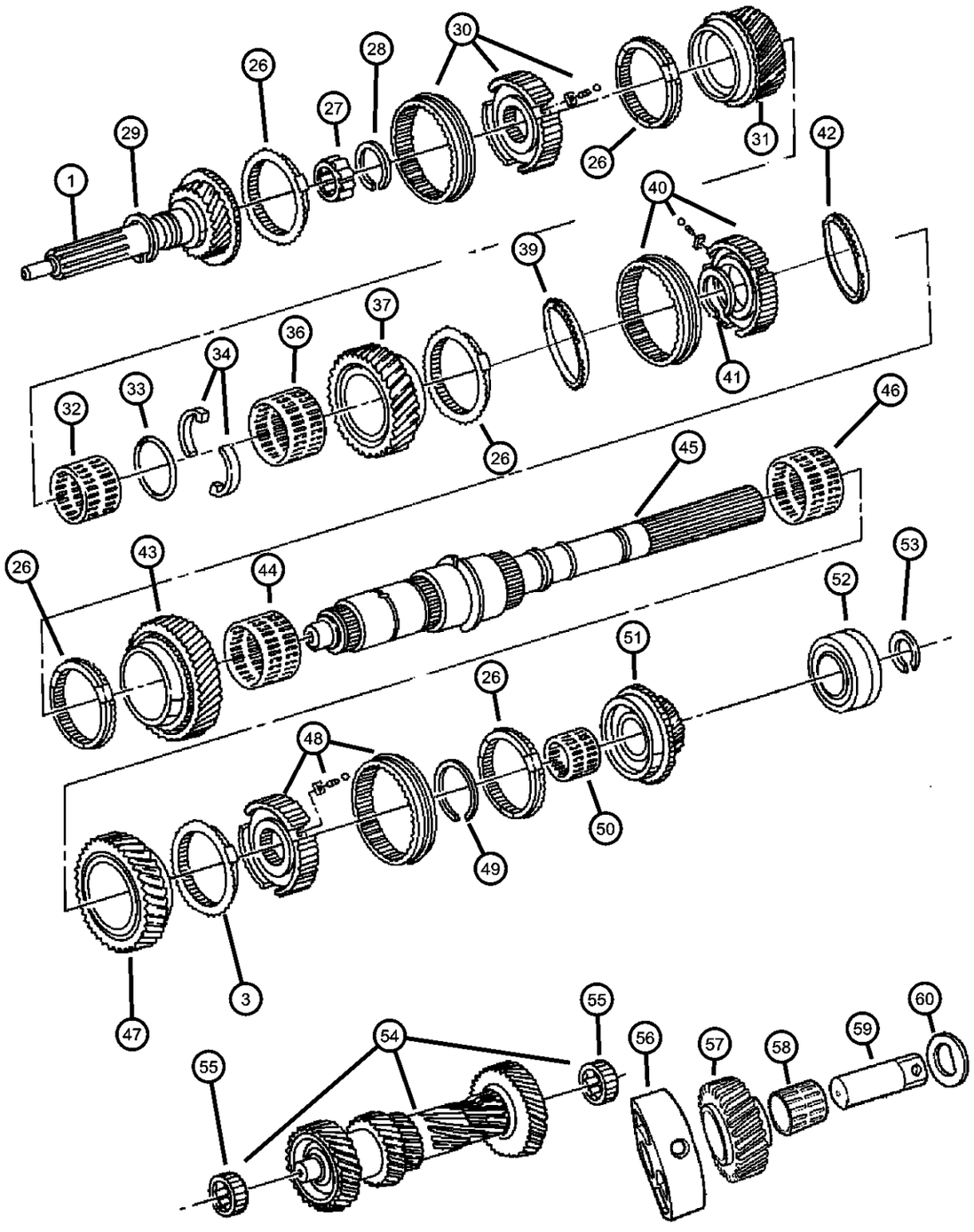

ITEM	PART NUMBER	QTY	LINE	SERIES	BODY	ENGINE	TRANS	TRIM	DESCRIPTION
NOTE:									
Sales Codes:									
[DDK]=MVG1500 5 Speed Manual Transmissions									
[EP0]=All 2.5L 4 Cylinder Engines									
1	05013409AA	1	1			EP0	DDK		SHAFT, Input
-2	05013410AA	1	1			EP0	DDK		NEEDLE BEARING, Input Shaft
3	05013411AA	1	1			EP0	DDK		BEARING, Input Shaft
-4	04202751	1	1			EP0	DDK		SPACER, Input Shaft, 0.62mm(.024")
-5	04202301	1	1			EP0	DDK		SPACER, Input Shaft, 0.66mm(.026")
-6	04202302	1	1			EP0	DDK		SPACER, Input Shaft, 0.70mm(.028")
-7	04202303	1	1			EP0	DDK		SPACER, Input Shaft, 0.74mm(.029")
-8	04202304	1	1			EP0	DDK		SPACER, Input Shaft, 0.78mm(.031")
-9	04202307	1	1			EP0	DDK		SPACER, Input Shaft, 0.90mm(.035")
-10	04202308	1	1			EP0	DDK		SPACER, Input Shaft, 0.94mm(.037")
-11	04202309	1	1			EP0	DDK		SPACER, Input Shaft, 0.98mm(.039")
-12	04202310	1	1			EP0	DDK		SPACER, Input Shaft, 1.02mm(.040")
-13	04202311	1	1			EP0	DDK		SPACER, Input Shaft, 1.06mm(.042")
-14	04202312	1	1			EP0	DDK		SPACER, Input Shaft, 1.10mm(.043")
-15	04202313	1	1			EP0	DDK		SPACER, Input Shaft, 1.14mm(.045")
-16	04202314	1	1			EP0	DDK		SPACER, Input Shaft, 1.18mm(.046")
-17	04202315	1	1			EP0	DDK		SPACER, Input Shaft, 1.22mm(.048")
-18	04202316	1	1			EP0	DDK		SPACER, Input Shaft, 1.26mm(.050")
-19	04202317	1	1			EP0	DDK		SPACER, Input Shaft, 1.30mm(.051")
-20	04202318	1	1			EP0	DDK		SPACER, Input Shaft, 1.34mm(.053")
-21	04202319	1	1			EP0	DDK		SPACER, Input Shaft, 1,38mm(.054")

DAKOTA (AN)

SERIES	LINE	BODY	ENGINE	TRANSMISSION
L = Dakota (All)	1 = Dakota 2WD	61 = Regular Cab (112 WB)	EPE = 2.5L 4 Cylinder	DGK = 4 Speed Automatic 42RE
	5 = Dakota 4WD	31 = Club Cab (131 WB)	EHC = 3.9L 6 Cylinder	DGT = 4 Speed Automatic 46RE
		84 = Quad Cab (131 WB)	EML = 5.0L 8 Cylinder	DDC = 5 Speed HD Manual
			EVA = 4.7L Magnum V8	DDK = 5 Speed HD Manual
			EP0 = All 2.5L	DG4 = Multispeed Automatic 45RFE
			EH0 = All 3.9L	DG0 = All Automatic Transmissions
			EM0 = All 5.9L	DBB = All Manual Transmissions
			EV0 = All 4.7L	

Gear Train [DDK]
Figure NV1500-410

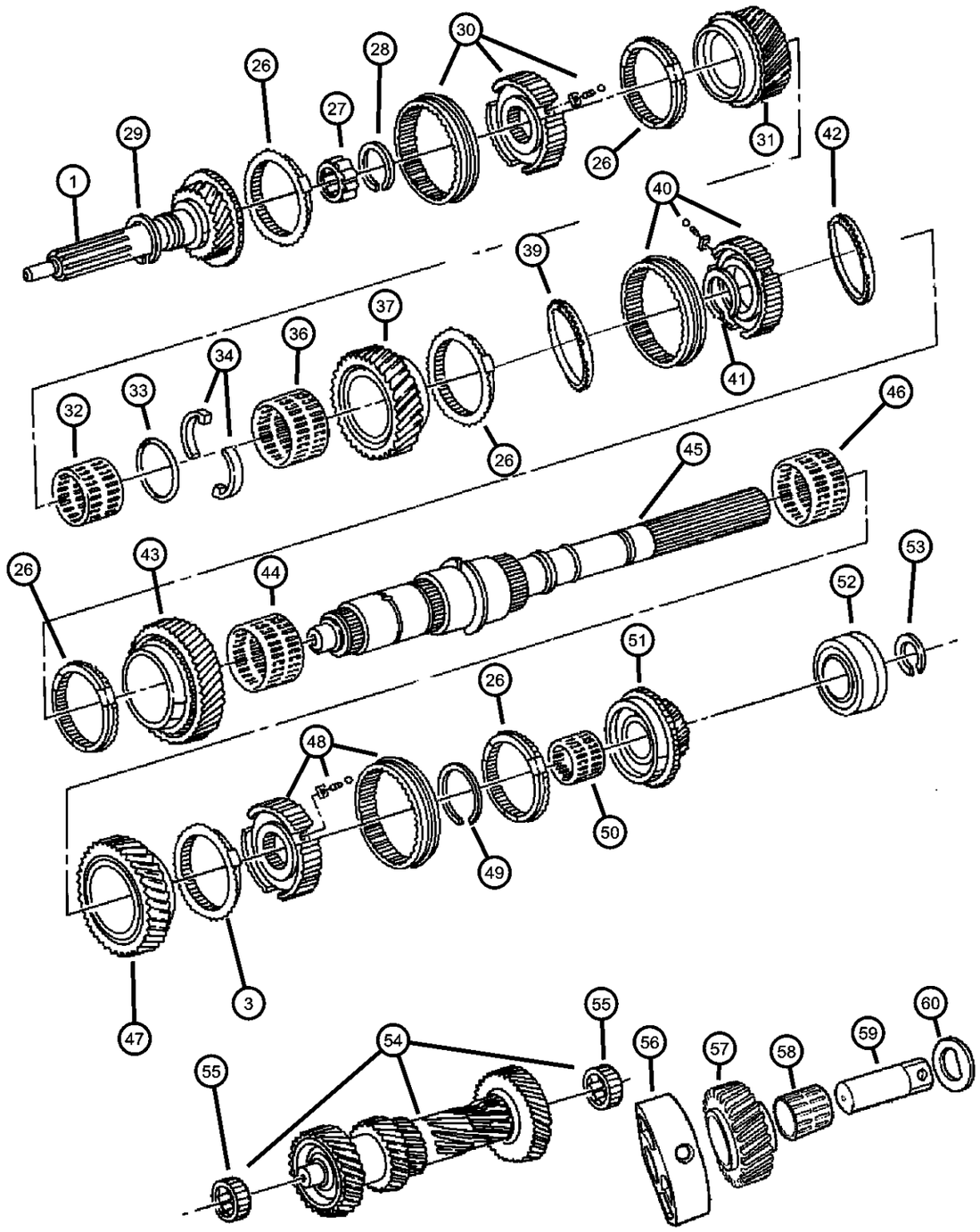

ITEM	PART NUMBER	QTY	LINE	SERIES	BODY	ENGINE	TRANS	TRIM	DESCRIPTION
-22	04202320	1	1			EP0	DDK		SPACER, Input Shaft, 1.42mm(,056")
-23	04202321	1	1			EP0	DDK		SPACER, Input Shaft, 1.46mm(.057")
-24	04202322	1	1			EP0	DDK		SPACER, Input Shaft, 1.50mm(.059")
-25	04202323	1	1			EP0	DDK		SPACER, Input Shaft, 1.54mm(.061")
26	05013368AA	4	1			EP0	DDK		RING, Synchronizer Blocker
27	05013410AA	1	1			EP0	DDK		NEEDLE BEARING, Input Shaft
28	05013318AA	1	1			EP0	DDK		SNAP RING PACKAGE, Fifth Gear
29	05013379AA	1	1			EP0	DDK		RING, Snap
30	05013367AA	2	1			EP0	DDK		SYNCHRONIZER, Fifth And Reverse
31	05013400AA	1	1			EP0	DDK		GEAR, Third
32	05013365AA	3	1			EP0	DDK		BEARING, Needle
33	05013397AA	1	1			EP0	DDK		SNAP RING
34	05013398AA	2	1			EP0	DDK		WASHER, Output Shaft
-35	05013378AA	1	1			EP0	DDK		PIN
36	05013365AA	3	1			EP0	DDK		BEARING, Needle
37	05013395AA	1	1			EP0	DDK		GEAR, Second
-38	05013390AA	1	1			EP0	DDK		SNAP RING PACKAGE, Transmission
39	05013385AA	2	1			EP0	DDK		RING, 1st and 2nd Speed Blocker
40	05013386AA	1	1			EP0	DDK		SYNCHRONIZER, First and Second
41	05013390AA	1	1			EP0	DDK		SNAP RING PACKAGE, Transmission
42	05013385AA	2	1			EP0	DDK		RING, 1st and 2nd Speed Blocker
43	05013380AA	1	1			EP0	DDK		GEAR, First
44	05013381AA	1	1			EP0	DDK		BEARING, First Gear
45	05013360AA	1	1			EP0	DDK		SHAFT, Output
46	05013365AA	3	1			EP0	DDK		BEARING, Needle
47	05013364AA	1	1			EP0	DDK		GEAR, Reverse
48	05013367AA	2	1			EP0	DDK		SYNCHRONIZER, Fifth And Reverse
49	05013318AA	1	1			EP0	DDK		SNAP RING PACKAGE, Fifth Gear

DAKOTA (AN)

SERIES	LINE	BODY	ENGINE	TRANSMISSION
L = Dakota (All)	1 = Dakota 2WD 5 = Dakota 4WD	61 = Regular Cab (112 WB) 31 = Club Cab (131 WB) 84 = Quad Cab (131 WB)	EPE = 2.5L 4 Cylinder EHC = 3.9L 6 Cylinder EML = 5.0L 8 Cylinder EVA = 4.7L Magnum V8 EP0 = All 2.5L EH0 = All 3.9L EM0 = All 5.9L EV0 = All 4.7L	DGK = 4 Speed Automatic 42RE DGT = 4 Speed Automatic 46RE DDC = 5 Speed HD Manual DDK = 5 Speed HD Manual DG4 = Multispeed Automatic 45RFE DG0 = All Automatic Transmissions DBB = All Manual Transmissions

AR = use ase required - = Non illustrrated part

Gear Train [DDK]
Figure NV1500-410

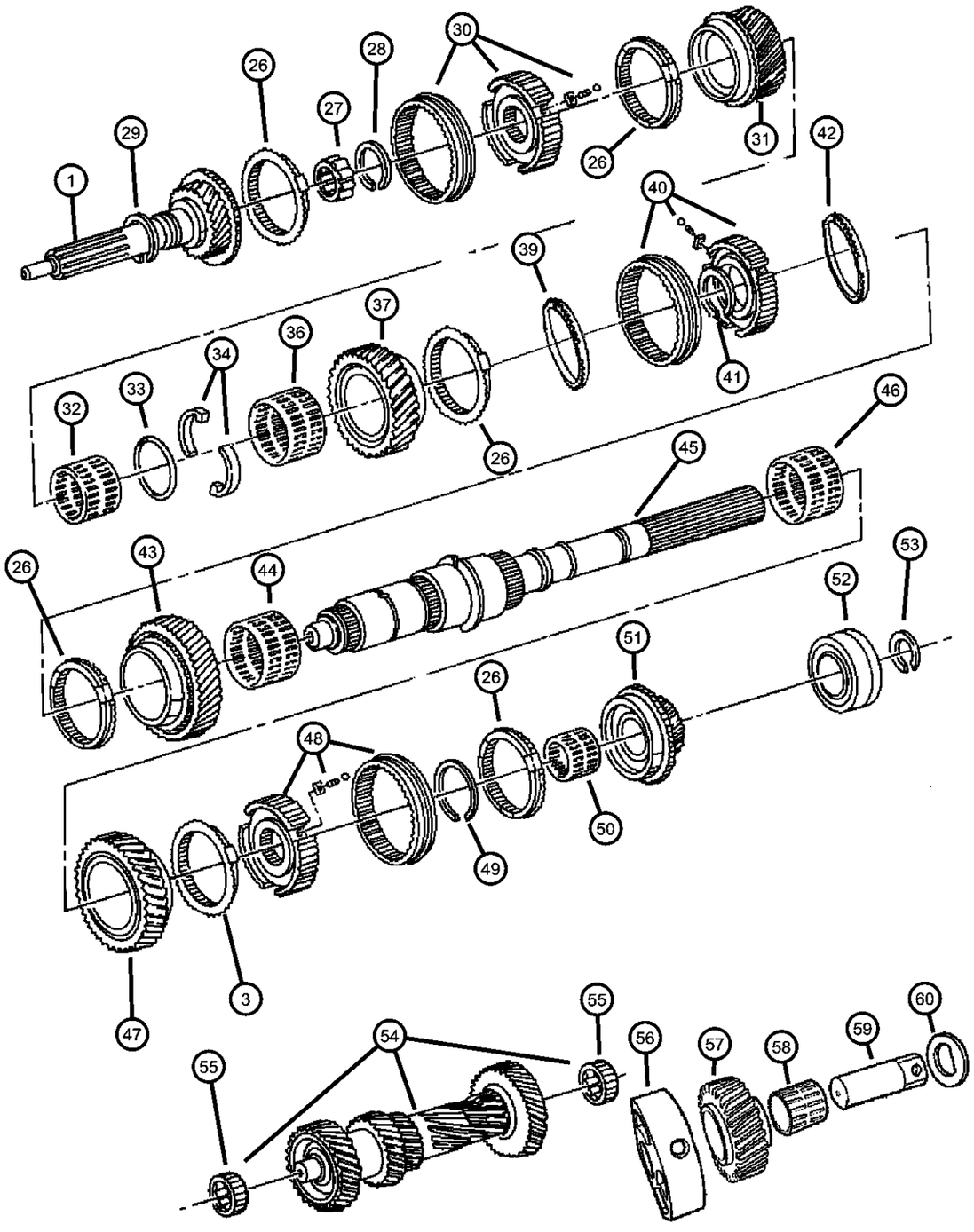

ITEM	PART NUMBER	QTY	LINE	SERIES	BODY	ENGINE	TRANS	TRIM	DESCRIPTION
50	05013375AA	1	1			EP0	DDK		BEARING, Needle
51	05013373AA	1	1			EP0	DDK		GEAR, Fifth
52	05013376AA	1	1			EP0	DDK		BEARING, Output Shaft
53	05013377AA	1	1			EP0	DDK		SNAP RING, Output Shaft Bearing
54	05013414AA	1	1			EP0	DDK		SHAFT, Counter
55	05013416AA	2	1			EP0	DDK		CONE ASSEMBLY, Countershaft
56	05127544AA	1	1			EP0	DDK		SUPPORT, Segment Idler Shaft
57	05127539AA	1	1			EP0	DDK		GEAR, Reverse Idler
58	05013417AA	1	1			EP0	DDK		BEARING, Idler
59	05127512AA	1	1			EP0	DDK		IDLER SHAFT, Transmission
60	05127545AA	1	1			EP0	DDK		WASHER, Reverse Idler

DAKOTA (AN)

SERIES	LINE	BODY	ENGINE	TRANSMISSION
L = Dakota (All)	1 = Dakota 2WD	61 = Regular Cab (112 WB)	EPE = 2.5L 4 Cylinder	DGK = 4 Speed Automatic 42RE
	5 = Dakota 4WD	31 = Club Cab (131 WB)	EHC = 3.9L 6 Cylinder	DGT = 4 Speed Automatic 46RE
		84 = Quad Cab (131 WB)	EML = 5.0L 8 Cylinder	DDC = 5 Speed HD Manual
			EVA = 4.7L Magnum V8	DDK = 5 Speed HD Manual
			EP0 = All 2.5L	DG4 = Multispeed Automatic 45RFE
			EH0 = All 3.9L	DG0 = All Automatic Transmissions
			EM0 = All 5.9L	DBB = All Manual Transmissions
			EV0 = All 4.7L	

AR = use ase required - = Non illustrrated part

Fork & Rails [DDK]
Figure NV1500-910

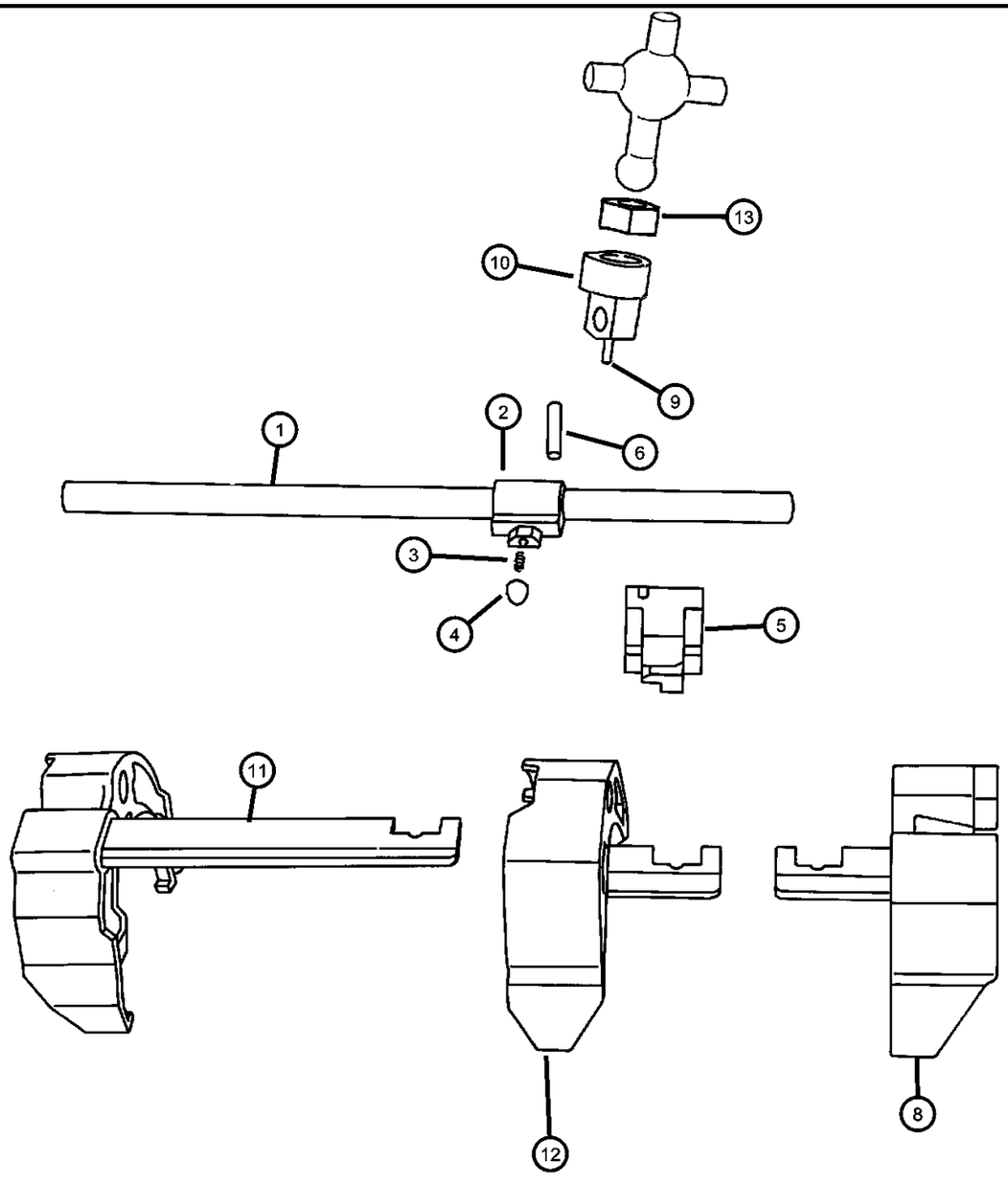

ITEM	PART NUMBER	QTY	LINE	SERIES	BODY	ENGINE	TRANS	TRIM	DESCRIPTION

NOTE:
Sales Codes:
[DDK]=NVG 1500 5 Speed Manual Transmission
[EP0]=All 2.5L 4 Cylinder Engines

1	05072116AA	1	1			EP0	DDK		SHAFT, Shift Lever
2	05016504AA	1	1			EP0	DDK		LEVER, Shift Shaft
3	05016504AA	1							SPRING, Lever, (NOT REQUIRED)
4	05015949AA	1	1			EP0	DDK		PLUNGER
5	05013350AA	1	1			EP0	DDK		BUSHING, Transmission
6	04741139	1	1			EP0	DDK		PIN, Shift Shaft
-7	04741139	1	1			EP0	DDK		PIN, Shift Shaft
8	05013344AA	1	1			EP0	DDK		FORK, Third and Fourth
9	04741139	1	1			EP0	DDK		PIN, Shift Shaft
10	04874352	1	1			EP0	DDK		SOCKET, Shift Shaft
11	05013345AA	1	1			EP0	DDK		FORK, Fifth Shift
12	05013343AA	1	1			EP0	DDK		FORK, First and Second
13	05012020AA	1	1			EP0	DDK		ISOLATOR, Shift Lever

DAKOTA (AN)

SERIES	LINE	BODY	ENGINE	TRANSMISSION
L = Dakota (All)	1 = Dakota 2WD	61 = Regular Cab (112 WB)	EPE = 2.5L 4 Cylinder	DGK = 4 Speed Automatic 42RE
	5 = Dakota 4WD	31 = Club Cab (131 WB)	EHC = 3.9L 6 Cylinder	DGT = 4 Speed Automatic 46RE
		84 = Quad Cab (131 WB)	EML = 5.0L 8 Cylinder	DDC = 5 Speed HD Manual
			EVA = 4.7L Magnum V8	DDK = 5 Speed HD Manual
			EP0 = All 2.5L	DG4 = Multispeed Automatic 45RFE
			EH0 = All 3.9L	DG0 = All Automatic Transmissions
			EM0 = All 5.9L	DBB = All Manual Transmissions
			EV0 = All 4.7L	

Controls, Gearshift [DDK]
Figure NV1500-1210

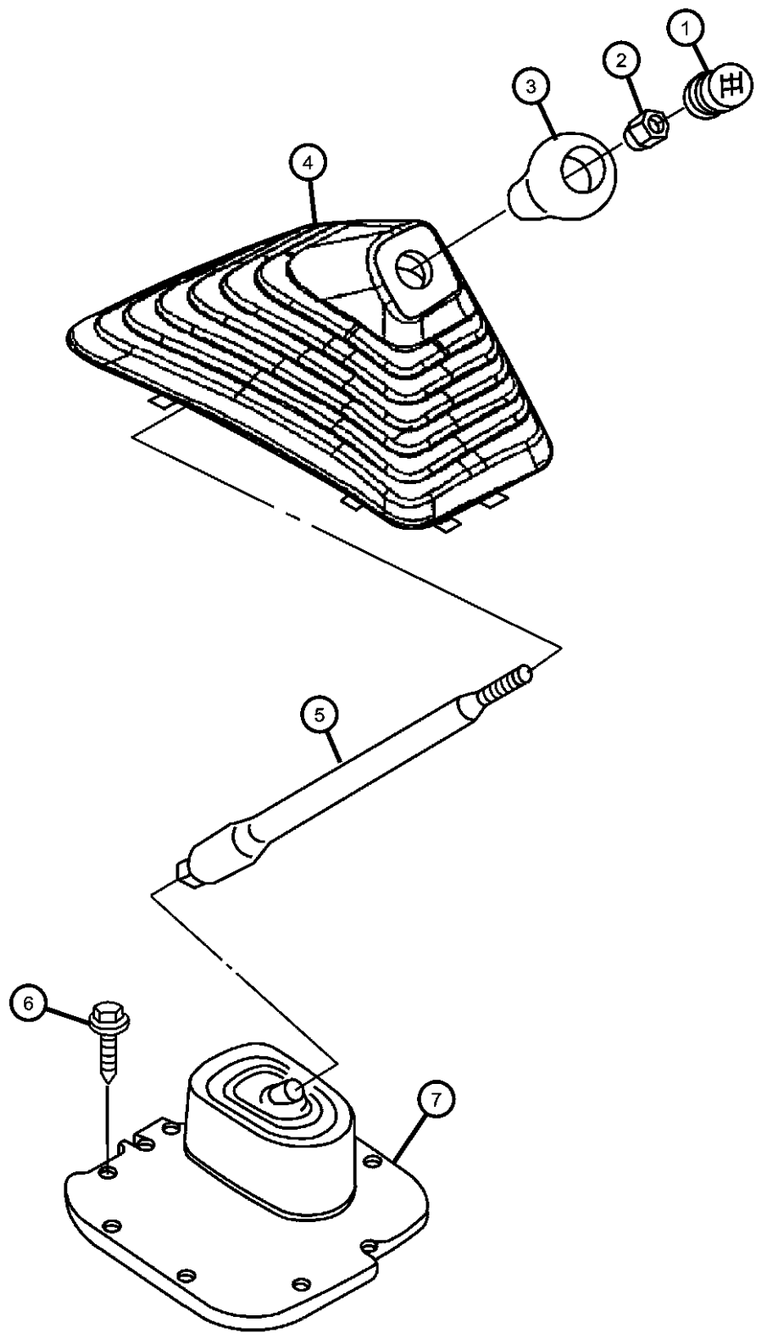

ITEM	PART NUMBER	QTY	LINE	SERIES	BODY	ENGINE	TRANS	TRIM	DESCRIPTION
NOTE:									
Sales Codes:									
[DBB]=All Manual Transmissions									
1	04446921	1					DBB		INSERT, Transmission Shift Knob
2	06502556	1					DBB		NUT, Hex, M10-1.5
3	52104174	1					DBB		KNOB, Gearshift
4	52107785AB	1					DBB		BOOT, Gearshift
5	52107843AA	1					DBB		LEVER, Gearshift
6	52107843AA	1							SCREW, (NOT SERVICED)
7	52110006AA	1					DBB		BOOT, Gear Shift Lever

DAKOTA (AN)

SERIES	LINE	BODY	ENGINE	TRANSMISSION
L = Dakota (All)	1 = Dakota 2WD	61 = Regular Cab (112 WB)	EPE = 2.5L 4 Cylinder	DGK = 4 Speed Automatic 42RE
	5 = Dakota 4WD	31 = Club Cab (131 WB)	EHC = 3.9L 6 Cylinder	DGT = 4 Speed Automatic 46RE
		84 = Quad Cab (131 WB)	EML = 5.0L 8 Cylinder	DDC = 5 Speed HD Manual
			EVA = 4.7L Magnum V8	DDK = 5 Speed HD Manual
			EP0 = All 2.5L	DG4 = Multispeed Automatic 45RFE
			EH0 = All 3.9L	DG0 = All Automatic Transmissions
			EM0 = All 5.9L	DBB = All Manual Transmissions
			EV0 = All 4.7L	

Group - 233

Transfer Case Model 233 [DHT]

233-100 Transfer Case Assembly 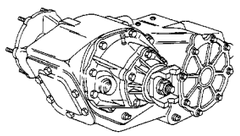	**233-1200** Gearshift Controls and Skid Plates 	**233-200** Case and Extension 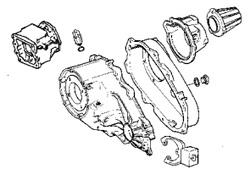	**233-400** Gear Train 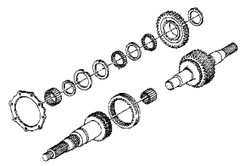
233-900 Fork and Rails 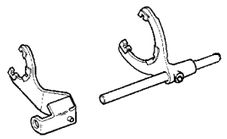			

Group - 233 Transfer Case Model 233 [DHT]

Illustration Title — Group-Fig. No.

Transfer Case Assembly
Transfer Case, NV233 [DHT] ..... Fig. 233 - 110

Case and Extension
Case & Related Parts [DHT] ..... Fig. 233 - 210

Gear Train
Gear Train [DHT] ..... Fig. 233 - 410

Fork and Rails
Fork & Rail Shift [DHT] ..... Fig. 233 - 910

Gearshift Controls and Skid Plates
Skid Plate ..... Fig. 233 - 1210
Gearshift Control ..... Fig. 233 - 1220

Transfer Case, NV233 [DHT]
Figure 233-110

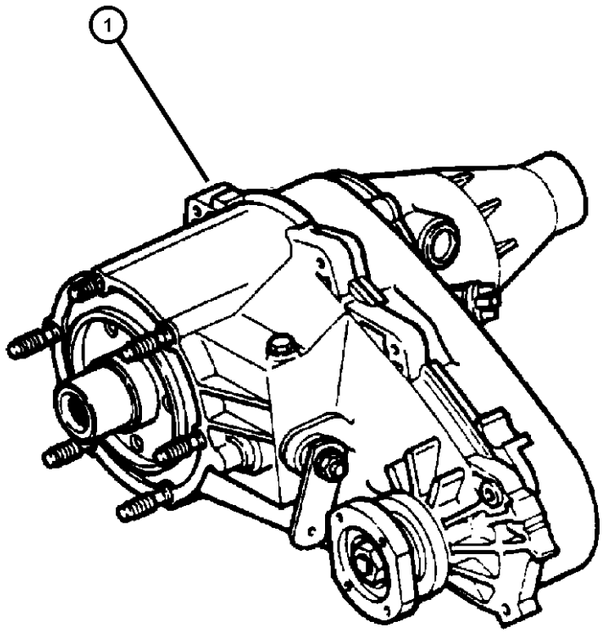

ITEM	PART NUMBER	QTY	LINE	SERIES	BODY	ENGINE	TRANS	TRIM	DESCRIPTION
1	52105472AB	1	5						TRANSFER CASE, NV233

DAKOTA (AN)

SERIES	LINE	BODY	ENGINE	TRANSMISSION
L = Dakota (All)	1 = Dakota 2WD	61 = Regular Cab (112 WB)	EPE = 2.5L 4 Cylinder	DGK = 4 Speed Automatic 42RE
	5 = Dakota 4WD	31 = Club Cab (131 WB)	EHC = 3.9L 6 Cylinder	DGT = 4 Speed Automatic 46RE
		84 = Quad Cab (131 WB)	EML = 5.0L 8 Cylinder	DDC = 5 Speed HD Manual
			EVA = 4.7L Magnum V8	DDK = 5 Speed HD Manual
			EP0 = All 2.5L	DG4 = Multispeed Automatic 45RFE
			EH0 = All 3.9L	DG0 = All Automatic Transmissions
			EM0 = All 5.9L	DBB = All Manual Transmissions
			EV0 = All 4.7L	

Case & Related Parts [DHT]
Figure 233-210

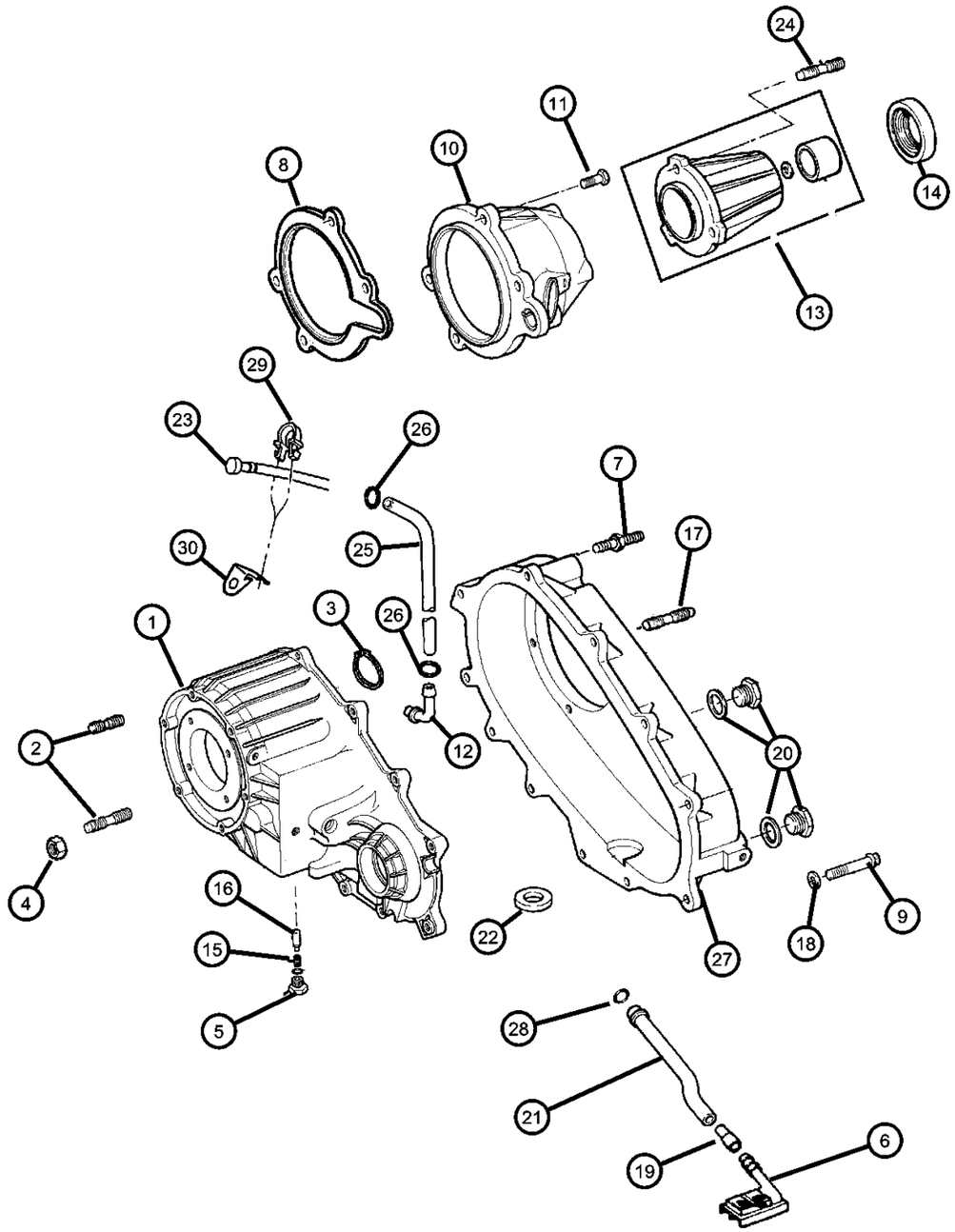

ITEM	PART NUMBER	QTY	LINE	SERIES	BODY	ENGINE	TRANS	TRIM	DESCRIPTION
1	05019028AA	1	5						CASE, Transfer Front
2	04505365	6	5						STUD
3	04219065	1	5						SNAP RING, Annulus Gear
4	06033172	6	5						NUT AND WASHER, Hex, .375-24
5	04886473AA	1	5						SCREW
6	04338943	1	5						FILTER, Transfer Case Oil
7	04210617	4	5						BOLT, Transfer Case
8	04897958AA	1	5						GASKET, Transfer Case
9	04210614	1	5						BOLT, Hex Flange Head
10	04897956AA	1	5						RETAINER, Transfer Case Rear
11	06500318	5	5						BOLT
12	04796910	1	5						VENT, Transfer Case
13	05019025AA	1	5						EXTENSION, Transfer Case
14	05019026AA	1	5						SEAL, Output Shaft
15	05019538AA	1	5						SPRING, Poppet Plunger
16	53008217	1	5						PLUNGER
17	06501289	2	5						STUD
18	04210983	2	5						WASHER, Flat
19	04338944	1	5						CONNECTOR, Oil Tube Pickup
20	04856641	2	5						PLUG, Oil Fill
21	04338941	1	5						TUBE, Oil Pickup
22	03681601	1	5						MAGNET, Transmission
23	53007494	1	5						VENT, Transfer Case
24	04210617	4	5						BOLT, Transfer Case
25	HFV00516	1	5						HOSE, Fuel And Vapor, 25 Foot Roll 5/16"
26	06502081	1	5						CLAMP, Oil Cooler Line
27	04886222AA	1	5						CASE, Transfer Rear
28	04338942	1	5						SEAL, Oil
29	53008550	1	5						CLIP
30	52118181	1	5			EM0			CLIP

DAKOTA (AN)

SERIES	LINE	BODY	ENGINE	TRANSMISSION
L = Dakota (All)	1 = Dakota 2WD	61 = Regular Cab (112 WB)	EPE = 2.5L 4 Cylinder	DGK = 4 Speed Automatic 42RE
	5 = Dakota 4WD	31 = Club Cab (131 WB)	EHC = 3.9L 6 Cylinder	DGT = 4 Speed Automatic 46RE
		84 = Quad Cab (131 WB)	EML = 5.0L 8 Cylinder	DDC = 5 Speed HD Manual
			EVA = 4.7L Magnum V8	DDK = 5 Speed HD Manual
			EP0 = All 2.5L	DG4 = Multispeed Automatic 45RFE
			EH0 = All 3.9L	DG0 = All Automatic Transmissions
			EM0 = All 5.9L	DBB = All Manual Transmissions
			EV0 = All 4.7L	

AR = use ase required - = Non illustrrated part

Gear Train [DHT]
Figure 233-410

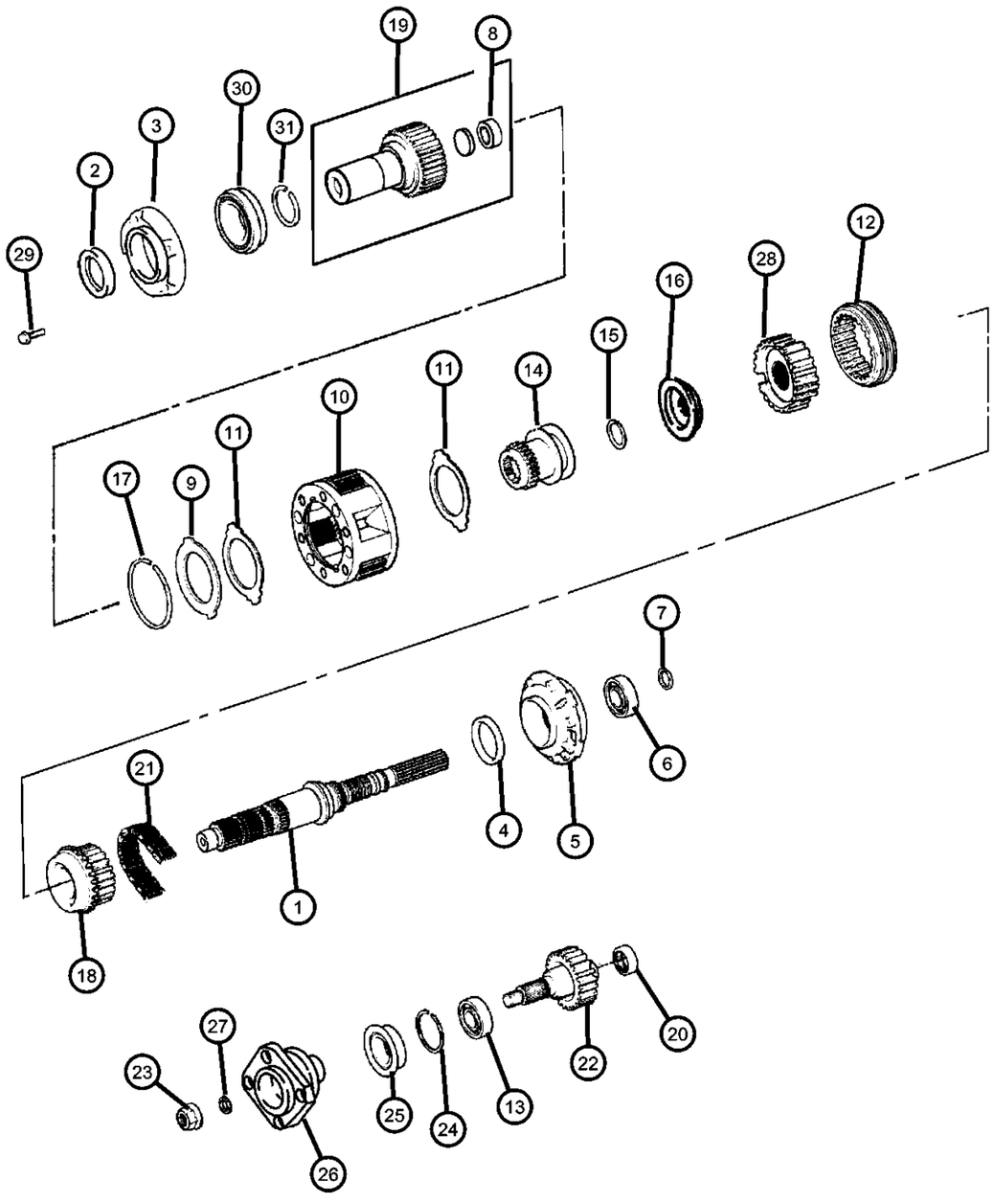

ITEM	PART NUMBER	QTY	LINE	SERIES	BODY	ENGINE	TRANS	TRIM	DESCRIPTION
NOTE:									
Sales Codes:									
[DBB]=All Manual Transmissions									
[DGT]=42 RE 4 Speed Automatic Transmission									
[DG0]=All Automatic Transmissions									
[EV0]=All 4.7L V-8 Engines									
1	05015849AA	1	5						MAINSHAFT, Transfer Case
2	05019020AA	1	5						SEAL, Input Gear
3	04338973	1	5						EXTENSION, Transfer Case
4	04210603	1	5						SEAL, Main Shaft
5	04338936	1	5						PUMP, Transfer Case Oil
6	02466224	1	5						BEARING, Output Shaft
7	06025755	1	5						SNAP RING, 1.28 ID
8	83503507	1	5						BEARING, Input Shaft
9	04874403	1	5			EH0, EV0	DBB		RING
10	04796903AB	1	5						PLANETARY, Transfer Case
11	04338908	1	5						THRUST WASHER, Planetary Carrier
12	04796909	1	5						SLEEVE, Mode Synchronizer
13	04338892	1	5						BEARING
14	04897955AA	1	5						SLEEVE, Range Fork
15	01942063	1	5				DGT		SNAP RING
16	05019579AA	1	5						PLATE
17	04338910	1	5						SNAP RING
18	04797017	1	5						SPROCKET, Transfer Case
19	05015432AA	1	5						GEAR, Input
20	04269189	1	5						BEARING, Output Shaft
21	04636961	1	5						CHAIN, Transfer Case
22	05015850AA	1	5						OUTPUT SHAFT, Transfer Case
23	04446488	1	5						NUT, Hex Flange
24	04338894	1	5						SNAP RING, Bearing
25	05015847AA	1	5						SEAL, Output Shaft
26	05019583AA	1	5						FLANGE, Driveshaft Yoke
27	04210983	2	5						WASHER, Flat
28	04741240	1	5						HUB, Sychronizer Mode

DAKOTA (AN)

SERIES	LINE	BODY	ENGINE	TRANSMISSION
L = Dakota (All)	1 = Dakota 2WD	61 = Regular Cab (112 WB)	EPE = 2.5L 4 Cylinder	DGK = 4 Speed Automatic 42RE
	5 = Dakota 4WD	31 = Club Cab (131 WB)	EHC = 3.9L 6 Cylinder	DGT = 4 Speed Automatic 46RE
		84 = Quad Cab (131 WB)	EML = 5.0L 8 Cylinder	DDC = 5 Speed HD Manual
			EVA = 4.7L Magnum V8	DDK = 5 Speed HD Manual
			EP0 = All 2.5L	DG4 = Multispeed Automatic 45RFE
			EH0 = All 3.9L	DG0 = All Automatic Transmissions
			EM0 = All 5.9L	DBB = All Manual Transmissions
			EV0 = All 4.7L	

Gear Train [DHT]
Figure 233-410

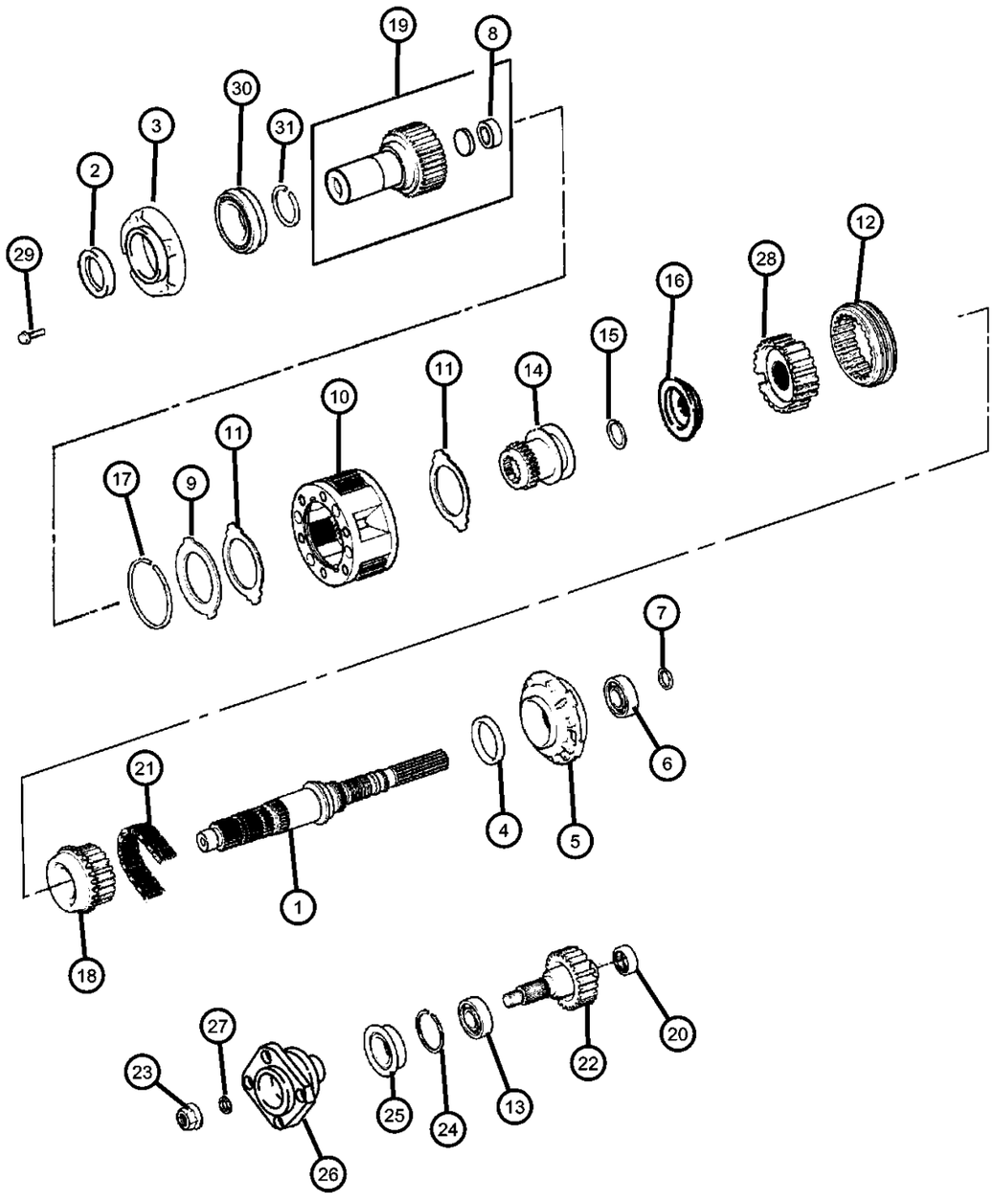

ITEM	PART NUMBER	QTY	LINE	SERIES	BODY	ENGINE	TRANS	TRIM	DESCRIPTION
29	06500318	4	5						BOLT
30	04338891	1	5						BEARING, Input Gear
31	01942063	1	5				DGT		SNAP RING

DAKOTA (AN)

SERIES	LINE	BODY	ENGINE	TRANSMISSION
L = Dakota (All)	1 = Dakota 2WD	61 = Regular Cab (112 WB)	EPE = 2.5L 4 Cylinder	DGK = 4 Speed Automatic 42RE
	5 = Dakota 4WD	31 = Club Cab (131 WB)	EHC = 3.9L 6 Cylinder	DGT = 4 Speed Automatic 46RE
		84 = Quad Cab (131 WB)	EML = 5.0L 8 Cylinder	DDC = 5 Speed HD Manual
			EVA = 4.7L Magnum V8	DDK = 5 Speed HD Manual
			EP0 = All 2.5L	DG4 = Multispeed Automatic 45RFE
			EH0 = All 3.9L	DG0 = All Automatic Transmissions
			EM0 = All 5.9L	DBB = All Manual Transmissions
			EV0 = All 4.7L	

Fork & Rail Shift [DHT]
Figure 233-910

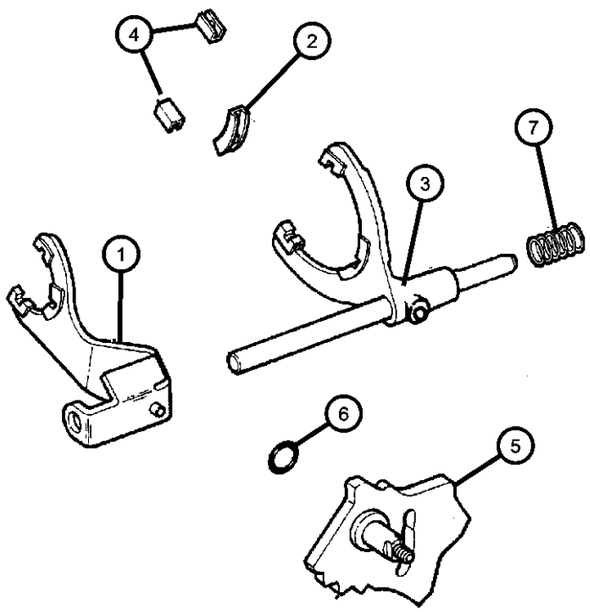

ITEM	PART NUMBER	QTY	LINE	SERIES	BODY	ENGINE	TRANS	TRIM	DESCRIPTION
1	05019577AB	1	5						FORK, Range
2	04167969	2	5						PAD, Shift Fork
3	05080533AA	1	5						FORK, Transfer Case Mode Shift
4	04219073	1	5						PAD, Shift Fork
5	05019031AB	1	5						SECTOR, Transfer Case
6	04167963	1	5						SEAL, O-Ring
7	04338925	1	5						SPRING, Mode Shift Rail

DAKOTA (AN)

SERIES	LINE	BODY	ENGINE	TRANSMISSION
L = Dakota (All)	1 = Dakota 2WD	61 = Regular Cab (112 WB)	EPE = 2.5L 4 Cylinder	DGK = 4 Speed Automatic 42RE
	5 = Dakota 4WD	31 = Club Cab (131 WB)	EHC = 3.9L 6 Cylinder	DGT = 4 Speed Automatic 46RE
		84 = Quad Cab (131 WB)	EML = 5.0L 8 Cylinder	DDC = 5 Speed HD Manual
			EVA = 4.7L Magnum V8	DDK = 5 Speed HD Manual
			EP0 = All 2.5L	DG4 = Multispeed Automatic 45RFE
			EH0 = All 3.9L	DG0 = All Automatic Transmissions
			EM0 = All 5.9L	DBB = All Manual Transmissions
			EV0 = All 4.7L	

Skid Plate
Figure 233-1210

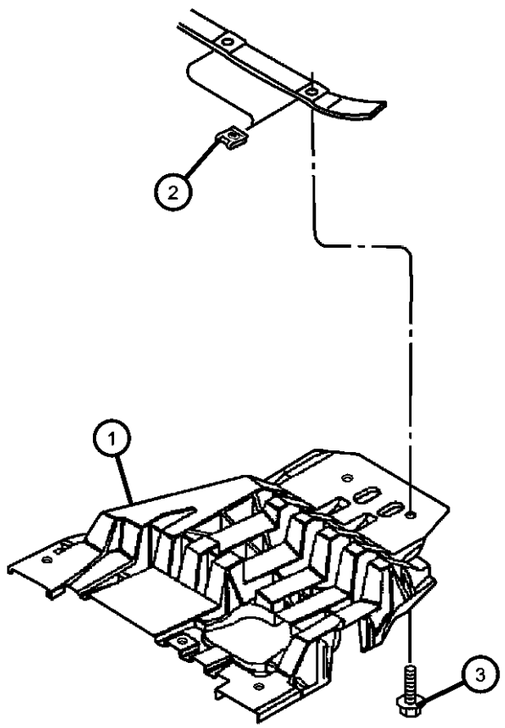

ITEM	PART NUMBER	QTY	LINE	SERIES	BODY	ENGINE	TRANS	TRIM	DESCRIPTION
1	52020479AB	1	5						SKID PLATE, Front
2	06101340	2	5						U-NUT, M10-1.50
3	06506164AA	2	5						SCREW AND WASHER, Hex Head

DAKOTA (AN)

SERIES	LINE	BODY	ENGINE	TRANSMISSION
L = Dakota (All)	1 = Dakota 2WD	61 = Regular Cab (112 WB)	EPE = 2.5L 4 Cylinder	DGK = 4 Speed Automatic 42RE
	5 = Dakota 4WD	31 = Club Cab (131 WB)	EHC = 3.9L 6 Cylinder	DGT = 4 Speed Automatic 46RE
		84 = Quad Cab (131 WB)	EML = 5.0L 8 Cylinder	DDC = 5 Speed HD Manual
			EVA = 4.7L Magnum V8	DDK = 5 Speed HD Manual
			EP0 = All 2.5L	DG4 = Multispeed Automatic 45RFE
			EH0 = All 3.9L	DG0 = All Automatic Transmissions
			EM0 = All 5.9L	DBB = All Manual Transmissions
			EV0 = All 4.7L	

AR = use ase required - = Non illustrrated part

Gearshift Control
Figure 233-1220

ITEM	PART NUMBER	QTY	LINE	SERIES	BODY	ENGINE	TRANS	TRIM	DESCRIPTION
1	05019471AA	1	5						GEAR MOTOR, Transfer Case
2	05066925AA	3	5						BOLT

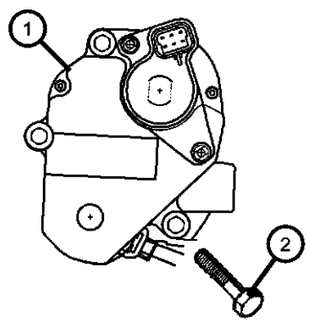

DAKOTA (AN)

SERIES	LINE	BODY	ENGINE	TRANSMISSION
L = Dakota (All)	1 = Dakota 2WD	61 = Regular Cab (112 WB)	EPE = 2.5L 4 Cylinder	DGK = 4 Speed Automatic 42RE
	5 = Dakota 4WD	31 = Club Cab (131 WB)	EHC = 3.9L 6 Cylinder	DGT = 4 Speed Automatic 46RE
		84 = Quad Cab (131 WB)	EML = 5.0L 8 Cylinder	DDC = 5 Speed HD Manual
			EVA = 4.7L Magnum V8	DDK = 5 Speed HD Manual
			EP0 = All 2.5L	DG4 = Multispeed Automatic 45RFE
			EH0 = All 3.9L	DG0 = All Automatic Transmissions
			EM0 = All 5.9L	DBB = All Manual Transmissions
			EV0 = All 4.7L	

Group - 244

Transfer Case Model 244 [DHV]

244-100 Transfer Case Assembly 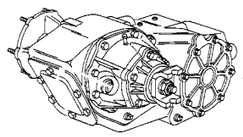	**244-1200** Gearshift Controls and Skid Plates 	**244-200** Case and Extension 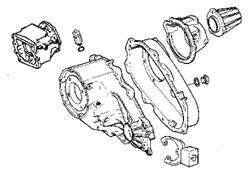	**244-400** Gear Train 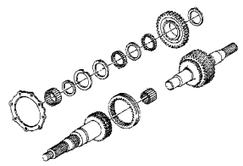
244-900 Fork and Rails 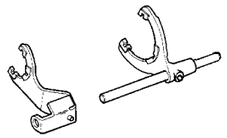			

Group - 244 Transfer Case Model 244 [DHV]

Illustration Title — Group-Fig. No.

Transfer Case Assembly
Transfer Case [DHV] ..... Fig. 244 - 110

Case and Extension
Case & Related Parts [DHV] ..... Fig. 244 - 210

Gear Train
Gear Train Shift on the Fly (DHV) ..... Fig. 244 - 410

Fork and Rails
Fork and Rail Shift on the Fly (DHV) ..... Fig. 244 - 910

Gearshift Controls and Skid Plates
Skid Plate ..... Fig. 244 - 1210
Gearshift Control ..... Fig. 244 - 1220

Transfer Case [DHV]
Figure 244-110

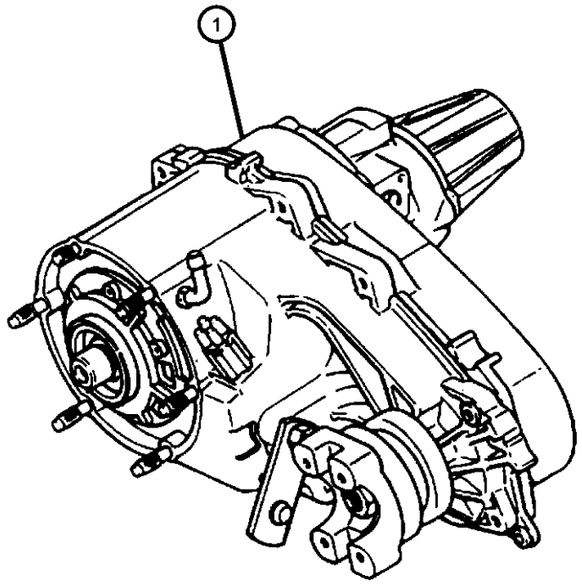

ITEM	PART NUMBER	QTY	LINE	SERIES	BODY	ENGINE	TRANS	TRIM	DESCRIPTION
1	52105473AD	1	5						TRANSFER CASE, NV244

DAKOTA (AN)

SERIES	LINE	BODY	ENGINE	TRANSMISSION
L = Dakota (All)	1 = Dakota 2WD	61 = Regular Cab (112 WB)	EPE = 2.5L 4 Cylinder	DGK = 4 Speed Automatic 42RE
	5 = Dakota 4WD	31 = Club Cab (131 WB)	EHC = 3.9L 6 Cylinder	DGT = 4 Speed Automatic 46RE
		84 = Quad Cab (131 WB)	EML = 5.0L 8 Cylinder	DDC = 5 Speed HD Manual
			EVA = 4.7L Magnum V8	DDK = 5 Speed HD Manual
			EP0 = All 2.5L	DG4 = Multispeed Automatic 45RFE
			EH0 = All 3.9L	DG0 = All Automatic Transmissions
			EM0 = All 5.9L	DBB = All Manual Transmissions
			EV0 = All 4.7L	

Case & Related Parts [DHV]
Figure 244-210

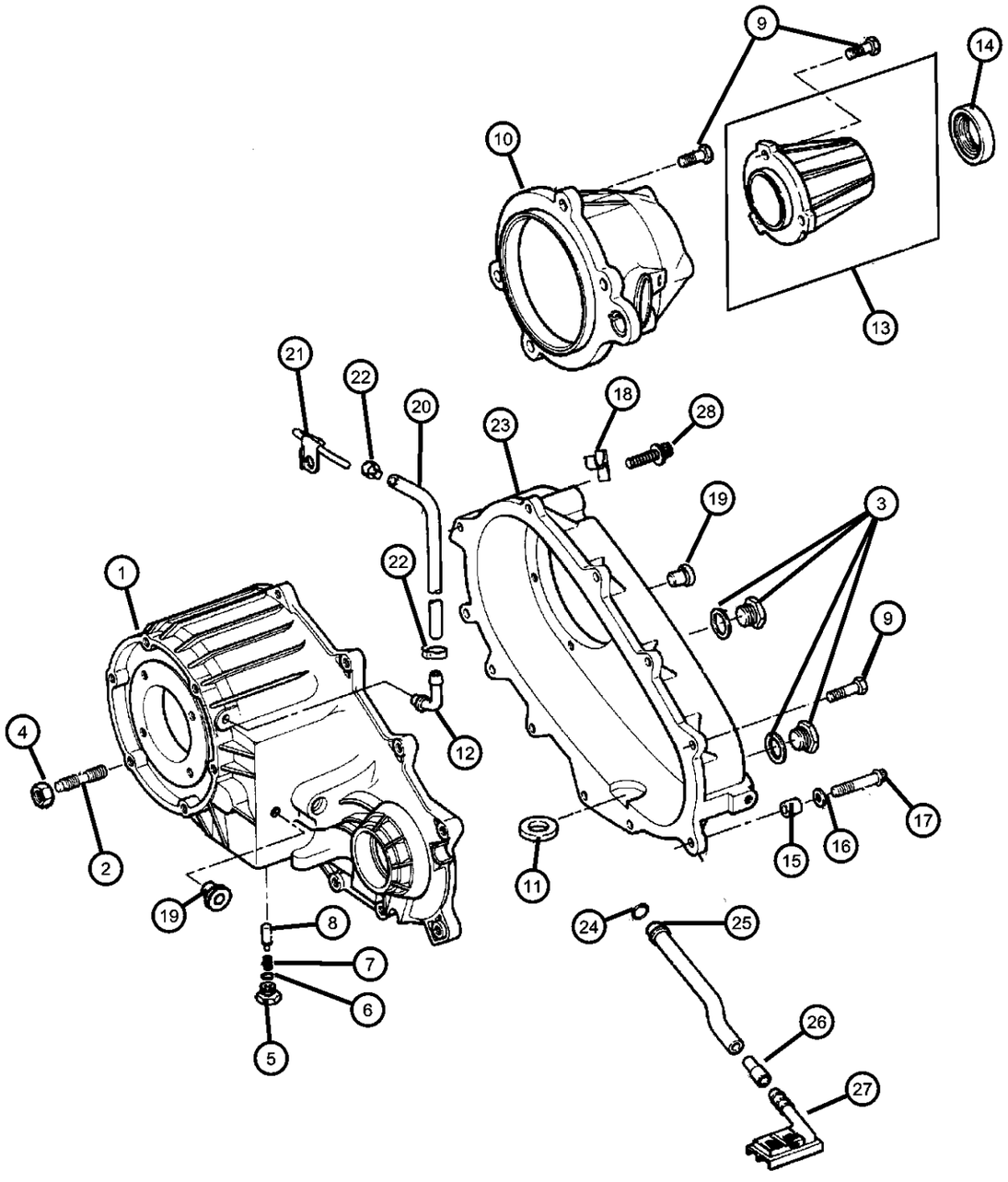

ITEM	PART NUMBER	QTY	LINE	SERIES	BODY	ENGINE	TRANS	TRIM	DESCRIPTION
1	05019030AA	1	5						CASE, Transfer Front
2	04505365	6	5						STUD
3	04856641	2	5						PLUG, Oil Fill
4	06033172	6	5						NUT AND WASHER, Hex, .375-24
5	04886473AA	1	5						SCREW
6	04338956	1	5						SEAL, Vacuum Switch
7	05019538AA	1	5						SPRING, Poppet Plunger
8	53008217	1	5						PLUNGER
9	04210617	11	5						BOLT, Transfer Case
10	05003456AA	1	5						RETAINER, Transfer Case Rear
11	03681601	1	5						MAGNET, Transmission
12	04796910	1	5						VENT, Transfer Case
13	05019025AA	1	5						EXTENSION, Transfer Case
14	05019026AA	1	5						SEAL, Output Shaft
15	04116310	2	5						DOWEL, Transfer Case
16	04210983	2	5						WASHER, Flat
17	04210614	4	5						BOLT, Hex Flange Head
18	53008550	1	5						CLIP
19	53008550	1							PLUG, (NOT REQUIRED)
20	HFV00516	1	5						HOSE, Fuel And Vapor, 25 Foot Roll 5/16"
21	53007494	1	5						VENT, Transfer Case
22	06502081	1	5						CLAMP, Oil Cooler Line
23	05013858AA	1	5						CASE, Transfer Case Rear
24	04338942	1	5						SEAL, Oil
25	05003455AA	1	5						TUBE, Oil Pickup
26	04338944	1	5						CONNECTOR, Oil Tube Pickup
27	04338943	1	5						FILTER, Transfer Case Oil
28	04338943	1							BOLT, Twelve Point Head, M10x1.5x48, (NOT SERVICED)
-29	04638953	1	5						DOWEL
-30	04210614	4	5						BOLT, Hex Flange Head
-31	06025755	1	5						SNAP RING, 1.28 ID

DAKOTA (AN)

SERIES	LINE	BODY	ENGINE	TRANSMISSION
L = Dakota (All)	1 = Dakota 2WD 5 = Dakota 4WD	61 = Regular Cab (112 WB) 31 = Club Cab (131 WB) 84 = Quad Cab (131 WB)	EPE = 2.5L 4 Cylinder EHC = 3.9L 6 Cylinder EML = 5.0L 8 Cylinder EVA = 4.7L Magnum V8 EP0 = All 2.5L EH0 = All 3.9L EM0 = All 5.9L EV0 = All 4.7L	DGK = 4 Speed Automatic 42RE DGT = 4 Speed Automatic 46RE DDC = 5 Speed HD Manual DDK = 5 Speed HD Manual DG4 = Multispeed Automatic 45RFE DG0 = All Automatic Transmissions DBB = All Manual Transmissions

Gear Train Shift on the Fly (DHV)
Figure 244-410

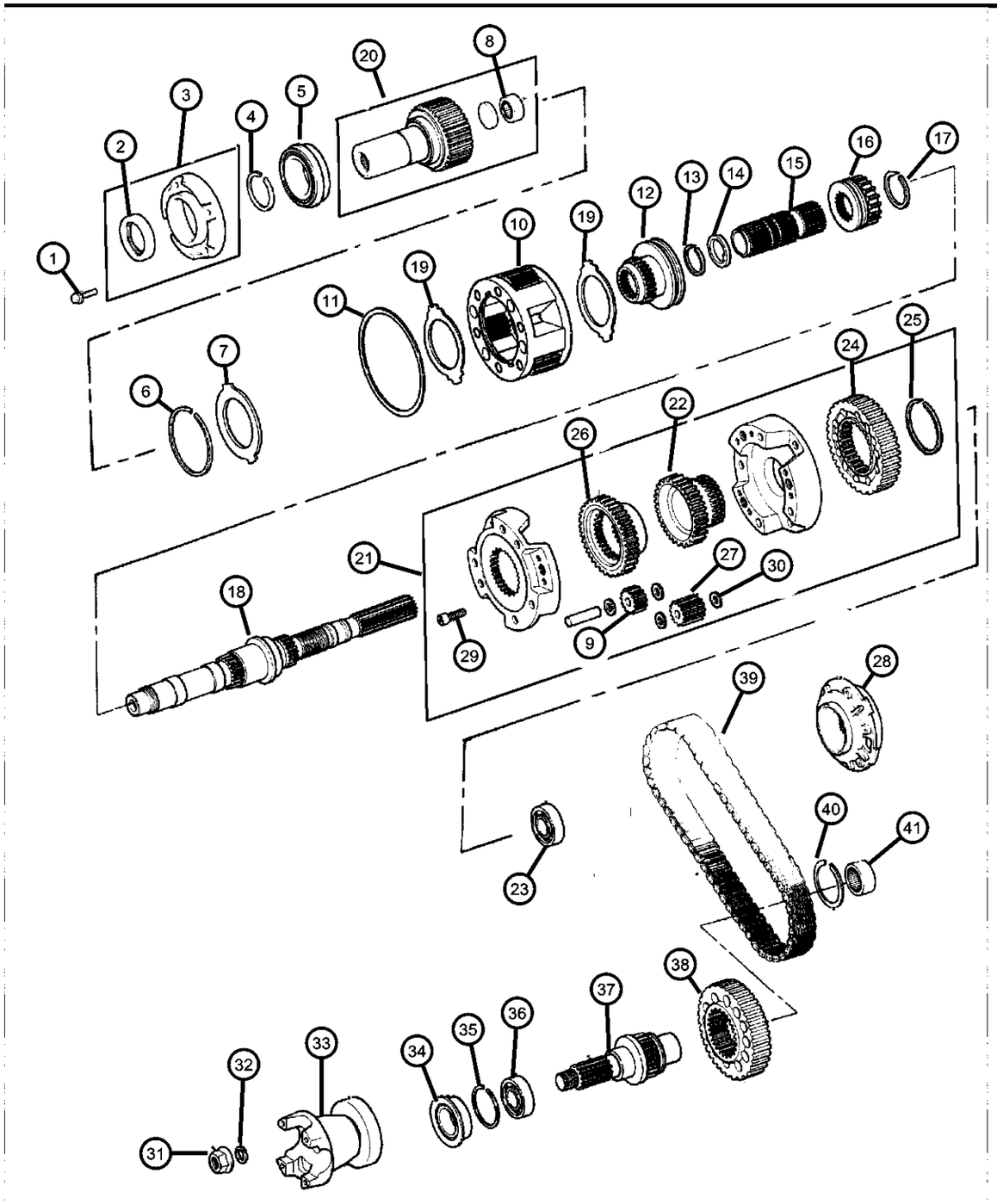

ITEM	PART NUMBER	QTY	LINE	SERIES	BODY	ENGINE	TRANS	TRIM	DESCRIPTION
1	06500318	4	5						BOLT
2	05019020AA	1	5						SEAL, Input Gear
3	05019025AA	1	5						EXTENSION, Transfer Case
4	03821558	1	5						SNAP RING
5	83503507	1	5						BEARING, Input Shaft
6	04338910	1	5						SNAP RING
7	04338910	1							RING, (NOT REQUIRED)
8	83503507	1	5						BEARING, Input Shaft
9	83504170	3	5						GEAR, Planetary
10	04796903AB	1	5						PLANETARY, Transfer Case
11	04219065	1	5						SNAP RING, Annulus Gear
12	05003746AA	1	5						SLEEVE, Shift Range
13	83503540	1	5						SNAP RING
14	83503539	1	5						WASHER, Intermediate Sleeve
15	04798277	1	5						SHAFT, Intermediate
16	05066924AA	1	5						SLEEVE, Mode Synchronizer
17	83503532	1	5						SNAP RING
18	05003448AA	1	5						MAINSHAFT, Transfer Case
19	04338908	2	5						THRUST WASHER, Planetary Carrier
20	05015491AA	1	5						GEAR, Input
21	05066922AA	1	5						DIFFERENTIAL, Transfer Case
22	05003451AA	1	5						SPROCKET, Transfer Case
23	05066996AA	1	5						NEEDLE BEARING, Roller Cage, None
24	05003452AA	1	5						SPROCKET, Transfer Case
25	83503532	1	5						SNAP RING
26	05066923AA	1	5						SPROCKET, Differential
27	83504170	3	5						GEAR, Planetary
28	04638896	1	5						PUMP, Transfer Case Gear Rotor
29	04886473AA	1	5						SCREW
30	83504168	12	5						WASHER, Differential Gear
31	04167924	1	5						NUT, Transfer Case Yoke
32	04210973	1	5						WASHER, Transfer Case Yoke

DAKOTA (AN)

SERIES	LINE	BODY	ENGINE	TRANSMISSION
L = Dakota (All)	1 = Dakota 2WD	61 = Regular Cab (112 WB)	EPE = 2.5L 4 Cylinder	DGK = 4 Speed Automatic 42RE
	5 = Dakota 4WD	31 = Club Cab (131 WB)	EHC = 3.9L 6 Cylinder	DGT = 4 Speed Automatic 46RE
		84 = Quad Cab (131 WB)	EML = 5.0L 8 Cylinder	DDC = 5 Speed HD Manual
			EVA = 4.7L Magnum V8	DDK = 5 Speed HD Manual
			EP0 = All 2.5L	DG4 = Multispeed Automatic 45RFE
			EH0 = All 3.9L	DG0 = All Automatic Transmissions
			EM0 = All 5.9L	DBB = All Manual Transmissions
			EV0 = All 4.7L	

Gear Train Shift on the Fly (DHV)
Figure 244-410

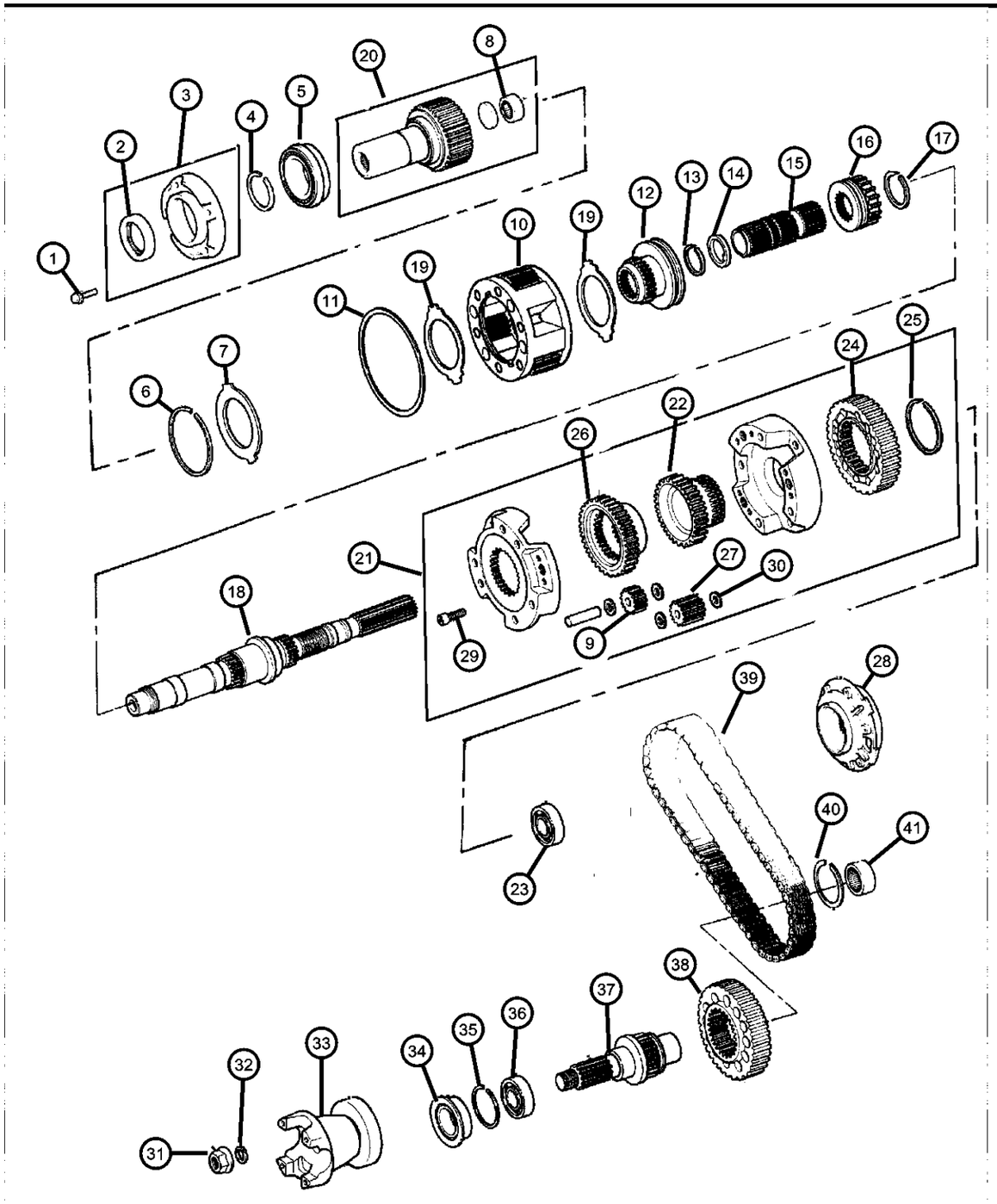

ITEM	PART NUMBER	QTY	LINE	SERIES	BODY	ENGINE	TRANS	TRIM	DESCRIPTION
33	05066927AA	1	5						FLANGE, Driveshaft Yoke
34	04798125	1	5						SEAL, Output Shaft
35	83503537	1	5						SNAP RING
36	02466224	1	5						BEARING, Output Shaft
37	05012336AA	1	5						OUTPUT SHAFT, Transfer Case
38	05003452AA	1	5						SPROCKET, Transfer Case
39	05003453AA	1	5						CHAIN, Transfer Case
40	04167991	1	5						SNAP RING, Bearing
41	04269189	1	5						BEARING, Output Shaft

DAKOTA (AN)

SERIES	LINE	BODY	ENGINE	TRANSMISSION
L = Dakota (All)	1 = Dakota 2WD	61 = Regular Cab (112 WB)	EPE = 2.5L 4 Cylinder	DGK = 4 Speed Automatic 42RE
	5 = Dakota 4WD	31 = Club Cab (131 WB)	EHC = 3.9L 6 Cylinder	DGT = 4 Speed Automatic 46RE
		84 = Quad Cab (131 WB)	EML = 5.0L 8 Cylinder	DDC = 5 Speed HD Manual
			EVA = 4.7L Magnum V8	DDK = 5 Speed HD Manual
			EP0 = All 2.5L	DG4 = Multispeed Automatic 45RFE
			EH0 = All 3.9L	DG0 = All Automatic Transmissions
			EM0 = All 5.9L	DBB = All Manual Transmissions
			EV0 = All 4.7L	

Fork and Rail Shift on the Fly (DHV)
Figure 244-910

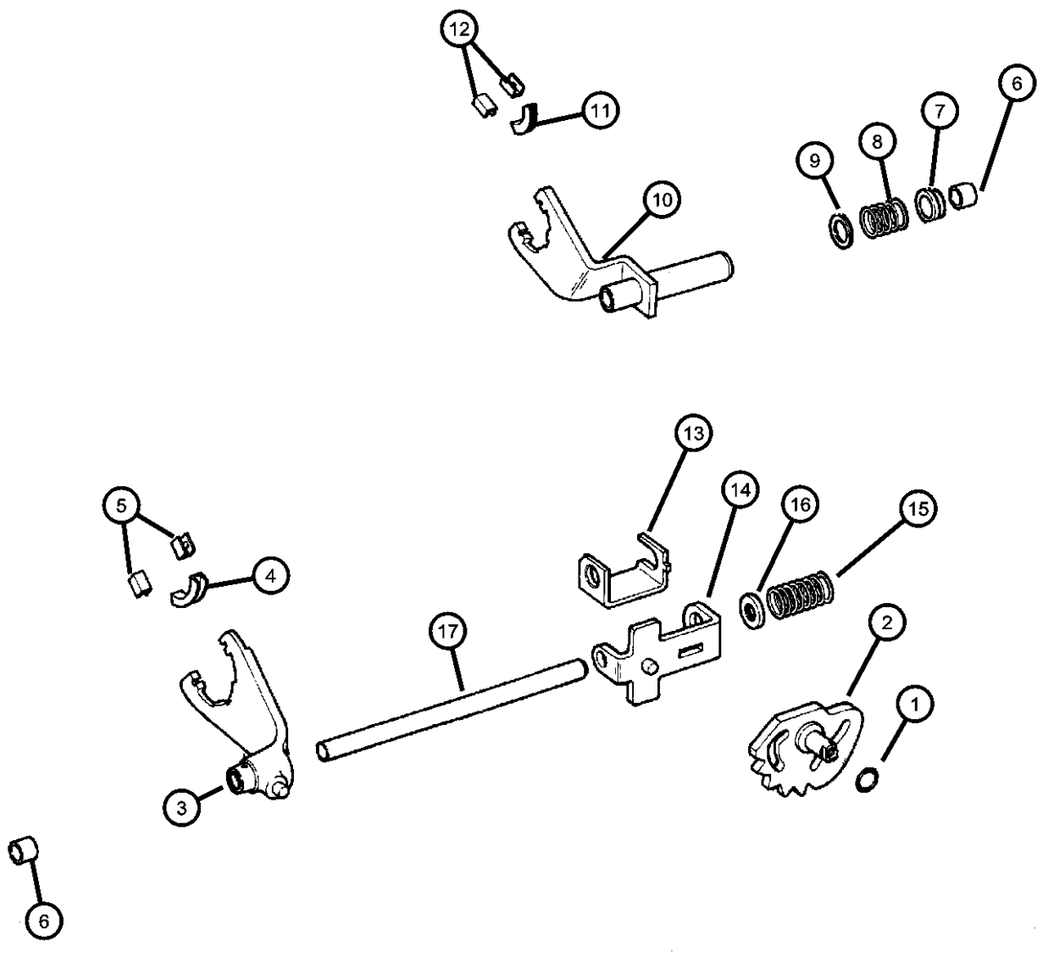

ITEM	PART NUMBER	QTY	LINE	SERIES	BODY	ENGINE	TRANS	TRIM	DESCRIPTION
1	04167963	1	5						SEAL, O-Ring
2	05066383AA	1	5						SECTOR, Transfer Case
3	05019537AB	1	5						FORK, Range
4	05015832AA	1	5						PAD, Shift Fork
5	05012018AA	2	5						PAD, Shift Fork
6	J8134291	2	5						BUSHING, Shift Fork
7	83503514	1	5						BUSHING, Shift Rail
8	05019539AA	1	5						SPRING, Mode Shift Fork
9	83503512	1	5						WASHER, Flat
10	04638950	1	5						FORK, Transfer Case Mode Shift
11	04338376	1	5						PAD, Shift Fork
12	04167969	2	5						PAD, Shift Fork
13	83503511	1	5						BRACKET, Shift Mode
14	83503510	1	5						BRACKET, Shift Mode
15	05066992AA	1	5						SPRING
16	83503515	1	5						CUP, Shift Fork Spring
17	04798135	1	5						RAIL, Transfer Case

DAKOTA (AN)

SERIES	LINE	BODY	ENGINE	TRANSMISSION
L = Dakota (All)	1 = Dakota 2WD	61 = Regular Cab (112 WB)	EPE = 2.5L 4 Cylinder	DGK = 4 Speed Automatic 42RE
	5 = Dakota 4WD	31 = Club Cab (131 WB)	EHC = 3.9L 6 Cylinder	DGT = 4 Speed Automatic 46RE
		84 = Quad Cab (131 WB)	EML = 5.0L 8 Cylinder	DDC = 5 Speed HD Manual
			EVA = 4.7L Magnum V8	DDK = 5 Speed HD Manual
			EP0 = All 2.5L	DG4 = Multispeed Automatic 45RFE
			EH0 = All 3.9L	DG0 = All Automatic Transmissions
			EM0 = All 5.9L	DBB = All Manual Transmissions
			EV0 = All 4.7L	

AR = use ase required - = Non illustrrated part

Skid Plate
Figure 244-1210

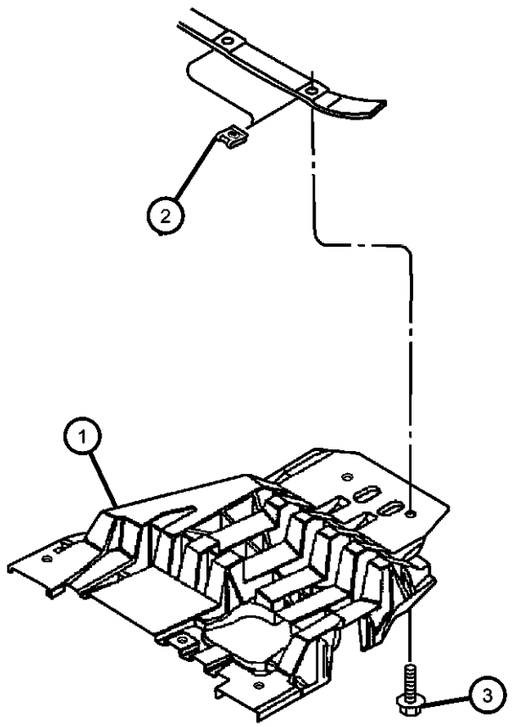

ITEM	PART NUMBER	QTY	LINE	SERIES	BODY	ENGINE	TRANS	TRIM	DESCRIPTION
1	52020479AB	1	5						SKID PLATE, Front
2	06101340	2	5						U-NUT, M10-1.50
3	06506164AA	2	5						SCREW AND WASHER, Hex Head

DAKOTA (AN)

SERIES	LINE	BODY	ENGINE	TRANSMISSION
L = Dakota (All)	1 = Dakota 2WD	61 = Regular Cab (112 WB)	EPE = 2.5L 4 Cylinder	DGK = 4 Speed Automatic 42RE
	5 = Dakota 4WD	31 = Club Cab (131 WB)	EHC = 3.9L 6 Cylinder	DGT = 4 Speed Automatic 46RE
		84 = Quad Cab (131 WB)	EML = 5.0L 8 Cylinder	DDC = 5 Speed HD Manual
			EVA = 4.7L Magnum V8	DDK = 5 Speed HD Manual
			EP0 = All 2.5L	DG4 = Multispeed Automatic 45RFE
			EH0 = All 3.9L	DG0 = All Automatic Transmissions
			EM0 = All 5.9L	DBB = All Manual Transmissions
			EV0 = All 4.7L	

Gearshift Control
Figure 244-1220

ITEM	PART NUMBER	QTY	LINE	SERIES	BODY	ENGINE	TRANS	TRIM	DESCRIPTION
1	05019471AA	1	5						GEAR MOTOR, Transfer Case
2	05066925AA	3	5						BOLT

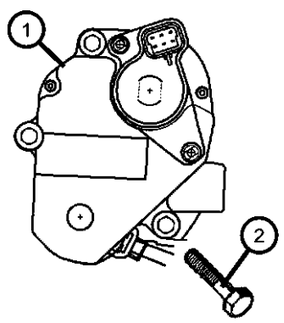

DAKOTA (AN)

SERIES	LINE	BODY	ENGINE	TRANSMISSION
L = Dakota (All)	1 = Dakota 2WD	61 = Regular Cab (112 WB)	EPE = 2.5L 4 Cylinder	DGK = 4 Speed Automatic 42RE
	5 = Dakota 4WD	31 = Club Cab (131 WB)	EHC = 3.9L 6 Cylinder	DGT = 4 Speed Automatic 46RE
		84 = Quad Cab (131 WB)	EML = 5.0L 8 Cylinder	DDC = 5 Speed HD Manual
			EVA = 4.7L Magnum V8	DDK = 5 Speed HD Manual
			EP0 = All 2.5L	DG4 = Multispeed Automatic 45RFE
			EH0 = All 3.9L	DG0 = All Automatic Transmissions
			EM0 = All 5.9L	DBB = All Manual Transmissions
			EV0 = All 4.7L	

Group - 22

Wheels, Covers and Jacks

022-100 Wheels and Hardware	022-200 Wheel Covers and Center Caps	022-300 Jack Stowage	022-400 Spare Tire Stowage
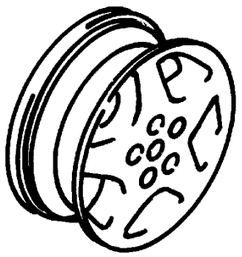	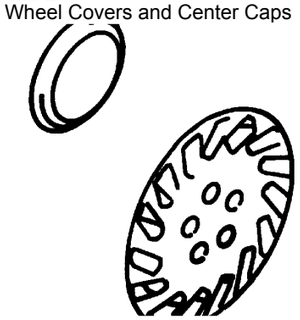	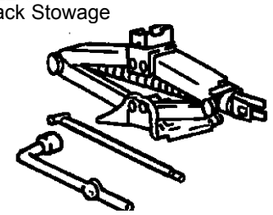	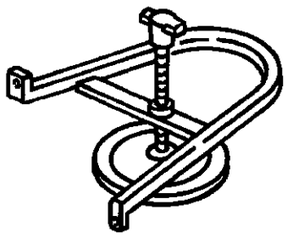

Group - 22 Wheels, Covers and Jacks

Illustration Title — Group-Fig. No.

Wheels and Hardware
Wheels And Hardware ..... Fig. 22 - 110

Wheel Covers and Center Caps
Caps And Covers, Wheel ..... Fig. 22 - 210

Jack Stowage
Jack And Storage Standard Cab ..... Fig. 22 - 310
Jack And Storage Club, Quad Cab ..... Fig. 22 - 320

Spare Tire Stowage
Wheel, Spare Underslung Mounting ..... Fig. 22 - 410

Wheels And Hardware
Figure 22-110

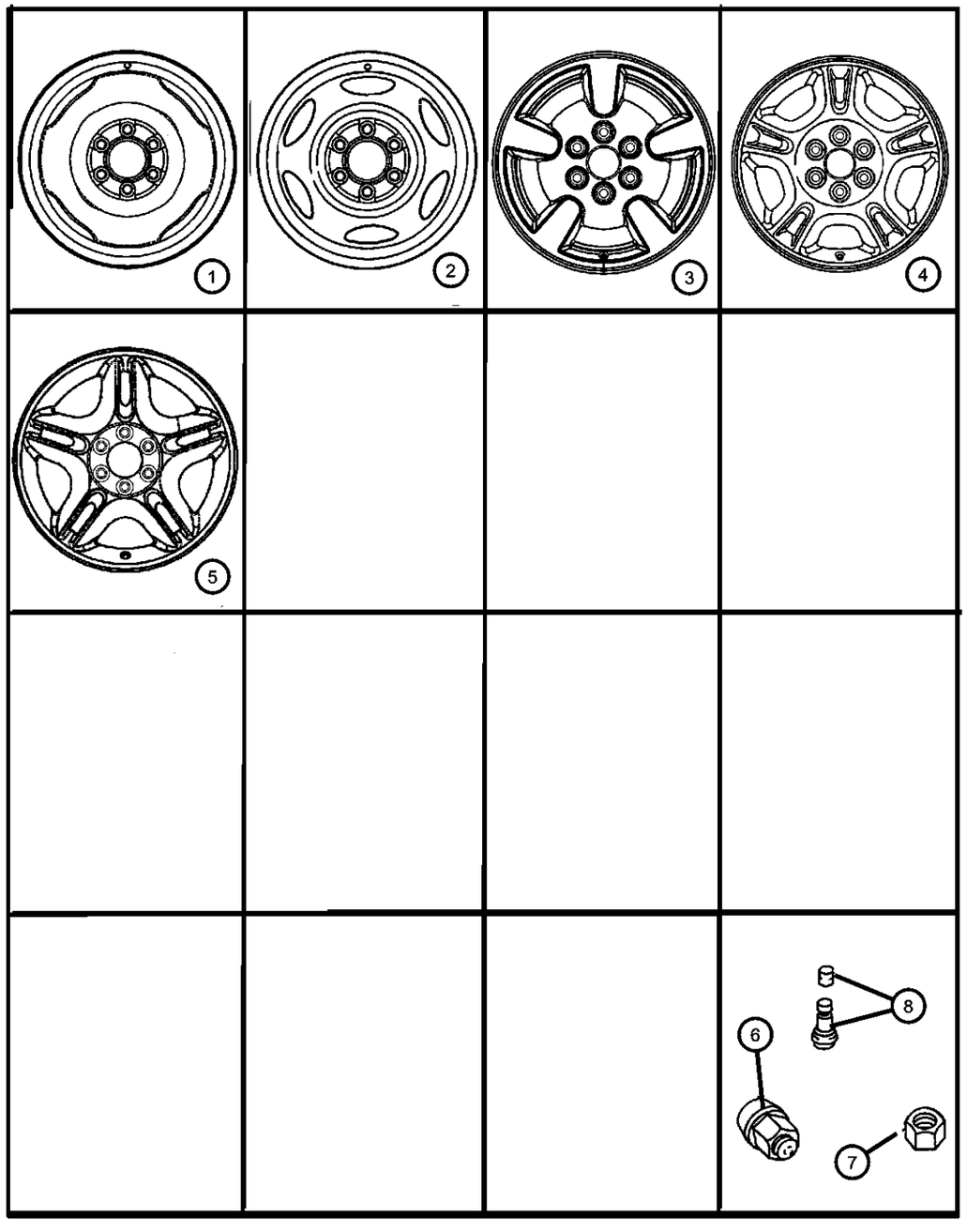

ITEM	PART NUMBER	QTY	LINE	SERIES	BODY	ENGINE	TRANS	TRIM	DESCRIPTION
Note: Sales Code WJH = 15x7.0 Steel Wheels									
Note: Sales Code WJD = 15x7.0 Steel Wheels									
Note: Sales Code WD1 = 16x8.0 Aluminum Wheels									
Note: Sales Code WKH = 15x7.0 Aluminum Wheels									
Note: Sales Code WJ9 = 15x8.0 Aluminum Wheels									
Note: Sales Code WFR = 17x9.0 Aluminum Wheels Painted									
Note: Sales Code WFD = 17x9.0 Aluminum Wheels Chrome									
1									WHEEL, Steel
	52021864AA	1							16x8.0, [WD1,WLD]
	52021865AA	1	1		31, 61				17x7.5, Spare [WFR,WFD]
	52057797	1							15x7.0, Spare [WJD,WKH]
2	5GU04S4AAA	4							WHEEL, Steel, 15x7.0, [WJD]
3	5GR81PAKAA	4							WHEEL, Aluminum, 15x7.0, [WKH]
4	5GR83PAKAB	4							WHEEL, Aluminum, 16x8.0, [WD1]
5									WHEEL, Aluminum
	52021945AA	4	1		31, 61				17x9, [WFD] Chrome
	5FS38PAK	4	1		31, 61				17x9, [WFR] Painted
6	06036310AA	24							NUT, Wheel, .50x20, [WD1,WKH,WJD]
7	06034958	24							NUT, Hex, .50-20, [WFD,WFR]
8	02073355	1							STEM, Wheel Valve

DAKOTA (AN)

SERIES	LINE	BODY	ENGINE	TRANSMISSION
L = Dakota (All)	1 = Dakota 2WD	61 = Regular Cab (112 WB)	EPE = 2.5L 4 Cylinder	DGK = 4 Speed Automatic 42RE
	5 = Dakota 4WD	31 = Club Cab (131 WB)	EHC = 3.9L 6 Cylinder	DGT = 4 Speed Automatic 46RE
		84 = Quad Cab (131 WB)	EML = 5.0L 8 Cylinder	DDC = 5 Speed HD Manual
			EVA = 4.7L Magnum V8	DDK = 5 Speed HD Manual
			EP0 = All 2.5L	DG4 = Multispeed Automatic 45RFE
			EH0 = All 3.9L	DG0 = All Automatic Transmissions
			EM0 = All 5.9L	DBB = All Manual Transmissions
			EV0 = All 4.7L	

Caps And Covers, Wheel
Figure 22-210

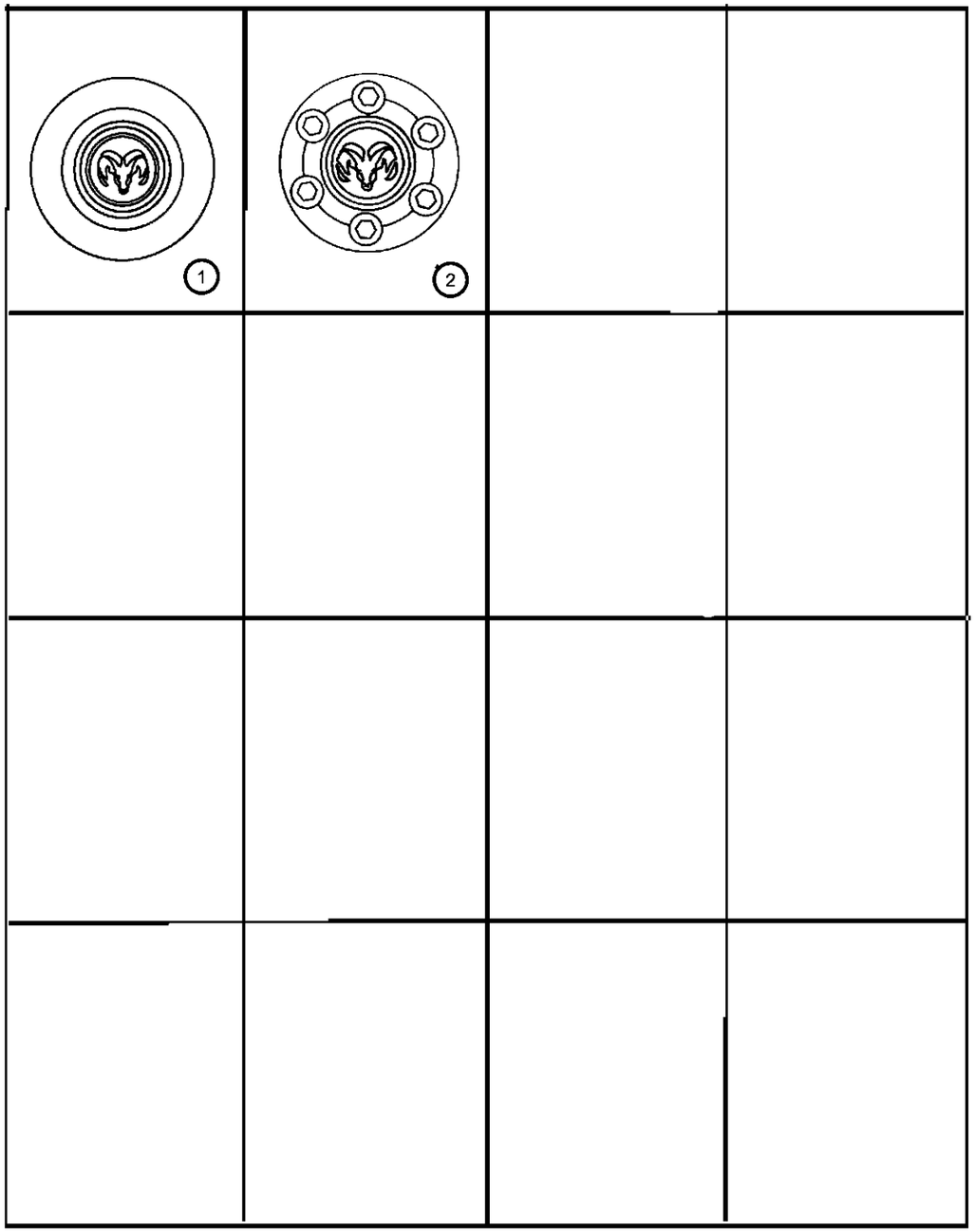

ITEM	PART NUMBER	QTY	LINE	SERIES	BODY	ENGINE	TRANS	TRIM	DESCRIPTION
Note: Sales Code WJK = 15x6.0 Steel Wheels									
Note: Sales Code WJ5 = 15x7.0 Steel Wheels									
Note: Sales Code WJ1 = 15x7.0 Aluminum Wheels									
1									CAP, Wheel Center
	04753123	4							[WD1,WKH]
	52021948AA	4	1		31, 61				[WFD]
	5GH55PAKAA	4	1		31, 61				[WFR]
	5GR02DX9AA	4							[WJD]
2	04753123	4							CAP, Wheel Center

DAKOTA (AN)

SERIES	LINE	BODY	ENGINE	TRANSMISSION
L = Dakota (All)	1 = Dakota 2WD	61 = Regular Cab (112 WB)	EPE = 2.5L 4 Cylinder	DGK = 4 Speed Automatic 42RE
	5 = Dakota 4WD	31 = Club Cab (131 WB)	EHC = 3.9L 6 Cylinder	DGT = 4 Speed Automatic 46RE
		84 = Quad Cab (131 WB)	EML = 5.0L 8 Cylinder	DDC = 5 Speed HD Manual
			EVA = 4.7L Magnum V8	DDK = 5 Speed HD Manual
			EP0 = All 2.5L	DG4 = Multispeed Automatic 45RFE
			EH0 = All 3.9L	DG0 = All Automatic Transmissions
			EM0 = All 5.9L	DBB = All Manual Transmissions
			EV0 = All 4.7L	

Jack And Storage Standard Cab
Figure 22-310

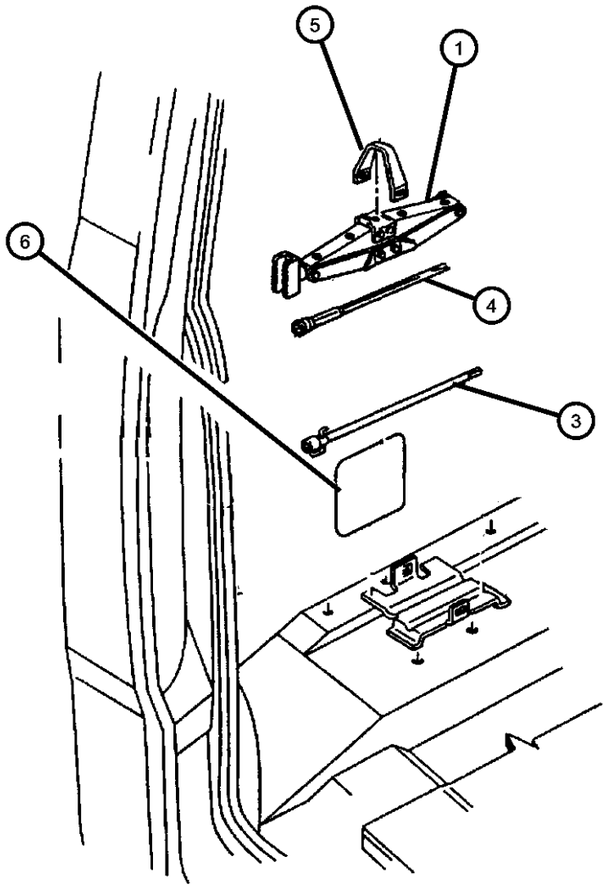

ITEM	PART NUMBER	QTY	LINE	SERIES	BODY	ENGINE	TRANS	TRIM	DESCRIPTION
1	52019921AB	1							JACK
-2	55350304AB	1							BAG, Jack Tool Storage
3	52019870	2							EXTENSION, Jack Handle T Bar
4	52039118	1							DRIVER, Jack Handle
5	55257276AA	1			61				BRACKET, Jack
6	55257276AA	1							LABEL, Jack Instructions, 52019655, (NOT SERVICED)

DAKOTA (AN)

SERIES	LINE	BODY	ENGINE	TRANSMISSION
L = Dakota (All)	1 = Dakota 2WD	61 = Regular Cab (112 WB)	EPE = 2.5L 4 Cylinder	DGK = 4 Speed Automatic 42RE
	5 = Dakota 4WD	31 = Club Cab (131 WB)	EHC = 3.9L 6 Cylinder	DGT = 4 Speed Automatic 46RE
		84 = Quad Cab (131 WB)	EML = 5.0L 8 Cylinder	DDC = 5 Speed HD Manual
			EVA = 4.7L Magnum V8	DDK = 5 Speed HD Manual
			EP0 = All 2.5L	DG4 = Multispeed Automatic 45RFE
			EH0 = All 3.9L	DG0 = All Automatic Transmissions
			EM0 = All 5.9L	DBB = All Manual Transmissions
			EV0 = All 4.7L	

Jack And Storage Club, Quad Cab
Figure 22-320

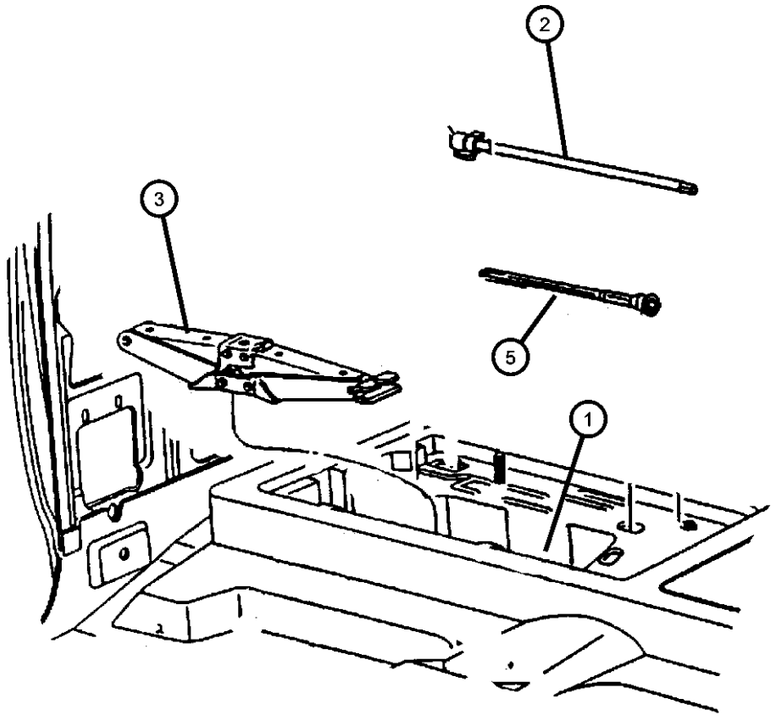

ITEM	PART NUMBER	QTY	LINE	SERIES	BODY	ENGINE	TRANS	TRIM	DESCRIPTION
1	52019655	1							LABEL, Jack Instructions
2	52019870	2							EXTENSION, Jack Handle T Bar
3	52019921AB	1							JACK
-4	55350304AB	1							BAG, Jack Tool Storage
5	52039118	1							DRIVER, Jack Handle
-6	52021315AB	1			84				STRAP, Jack Storage
-7	52019871AB	1							TOOL, Wrench

DAKOTA (AN)

SERIES	LINE	BODY	ENGINE	TRANSMISSION
L = Dakota (All)	1 = Dakota 2WD	61 = Regular Cab (112 WB)	EPE = 2.5L 4 Cylinder	DGK = 4 Speed Automatic 42RE
	5 = Dakota 4WD	31 = Club Cab (131 WB)	EHC = 3.9L 6 Cylinder	DGT = 4 Speed Automatic 46RE
		84 = Quad Cab (131 WB)	EML = 5.0L 8 Cylinder	DDC = 5 Speed HD Manual
			EVA = 4.7L Magnum V8	DDK = 5 Speed HD Manual
			EP0 = All 2.5L	DG4 = Multispeed Automatic 45RFE
			EH0 = All 3.9L	DG0 = All Automatic Transmissions
			EM0 = All 5.9L	DBB = All Manual Transmissions
			EV0 = All 4.7L	

Wheel, Spare Underslung Mounting
Figure 22-410

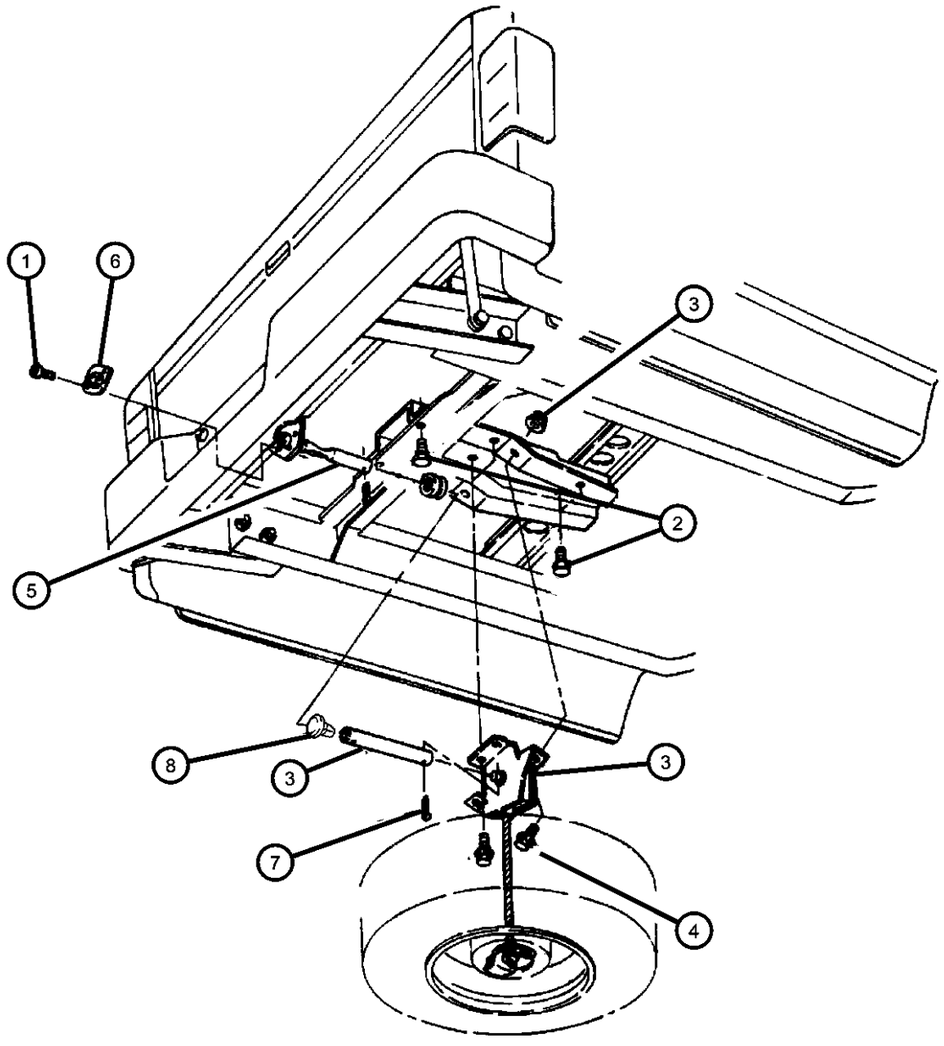

ITEM	PART NUMBER	QTY	LINE	SERIES	BODY	ENGINE	TRANS	TRIM	DESCRIPTION
1	52019871AB	1							SCREW, (NOT SERVICED)
2	52019871AB	1							SCREW, (NOT SERVICED)
3	52019555	1							WINCH, Spare Tire Carrier
4									SCREW AND WASHER, Hex Head, M8x1.25x20
	06102002	4			31, 61				
		8			84				
5	52019565	1							EXTENSION, Spare Tire Winch
6	52019659	1							GROMMET, Spare Tire Winch Tube
7	00120123	2							PIN, Cotter
8	02860332	1							PLUG, Anti-Rattle

DAKOTA (AN)

SERIES	LINE	BODY	ENGINE	TRANSMISSION
L = Dakota (All)	1 = Dakota 2WD	61 = Regular Cab (112 WB)	EPE = 2.5L 4 Cylinder	DGK = 4 Speed Automatic 42RE
	5 = Dakota 4WD	31 = Club Cab (131 WB)	EHC = 3.9L 6 Cylinder	DGT = 4 Speed Automatic 46RE
		84 = Quad Cab (131 WB)	EML = 5.0L 8 Cylinder	DDC = 5 Speed HD Manual
			EVA = 4.7L Magnum V8	DDK = 5 Speed HD Manual
			EP0 = All 2.5L	DG4 = Multispeed Automatic 45RFE
			EH0 = All 3.9L	DG0 = All Automatic Transmissions
			EM0 = All 5.9L	DBB = All Manual Transmissions
			EV0 = All 4.7L	

Group - 23D

Wiper/Lock Cylinder and Keys

23D-100 Lock Cylinders and Keys 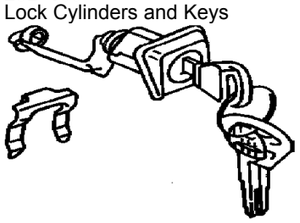	**23D-200** Windshield Wiper and Washer Systems 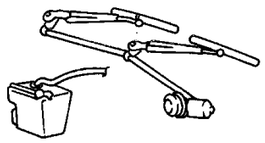		

Group - 23D Wiper/Lock Cylinder and Keys

Illustration Title — Group-Fig. No.

Lock Cylinders and Keys
Lock Cylinders & Components ..... Fig. 23D - 110

Windshield Wiper and Washer Systems
Windshield Wiper & Washer ..... Fig. 23D - 210

Lock Cylinders & Components
Figure 23D-110

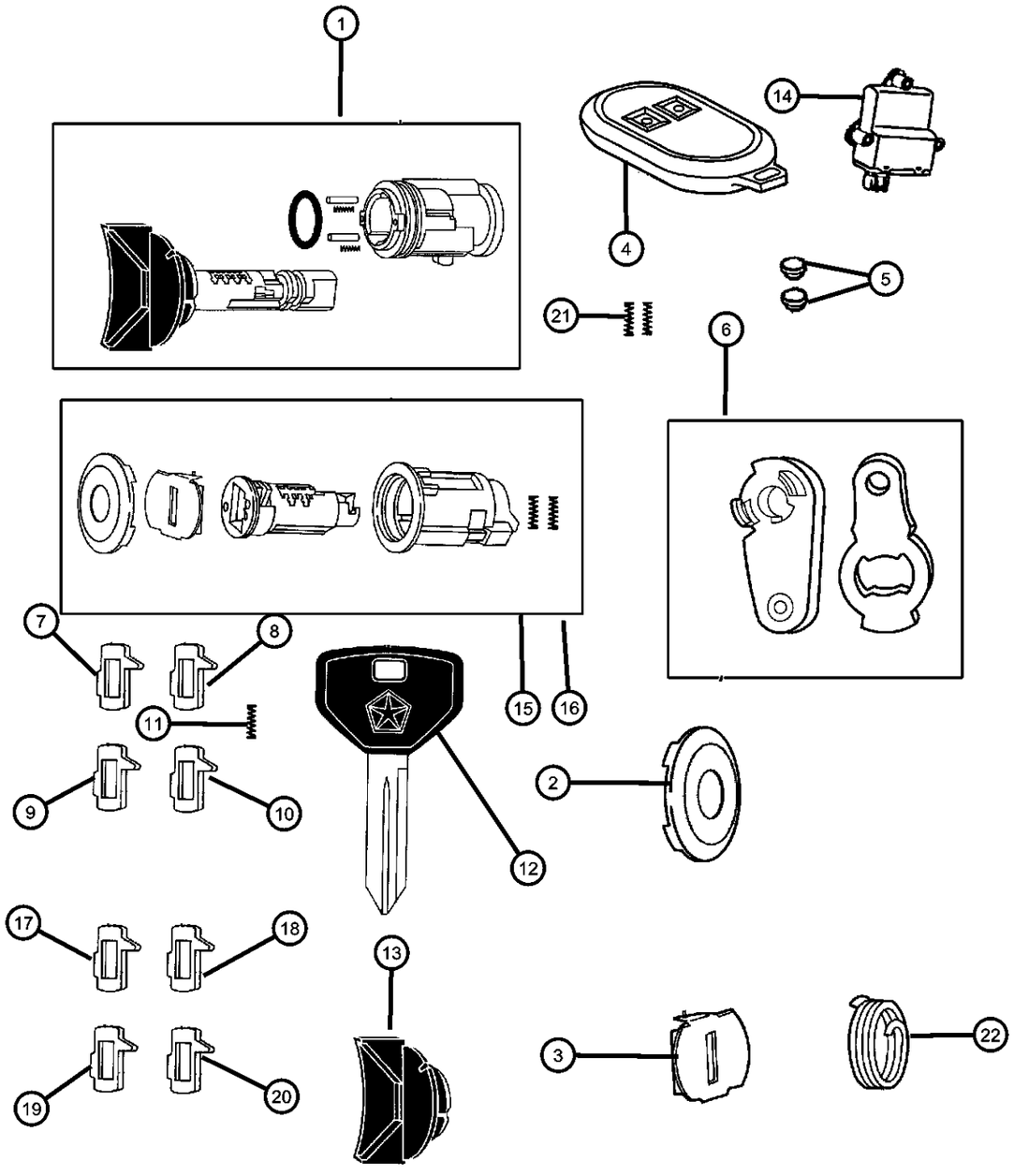

ITEM	PART NUMBER	QTY	LINE	SERIES	BODY	ENGINE	TRANS	TRIM	DESCRIPTION
NOTE: ALL LOCK CYLINDERS ARE UNCODED									
1	05018702AA	1							CYLINDER, Ignition Lock
2	04778149	1							CAP, Door Lock Cylinder, Bright
3	04778150	1							SHUTTER, Door, Deck and Liftgate, Bright
4	04686481AC	2							TRANSMITTER, Keyless Entry
5	83504802	2							BATTERY, Transmitter
6	04717288	1							LEVER, Front Door Cylinder
7	05010879AA	1							TUMBLER, Ignition Number 1, Sidebar
8	05010880AA	1							TUMBLER, Ignition Number 2, Sidebar
9	05010881AA	1							TUMBLER, Ignition Number 3, Sidebar
10	05010882AA	1							TUMBLER, Ignition Number 4, Sidebar
11	05010883AB	1							SPRING, Ignition Tumbler, Sidebar
12									KEY, Blank
	05018689AA	2							Rams Head Key (w/o Sentry Theft Deterrent System)
	05018690AA	2							Smart Key (w Sentry Theft Deterrent System)
13	05018690AA	2							CAP, Ignition Cylinder, Black Plastic, Serviced w/Ignition Cylinder, (NOT SERVICED),
14									MODULE, Time and Alarm
	56049071AG	1							Without Keyless Entry
	56049072AG	1							With Keyless Entry
15	04778125	1							LOCK CYLINDER, Door/Liftgate
16	05011040AA	1							CYLINDER, Door Lock, With Keyless Entry
17	04778117	1	1						TUMBLER, Door and Deck Number 1, Wide
18	04778118	1	1						TUMBLER, Door and Deck Number 2, Wide
19	04778119	1	1						TUMBLER, Door and Deck Number 3, Wide
20	04778120	1	1						TUMBLER, Door and Deck Number 4, Wide
21	04778121	1	1						SPRING, Door and Deck Tumbler

DAKOTA (AN)

SERIES	LINE	BODY	ENGINE	TRANSMISSION
L = Dakota (All)	1 = Dakota 2WD 5 = Dakota 4WD	61 = Regular Cab (112 WB) 31 = Club Cab (131 WB) 84 = Quad Cab (131 WB)	EPE = 2.5L 4 Cylinder EHC = 3.9L 6 Cylinder EML = 5.0L 8 Cylinder EVA = 4.7L Magnum V8 EP0 = All 2.5L EH0 = All 3.9L EM0 = All 5.9L EV0 = All 4.7L	DGK = 4 Speed Automatic 42RE DGT = 4 Speed Automatic 46RE DDC = 5 Speed HD Manual DDK = 5 Speed HD Manual DG4 = Multispeed Automatic 45RFE DG0 = All Automatic Transmissions DBB = All Manual Transmissions

Lock Cylinders & Components
Figure 23D-110

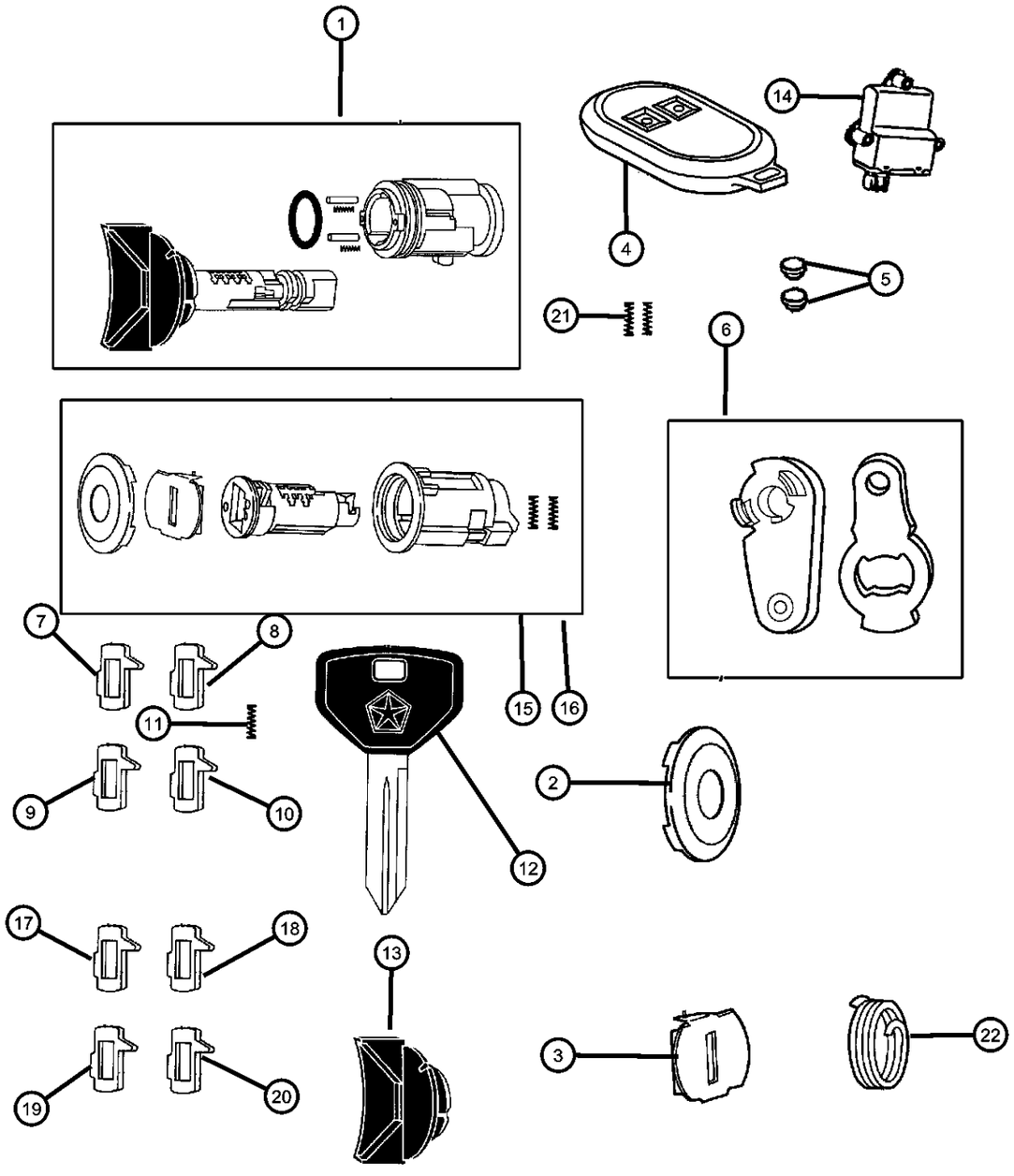

ITEM	PART NUMBER	QTY	LINE	SERIES	BODY	ENGINE	TRANS	TRIM	DESCRIPTION
22	04378793	1	1						SPRING, Cylinder Return
-23									CLIP, Latch
	04658444	1							Purple
	04658445	1							Orange
-24	05019605AA	1							SHUTTER, Lock Cylinder

DAKOTA (AN)

SERIES	LINE	BODY	ENGINE	TRANSMISSION
L = Dakota (All)	1 = Dakota 2WD	61 = Regular Cab (112 WB)	EPE = 2.5L 4 Cylinder	DGK = 4 Speed Automatic 42RE
	5 = Dakota 4WD	31 = Club Cab (131 WB)	EHC = 3.9L 6 Cylinder	DGT = 4 Speed Automatic 46RE
		84 = Quad Cab (131 WB)	EML = 5.0L 8 Cylinder	DDC = 5 Speed HD Manual
			EVA = 4.7L Magnum V8	DDK = 5 Speed HD Manual
			EP0 = All 2.5L	DG4 = Multispeed Automatic 45RFE
			EH0 = All 3.9L	DG0 = All Automatic Transmissions
			EM0 = All 5.9L	DBB = All Manual Transmissions
			EV0 = All 4.7L	

Windshield Wiper & Washer
Figure 23D-210

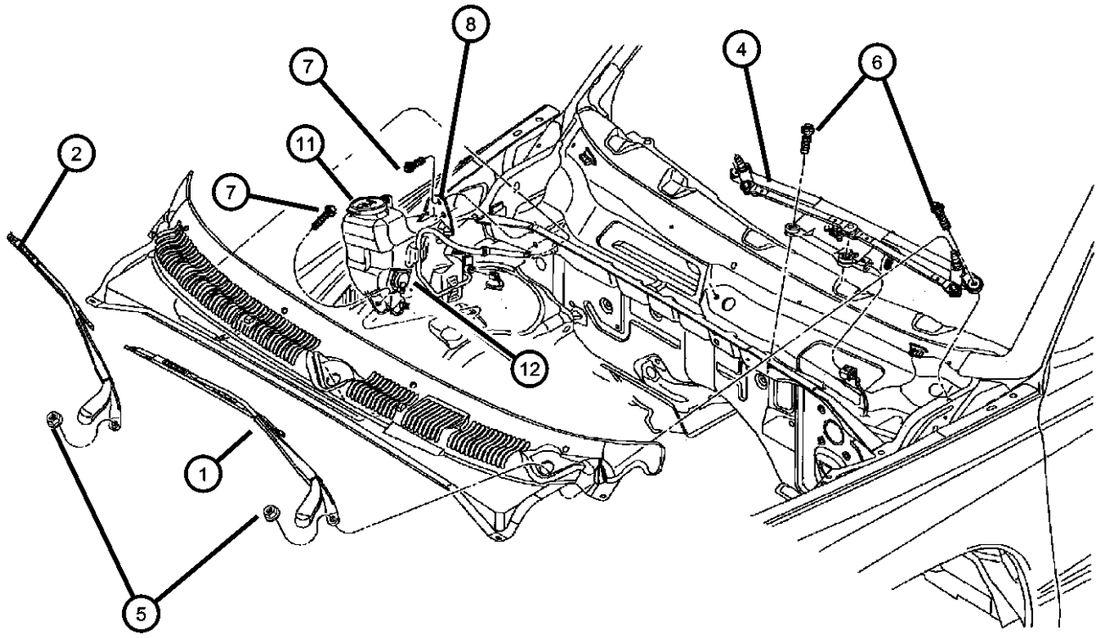

ITEM	PART NUMBER	QTY	LINE	SERIES	BODY	ENGINE	TRANS	TRIM	DESCRIPTION
1									ARM, Wiper
	55154854AD	1							Right
	WBFLAT03AA								Mopar Alternative Flat Blade Set
	55154897AC	1							Left
	WBFLAT03AA								Mopar Alternative Flat Blade Set
2									BLADE, Wiper
	55077090AC	1							Right
	WBW00021AD								Mopar Alternative Winter Wiper Blades
	WB000021AE								Mopar V-Line Alternative Part
	WB-BLU021AA								Mopar Alternative Color Wiper Blade (Blue)
	WBRED021AA								Mopar Alternative Color Wiper Blade (Red)
	WB-WHI021AA								Mopar Alternative Color Wiper Blade (White)
	WBYEL021AA								Mopar Alternative Color Wiper Blade (Yellow)
	WB-CAR021AA								Mopar Alternative Color Wiper Blade (Carbon Fiber)
	55077091AB	1							Left
	WBW00021AD								Mopar Alternative Winter Wiper Blades
	WB000021AE								Mopar V-Line Alternative Part
	WB-BLU021AA								Mopar Alternative Color Wiper Blade (Blue)
	WBRED021AA								Mopar Alternative Color Wiper Blade (Red)
	WB-WHI021AA								Mopar Alternative Color Wiper Blade (White)
	WBYEL021AA								Mopar Alternative Color Wiper Blade (Yellow)
	WB-CAR021AA								Mopar Alternative Color Wiper Blade (Carbon Fiber)
-3	55077338AA	2							NOZZLE, Washer, Windshield
4	55154863AC	1							MOTOR, Wiper
5	06503335	2							NUT, Hex, M10X1.25
6	06100568	5			31				BOLT AND WASHER, Implement Attaching
7	06100568	5							SCREW, (NOT SERVICED)

DAKOTA (AN)

SERIES	LINE	BODY	ENGINE	TRANSMISSION
L = Dakota (All)	1 = Dakota 2WD	61 = Regular Cab (112 WB)	EPE = 2.5L 4 Cylinder	DGK = 4 Speed Automatic 42RE
	5 = Dakota 4WD	31 = Club Cab (131 WB)	EHC = 3.9L 6 Cylinder	DGT = 4 Speed Automatic 46RE
		84 = Quad Cab (131 WB)	EML = 5.0L 8 Cylinder	DDC = 5 Speed HD Manual
			EVA = 4.7L Magnum V8	DDK = 5 Speed HD Manual
			EP0 = All 2.5L	DG4 = Multispeed Automatic 45RFE
			EH0 = All 3.9L	DG0 = All Automatic Transmissions
			EM0 = All 5.9L	DBB = All Manual Transmissions
			EV0 = All 4.7L	

Windshield Wiper & Washer
Figure 23D-210

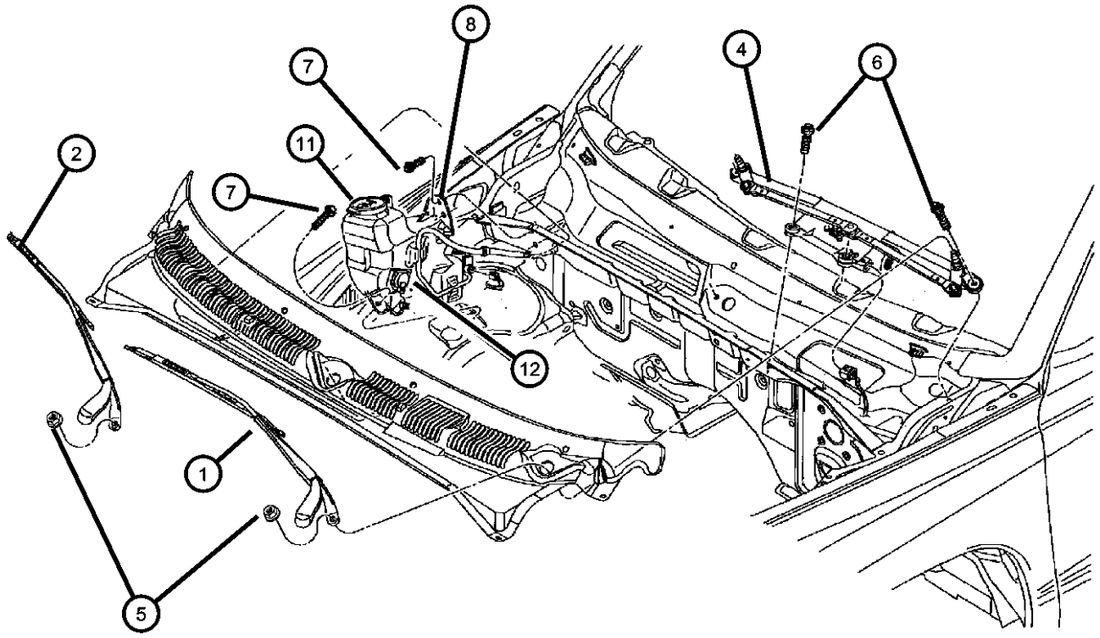

ITEM	PART NUMBER	QTY	LINE	SERIES	BODY	ENGINE	TRANS	TRIM	DESCRIPTION
8									SHROUD MODULE, Fan
	05015532AB	1							With Washer Reservoir [EH0]
	05015534AB	1							With Washer Reservoir [EP0] [EM0]
-9	55077351AA	1							SENSOR, Washer Fluid Level
-10	05013755AA	1							GROMMET, Washer Reservoir
11	55077261AA	1							CAP, Washer Reservoir
12	55077301AB	1							PUMP, Washer, Windshield
-13	55155765AA	2							CAP, Wiper Arm Nut
-14	55077204AA	1							HOSE, Washer Reservoir
-15	55077339AA	1							HOSE, Windshield Washer, With Check Valve (Cowl Grille)
-16	HWV00532AB	1							HOSE 1FT, Windshield Washer, 5/32"
-17	HWV00764AB	1							HOSE 1FT, Windshield Washer, 7/64"

DAKOTA (AN)

SERIES	LINE	BODY	ENGINE	TRANSMISSION
L = Dakota (All)	1 = Dakota 2WD	61 = Regular Cab (112 WB)	EPE = 2.5L 4 Cylinder	DGK = 4 Speed Automatic 42RE
	5 = Dakota 4WD	31 = Club Cab (131 WB)	EHC = 3.9L 6 Cylinder	DGT = 4 Speed Automatic 46RE
		84 = Quad Cab (131 WB)	EML = 5.0L 8 Cylinder	DDC = 5 Speed HD Manual
			EVA = 4.7L Magnum V8	DDK = 5 Speed HD Manual
			EP0 = All 2.5L	DG4 = Multispeed Automatic 45RFE
			EH0 = All 3.9L	DG0 = All Automatic Transmissions
			EM0 = All 5.9L	DBB = All Manual Transmissions
			EV0 = All 4.7L	

Group - 24

Air Conditioning & Heater

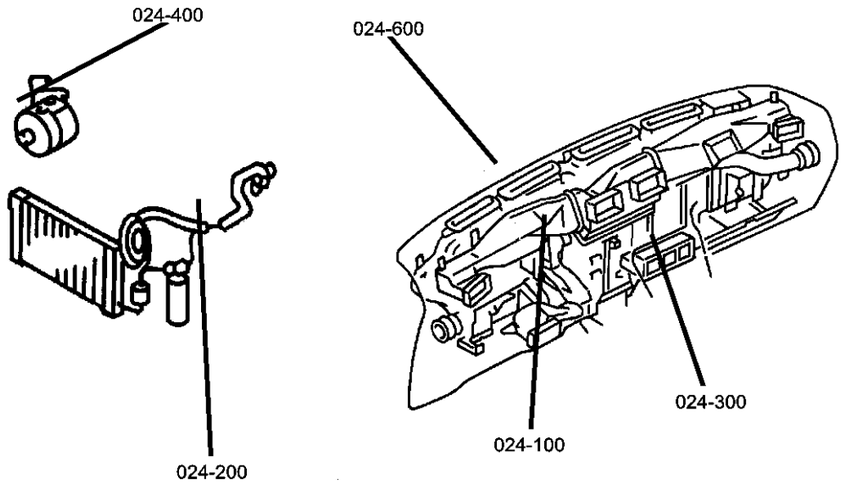

024-100 Air Conditioner and Heater Units 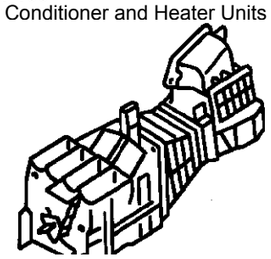	**024-200** Air Conditioner and Heater Plumbing 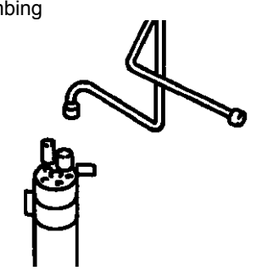	**024-300** Air Conditioner and Heater Controls 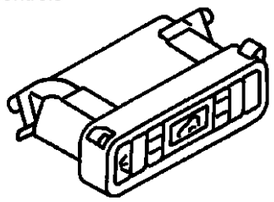	**024-400** Air Conditioning Compressor 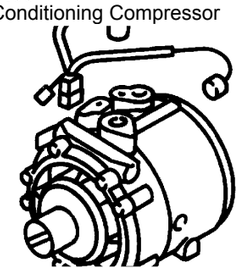
024-500 Air Conditioning Compressor Mounting 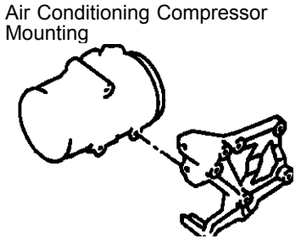	**024-600** Air Ducts and Outlets 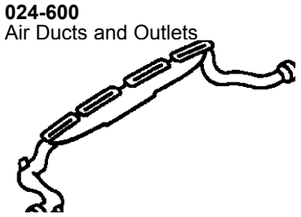		

Group - 24 Air Conditioning & Heater

Illustration Title — Group-Fig. No.

Air Conditioner and Heater Units
Heater and Air Conditioning Unit ..... Fig. 24 - 120

Air Conditioner and Heater Plumbing
Plumbing, Heater And Air Conditioning, 2.5L Engine ..... Fig. 24 - 210
Plumbing, Heater And Air Conditioning, 3.9,5.9L Engine ..... Fig. 24 - 220
Plumbing, Heater And Air Conditioning, 4.7L Engine ..... Fig. 24 - 230

Air Conditioner and Heater Controls
Control, Heater ..... Fig. 24 - 305
Control, Air Conditioning ..... Fig. 24 - 310

Air Conditioning Compressor
Compressor, Air Conditioning ..... Fig. 24 - 405

Air Conditioning Compressor Mounting
Mounting, Compressor 2.5L Engine ..... Fig. 24 - 505
Mounting, Compressor 3.9L, 5.9L Engine ..... Fig. 24 - 507
Compressor, Air Conditioning 4.7L Engine ..... Fig. 24 - 510
Mounting, Compressor 4.7L Engine ..... Fig. 24 - 520

Air Ducts and Outlets
Air Ducts ..... Fig. 24 - 605

Heater and Air Conditioning Unit
Figure 24-120

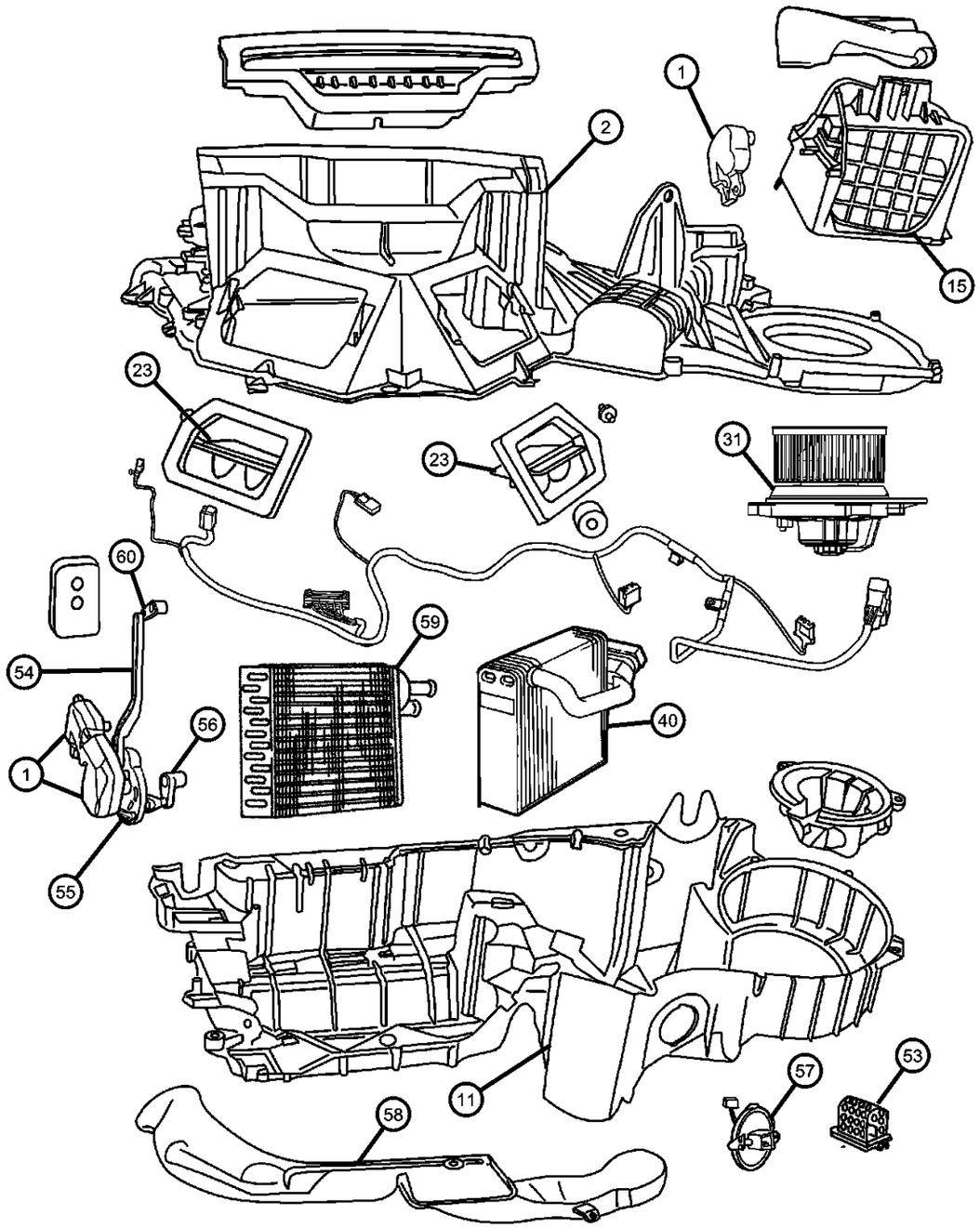

ITEM	PART NUMBER	QTY	LINE	SERIES	BODY	ENGINE	TRANS	TRIM	DESCRIPTION
1	04885465AA	3							ACTUATOR, A/C and Heater
2	05019690AA	1							HOUSING, Evaporater Upper
-3	05019690AA	1							HOUSING, A/C Upper, (NOT SERVICED)
-4	05019690AA	1							DOOR, Panel, (NOT SERVICED)
-5	05019690AA	1							DOOR, Panel, (NOT SERVICED)
-6	05019690AA	1							LEVER, Panel Door, (NOT SERVICED)
-7	05019690AA	1							LINK ROD, Panel Door, (NOT SERVICED)
-8	05019690AA	1							SHAFT, A/C and Heater Door, (NOT SERVICED)
-9	05019690AA	1							DOOR, Defroster, (NOT SERVICED)
-10	05019690AA	1							LEVER, Defroster Door, (NOT SERVICED)
11	05019694AA	1							HOUSING, Housing And Stud Assy
-12	05019694AA	1							HOUSING AND STUD, Heater, (NOT SERVICED)
-13	05019694AA	1							DOOR, Floor, (NOT SERVICED)
-14	05019694AA	1							LEVER, Floor Door, (NOT SERVICED)
15	05019692AA	1							HOUSING, Air Inlet
-16	05019692AA	1							HOUSING, Air Recirculating, (NOT SERVICED)
-17	05019692AA	1							DOOR, Recirculation, (NOT SERVICED)
-18	05019692AA	1							SEAL, Recirculation Door, Upper, (NOT SERVICED)
-19	05019692AA	1							SEAL, Recirculation Door, Lower, (NOT SERVICED)
-20	05019692AA	1							ADAPTER, (NOT SERVICED)
-21	05019692AA	1							SEAL, Air Inlet, (NOT SERVICED)
-22	06101308	1							NUT, U, M6x1.00
23	05019693AB	1							MODULE, Blend Air
-24	05019693AB	1							MODULE, Blend Air, (NOT SERVICED)
-25	05019693AB	1							HOUSING, A/C And Heater, Blend Door, (NOT SERVICED)
-26	05019693AB	1							PLATE, Diverter, (NOT SERVICED)

DAKOTA (AN)

SERIES	LINE	BODY	ENGINE	TRANSMISSION
L = Dakota (All)	1 = Dakota 2WD	61 = Regular Cab (112 WB)	EPE = 2.5L 4 Cylinder	DGK = 4 Speed Automatic 42RE
	5 = Dakota 4WD	31 = Club Cab (131 WB)	EHC = 3.9L 6 Cylinder	DGT = 4 Speed Automatic 46RE
		84 = Quad Cab (131 WB)	EML = 5.0L 8 Cylinder	DDC = 5 Speed HD Manual
			EVA = 4.7L Magnum V8	DDK = 5 Speed HD Manual
			EP0 = All 2.5L	DG4 = Multispeed Automatic 45RFE
			EH0 = All 3.9L	DG0 = All Automatic Transmissions
			EM0 = All 5.9L	DBB = All Manual Transmissions
			EV0 = All 4.7L	

AR = use ase required - = Non illustrrated part

Heater and Air Conditioning Unit
Figure 24-120

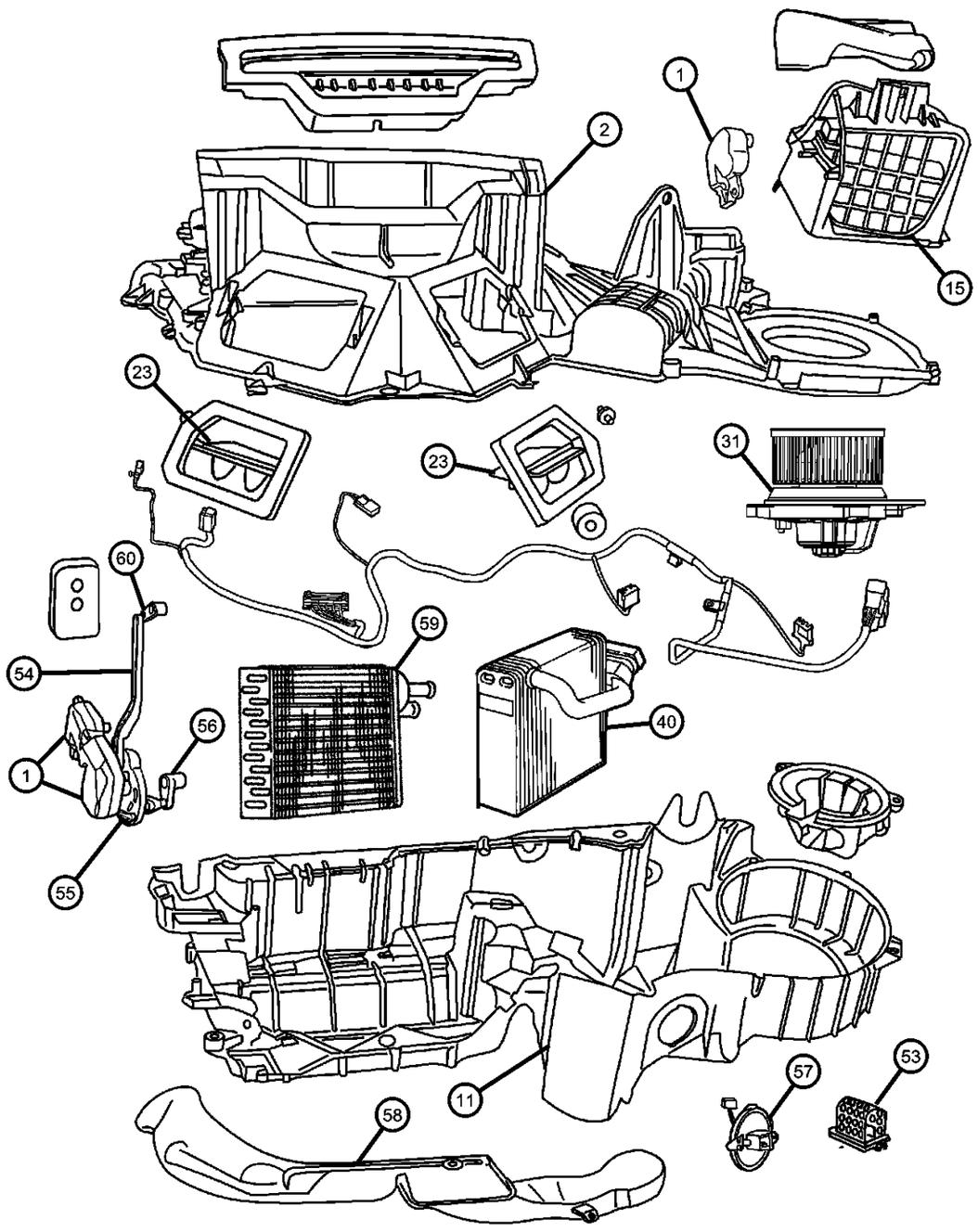

ITEM	PART NUMBER	QTY	LINE	SERIES	BODY	ENGINE	TRANS	TRIM	DESCRIPTION
-27	05019693AB	1							DOOR, Blend Air, (NOT SERVICED)
-28	05019693AB	1							DOOR, Blend Air, Aux, (NOT SERVICED)
-29	05019693AB	1							LINK, Heater and Defroster Door, (NOT SERVICED)
-30	05019693AB	1							SHAFT, Blend Air Door, (NOT SERVICED)
31	04885669AB	1							MOTOR, Blower with Wheel
-32	04885669AB	1							MOTOR, Blower, (NOT SERVICED)
-33	04885669AB	1							HOUSING, Blower Motor, (NOT SERVICED)
-34	04885669AB	1							WHEEL, Blower, (NOT SERVICED)
-35	04885669AB	1							DAMPER, Vibration, motor, (NOT SERVICED)
-36	04885669AB	1							CLIP, Balancing, (NOT SERVICED)
-37	06031694	3							SCREW AND WASHER, Hex Head, .164-18x1.0
-38	04734239	1							CAP, Blower Motor
-39	04707091	1							CLIP, Wiring
40	05019696AB	1							EVAPORATOR KIT, A/C
-41	05019696AB	1							EVAPORATOR, Air Conditioning, (NOT SERVICED)
-42	05019696AB	1							LINER, Evaporator, (NOT SERVICED)
-43	05019696AB	1							ISOLATOR, Tube, (NOT SERVICED)
-44	05019696AB	1							SEAL, Heater Core Tubes, (NOT SERVICED)
-45	05019696AB	1							SEAL, Evaporator, (NOT SERVICED)
-46	05019696AB	1							SEAL, Panel, Door, (NOT SERVICED)
-47	05019696AB	1							SEAL, Demister, Defrost, (NOT SERVICED)
-48	05019696AB	1							SEAL, Evaporator To Dash, (NOT SERVICED)
-49	05019696AB	1							SEAL, Floor Duct, (NOT SERVICED)
-50	05019696AB	1							SEAL, Drain Tube, 048858759AA, (NOT SERVICED)

DAKOTA (AN)

SERIES	LINE	BODY	ENGINE	TRANSMISSION
L = Dakota (All)	1 = Dakota 2WD	61 = Regular Cab (112 WB)	EPE = 2.5L 4 Cylinder	DGK = 4 Speed Automatic 42RE
	5 = Dakota 4WD	31 = Club Cab (131 WB)	EHC = 3.9L 6 Cylinder	DGT = 4 Speed Automatic 46RE
		84 = Quad Cab (131 WB)	EML = 5.0L 8 Cylinder	DDC = 5 Speed HD Manual
			EVA = 4.7L Magnum V8	DDK = 5 Speed HD Manual
			EP0 = All 2.5L	DG4 = Multispeed Automatic 45RFE
			EH0 = All 3.9L	DG0 = All Automatic Transmissions
			EM0 = All 5.9L	DBB = All Manual Transmissions
			EV0 = All 4.7L	

Heater and Air Conditioning Unit
Figure 24-120

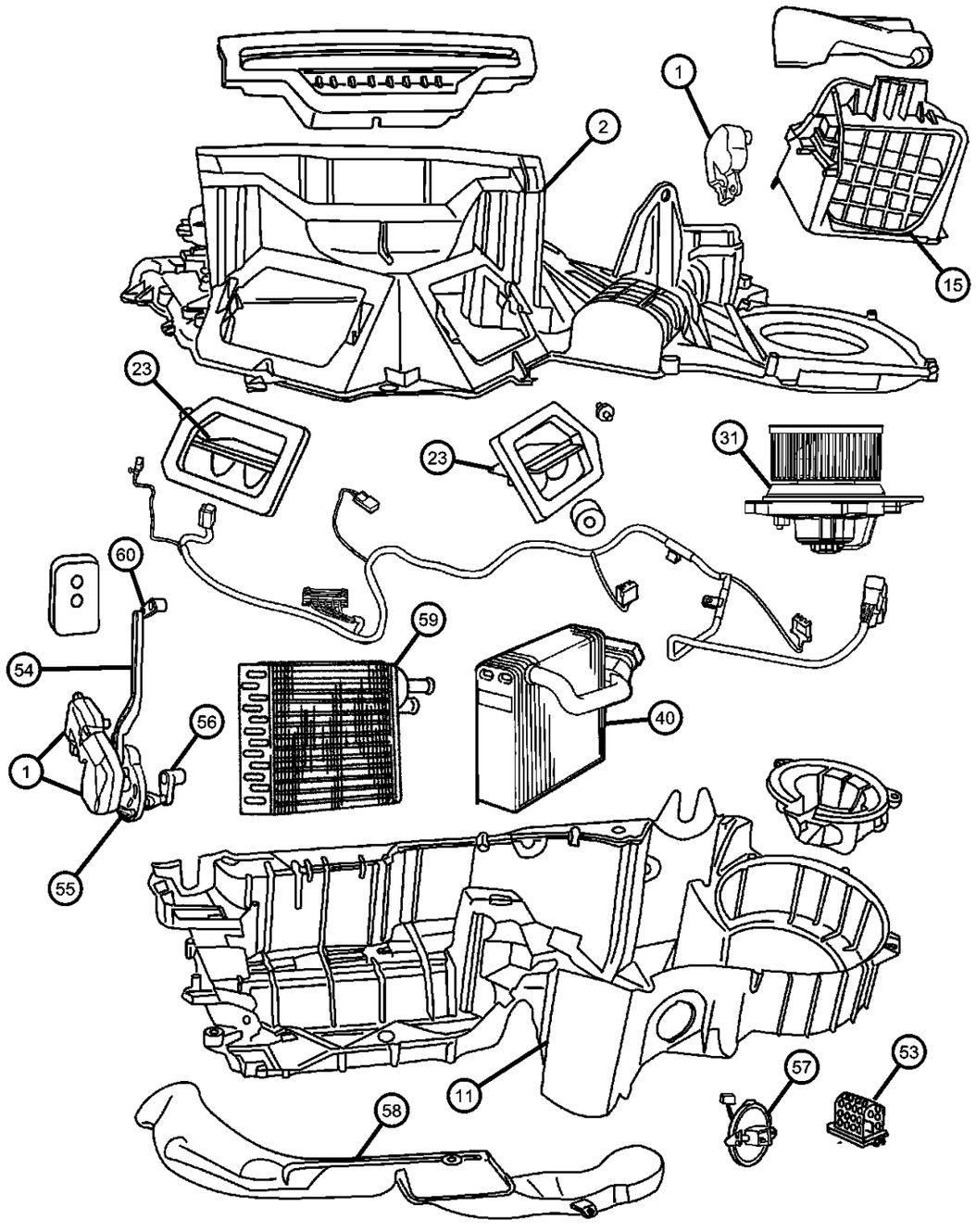

ITEM	PART NUMBER	QTY	LINE	SERIES	BODY	ENGINE	TRANS	TRIM	DESCRIPTION
-51	06031087	4							WASHER, A/C Unit Mounting Stud
-52	06031087	4							CAP, Screw Cover, (NOT SERVICED)
53	04885635AC	1							RESISTOR, A/C Heater
54	04885645AB	1							LINK ROD, Defrost Door
55	04885754AB	1							CAM, Mode
56	04885756AA	1							LEVER
57	05061064AA	1							PROBE, Air Conditioning
58									DUCT, Floor
	04885680AA	1							[Up To 12-4-01], Right
	04885843AA	1							[Up To 12-4-01],
	05061250AA	1							One Piece Design [After 12-4-01]
59	05019695AA	1							HEATER KIT, Heater Core Assembly
60	05019695AA	1							LEVER, Defroster Door, Serviced in Upper Housing Only, (NOT SERVICED)
-61	05086380AC	1							SEAL KIT, A/C And Heater Unit
-62	04885761AA	1							GROMMET, A/C Probe

DAKOTA (AN)

SERIES	LINE	BODY	ENGINE	TRANSMISSION
L = Dakota (All)	1 = Dakota 2WD	61 = Regular Cab (112 WB)	EPE = 2.5L 4 Cylinder	DGK = 4 Speed Automatic 42RE
	5 = Dakota 4WD	31 = Club Cab (131 WB)	EHC = 3.9L 6 Cylinder	DGT = 4 Speed Automatic 46RE
		84 = Quad Cab (131 WB)	EML = 5.0L 8 Cylinder	DDC = 5 Speed HD Manual
			EVA = 4.7L Magnum V8	DDK = 5 Speed HD Manual
			EP0 = All 2.5L	DG4 = Multispeed Automatic 45RFE
			EH0 = All 3.9L	DG0 = All Automatic Transmissions
			EM0 = All 5.9L	DBB = All Manual Transmissions
			EV0 = All 4.7L	

Plumbing, Heater And Air Conditioning, 2.5L Engine
Figure 24-210

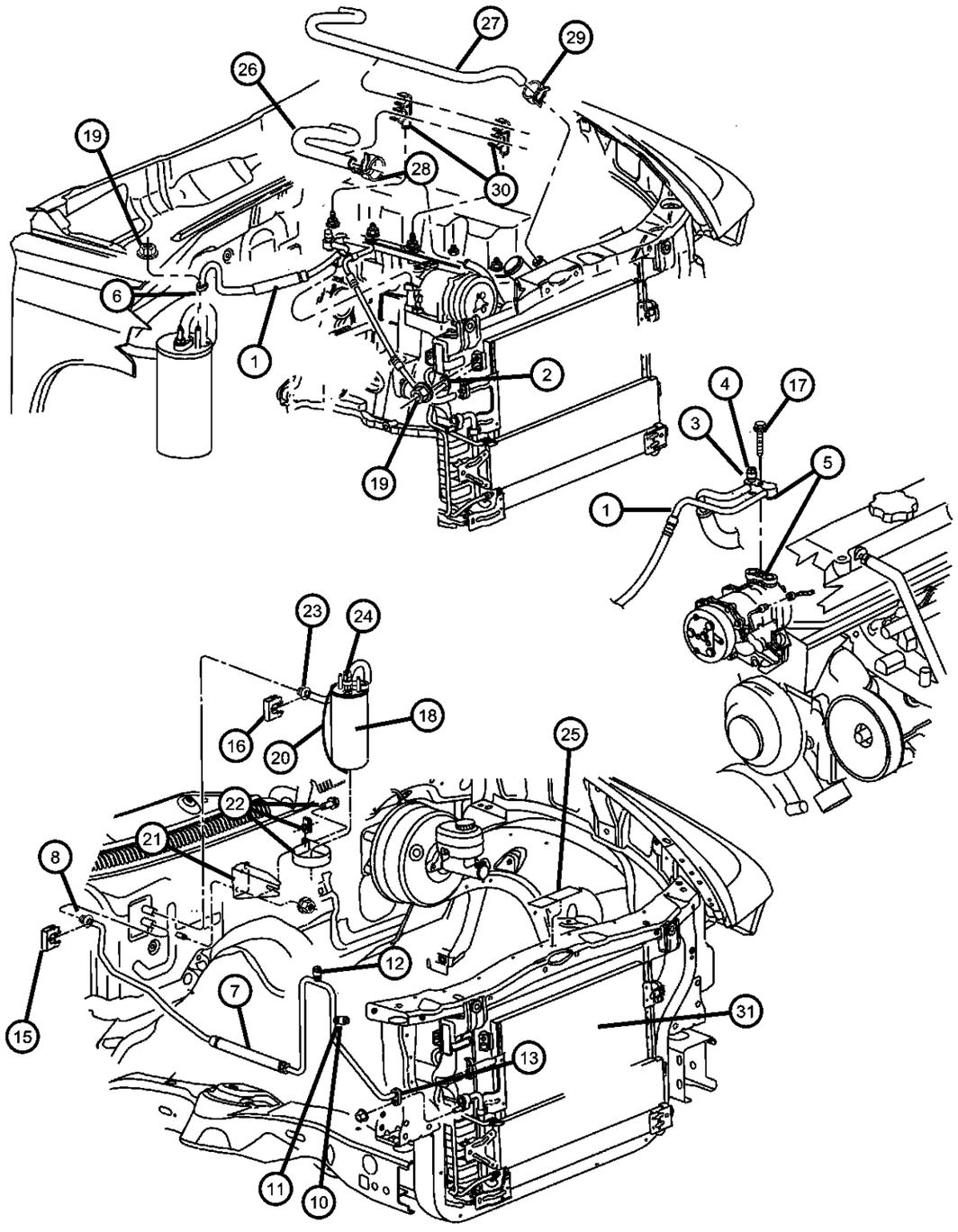

ITEM	PART NUMBER	QTY	LINE	SERIES	BODY	ENGINE	TRANS	TRIM	DESCRIPTION
Note: Sales Code EP0 = 2.5L Gas Engine									
1	55056082AC	1				EP0			LINE, A/C Suction & Discharge
2	04796666	1				EH0			O RING, A/C Discharge Line
3	05264642	1							CAP, A/C Check Valve
4	05264638	1							VALVE, Charging
5	04761737AC	1				EP0			O RING, A/C Suction Line
6	04796667	1				EH0			O RING, A/C Suction Line
7	55056410AB	1							LINE, A/C Suction & Discharge
8	04796293	1							O RING KIT, Quick Connect
-9	04883839AA	1							ORIFICE, Liquid Line
10	05264642	1							CAP, A/C Check Valve
11	05264638	1							VALVE, Charging
12	05003461AA	1							VALVE, A/C Discharge Line Check
13	04796666	1				EH0			O RING, A/C Discharge Line
-14									TRANSDUCER, Pressure Sensor
	04799758	1	1						
		1	5						
15	04596152	1							CLIP, A/C Quick Disconnect
16	04596153	1							CLIP, A/C Quick Disconnect
17	04596153	1							SCREW, Hex Flange Head, M8x1.25x35, (NOT SERVICED)
18	05093432AA	1							ACCUMULATOR, Suction Line
19	06100051	4							NUT AND WASHER, Hex Nut-Coned Washer, M8 x 1.25
20	05015880AA	1							STRAP, Ground
21	55055880AB	1							BRACKET, Accumulator
22	55036206AD	1							BAND, Accumulator Retaining
23	04796294	1							O RING KIT, Quick Connect
24	05015872AC	1							SWITCH, A/C Low Pressure Cut Off
25	55056130AB	1							LABEL, Air Conditioning System
26	55037628	1				EP0			HOSE, Heater Return
27	55037629	1				EP0			HOSE, Heater Supply
28	06502018	1				EP0			CLAMP, Hose, M28.9 x 1.60

DAKOTA (AN)

SERIES	LINE	BODY	ENGINE	TRANSMISSION
L = Dakota (All)	1 = Dakota 2WD	61 = Regular Cab (112 WB)	EPE = 2.5L 4 Cylinder	DGK = 4 Speed Automatic 42RE
	5 = Dakota 4WD	31 = Club Cab (131 WB)	EHC = 3.9L 6 Cylinder	DGT = 4 Speed Automatic 46RE
		84 = Quad Cab (131 WB)	EML = 5.0L 8 Cylinder	DDC = 5 Speed HD Manual
			EVA = 4.7L Magnum V8	DDK = 5 Speed HD Manual
			EP0 = All 2.5L	DG4 = Multispeed Automatic 45RFE
			EH0 = All 3.9L	DG0 = All Automatic Transmissions
			EM0 = All 5.9L	DBB = All Manual Transmissions
			EV0 = All 4.7L	

Plumbing, Heater And Air Conditioning, 2.5L Engine
Figure 24-210

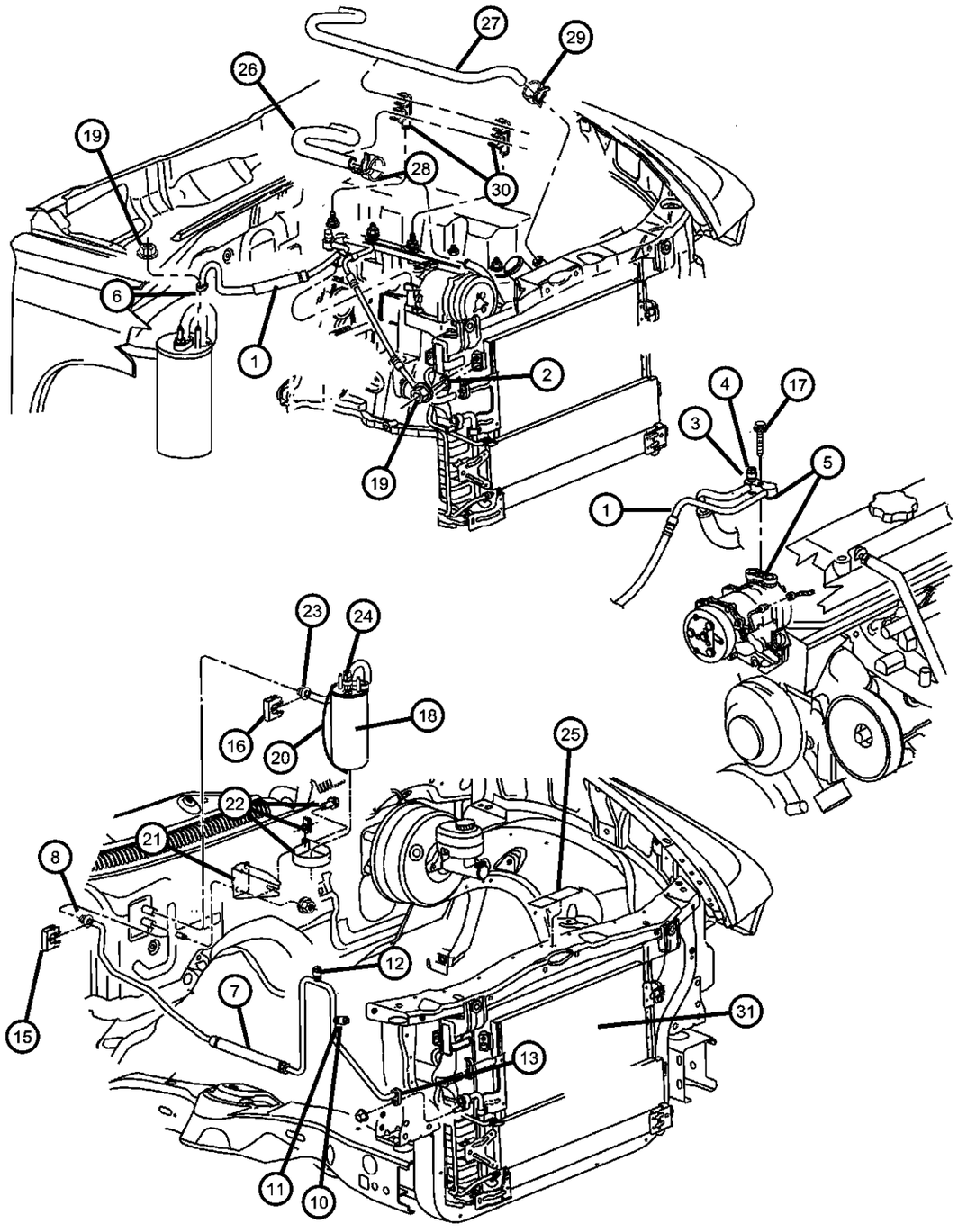

ITEM	PART NUMBER	QTY	LINE	SERIES	BODY	ENGINE	TRANS	TRIM	DESCRIPTION
29	06502017	3				EP0			CLAMP, Heater Hose
30	55035933	2	1		31, 61	EP0			BRACKET, Hose
31	55055866AC	1				EH0, EP0, EV0			CONDENSER, Air Conditioning
-32	05013320AA	1	1			EP0			O RING

DAKOTA (AN)

SERIES	LINE	BODY	ENGINE	TRANSMISSION
L = Dakota (All)	1 = Dakota 2WD	61 = Regular Cab (112 WB)	EPE = 2.5L 4 Cylinder	DGK = 4 Speed Automatic 42RE
	5 = Dakota 4WD	31 = Club Cab (131 WB)	EHC = 3.9L 6 Cylinder	DGT = 4 Speed Automatic 46RE
		84 = Quad Cab (131 WB)	EML = 5.0L 8 Cylinder	DDC = 5 Speed HD Manual
			EVA = 4.7L Magnum V8	DDK = 5 Speed HD Manual
			EP0 = All 2.5L	DG4 = Multispeed Automatic 45RFE
			EH0 = All 3.9L	DG0 = All Automatic Transmissions
			EM0 = All 5.9L	DBB = All Manual Transmissions
			EV0 = All 4.7L	

Plumbing, Heater And Air Conditioning, 3.9,5.9L Engine
Figure 24-220

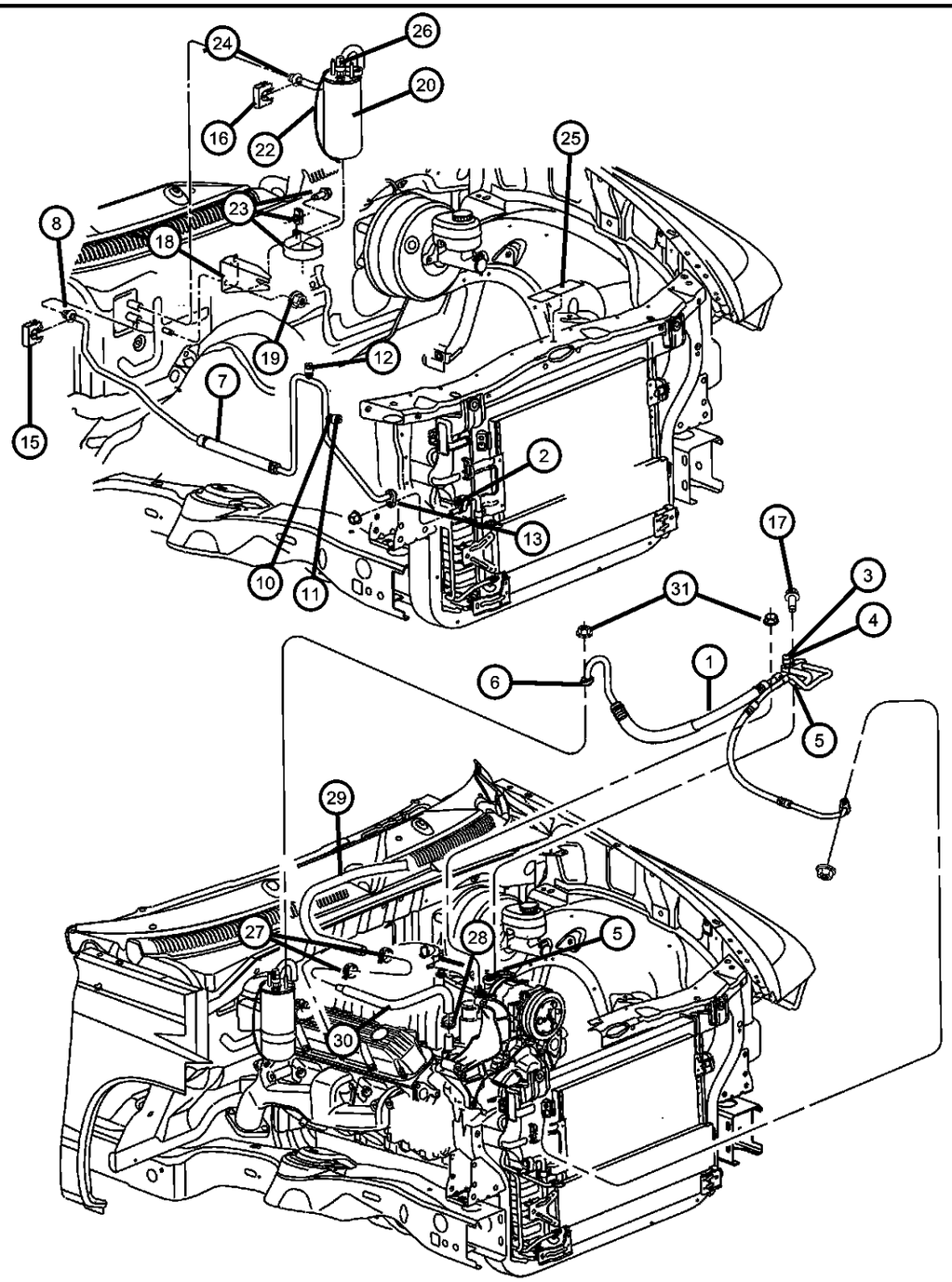

ITEM	PART NUMBER	QTY	LINE	SERIES	BODY	ENGINE	TRANS	TRIM	DESCRIPTION
1									LINE, A/C Suction & Discharge
	55056086AB	1				EH0			
	55056087AB	1				EM0			
2									O RING, A/C Discharge Line
	04796666	1				EM0			
		1				EH0			
3									CAP, A/C Check Valve
	05264642	1				EH0			
		1				EM0			
4	05264638	1							VALVE, Charging
5	04761737AB	1				EP0			O RING, A/C Suction Line
6									O RING, A/C Suction Line
	04796667	1				EM0			
		1				EH0			
7	55056410AC	1							LINE, A/C Liquid
8	04796293	1							O RING KIT, Quick Connect
-9	04883839AA	1							ORIFICE, Liquid Line
10									CAP, A/C Check Valve
	05264642	1				EH0			
		1				EM0			
11	05264638	1							VALVE, Charging
12	05003461AA	1							VALVE, A/C Discharge Line Check
13									O RING, A/C Discharge Line
	04796666	1				EM0			
		1				EH0			
-14									TRANSDUCER, Pressure Sensor
	04799758	1	1						
		1	5						
15	04596152	1							CLIP, A/C Quick Disconnect
16	04596153	1							CLIP, A/C Quick Disconnect
17	04596153	1							SCREW, Hex Flange Head, M8x1.25x35, (NOT SERVICED)
18	55055880AB	1							BRACKET, Accumulator

DAKOTA (AN)

SERIES	LINE	BODY	ENGINE	TRANSMISSION
L = Dakota (All)	1 = Dakota 2WD	61 = Regular Cab (112 WB)	EPE = 2.5L 4 Cylinder	DGK = 4 Speed Automatic 42RE
	5 = Dakota 4WD	31 = Club Cab (131 WB)	EHC = 3.9L 6 Cylinder	DGT = 4 Speed Automatic 46RE
		84 = Quad Cab (131 WB)	EML = 5.0L 8 Cylinder	DDC = 5 Speed HD Manual
			EVA = 4.7L Magnum V8	DDK = 5 Speed HD Manual
			EP0 = All 2.5L	DG4 = Multispeed Automatic 45RFE
			EH0 = All 3.9L	DG0 = All Automatic Transmissions
			EM0 = All 5.9L	DBB = All Manual Transmissions
			EV0 = All 4.7L	

AR = use ase required - = Non illustrrated part

Plumbing, Heater And Air Conditioning, 3.9,5.9L Engine
Figure 24-220

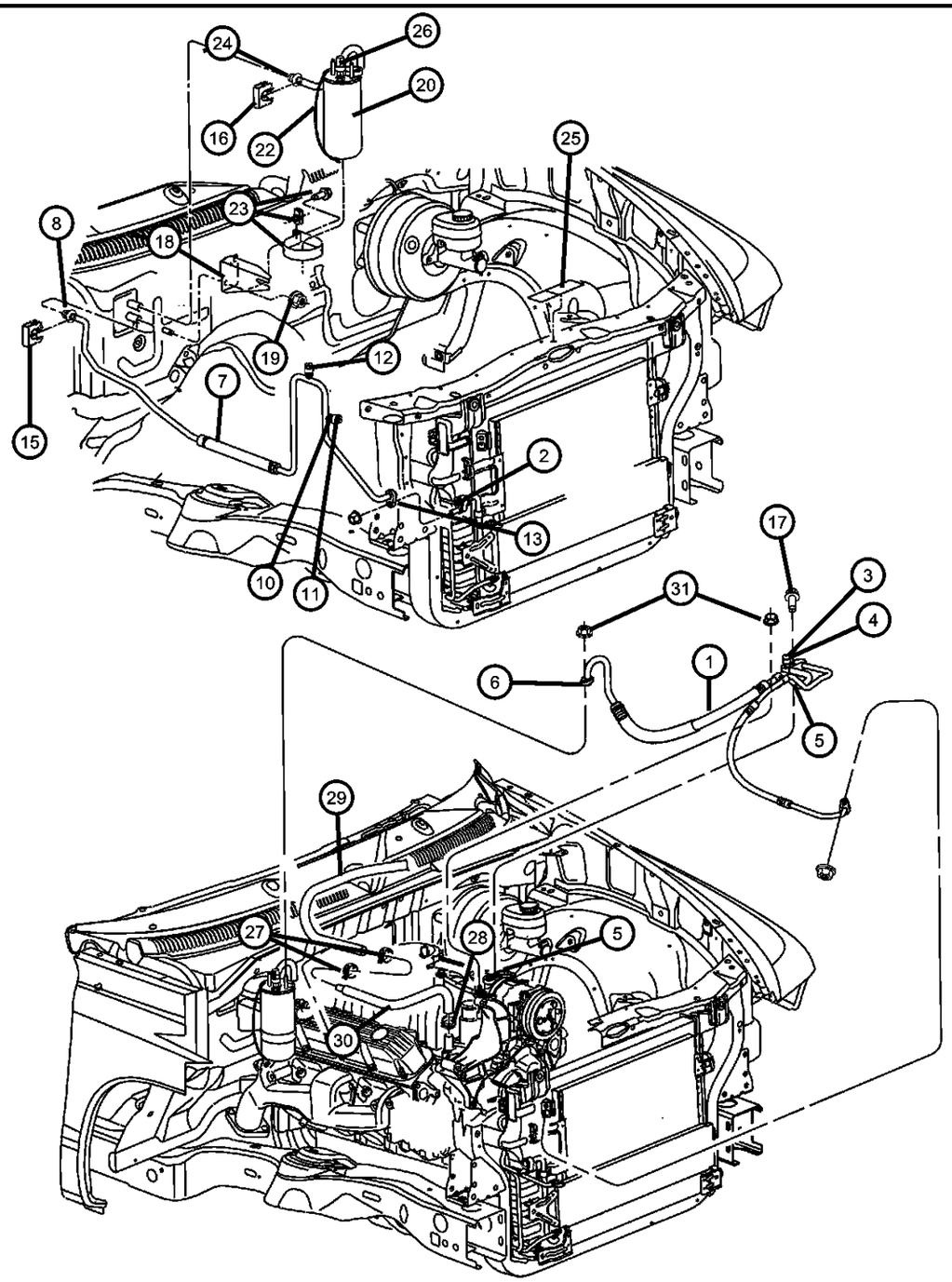

ITEM	PART NUMBER	QTY	LINE	SERIES	BODY	ENGINE	TRANS	TRIM	DESCRIPTION
19	06100051	4							NUT AND WASHER, Hex Nut-Coned Washer, M8 x 1.25
20	05093432AA	1							ACCUMULATOR, Suction Line
-21	05015883AA	1							TUBE, Accumulator Inlet
22	05015880AA	1							STRAP, Ground
23	55036206AD	1							BAND, Accumulator Retaining
24	04796294	2							O RING KIT, Quick Connect
25	55056130AB	1							LABEL, Air Conditioning System
26	04897612AB	1							SWITCH, A/C Low Pressure Cut Off
27	06502017	5				EH0, EM0			CLAMP, Heater Hose
28	06502018	1				EP0			CLAMP, Hose, M28.9 x 1.60
29									HOSE, Heater Supply
	55037130AC	1				EH0			
	55057222AC	1				EM0			
30	55036413AB	1				EH0, EM0			HOSE, Heater
31	06101445	3							NUT AND WASHER, Hex Nut-Coned Washer, M8 x 1.25
-32	55055866AA	1				EH0, EM0, EV0			CONDENSER, Air Conditioning

DAKOTA (AN)

SERIES	LINE	BODY	ENGINE	TRANSMISSION
L = Dakota (All)	1 = Dakota 2WD	61 = Regular Cab (112 WB)	EPE = 2.5L 4 Cylinder	DGK = 4 Speed Automatic 42RE
	5 = Dakota 4WD	31 = Club Cab (131 WB)	EHC = 3.9L 6 Cylinder	DGT = 4 Speed Automatic 46RE
		84 = Quad Cab (131 WB)	EML = 5.0L 8 Cylinder	DDC = 5 Speed HD Manual
			EVA = 4.7L Magnum V8	DDK = 5 Speed HD Manual
			EP0 = All 2.5L	DG4 = Multispeed Automatic 45RFE
			EH0 = All 3.9L	DG0 = All Automatic Transmissions
			EM0 = All 5.9L	DBB = All Manual Transmissions
			EV0 = All 4.7L	

AR = use ase required - = Non illustrrated part

Plumbing, Heater And Air Conditioning, 4.7L Engine
Figure 24-230

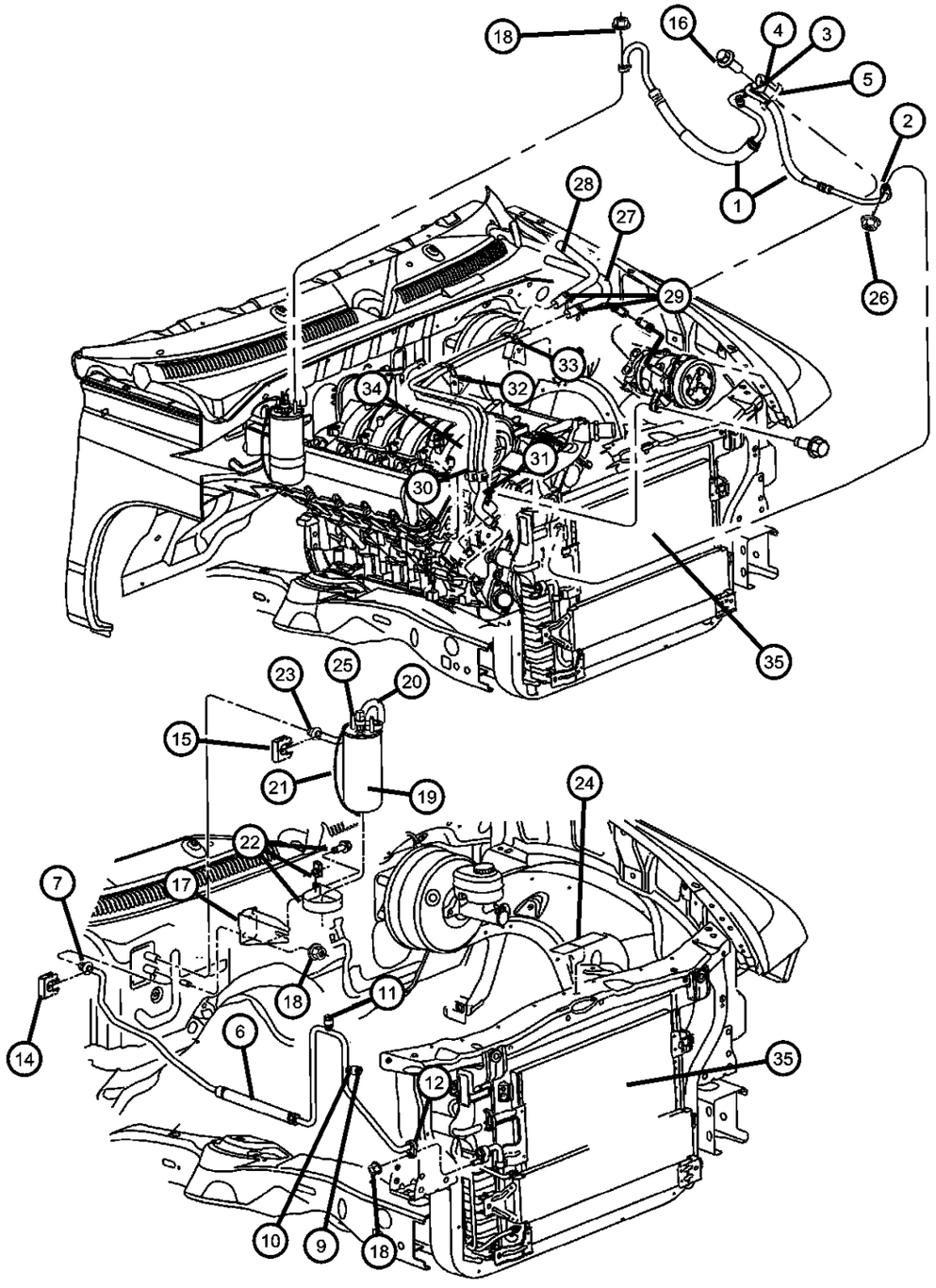

ITEM	PART NUMBER	QTY	LINE	SERIES	BODY	ENGINE	TRANS	TRIM	DESCRIPTION
1	55056088AB	1				EV0			LINE, A/C Suction & Discharge
2	04796666	1				EM0			O RING, A/C Discharge Line
3	05264642	1							CAP, A/C Check Valve
4	05264638	1							VALVE, Charging
5									SEAL
	04740401	1							
	05072860AA	1				EV0			
6	55056410AB	1							LINE, A/C Suction & Discharge
7	04796293	1							O RING KIT, Quick Connect
-8	04883839AA	1							ORIFICE, Liquid Line
9	05264642	1				EV0			CAP, A/C Check Valve
10	05264638	1							VALVE, Charging
11	05003461AA	1							VALVE, A/C Discharge Line Check
12	04796666	1				EM0			O RING, A/C Discharge Line
-13	05072384AA	1							TRANSDUCER, Pressure Sensor
14	04596152	1							CLIP, A/C Quick Disconnect
15	04596153	1							CLIP, A/C Quick Disconnect
16	04596153	1							SCREW, Hex Flange Head, M8x1.25x35, (NOT SERVICED)
17	55055880AB	1							BRACKET, Accumulator
18	06101445	3							NUT AND WASHER, Hex Nut-Coned Washer, M8 x 1.25
19	05093432AA	1							ACCUMULATOR, Suction Line
20	05015883AA	1							TUBE, Accumulator Inlet
21	04469228	1				EV0			STRAP, Ground
22	55036206AD	1							BAND, Accumulator Retaining
23	04796294	2							O RING KIT, Quick Connect
24	55056130AA	1							LABEL, Air Conditioning System
25	04897612AB	1							SWITCH, A/C Low Pressure Cut Off
26	06101445	3							NUT AND WASHER, Hex Nut-Coned Washer, M8 x 1.25
27	55056043AB	1				EV0			HOSE, Heater Supply
28	55056044AB	1				EV0			HOSE, Heater Return
29	06502017	1				EV0			CLAMP, Heater Hose

DAKOTA (AN)

SERIES	LINE	BODY	ENGINE	TRANSMISSION
L = Dakota (All)	1 = Dakota 2WD 5 = Dakota 4WD	61 = Regular Cab (112 WB) 31 = Club Cab (131 WB) 84 = Quad Cab (131 WB)	EPE = 2.5L 4 Cylinder EHC = 3.9L 6 Cylinder EML = 5.0L 8 Cylinder EVA = 4.7L Magnum V8 EP0 = All 2.5L EH0 = All 3.9L EM0 = All 5.9L EV0 = All 4.7L	DGK = 4 Speed Automatic 42RE DGT = 4 Speed Automatic 46RE DDC = 5 Speed HD Manual DDK = 5 Speed HD Manual DG4 = Multispeed Automatic 45RFE DG0 = All Automatic Transmissions DBB = All Manual Transmissions

AR = use ase required - = Non illustrrated part

Plumbing, Heater And Air Conditioning, 4.7L Engine
Figure 24-230

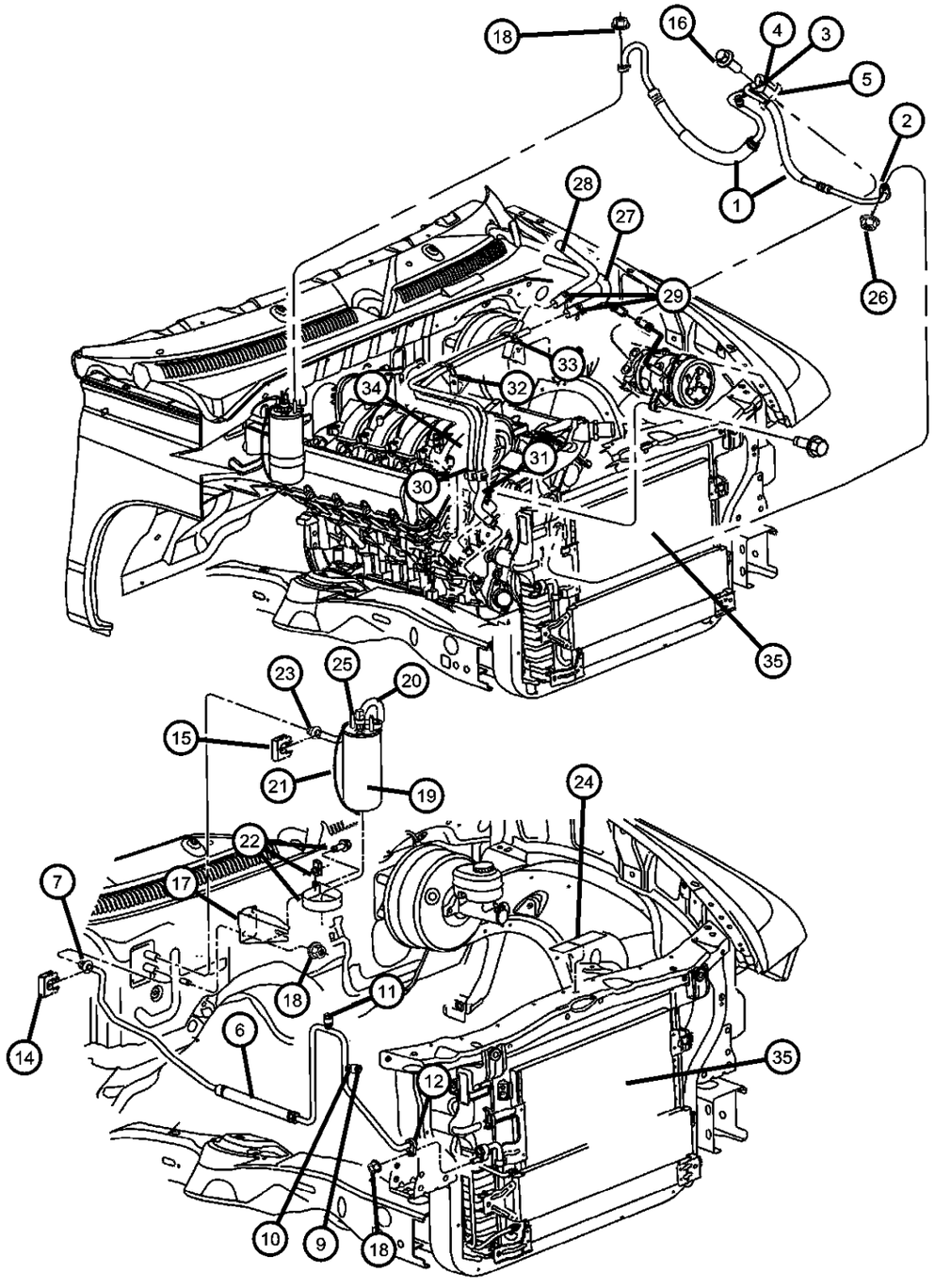

ITEM	PART NUMBER	QTY	LINE	SERIES	BODY	ENGINE	TRANS	TRIM	DESCRIPTION
30	05015543AC	1				EV0			TUBE AND HOSE, Supply
31	05015544AC	1				EV0			TUBE AND HOSE, Return
32	05015518AA	1				EV0			BRACKET, Hose
33	05015519AB	1				EV0			BRACKET, Hose
34	05013603AA	1				EV0			CLIP, Eng.
35	55055866AA	1				EM0, EV0			CONDENSER, Air Conditioning

DAKOTA (AN)

SERIES	LINE	BODY	ENGINE	TRANSMISSION
L = Dakota (All)	1 = Dakota 2WD	61 = Regular Cab (112 WB)	EPE = 2.5L 4 Cylinder	DGK = 4 Speed Automatic 42RE
	5 = Dakota 4WD	31 = Club Cab (131 WB)	EHC = 3.9L 6 Cylinder	DGT = 4 Speed Automatic 46RE
		84 = Quad Cab (131 WB)	EML = 5.0L 8 Cylinder	DDC = 5 Speed HD Manual
			EVA = 4.7L Magnum V8	DDK = 5 Speed HD Manual
			EP0 = All 2.5L	DG4 = Multispeed Automatic 45RFE
			EH0 = All 3.9L	DG0 = All Automatic Transmissions
			EM0 = All 5.9L	DBB = All Manual Transmissions
			EV0 = All 4.7L	

Control, Heater
Figure 24-305

ITEM	PART NUMBER	QTY	LINE	SERIES	BODY	ENGINE	TRANS	TRIM	DESCRIPTION
1									CONTROL, Heater
	55055906AE	1							With Rear Defrost [GFA]
	55056409AD	1							Without Rear Defrost [GFA]
2	05011272AA	3							KNOB, A/C And Heater Control - Rotary

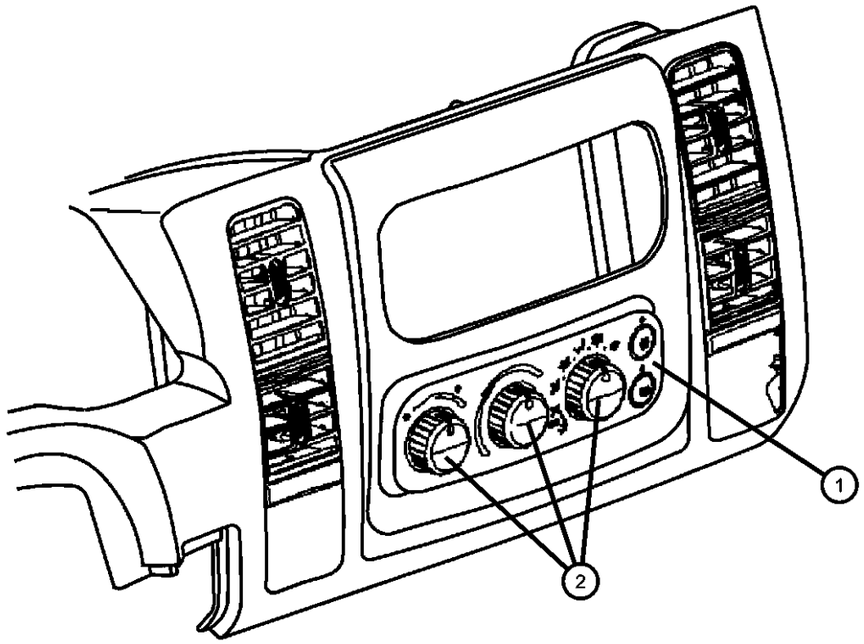

DAKOTA (AN)

SERIES	LINE	BODY	ENGINE	TRANSMISSION
L = Dakota (All)	1 = Dakota 2WD	61 = Regular Cab (112 WB)	EPE = 2.5L 4 Cylinder	DGK = 4 Speed Automatic 42RE
	5 = Dakota 4WD	31 = Club Cab (131 WB)	EHC = 3.9L 6 Cylinder	DGT = 4 Speed Automatic 46RE
		84 = Quad Cab (131 WB)	EML = 5.0L 8 Cylinder	DDC = 5 Speed HD Manual
			EVA = 4.7L Magnum V8	DDK = 5 Speed HD Manual
			EP0 = All 2.5L	DG4 = Multispeed Automatic 45RFE
			EH0 = All 3.9L	DG0 = All Automatic Transmissions
			EM0 = All 5.9L	DBB = All Manual Transmissions
			EV0 = All 4.7L	

Control, Air Conditioning
Figure 24-310

ITEM	PART NUMBER	QTY	LINE	SERIES	BODY	ENGINE	TRANS	TRIM	DESCRIPTION
1									CONTROL, Air Conditioning
	55056246AA	1							[+GFA or GTS]
	55056247AA	1							[-GFA or GTS]
2	05011272AA	3							KNOB, A/C And Heater Control - Rotary

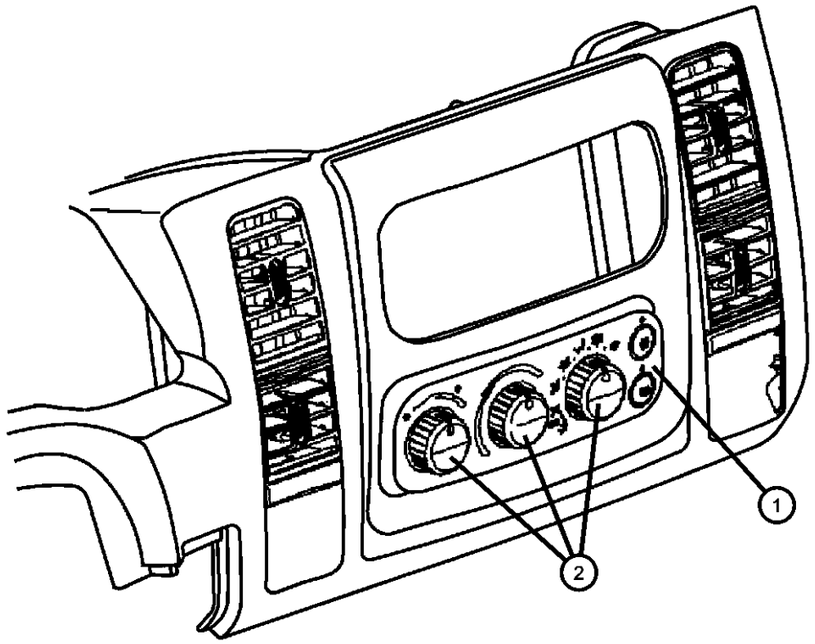

DAKOTA (AN)

SERIES	LINE	BODY	ENGINE	TRANSMISSION
L = Dakota (All)	1 = Dakota 2WD	61 = Regular Cab (112 WB)	EPE = 2.5L 4 Cylinder	DGK = 4 Speed Automatic 42RE
	5 = Dakota 4WD	31 = Club Cab (131 WB)	EHC = 3.9L 6 Cylinder	DGT = 4 Speed Automatic 46RE
		84 = Quad Cab (131 WB)	EML = 5.0L 8 Cylinder	DDC = 5 Speed HD Manual
			EVA = 4.7L Magnum V8	DDK = 5 Speed HD Manual
			EP0 = All 2.5L	DG4 = Multispeed Automatic 45RFE
			EH0 = All 3.9L	DG0 = All Automatic Transmissions
			EM0 = All 5.9L	DBB = All Manual Transmissions
			EV0 = All 4.7L	

Compressor, Air Conditioning
Figure 24-405

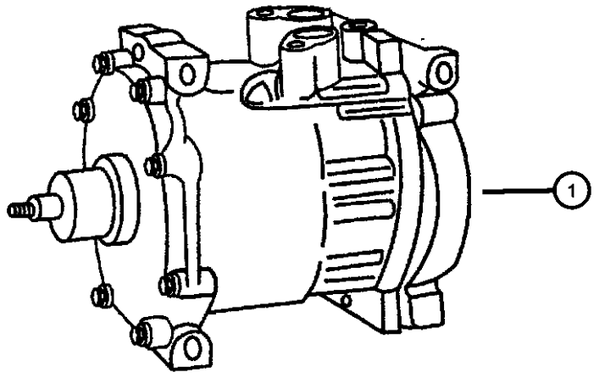

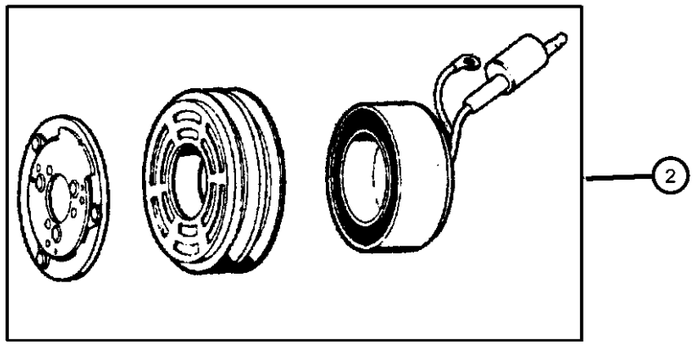

ITEM	PART NUMBER	QTY	LINE	SERIES	BODY	ENGINE	TRANS	TRIM	DESCRIPTION
Note: Sales Code EP0 = 2.5L Gas Engine									
Note: Sales Code EH0 = 3.9L Gas Engine									
Note: Sales Code EL0 = 5.2L Gas Engine									
Note: Sales Code EM0 = 5.9L Gas Engine									
1									COMPRESSOR, Air Conditioning
	55056094AB	1				EH0, EM0			
	55056108AE	1				EP0			
	55057334AA	1				EV0			
2									CLUTCH, A/C Compressor
	05015314AA	1				EP0			
	05072658AA	1				EH0, EM0			
	05083077AA	1				EV0			

DAKOTA (AN)

SERIES	LINE	BODY	ENGINE	TRANSMISSION
L = Dakota (All)	1 = Dakota 2WD	61 = Regular Cab (112 WB)	EPE = 2.5L 4 Cylinder	DGK = 4 Speed Automatic 42RE
	5 = Dakota 4WD	31 = Club Cab (131 WB)	EHC = 3.9L 6 Cylinder	DGT = 4 Speed Automatic 46RE
		84 = Quad Cab (131 WB)	EML = 5.0L 8 Cylinder	DDC = 5 Speed HD Manual
			EVA = 4.7L Magnum V8	DDK = 5 Speed HD Manual
			EP0 = All 2.5L	DG4 = Multispeed Automatic 45RFE
			EH0 = All 3.9L	DG0 = All Automatic Transmissions
			EM0 = All 5.9L	DBB = All Manual Transmissions
			EV0 = All 4.7L	

Mounting, Compressor 2.5L Engine
Figure 24-505

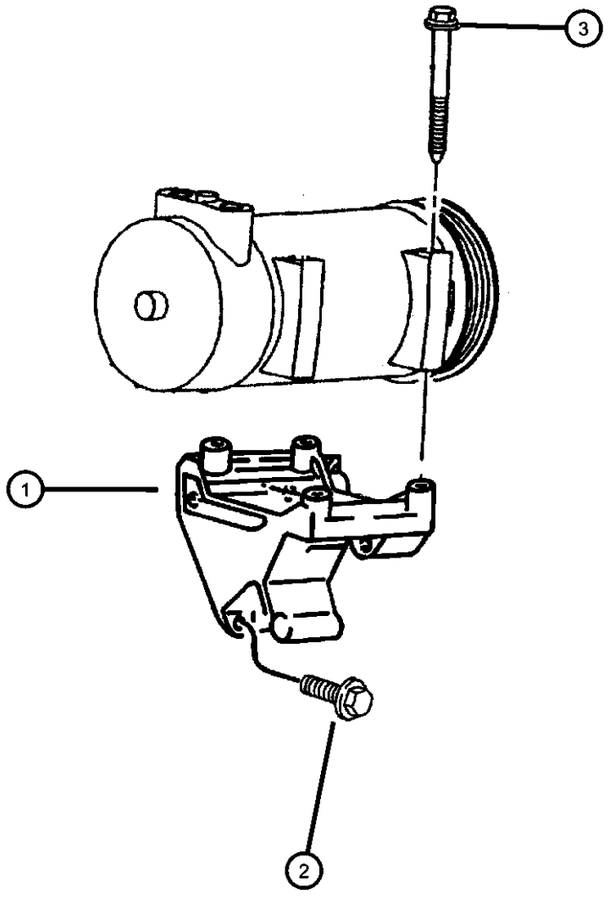

ITEM	PART NUMBER	QTY	LINE	SERIES	BODY	ENGINE	TRANS	TRIM	DESCRIPTION
Note: Sales Code EP0 = 2.5L Gas Engine									
1	53010207	1				EP0			BRACKET, Alternator And Compressor
2	06025063	3				EP0			SCREW AND WASHER, .375-16x1.125
3	06025063	3							BOLT, M8x1.25x90, (NOT SERVICED)

DAKOTA (AN)

SERIES	LINE	BODY	ENGINE	TRANSMISSION
L = Dakota (All)	1 = Dakota 2WD	61 = Regular Cab (112 WB)	EPE = 2.5L 4 Cylinder	DGK = 4 Speed Automatic 42RE
	5 = Dakota 4WD	31 = Club Cab (131 WB)	EHC = 3.9L 6 Cylinder	DGT = 4 Speed Automatic 46RE
		84 = Quad Cab (131 WB)	EML = 5.0L 8 Cylinder	DDC = 5 Speed HD Manual
			EVA = 4.7L Magnum V8	DDK = 5 Speed HD Manual
			EP0 = All 2.5L	DG4 = Multispeed Automatic 45RFE
			EH0 = All 3.9L	DG0 = All Automatic Transmissions
			EM0 = All 5.9L	DBB = All Manual Transmissions
			EV0 = All 4.7L	

Mounting, Compressor 3.9L, 5.9L Engine
Figure 24-507

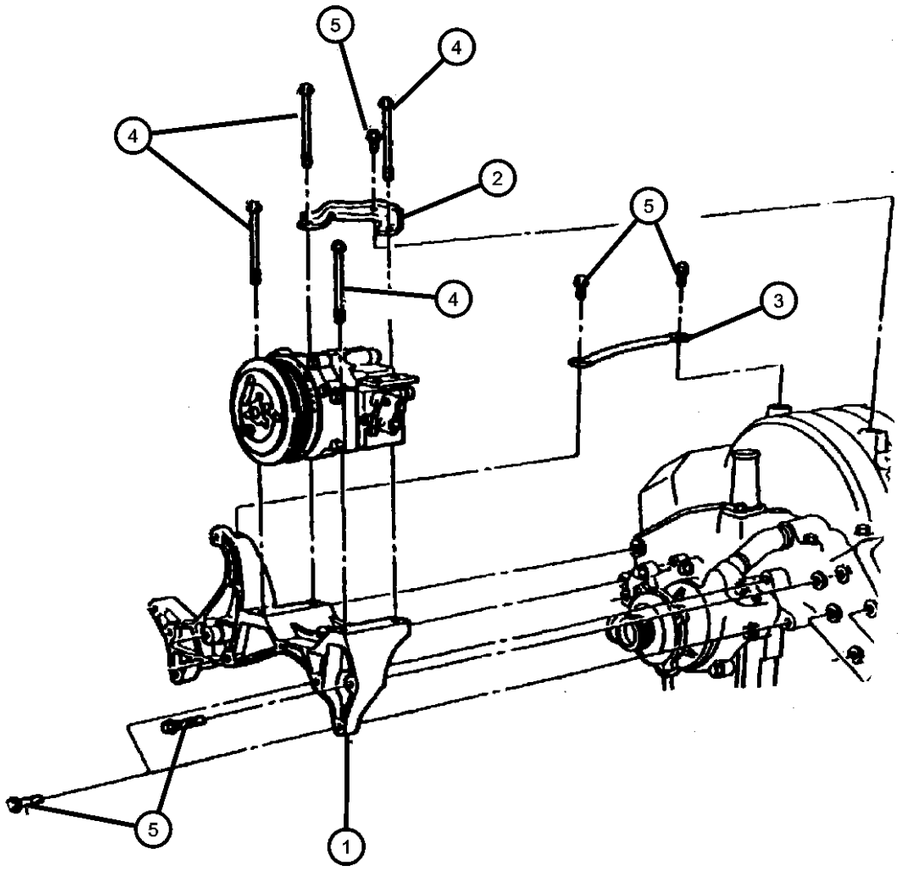

ITEM	PART NUMBER	QTY	LINE	SERIES	BODY	ENGINE	TRANS	TRIM	DESCRIPTION
Note: Sales Code EH0 = 3.9L Gas Engine Note: Sales Code EM0 = 5.9L Gas Engine									
1	53008614	1				EH0, EM0			BRACKET, Alternator And Compressor
2	53010252	1				EH0, EM0			BRACE, A/C Compressor
3	53008746	1				EH0, EM0			BRACE, Alternator
4	06034789	4				EH0, EM0			SCREW AND WASHER, Hex Head Coned Lock Washe, .312-18x3.75
5	06034789	4							BOLT, (NOT SERVICED)

DAKOTA (AN)

SERIES	LINE	BODY	ENGINE	TRANSMISSION
L = Dakota (All)	1 = Dakota 2WD 5 = Dakota 4WD	61 = Regular Cab (112 WB) 31 = Club Cab (131 WB) 84 = Quad Cab (131 WB)	EPE = 2.5L 4 Cylinder EHC = 3.9L 6 Cylinder EML = 5.0L 8 Cylinder EVA = 4.7L Magnum V8 EP0 = All 2.5L EH0 = All 3.9L EM0 = All 5.9L EV0 = All 4.7L	DGK = 4 Speed Automatic 42RE DGT = 4 Speed Automatic 46RE DDC = 5 Speed HD Manual DDK = 5 Speed HD Manual DG4 = Multispeed Automatic 45RFE DG0 = All Automatic Transmissions DBB = All Manual Transmissions

Compressor, Air Conditioning 4.7L Engine
Figure 24-510

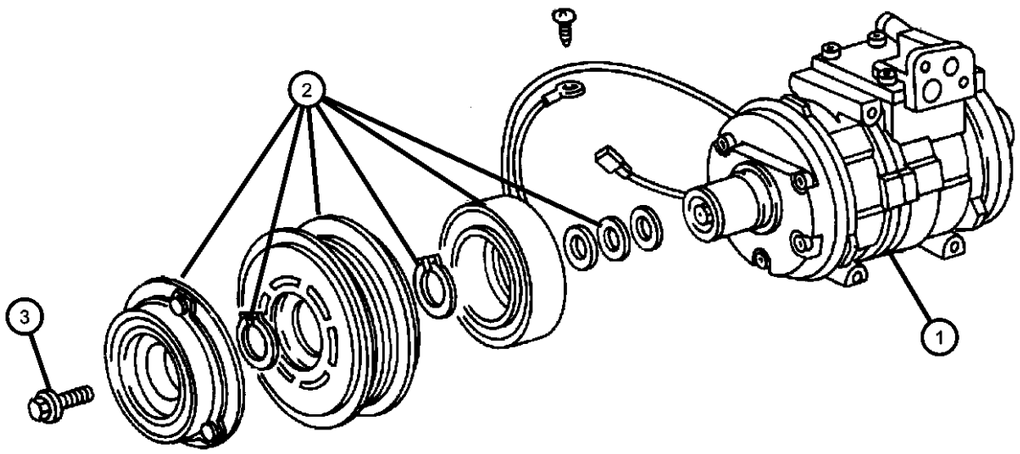

ITEM	PART NUMBER	QTY	LINE	SERIES	BODY	ENGINE	TRANS	TRIM	DESCRIPTION
1	55057334AA	1				EV0			COMPRESSOR, Air Conditioning
2	05083077AA	1				EV0			CLUTCH, A/C Compressor
3	05083077AA	1							SCREW, (NOT SERVICED)

DAKOTA (AN)

SERIES	LINE	BODY	ENGINE	TRANSMISSION
L = Dakota (All)	1 = Dakota 2WD	61 = Regular Cab (112 WB)	EPE = 2.5L 4 Cylinder	DGK = 4 Speed Automatic 42RE
	5 = Dakota 4WD	31 = Club Cab (131 WB)	EHC = 3.9L 6 Cylinder	DGT = 4 Speed Automatic 46RE
		84 = Quad Cab (131 WB)	EML = 5.0L 8 Cylinder	DDC = 5 Speed HD Manual
			EVA = 4.7L Magnum V8	DDK = 5 Speed HD Manual
			EP0 = All 2.5L	DG4 = Multispeed Automatic 45RFE
			EH0 = All 3.9L	DG0 = All Automatic Transmissions
			EM0 = All 5.9L	DBB = All Manual Transmissions
			EV0 = All 4.7L	

Mounting, Compressor 4.7L Engine
Figure 24-520

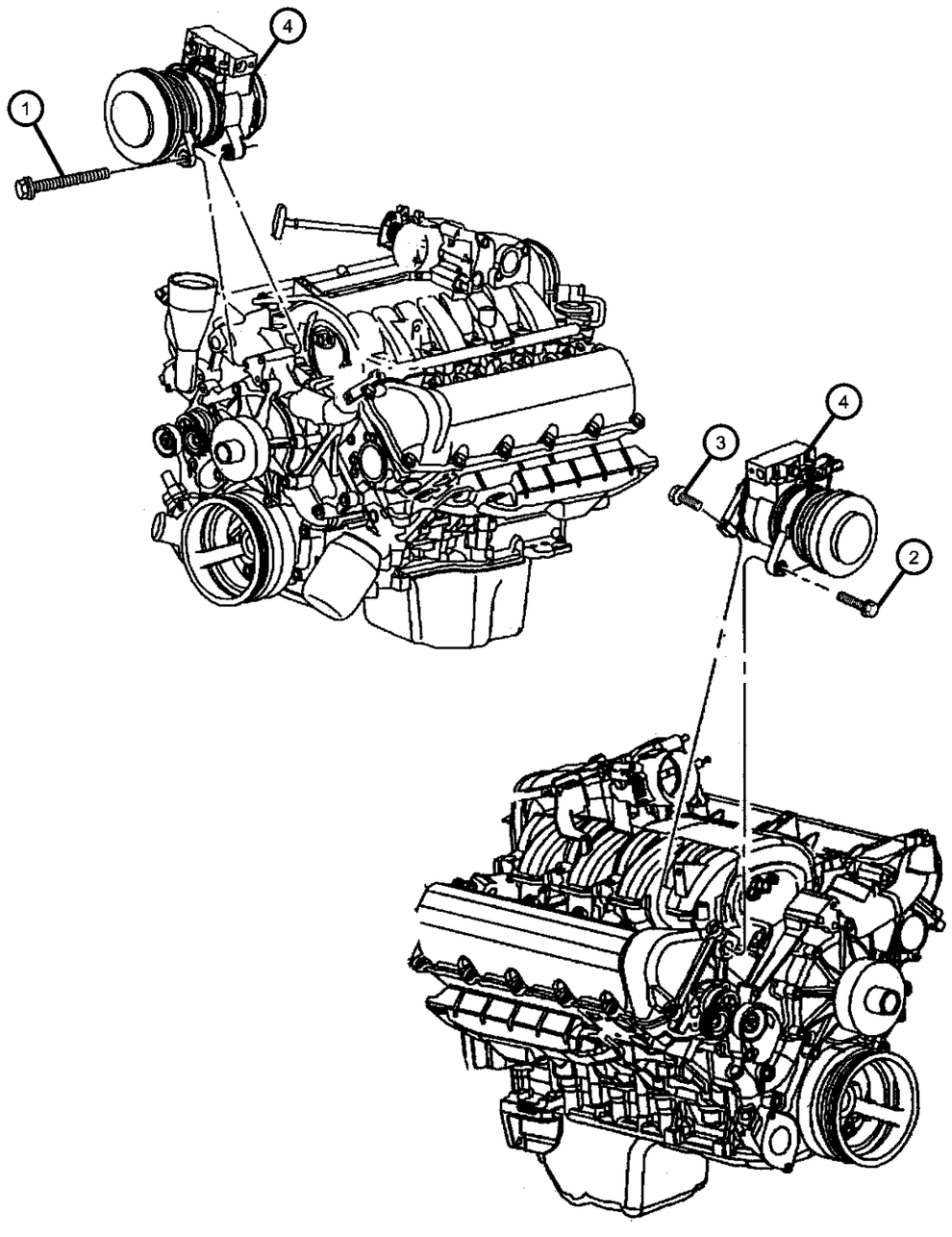

ITEM	PART NUMBER	QTY	LINE	SERIES	BODY	ENGINE	TRANS	TRIM	DESCRIPTION
Note: Sales Code EV0 = 4.7 L Engine									
1	06504344	1				EV0			SCREW AND WASHER, Hex Head
2	06101985	5				EV0			SCREW AND WASHER, M10x1.50x45.00
3	06102047AA	6				EV0			SCREW, Hex Head, M8x1.25x50
4	55057334AA	1				EV0			COMPRESSOR, Air Conditioning
-5	05073217AA	1				EV0			BRACKET, A/C Line

DAKOTA (AN)

SERIES	LINE	BODY	ENGINE	TRANSMISSION
L = Dakota (All)	1 = Dakota 2WD	61 = Regular Cab (112 WB)	EPE = 2.5L 4 Cylinder	DGK = 4 Speed Automatic 42RE
	5 = Dakota 4WD	31 = Club Cab (131 WB)	EHC = 3.9L 6 Cylinder	DGT = 4 Speed Automatic 46RE
		84 = Quad Cab (131 WB)	EML = 5.0L 8 Cylinder	DDC = 5 Speed HD Manual
			EVA = 4.7L Magnum V8	DDK = 5 Speed HD Manual
			EP0 = All 2.5L	DG4 = Multispeed Automatic 45RFE
			EH0 = All 3.9L	DG0 = All Automatic Transmissions
			EM0 = All 5.9L	DBB = All Manual Transmissions
			EV0 = All 4.7L	

Air Ducts
Figure 24-605

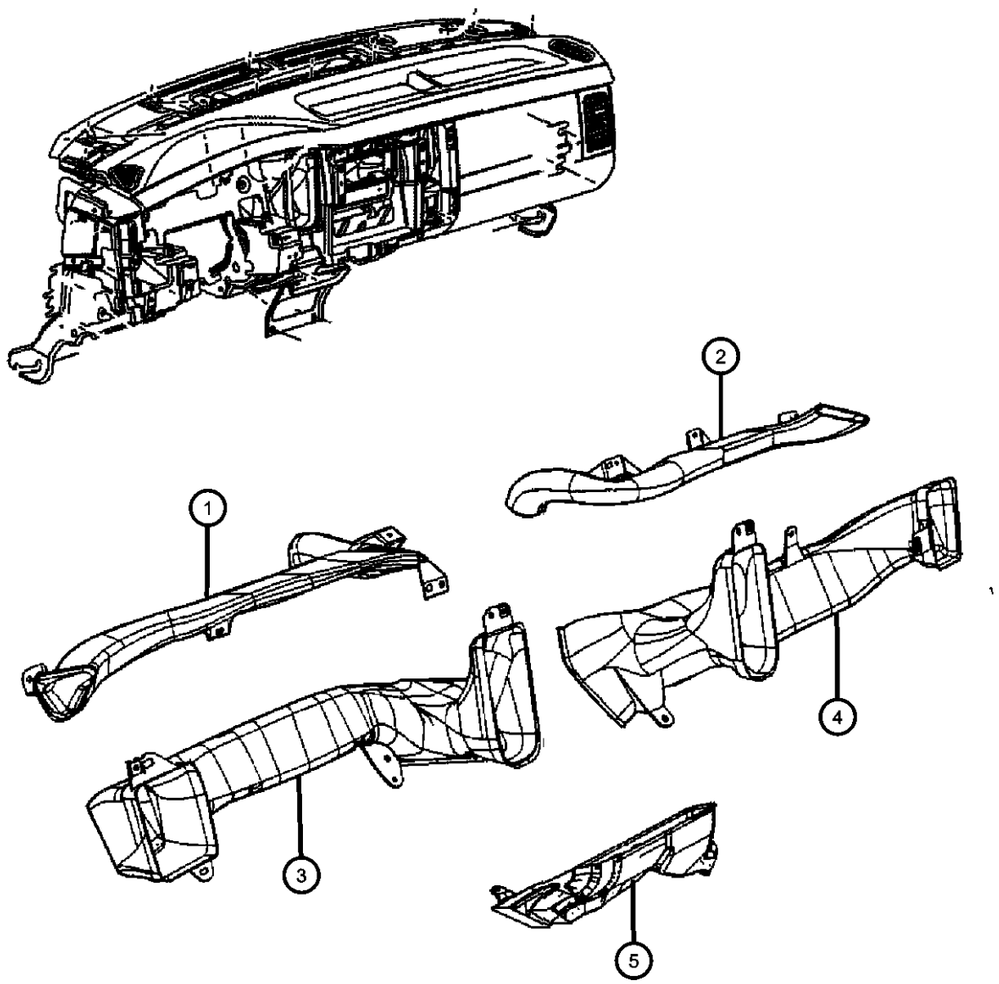

ITEM	PART NUMBER	QTY	LINE	SERIES	BODY	ENGINE	TRANS	TRIM	DESCRIPTION
1	05019387AA	1							DUCT, DemisterLeft
2	05019388AA	1							DUCT, DemisterRight
3	05019391AA	1							DUCT, Heater And A/CLeft
4	05019389AA	1							DUCT, Heater And A/CRight
5	05061250AA	1							DUCT, Floor

DAKOTA (AN)

SERIES	LINE	BODY	ENGINE	TRANSMISSION
L = Dakota (All)	1 = Dakota 2WD	61 = Regular Cab (112 WB)	EPE = 2.5L 4 Cylinder	DGK = 4 Speed Automatic 42RE
	5 = Dakota 4WD	31 = Club Cab (131 WB)	EHC = 3.9L 6 Cylinder	DGT = 4 Speed Automatic 46RE
		84 = Quad Cab (131 WB)	EML = 5.0L 8 Cylinder	DDC = 5 Speed HD Manual
			EVA = 4.7L Magnum V8	DDK = 5 Speed HD Manual
			EP0 = All 2.5L	DG4 = Multispeed Automatic 45RFE
			EH0 = All 3.9L	DG0 = All Automatic Transmissions
			EM0 = All 5.9L	DBB = All Manual Transmissions
			EV0 = All 4.7L	

Group - 25

Emission Systems

025-100
Emission Labels

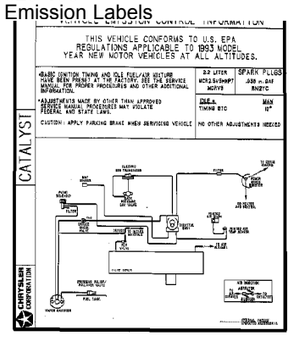

025-300
Vacuum Canister

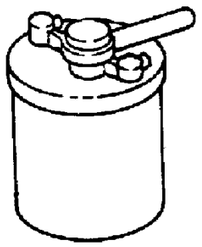

025-400
Emission Harness

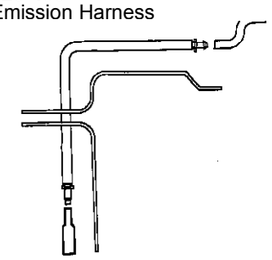

Group - 25 Emission Systems

Illustration Title — Group-Fig. No.

Emission Labels
Emission Labels ..... Fig. 25 - 110

Vacuum Canister
Vacuum Canister, 2.5 [EPE], 3.9 [EHC], 4.7 [EVA], 5.9 [EML] ..... Fig. 25 - 310

Emission Harness
Emission Control Vacuum Harness, 2.5L [EPE] ..... Fig. 25 - 410
Emission Control Vacuum Harness, 3.9L [EHC], 4.7L [EVA], 5.9L [EML] ..... Fig. 25 - 420
Leak Detection Pump, All Engines ..... Fig. 25 - 430

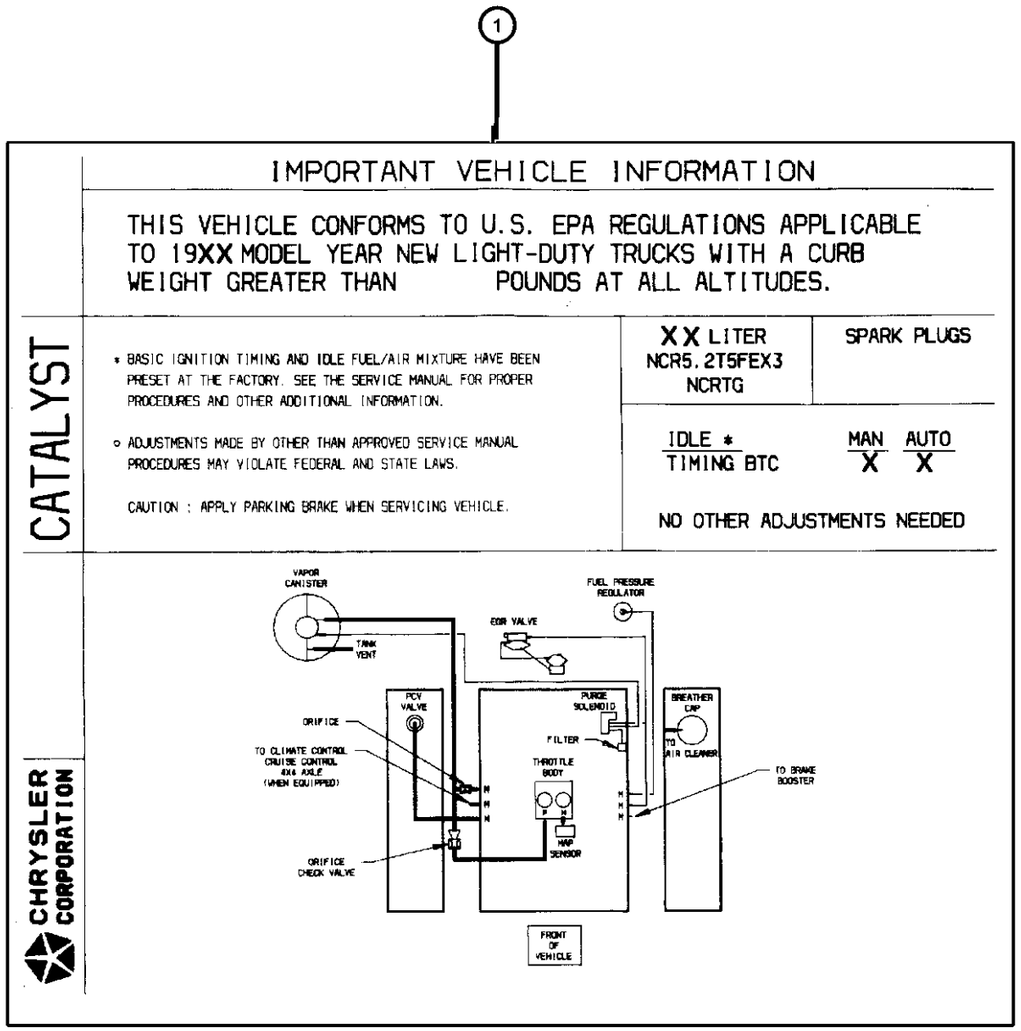

ITEM	PART NUMBER	QTY	LINE	SERIES	BODY	ENGINE	TRANS	TRIM	DESCRIPTION

Note; Sales Codes
[EH0]= All 3.9L V-6 Gas Engines
[EML]= Magnum 5.9L V-8 Gas Engines
[EP0]= All 2.5L, 4 Cylinder Gas Engines
[EVA]= Next Generation 4.7L Magnum V-8 Engine
[EV0]= All 4.7L V-8 Gas Engines

1									LABEL, Emission
	52113755AA	1	1		31, 61	EP0			U.S. 50 States
	52113756AA	1			31, 61	EH0			U.S. 50 States
	52113758AA	1			84	EH0			Federal
	52113760AA	1	1		31, 61	EVA			U.S. 50 States
	52113762AA	1	5		31, 61	EVA			U.S. 50 States
	52113764AA	1	1		84	EVA			Federal
	52113774AA	1	5		84	EVA			U.S. 50 States
	52113776AA	1	1		31, 61	EML			U.S. 50 States
	52113780AA	1	1		84	EML			Federal
	52113782AA	1	5		84	EML			Federal
	52113786AA	1			84	EH0			California
	52113787AA	1			84	EVA			California
	52113789AA	1			84	EML			California
	52113790AA	1				EP0			Export

DAKOTA (AN)

SERIES	LINE	BODY	ENGINE	TRANSMISSION
L = Dakota (All)	1 = Dakota 2WD	61 = Regular Cab (112 WB)	EPE = 2.5L 4 Cylinder	DGK = 4 Speed Automatic 42RE
	5 = Dakota 4WD	31 = Club Cab (131 WB)	EHC = 3.9L 6 Cylinder	DGT = 4 Speed Automatic 46RE
		84 = Quad Cab (131 WB)	EML = 5.0L 8 Cylinder	DDC = 5 Speed HD Manual
			EVA = 4.7L Magnum V8	DDK = 5 Speed HD Manual
			EP0 = All 2.5L	DG4 = Multispeed Automatic 45RFE
			EH0 = All 3.9L	DG0 = All Automatic Transmissions
			EM0 = All 5.9L	DBB = All Manual Transmissions
			EV0 = All 4.7L	

Vacuum Canister, 2.5 [EPE], 3.9 [EHC], 4.7 [EVA], 5.9 [EML]
Figure 25-310

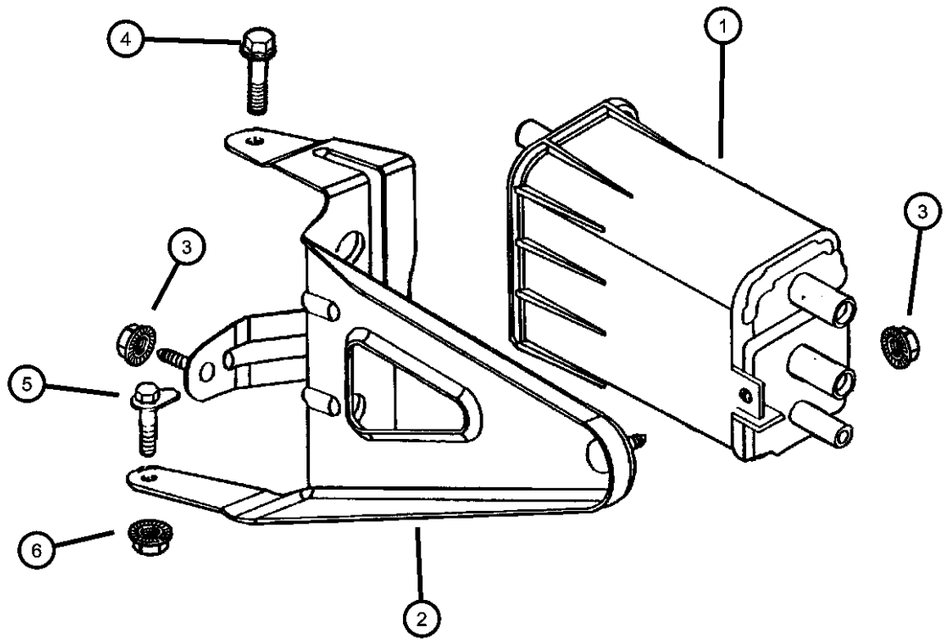

ITEM	PART NUMBER	QTY	LINE	SERIES	BODY	ENGINE	TRANS	TRIM	DESCRIPTION
1	53030838	1							CANISTER, Vapor
2	53032104AA	1							BRACKET, Vapor Canister
3	06101467	2							NUT, Hex Flange, M8x1.25
4	06101467	2							SCREW, Hex Flange Head, M8x1.25x25.00, (NOT SERVICED)
5	06504781	1							BOLT, M10x1.50x35
6	06502979	1							NUT AND WASHER, Hex, M10x1.5

DAKOTA (AN)

SERIES	LINE	BODY	ENGINE	TRANSMISSION
L = Dakota (All)	1 = Dakota 2WD	61 = Regular Cab (112 WB)	EPE = 2.5L 4 Cylinder	DGK = 4 Speed Automatic 42RE
	5 = Dakota 4WD	31 = Club Cab (131 WB)	EHC = 3.9L 6 Cylinder	DGT = 4 Speed Automatic 46RE
		84 = Quad Cab (131 WB)	EML = 5.0L 8 Cylinder	DDC = 5 Speed HD Manual
			EVA = 4.7L Magnum V8	DDK = 5 Speed HD Manual
			EP0 = All 2.5L	DG4 = Multispeed Automatic 45RFE
			EH0 = All 3.9L	DG0 = All Automatic Transmissions
			EM0 = All 5.9L	DBB = All Manual Transmissions
			EV0 = All 4.7L	

Emission Control Vacuum Harness, 2.5L [EPE]
Figure 25-410

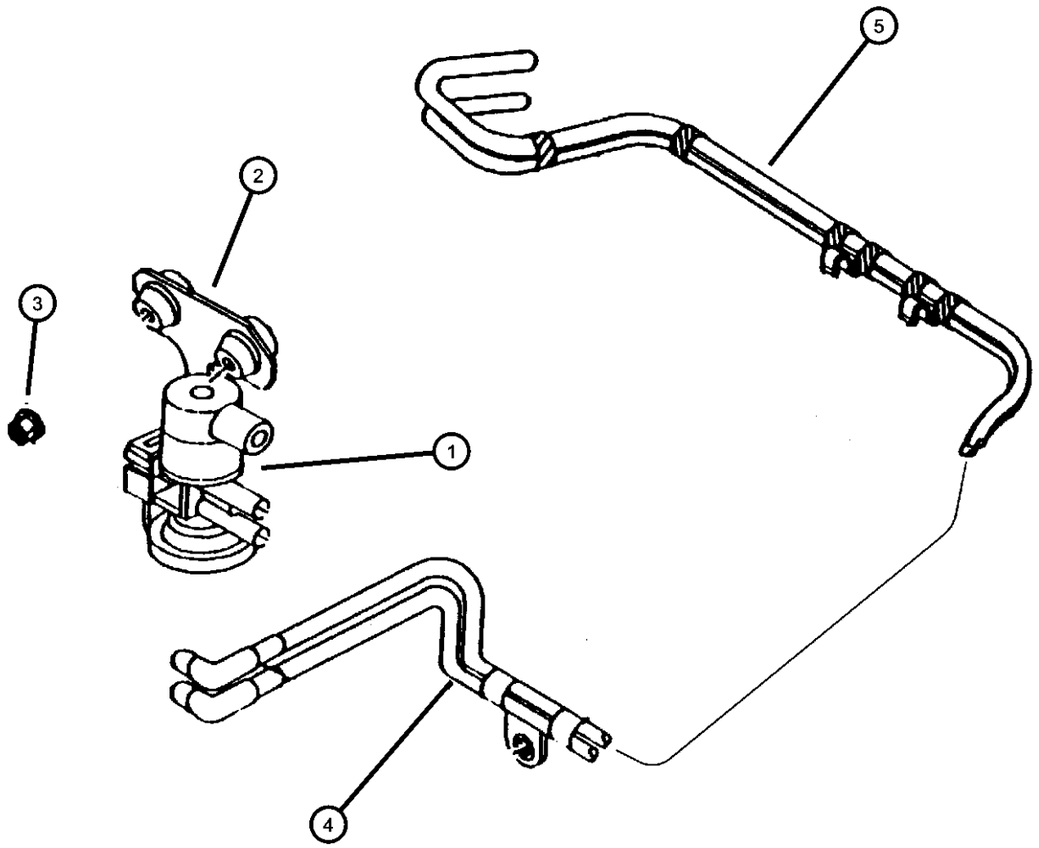

ITEM	PART NUMBER	QTY	LINE	SERIES	BODY	ENGINE	TRANS	TRIM	DESCRIPTION
Note; Sales Codes									
[EP0]= All 2.5L, 4 Cylindr Gas Engines									
1									SOLENOID, Duty Cycle Purge
	04669475AB	1							U.S. 50 States
		1							Export
2	52850614AB	1				EP0			BRACKET, Vacuum Solenoid
3	06502064	1				EP0			SCREW, Tapping, M6x1x20
4									HARNESS, Vacuum
	52102713AC	1							Export
	52102714AC	1							U.S. 50 States
5									HARNESS, Canister Purge
	52102698AC	1							U.S. 50 States
	52102766AC	1							Export

DAKOTA (AN)

SERIES	LINE	BODY	ENGINE	TRANSMISSION
L = Dakota (All)	1 = Dakota 2WD	61 = Regular Cab (112 WB)	EPE = 2.5L 4 Cylinder	DGK = 4 Speed Automatic 42RE
	5 = Dakota 4WD	31 = Club Cab (131 WB)	EHC = 3.9L 6 Cylinder	DGT = 4 Speed Automatic 46RE
		84 = Quad Cab (131 WB)	EML = 5.0L 8 Cylinder	DDC = 5 Speed HD Manual
			EVA = 4.7L Magnum V8	DDK = 5 Speed HD Manual
			EP0 = All 2.5L	DG4 = Multispeed Automatic 45RFE
			EH0 = All 3.9L	DG0 = All Automatic Transmissions
			EM0 = All 5.9L	DBB = All Manual Transmissions
			EV0 = All 4.7L	

Emission Control Vacuum Harness, 3.9L [EHC], 4.7L [EVA], 5.9L [EML]
Figure 25-420

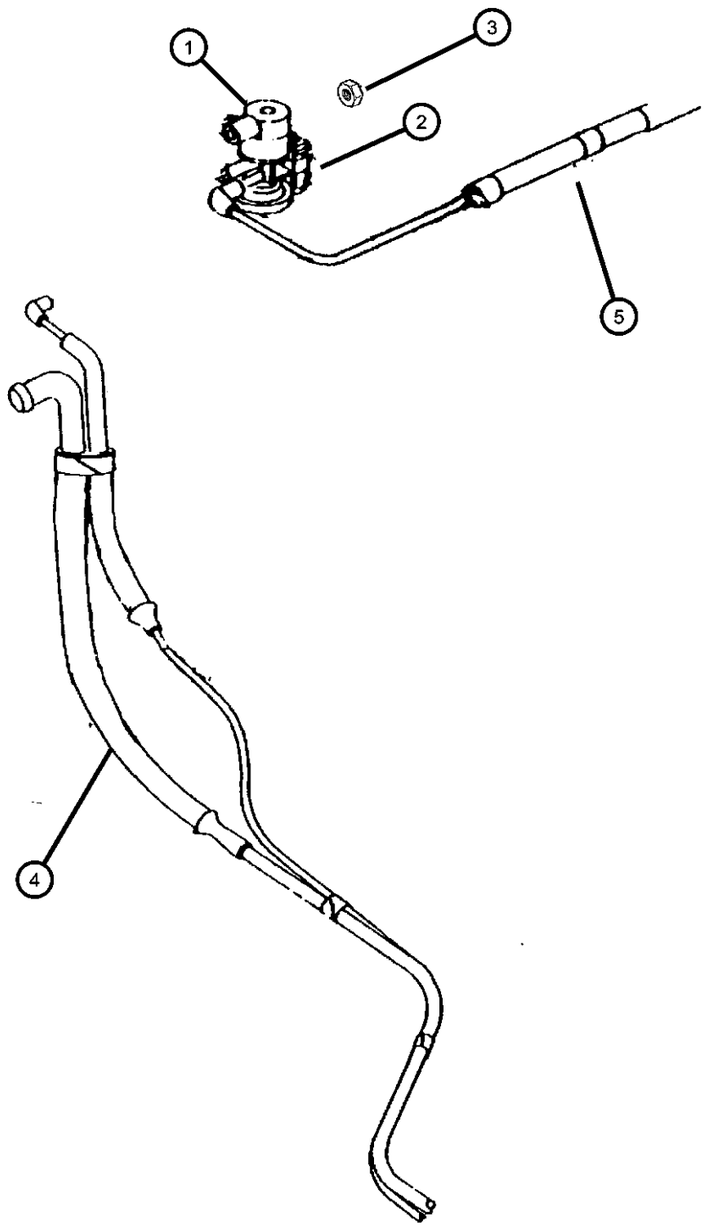

ITEM	PART NUMBER	QTY	LINE	SERIES	BODY	ENGINE	TRANS	TRIM	DESCRIPTION
Note; Sales Codes [EH0]= All 3.9L V-6 Gas Engines [EM0]= All 5.9L V-8 Gas Engines [EV0]= All 4.7L V-8 Gas Engines									
1									SOLENOID, Duty Cycle Purge
	04669475AB	1							U.S. 50 States
		1							Export
2	52850614AB	1				EH0, EM0, EV0			BRACKET, Vacuum Solenoid
3	06502064	3				EH0, EM0, EV0			SCREW, Tapping, M6x1x20
4									HARNESS, Canister Purge
	52102698AC	1							U.S. 50 States
	52102766AC	1							Export
5									HARNESS, Vacuum
	52102713AC	1							Export
	52102714AC	1							U.S. 50 States

DAKOTA (AN)

SERIES	LINE	BODY	ENGINE	TRANSMISSION
L = Dakota (All)	1 = Dakota 2WD 5 = Dakota 4WD	61 = Regular Cab (112 WB) 31 = Club Cab (131 WB) 84 = Quad Cab (131 WB)	EPE = 2.5L 4 Cylinder EHC = 3.9L 6 Cylinder EML = 5.0L 8 Cylinder EVA = 4.7L Magnum V8 EP0 = All 2.5L EH0 = All 3.9L EM0 = All 5.9L EV0 = All 4.7L	DGK = 4 Speed Automatic 42RE DGT = 4 Speed Automatic 46RE DDC = 5 Speed HD Manual DDK = 5 Speed HD Manual DG4 = Multispeed Automatic 45RFE DG0 = All Automatic Transmissions DBB = All Manual Transmissions

Leak Detection Pump, All Engines
Figure 25-430

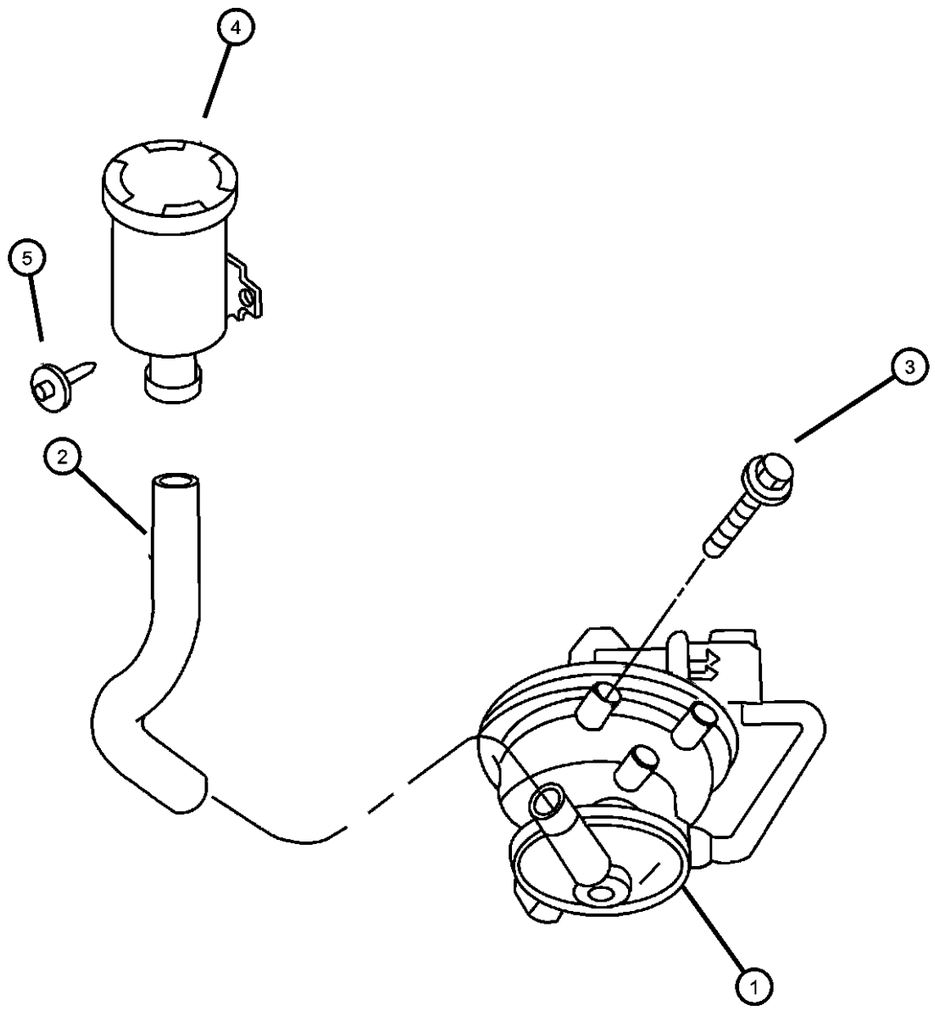

ITEM	PART NUMBER	QTY	LINE	SERIES	BODY	ENGINE	TRANS	TRIM	DESCRIPTION
Note; Sales Codes									
[EP0]= All 2.5L, 4 Cylinder Gas Engines									
1	04891422AB	1							PUMP, Leak Detection
2									HOSE, Leak Detection Pump
	52102812AB	1				EP0			Pump To Manifold
	53030897AB	1							Pump To Air Filter
3	53030897AB	1							SCREW, Pan Head, M4.8x1.59x13.00, (NOT SERVICED),
4	04612901	1							FILTER, Fuel Vapor Vent
5	04612901	1							FASTENER, (NOT SERVICED)

DAKOTA (AN)

SERIES	LINE	BODY	ENGINE	TRANSMISSION
L = Dakota (All)	1 = Dakota 2WD	61 = Regular Cab (112 WB)	EPE = 2.5L 4 Cylinder	DGK = 4 Speed Automatic 42RE
	5 = Dakota 4WD	31 = Club Cab (131 WB)	EHC = 3.9L 6 Cylinder	DGT = 4 Speed Automatic 46RE
		84 = Quad Cab (131 WB)	EML = 5.0L 8 Cylinder	DDC = 5 Speed HD Manual
			EVA = 4.7L Magnum V8	DDK = 5 Speed HD Manual
			EP0 = All 2.5L	DG4 = Multispeed Automatic 45RFE
			EH0 = All 3.9L	DG0 = All Automatic Transmissions
			EM0 = All 5.9L	DBB = All Manual Transmissions
			EV0 = All 4.7L	

Group - DAN

Doors and Related Parts

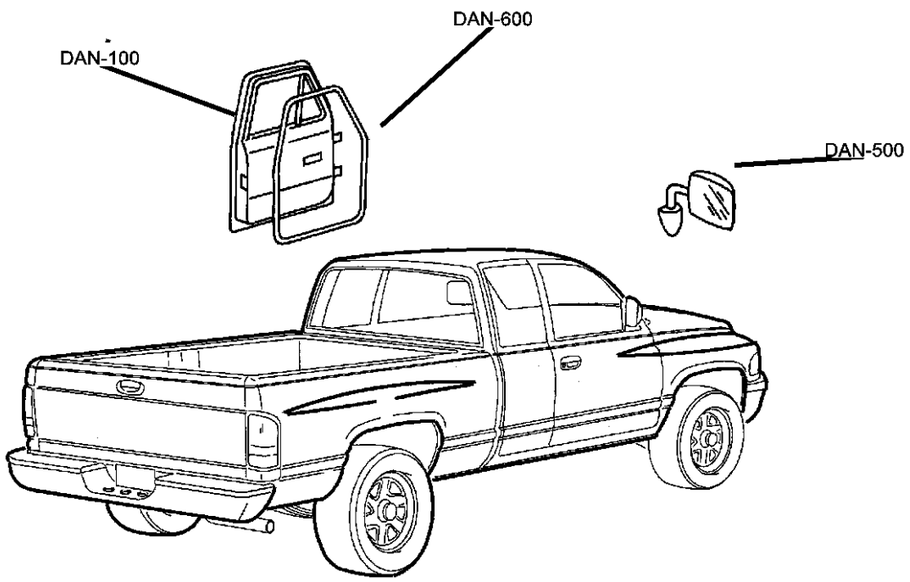

DAN-100 Front Door	DAN-200 Rear Door	DAN-500 Exterior Mirror	DAN-600 Weatherstrips and Seals
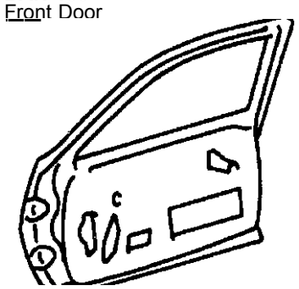	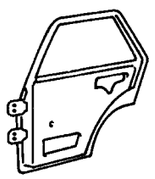	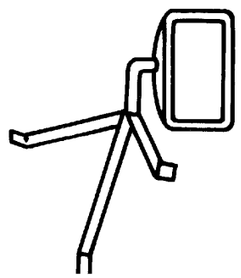	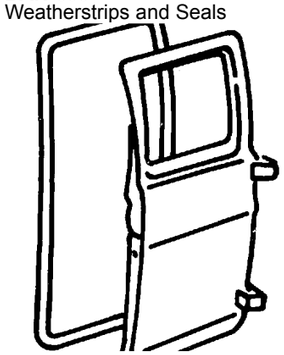

Group - DAN Doors and Related Parts

Illustration Title — Group-Fig. No.

Front Door
Door, Front Shell And Hinges ..... Fig. DAN - 110
Door, Front Glass, Regulators ..... Fig. DAN - 120
Door, Front Lock And Controls ..... Fig. DAN - 130

Rear Door
Door, Rear Shell and Hinges ..... Fig. DAN - 210
Door, Rear Glass, Regulators ..... Fig. DAN - 220
Door, Rear Lock and Controls ..... Fig. DAN - 230

Exterior Mirror
Mirrors, Exterior ..... Fig. DAN - 510

Weatherstrips and Seals
Door, Front Weatherstrips and Seals ..... Fig. DAN - 610
Door, Rear Weatherstrips and Seals ..... Fig. DAN - 620

Door, Front Shell And Hinges
Figure DAN-110

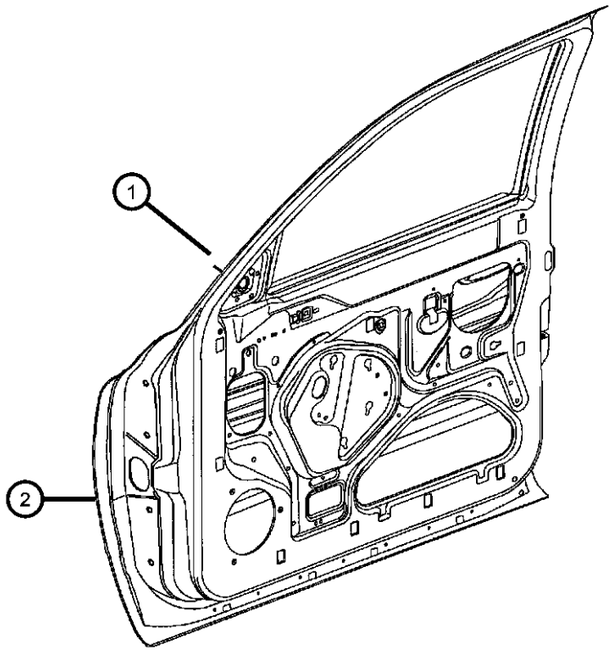

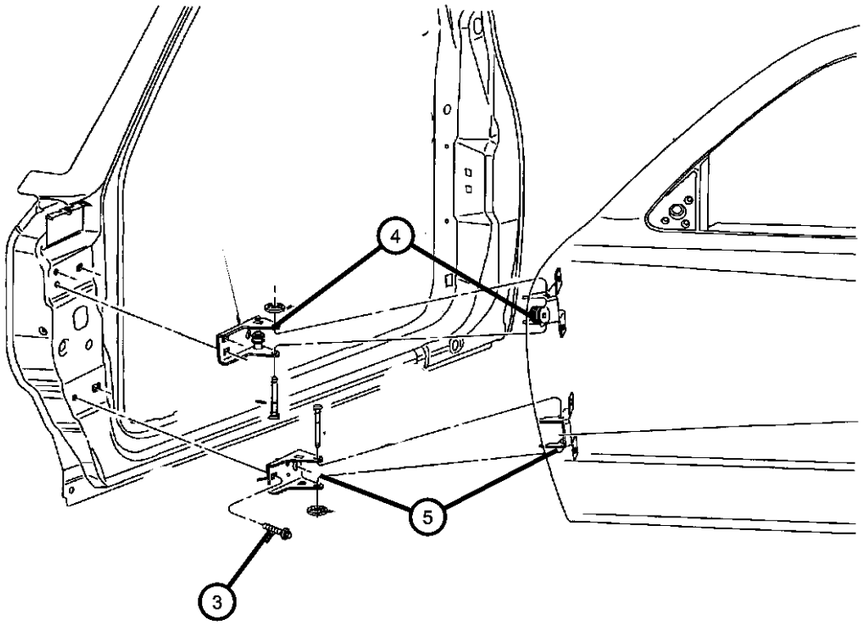

ITEM	PART NUMBER	QTY	LINE	SERIES	BODY	ENGINE	TRANS	TRIM	DESCRIPTION
1									DOOR, Front
	55255080AH	1			31, 61				Right
	55255081AH	1			31, 61				Left
	55256360AE	1			84				Right
	55256361AE	1			84				Left
2									PANEL, Door Outer
	55255462AB	1			31, 61				Right
	55255463AB	1			31, 61				Left
	55256362	1			84				Right
	55256363	1			84				Left
3	06503538	12							SCREW AND WASHER, Hex Head, M8x1.25x30
4									HINGE, Front Door Upper
	55256914AC	1							Right
	55256915AC	1							Left
5	55256912AB	2							HINGE, Front Door Lower

DAKOTA (AN)

SERIES	LINE	BODY	ENGINE	TRANSMISSION
L = Dakota (All)	1 = Dakota 2WD	61 = Regular Cab (112 WB)	EPE = 2.5L 4 Cylinder	DGK = 4 Speed Automatic 42RE
	5 = Dakota 4WD	31 = Club Cab (131 WB)	EHC = 3.9L 6 Cylinder	DGT = 4 Speed Automatic 46RE
		84 = Quad Cab (131 WB)	EML = 5.0L 8 Cylinder	DDC = 5 Speed HD Manual
			EVA = 4.7L Magnum V8	DDK = 5 Speed HD Manual
			EP0 = All 2.5L	DG4 = Multispeed Automatic 45RFE
			EH0 = All 3.9L	DG0 = All Automatic Transmissions
			EM0 = All 5.9L	DBB = All Manual Transmissions
			EV0 = All 4.7L	

Door, Front Glass, Regulators
Figure DAN-120

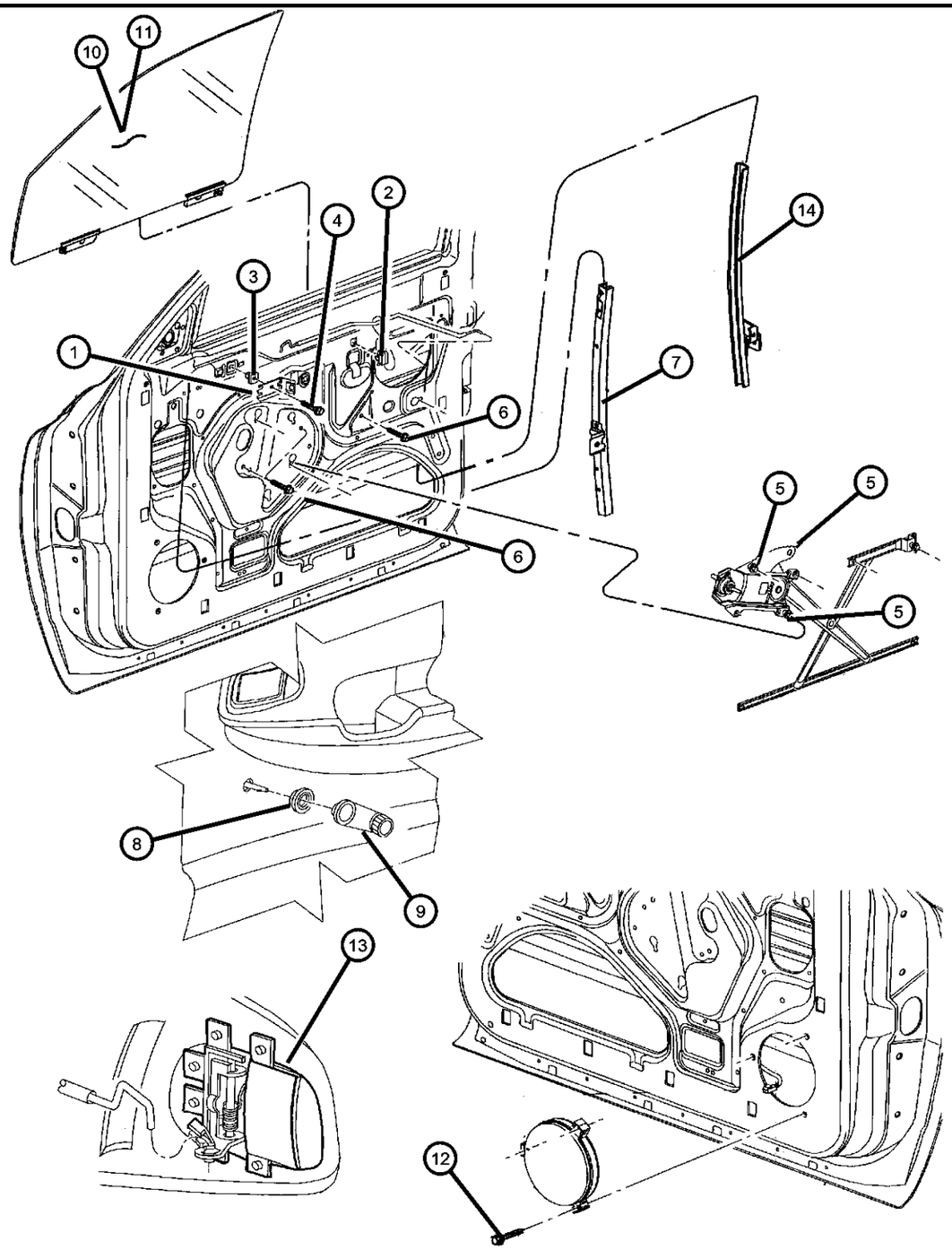

ITEM	PART NUMBER	QTY	LINE	SERIES	BODY	ENGINE	TRANS	TRIM	DESCRIPTION
1	55257456AA	2							BRACKET, Inside Handle
2	04673358	2							CLIP, Anti Rattle
3	04673358	2							NUT, (NOT SERVICED)
4	06035372	2							SCREW, Pan Head Tapping, M6.3x1.8x22.23
5									REGULATOR, Front Door Window
	55075798	1			31, 61				Manual, Right
	55075799	1			31, 61				Manual, Left
	55255618AB	1			31, 61				Electric, Right
	55255619AB	1			31, 61				Electric, Left
	55256314AG	1			84				Manual, Right
	55256315AG	1			84				Manual, Left
	55256418AM	1			84				Electric, Right
	55256419AL	1			84				Electric, Left
6	55256419AL	1							SCREW, Hex Head, M6x1x16, 6504055, (NOT SERVICED),
7									CHANNEL, Front Door Glass Lower
	55256992	1			84				Right
	55256993	1			84				Left
	55257012AB	1			31, 61				Right
	55257013AB	1			31, 61				Left
8									SPACER, Door Handle
	55076218	2			31, 61				
		2			84				
9	0FW80PX9	2							HANDLE, Window Regulator
10									GLASS, Front Door
	55257024AB	1			31, 61				Right
	55257025AB	1			31, 61				Left
11									GLASS, Door
	55256302AC	1			84				Right
	55256303AC	1			84				Left
12	55256303AC	1							SCREW, (NOT SERVICED)

DAKOTA (AN)

SERIES	LINE	BODY	ENGINE	TRANSMISSION
L = Dakota (All)	1 = Dakota 2WD 5 = Dakota 4WD	61 = Regular Cab (112 WB) 31 = Club Cab (131 WB) 84 = Quad Cab (131 WB)	EPE = 2.5L 4 Cylinder EHC = 3.9L 6 Cylinder EML = 5.0L 8 Cylinder EVA = 4.7L Magnum V8 EP0 = All 2.5L EH0 = All 3.9L EM0 = All 5.9L EV0 = All 4.7L	DGK = 4 Speed Automatic 42RE DGT = 4 Speed Automatic 46RE DDC = 5 Speed HD Manual DDK = 5 Speed HD Manual DG4 = Multispeed Automatic 45RFE DG0 = All Automatic Transmissions DBB = All Manual Transmissions

AR = use ase required - = Non illustrrated part

Door, Front Glass, Regulators
Figure DAN-120

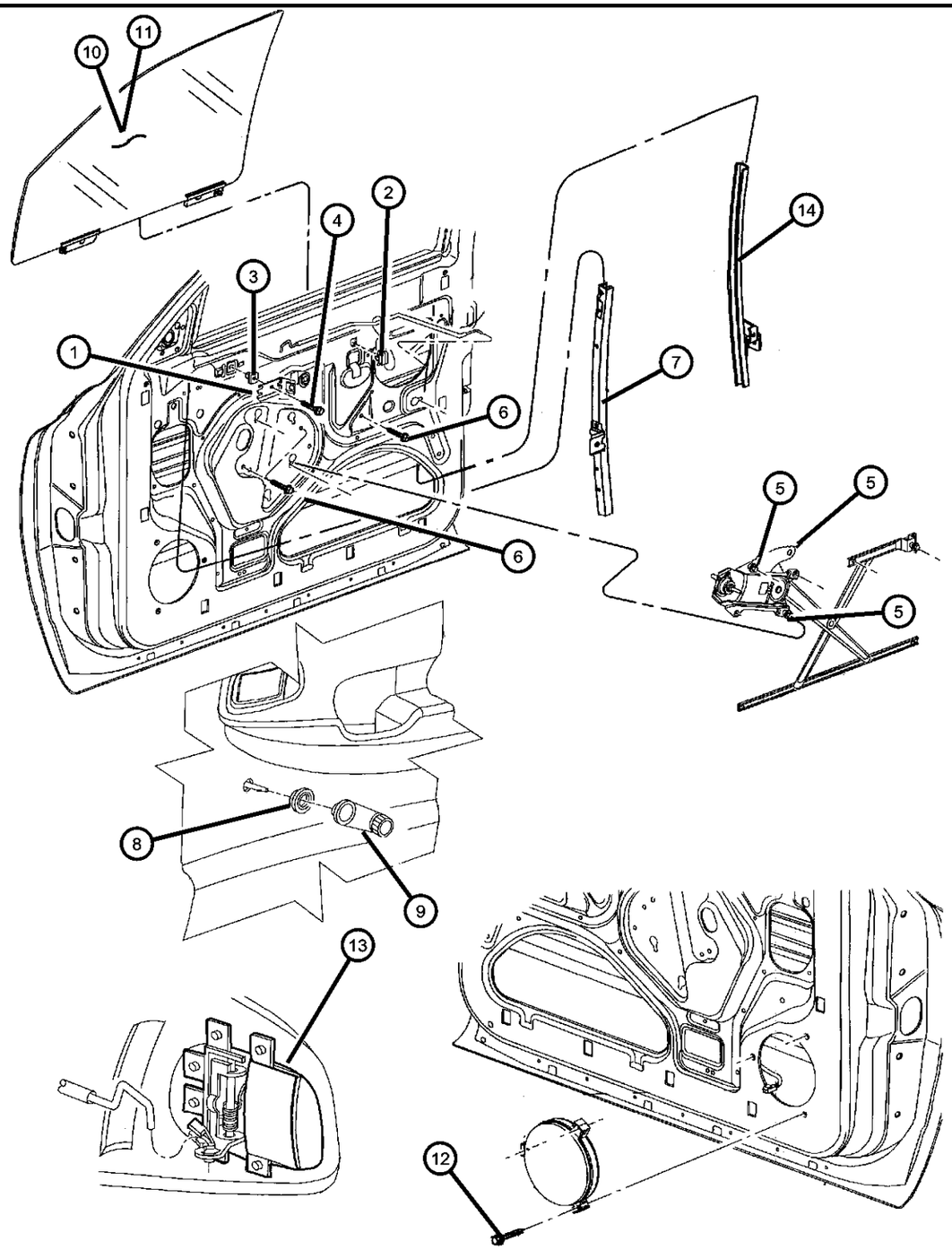

ITEM	PART NUMBER	QTY	LINE	SERIES	BODY	ENGINE	TRANS	TRIM	DESCRIPTION
13	55256303AC	1							HANDLE, Door Interior, Serviced in Door Trim Panel, (NOT SERVICED)
14									CHANNEL, Rear Door Glass Lower
	55257010AC	1			31, 61				Right
	55257011AC	1			31, 61				Left

DAKOTA (AN)

SERIES	LINE	BODY	ENGINE	TRANSMISSION
L = Dakota (All)	1 = Dakota 2WD	61 = Regular Cab (112 WB)	EPE = 2.5L 4 Cylinder	DGK = 4 Speed Automatic 42RE
	5 = Dakota 4WD	31 = Club Cab (131 WB)	EHC = 3.9L 6 Cylinder	DGT = 4 Speed Automatic 46RE
		84 = Quad Cab (131 WB)	EML = 5.0L 8 Cylinder	DDC = 5 Speed HD Manual
			EVA = 4.7L Magnum V8	DDK = 5 Speed HD Manual
			EP0 = All 2.5L	DG4 = Multispeed Automatic 45RFE
			EH0 = All 3.9L	DG0 = All Automatic Transmissions
			EM0 = All 5.9L	DBB = All Manual Transmissions
			EV0 = All 4.7L	

AR = use ase required - = Non illustrrated part

Door, Front Lock And Controls
Figure DAN-130

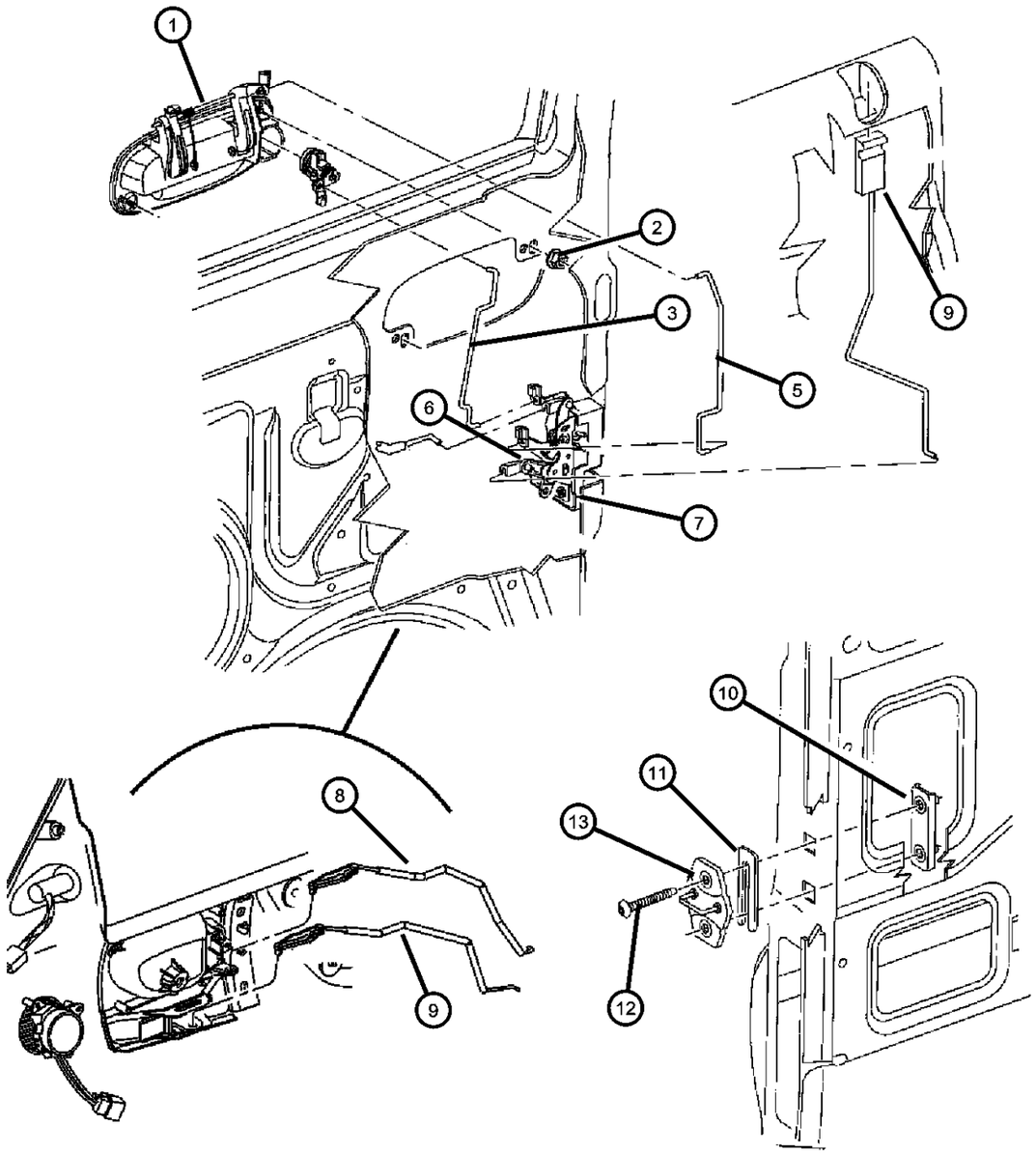

ITEM	PART NUMBER	QTY	LINE	SERIES	BODY	ENGINE	TRANS	TRIM	DESCRIPTION
1									HANDLE, Exterior Door
	55362890AB	1							Right
	55362891AB	1							Left
2									NUT AND WASHER, Hex, M5x.80
	06101443	4			31, 61				
		4			84				
3									LINK, Door Latch
	55075942AE	1			31, 61				Right
	55075943AE	1			31, 61				Left
	55362932AE	1			84				Right
	55362933AE	1			84				Left
-4									CLIP, Door Lever To Link
	55362384AA	1			31, 61				Right
		1			84				Right
	55362385AA	1			31, 61				Left
		1			84				Left
5									LINK, Door Latch
	55257274AA	2			84				Handle to latch
	55362310AA	1			31, 61				Right
	55362311AA	1			31, 61				Left
6	55362311AA	1							SCREW, Tapping, .25-14x1.85, (NOT SERVICED)
7									LATCH, Front Door
	55256712AD	1							W/Power Locks, Right
	55256713AD	1							W/Power Locks, Left
	55256834AH	1							W/o Power Locks, Right
	55256835AH	1							W/o Power Locks, Left
8									LINK, Door Latch, Remote Control to Latch
	55362930AA	1			31, 61				Right
	55362931AA	1			31, 61				Left
	55362934AA	1			84				Right
	55362935AA	1			84				Left
9									LINK, Door Latch, Inside Lock

DAKOTA (AN)

SERIES	LINE	BODY	ENGINE	TRANSMISSION
L = Dakota (All)	1 = Dakota 2WD	61 = Regular Cab (112 WB)	EPE = 2.5L 4 Cylinder	DGK = 4 Speed Automatic 42RE
	5 = Dakota 4WD	31 = Club Cab (131 WB)	EHC = 3.9L 6 Cylinder	DGT = 4 Speed Automatic 46RE
		84 = Quad Cab (131 WB)	EML = 5.0L 8 Cylinder	DDC = 5 Speed HD Manual
			EVA = 4.7L Magnum V8	DDK = 5 Speed HD Manual
			EP0 = All 2.5L	DG4 = Multispeed Automatic 45RFE
			EH0 = All 3.9L	DG0 = All Automatic Transmissions
			EM0 = All 5.9L	DBB = All Manual Transmissions
			EV0 = All 4.7L	

Door, Front Lock And Controls
Figure DAN-130

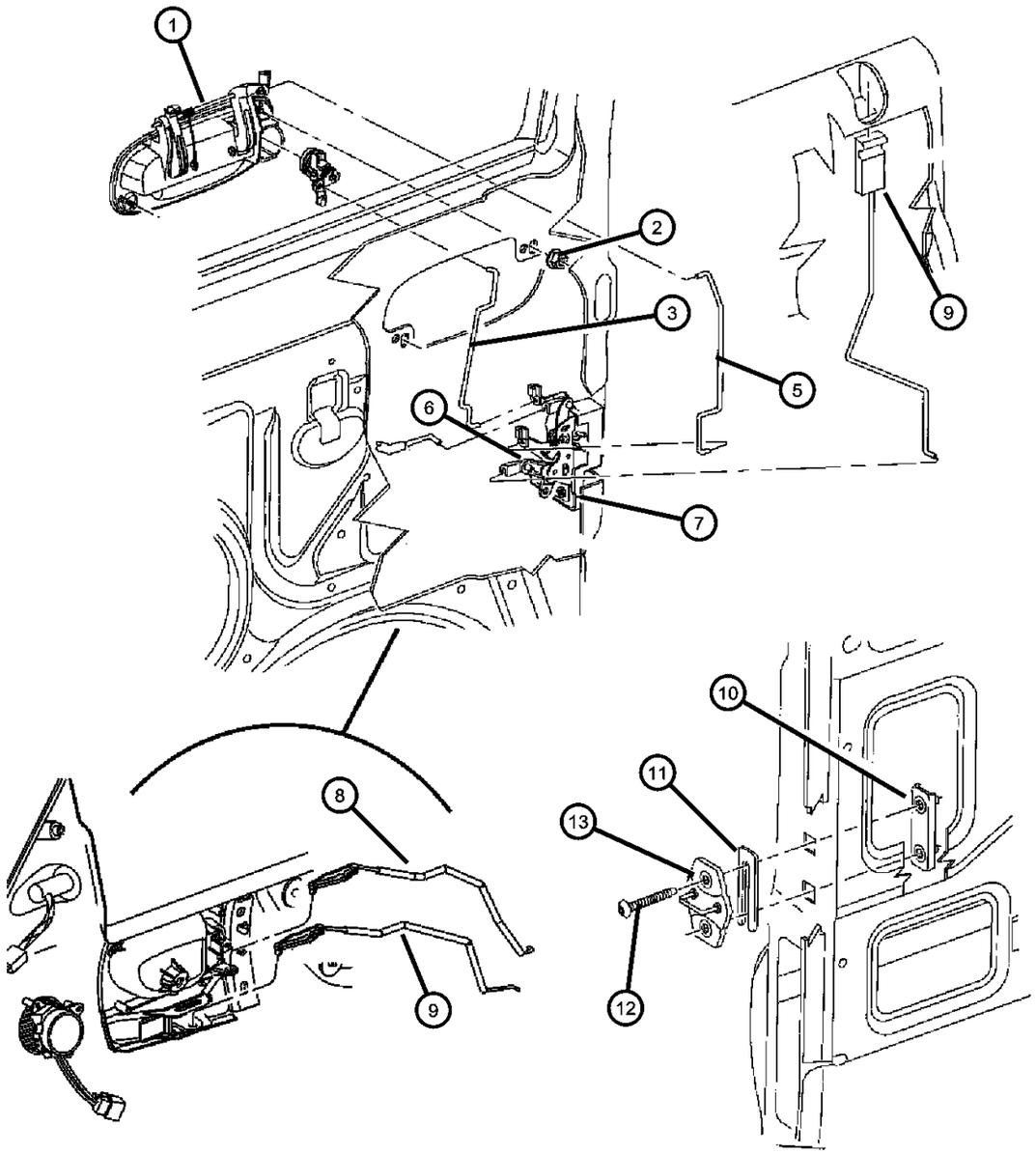

ITEM	PART NUMBER	QTY	LINE	SERIES	BODY	ENGINE	TRANS	TRIM	DESCRIPTION
	55257458AD	1			84				Right
	55257459AD	1			84				Left
	55257460AD	1			31, 61				Right
	55257461AD	1			31, 61				Left
10	55256000	2							PLATE, Front Door Striker
11	55075483	AR							SPACER, Door Latch Striker
12	55075483	AR							SCREW, Oval Head, M8x1.25x6, (NOT SERVICED)
13	04780607AA	2							STRIKER, Door

DAKOTA (AN)

SERIES	LINE	BODY	ENGINE	TRANSMISSION
L = Dakota (All)	1 = Dakota 2WD	61 = Regular Cab (112 WB)	EPE = 2.5L 4 Cylinder	DGK = 4 Speed Automatic 42RE
	5 = Dakota 4WD	31 = Club Cab (131 WB)	EHC = 3.9L 6 Cylinder	DGT = 4 Speed Automatic 46RE
		84 = Quad Cab (131 WB)	EML = 5.0L 8 Cylinder	DDC = 5 Speed HD Manual
			EVA = 4.7L Magnum V8	DDK = 5 Speed HD Manual
			EP0 = All 2.5L	DG4 = Multispeed Automatic 45RFE
			EH0 = All 3.9L	DG0 = All Automatic Transmissions
			EM0 = All 5.9L	DBB = All Manual Transmissions
			EV0 = All 4.7L	

AR = use ase required - = Non illustrrated part

Door, Rear Shell and Hinges
Figure DAN-210

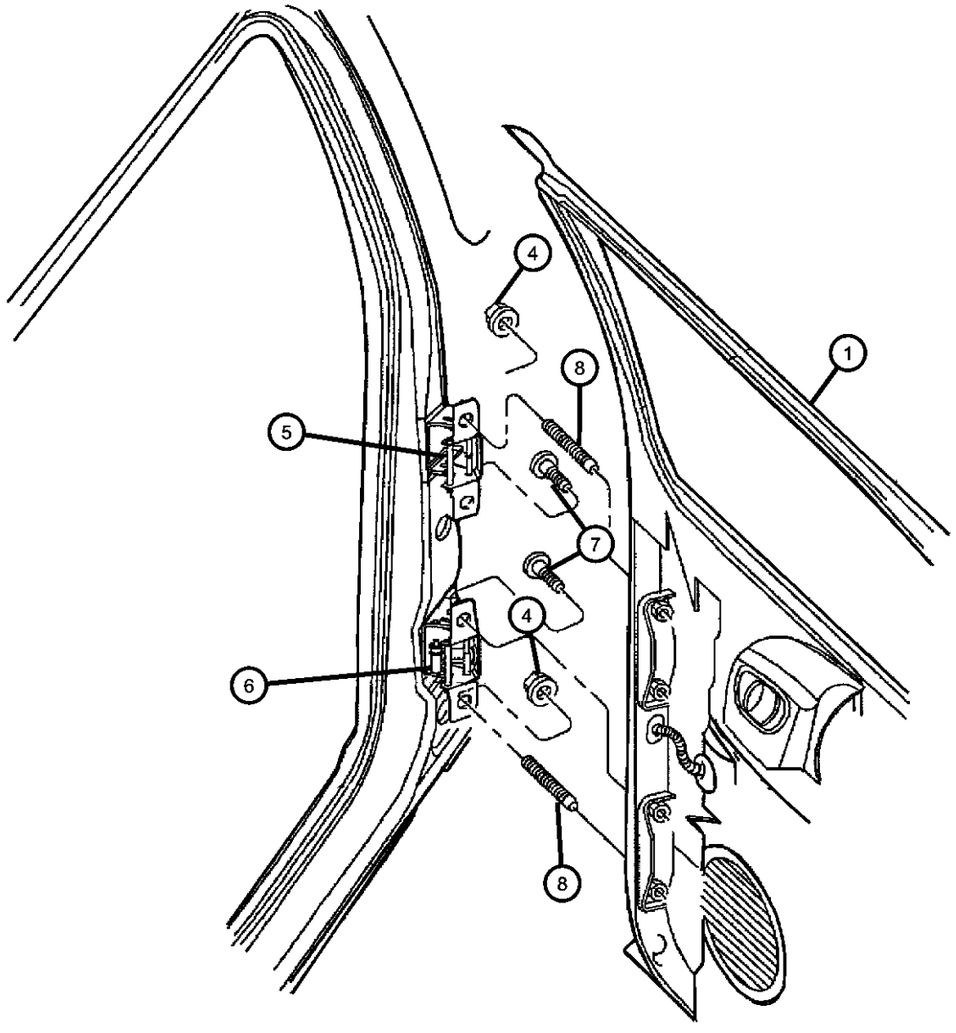

ITEM	PART NUMBER	QTY	LINE	SERIES	BODY	ENGINE	TRANS	TRIM	DESCRIPTION
1									DOOR, Rear
	55257164AB	1			84				Right
	55257165AB	1			84				Left
-2	55032184	1			84				DEADENER, Door Panel
-3	55255776	1			84				EXTENSION, Door Glass Channel
4	06101916	4			84				NUT, Hex Weld, M8x1.25
5	55257206AA	2			84				HINGE, Rear Door Upper
6	55257208AA	2			84				HINGE, Rear Door Lower
7	06505269AA	4			84				SCREW AND WASHER, Head Head Lock, M8-1.25x30.00
8	06504804	4			84				STUD, M8-1.25x46
-9	55032184AB	2			84				DEADENER, Door Panel

DAKOTA (AN)

SERIES	LINE	BODY	ENGINE	TRANSMISSION
L = Dakota (All)	1 = Dakota 2WD	61 = Regular Cab (112 WB)	EPE = 2.5L 4 Cylinder	DGK = 4 Speed Automatic 42RE
	5 = Dakota 4WD	31 = Club Cab (131 WB)	EHC = 3.9L 6 Cylinder	DGT = 4 Speed Automatic 46RE
		84 = Quad Cab (131 WB)	EML = 5.0L 8 Cylinder	DDC = 5 Speed HD Manual
			EVA = 4.7L Magnum V8	DDK = 5 Speed HD Manual
			EP0 = All 2.5L	DG4 = Multispeed Automatic 45RFE
			EH0 = All 3.9L	DG0 = All Automatic Transmissions
			EM0 = All 5.9L	DBB = All Manual Transmissions
			EV0 = All 4.7L	

Door, Rear Glass, Regulators
Figure DAN-220

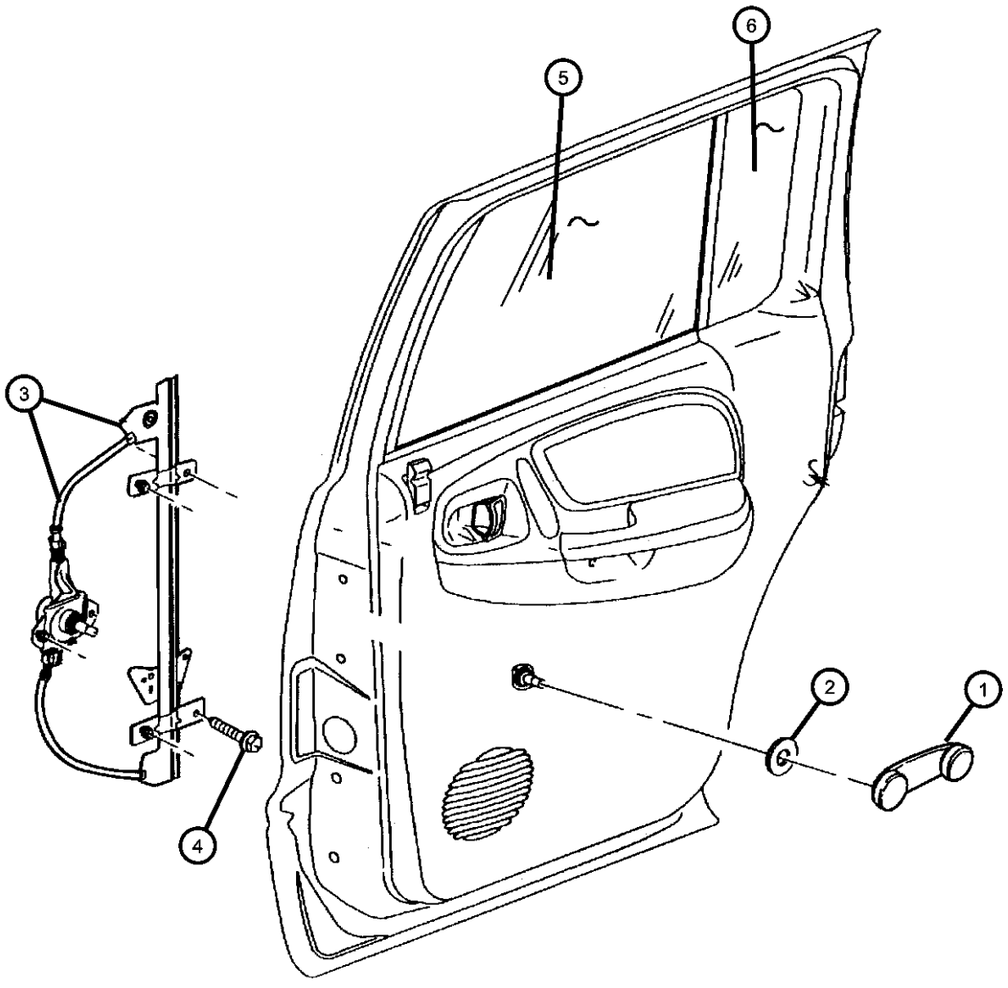

ITEM	PART NUMBER	QTY	LINE	SERIES	BODY	ENGINE	TRANS	TRIM	DESCRIPTION
1	0FW80PX9	2							HANDLE, Window Regulator
2	55076218	2			84				SPACER, Door Handle
3									REGULATOR, Rear Door Window
	55256494AJ	1			84				with Power Windows, Right
	55256495AJ	1			84				with Power Windows, Left
	55256572AD	1			84				without Power Windows, Right
	55256573AD	1			84				without Power Windows, Left
4	06101719	1							SCREW AND WASHER, Tapping, M6-1.0x20.0
5									GLASS, Rear Door
	55257190AA	1			84				Right
	55257191AA	1			84				Left
6									GLASS, Rear Door, Fixed
	55257230AC	1			84				Right
	55257231AC	1			84				Left
-7									CHANNEL, Door Glass
	55256910AC	1			84				Lower, Right
	55256911AC	1			84				Lower, Left

DAKOTA (AN)

SERIES	LINE	BODY	ENGINE	TRANSMISSION
L = Dakota (All)	1 = Dakota 2WD	61 = Regular Cab (112 WB)	EPE = 2.5L 4 Cylinder	DGK = 4 Speed Automatic 42RE
	5 = Dakota 4WD	31 = Club Cab (131 WB)	EHC = 3.9L 6 Cylinder	DGT = 4 Speed Automatic 46RE
		84 = Quad Cab (131 WB)	EML = 5.0L 8 Cylinder	DDC = 5 Speed HD Manual
			EVA = 4.7L Magnum V8	DDK = 5 Speed HD Manual
			EP0 = All 2.5L	DG4 = Multispeed Automatic 45RFE
			EH0 = All 3.9L	DG0 = All Automatic Transmissions
			EM0 = All 5.9L	DBB = All Manual Transmissions
			EV0 = All 4.7L	

Door, Rear Lock and Controls
Figure DAN-230

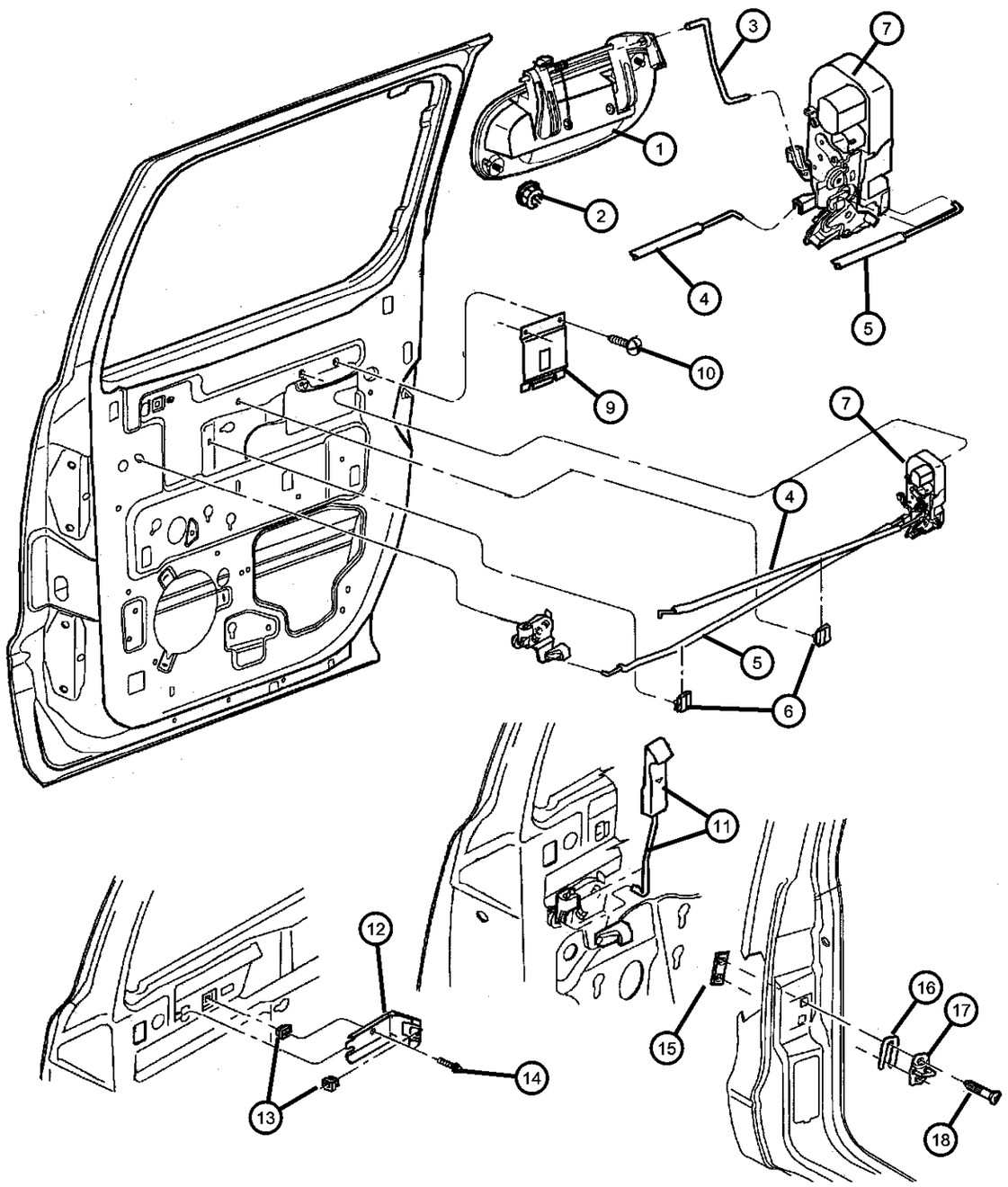

ITEM	PART NUMBER	QTY	LINE	SERIES	BODY	ENGINE	TRANS	TRIM	DESCRIPTION
1									HANDLE, Exterior Door
	55362892AB	1			84				Right
	55362893AB	1			84				Left
2	06101443	4			84				NUT AND WASHER, Hex, M5x.80
3	55257274AA	2			84				LINK, Door Latch
4									LINK AND SLEEVE, Rear Door Inside Remote to Latch
	55362924AB	1			84				Right
	55362925AB	1			84				Left
5									LINK AND SLEEVE, Rear Door Inside Remote to Latch
	55362926AB	1			84				Right
	55362927AB	1			84				Left
6	04673358	2			84				CLIP, Anti Rattle
7									LATCH, Rear Door
	55256426AB	1			84				without Power Door Locks, Right
	55256427AB	1			84				without Power Door Locks, Left
	55256714AB	1			84				with Power Door Locks, Right
	55256715AB	1			84				with Power Door Locks, Left
-8	06507121AA	6			84				SCREW
9	55257268AB	2			84				PLATE, Armrest
10	55257268AB	2							SCREW AND WASHER, Round Head, .164-15x.625, (NOT SERVICED)
11									LINK, Door Latch
	55257458AD	1			84				Right
	55257459AD	1			84				Left
12	55257490AC	2			84				BRACKET, Inside Handle
13	06501773	2							NUT, Plastic Snap-in
14	06035372	2			84				SCREW, Pan Head Tapping, M6.3x1.8x22.23
15	55256000	2			84				PLATE, Front Door Striker
16	04520289	AR			84				SPACER, Door Latch Striker
17	04780607AA	2			84				STRIKER, Door

DAKOTA (AN)

SERIES	LINE	BODY	ENGINE	TRANSMISSION
L = Dakota (All)	1 = Dakota 2WD 5 = Dakota 4WD	61 = Regular Cab (112 WB) 31 = Club Cab (131 WB) 84 = Quad Cab (131 WB)	EPE = 2.5L 4 Cylinder EHC = 3.9L 6 Cylinder EML = 5.0L 8 Cylinder EVA = 4.7L Magnum V8 EP0 = All 2.5L EH0 = All 3.9L EM0 = All 5.9L EV0 = All 4.7L	DGK = 4 Speed Automatic 42RE DGT = 4 Speed Automatic 46RE DDC = 5 Speed HD Manual DDK = 5 Speed HD Manual DG4 = Multispeed Automatic 45RFE DG0 = All Automatic Transmissions DBB = All Manual Transmissions

AR = use ase required - = Non illustrrated part

Door, Rear Lock and Controls
Figure DAN-230

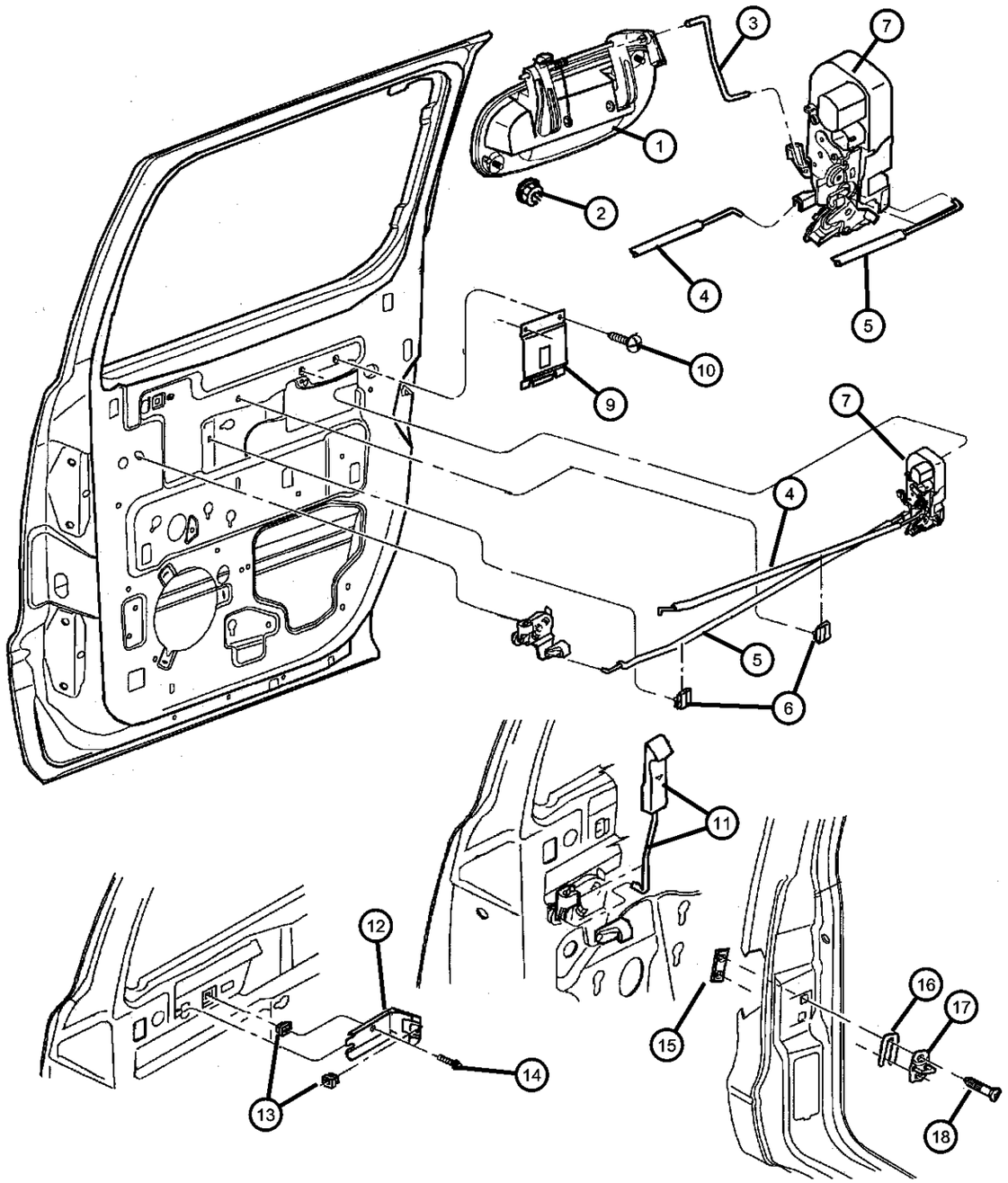

ITEM	PART NUMBER	QTY	LINE	SERIES	BODY	ENGINE	TRANS	TRIM	DESCRIPTION
18	06503120	4			84				SCREW AND WASHER, Button Head Torx
-19	05056072AA	2			84				LABEL, Child Protection Lock, English

DAKOTA (AN)

SERIES	LINE	BODY	ENGINE	TRANSMISSION
L = Dakota (All)	1 = Dakota 2WD	61 = Regular Cab (112 WB)	EPE = 2.5L 4 Cylinder	DGK = 4 Speed Automatic 42RE
	5 = Dakota 4WD	31 = Club Cab (131 WB)	EHC = 3.9L 6 Cylinder	DGT = 4 Speed Automatic 46RE
		84 = Quad Cab (131 WB)	EML = 5.0L 8 Cylinder	DDC = 5 Speed HD Manual
			EVA = 4.7L Magnum V8	DDK = 5 Speed HD Manual
			EP0 = All 2.5L	DG4 = Multispeed Automatic 45RFE
			EH0 = All 3.9L	DG0 = All Automatic Transmissions
			EM0 = All 5.9L	DBB = All Manual Transmissions
			EV0 = All 4.7L	

Mirrors, Exterior
Figure DAN-510

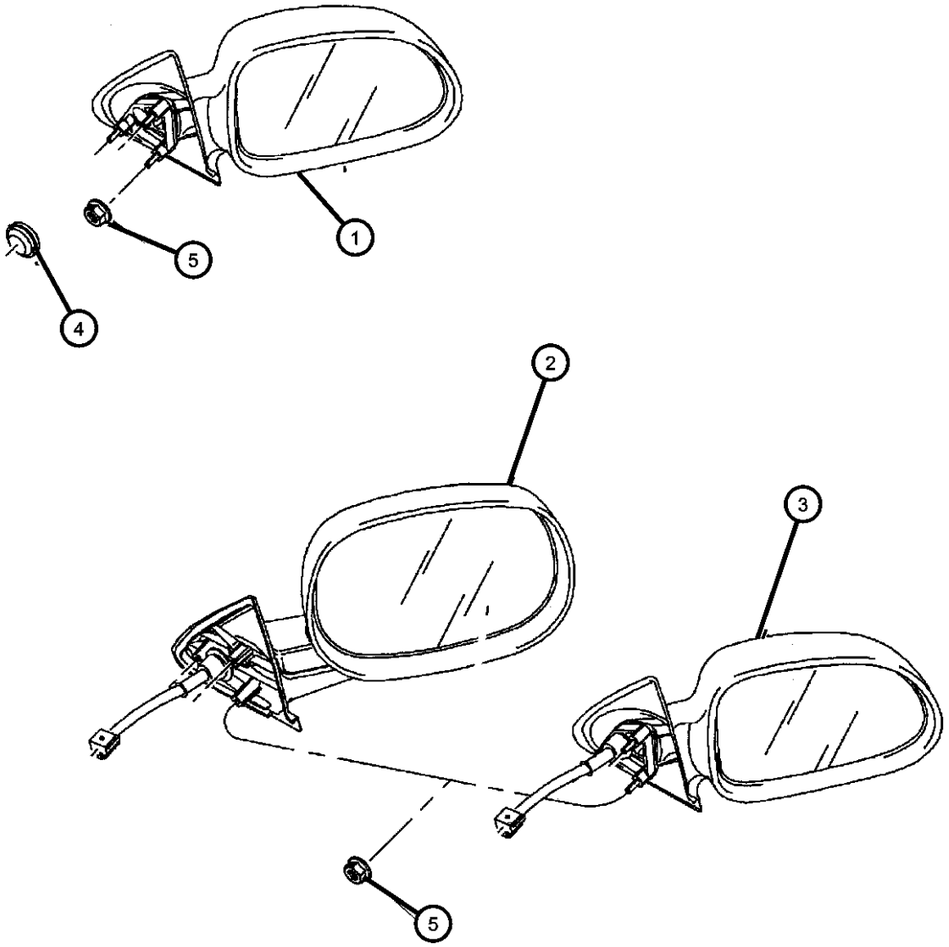

ITEM	PART NUMBER	QTY	LINE	SERIES	BODY	ENGINE	TRANS	TRIM	DESCRIPTION
1									MIRROR, Outside Rearview
	55154846AD	1							5x6 [GTU], Right
	55154847AC	1							5x6 [GTU], Left
2									MIRROR, Outside Rearview
	55077250AA	1							5x6 [GUR], Right
	55077251AA	1							5x6 [GUR], Left
3									MIRROR, Outside Rearview
	55077252AC	1							6x9 [GTS], Right
	55077253AC	1							6x9 [GTS], Left
4	02094631	2							PLUG, Timing Belt Cover
5	J4200408	6							NUT AND WASHER, Hex Nut-Coned Washer, M5 x 0.80
-6	06506306AA	4							NUT, Plastic

DAKOTA (AN)

SERIES	LINE	BODY	ENGINE	TRANSMISSION
L = Dakota (All)	1 = Dakota 2WD	61 = Regular Cab (112 WB)	EPE = 2.5L 4 Cylinder	DGK = 4 Speed Automatic 42RE
	5 = Dakota 4WD	31 = Club Cab (131 WB)	EHC = 3.9L 6 Cylinder	DGT = 4 Speed Automatic 46RE
		84 = Quad Cab (131 WB)	EML = 5.0L 8 Cylinder	DDC = 5 Speed HD Manual
			EVA = 4.7L Magnum V8	DDK = 5 Speed HD Manual
			EP0 = All 2.5L	DG4 = Multispeed Automatic 45RFE
			EH0 = All 3.9L	DG0 = All Automatic Transmissions
			EM0 = All 5.9L	DBB = All Manual Transmissions
			EV0 = All 4.7L	

Door, Front Weatherstrips and Seals
Figure DAN-610

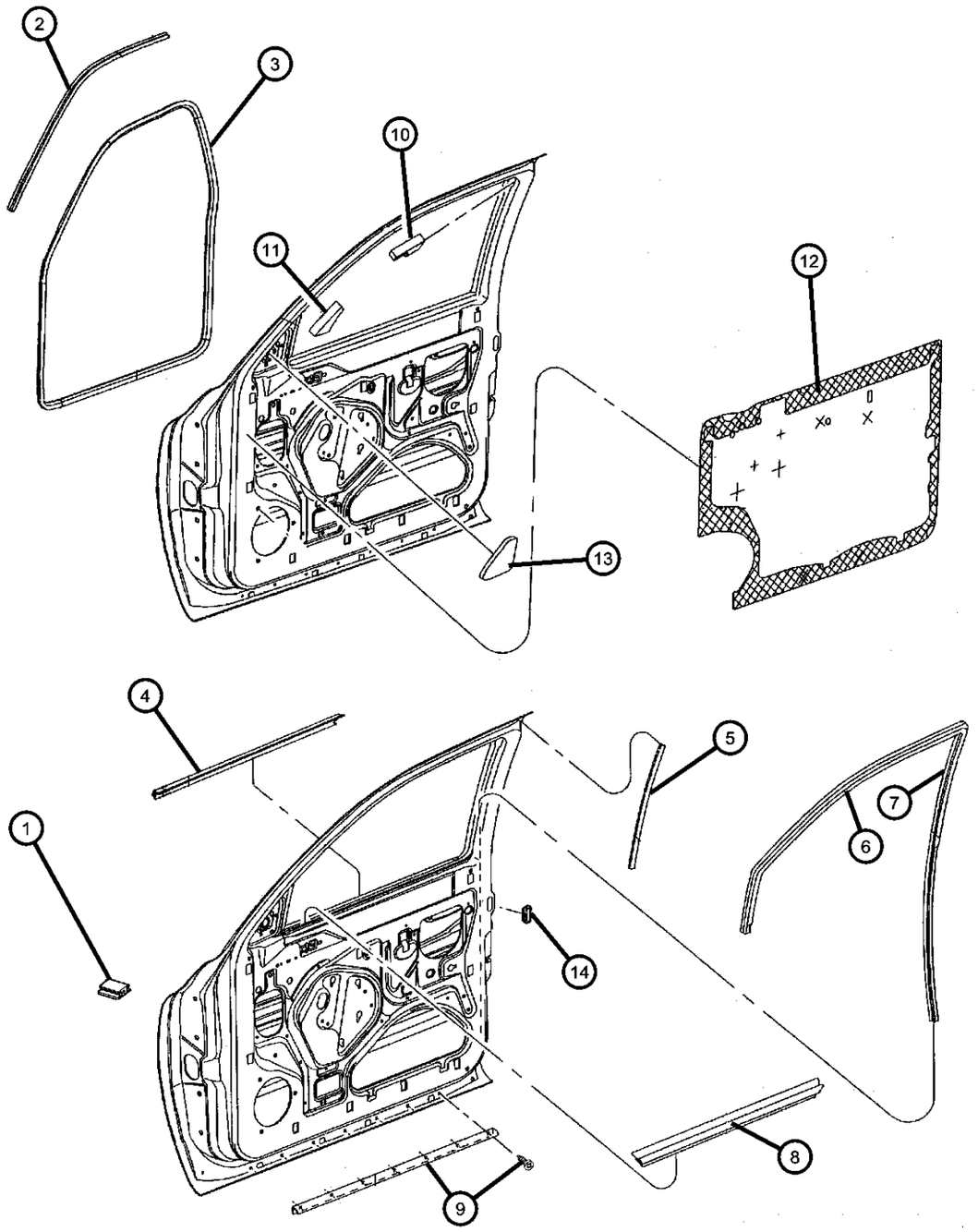

ITEM	PART NUMBER	QTY	LINE	SERIES	BODY	ENGINE	TRANS	TRIM	DESCRIPTION
1									SEAL, A-Pillar
	55257072AA	1							Right
	55257073AA	1							Left
2	55257424AB	2			31, 61				SEAL, Body SideRight, Left
3									SEAL, Front Door
	55255486AC	1			31, 61				Right
	55255487AC	1			31, 61				Left
4									SEAL, Glass Run
	55135308AC	1			31, 61				Right
	55135309AC	1			31, 61				Left
	55256708AD	1			84				Right
	55256709AD	1			84				Left
5	55255667	2							SEAL, B-Pillar
6									SEAL, Front Door Glass Run
	55257400AB	1			31, 61				Right
	55257401AB	1			31, 61				Left
7									SEAL, Glass Run
	55256710AE	1			84				Right
	55256711AE	1			84				Left
8	55255888AD	2			31, 61				SEAL, Glass Run
9									SEAL, Door
	55257238AC	1			84				Right
	55257239AC	1			84				Left
10	55257239AC	1							SEAL, (NOT SERVICED)
11	55257239AC	1							SEAL, (NOT SERVICED)
12									WATERSHIELD, Front Door
	55255104AJ	1			31, 61				Right
	55255105AJ	1			31, 61				Left
13	55257327AC	2							SEAL, Door Mirror BezelRight
14									PLUG, Door
	05257081	2			31, 61				

DAKOTA (AN)

SERIES	LINE	BODY	ENGINE	TRANSMISSION
L = Dakota (All)	1 = Dakota 2WD	61 = Regular Cab (112 WB)	EPE = 2.5L 4 Cylinder	DGK = 4 Speed Automatic 42RE
	5 = Dakota 4WD	31 = Club Cab (131 WB)	EHC = 3.9L 6 Cylinder	DGT = 4 Speed Automatic 46RE
		84 = Quad Cab (131 WB)	EML = 5.0L 8 Cylinder	DDC = 5 Speed HD Manual
			EVA = 4.7L Magnum V8	DDK = 5 Speed HD Manual
			EP0 = All 2.5L	DG4 = Multispeed Automatic 45RFE
			EH0 = All 3.9L	DG0 = All Automatic Transmissions
			EM0 = All 5.9L	DBB = All Manual Transmissions
			EV0 = All 4.7L	

Door, Front Weatherstrips and Seals
Figure DAN-610

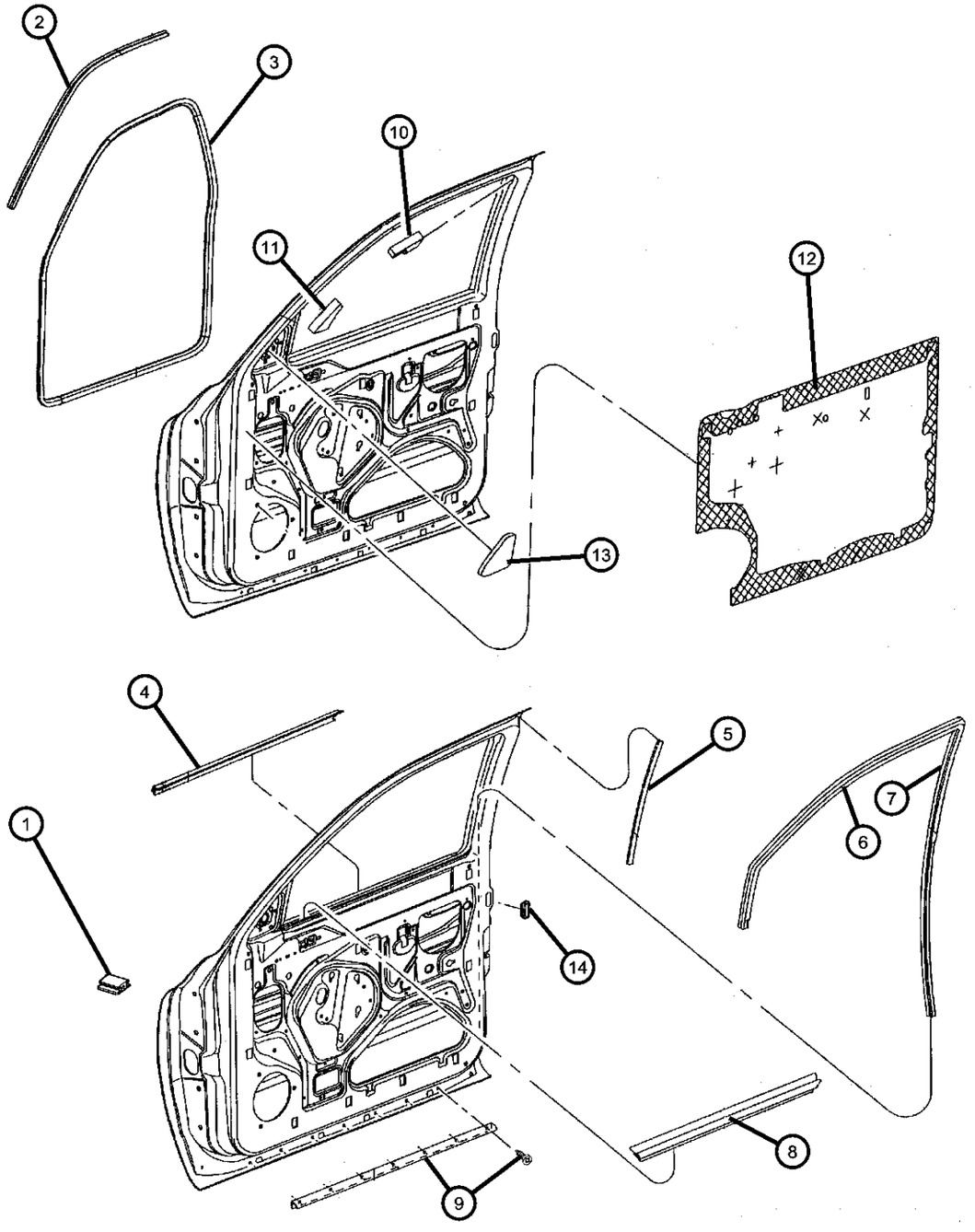

ITEM	PART NUMBER	QTY	LINE	SERIES	BODY	ENGINE	TRANS	TRIM	DESCRIPTION
		4			84				
-15	55257222AA	2			84				RETAINER, Weatherstrip, Drip Seal

DAKOTA (AN)

SERIES	LINE	BODY	ENGINE	TRANSMISSION
L = Dakota (All)	1 = Dakota 2WD	61 = Regular Cab (112 WB)	EPE = 2.5L 4 Cylinder	DGK = 4 Speed Automatic 42RE
	5 = Dakota 4WD	31 = Club Cab (131 WB)	EHC = 3.9L 6 Cylinder	DGT = 4 Speed Automatic 46RE
		84 = Quad Cab (131 WB)	EML = 5.0L 8 Cylinder	DDC = 5 Speed HD Manual
			EVA = 4.7L Magnum V8	DDK = 5 Speed HD Manual
			EP0 = All 2.5L	DG4 = Multispeed Automatic 45RFE
			EH0 = All 3.9L	DG0 = All Automatic Transmissions
			EM0 = All 5.9L	DBB = All Manual Transmissions
			EV0 = All 4.7L	

AR = use ase required - = Non illustrrated part

Door, Rear Weatherstrips and Seals
Figure DAN-620

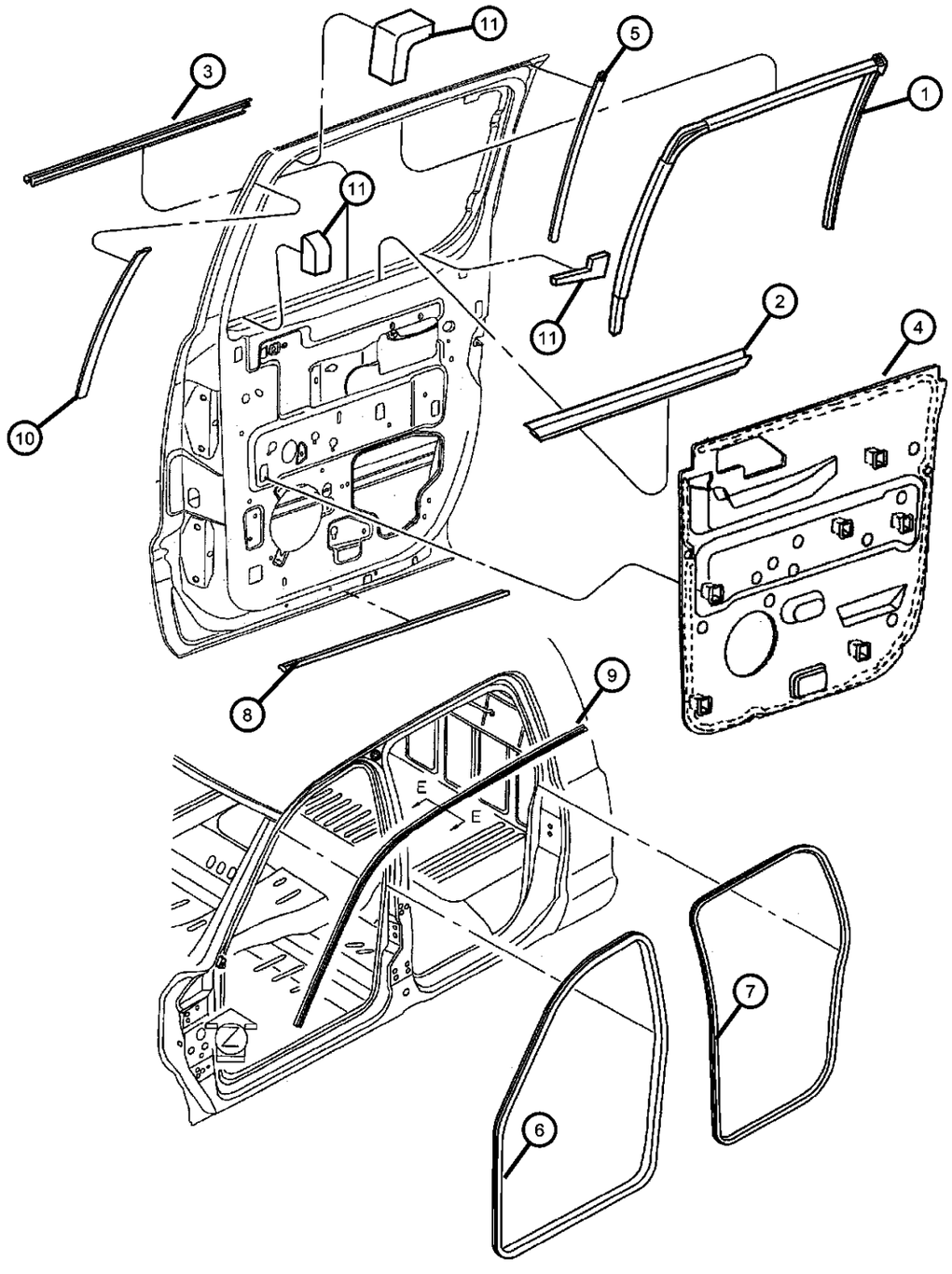

ITEM	PART NUMBER	QTY	LINE	SERIES	BODY	ENGINE	TRANS	TRIM	DESCRIPTION
1									SEAL, Rear Door
	55257186AB	1			84				Right
	55257187AB	1			84				Left
2	55257200AD	2			84				SEAL, Door, Inner
3									SEAL, Rear Door
	55257188AC	1			84				Outer, Right
	55257189AC	1			84				Outer, Left
4									WATERSHIELD, Rear Door
	55257220AB	1			84				Right
	55257221AB	1			84				Left
5	55255667	2			84				SEAL, B-Pillar
6	55362042AB	2			84				SEAL, Front Door
7	55362046AB	2			84				SEAL, Rear Door
8									SEAL, Door
	55257240AB	1			84				Right
	55257241AB	1			84				Left
9	55257218AA	2			84				SEAL, Body Side
10	55257473AC	2			84				SEAL, Door
11	55257473AC	2							FOAM, Air Block, (NOT SERVICED)
-12	55257100AA	2			84				BUMPER, Door
-13	55257222AA	2			84				RETAINER, Weatherstrip, Drip Seal

DAKOTA (AN)

SERIES	LINE	BODY	ENGINE	TRANSMISSION
L = Dakota (All)	1 = Dakota 2WD	61 = Regular Cab (112 WB)	EPE = 2.5L 4 Cylinder	DGK = 4 Speed Automatic 42RE
	5 = Dakota 4WD	31 = Club Cab (131 WB)	EHC = 3.9L 6 Cylinder	DGT = 4 Speed Automatic 46RE
		84 = Quad Cab (131 WB)	EML = 5.0L 8 Cylinder	DDC = 5 Speed HD Manual
			EVA = 4.7L Magnum V8	DDK = 5 Speed HD Manual
			EP0 = All 2.5L	DG4 = Multispeed Automatic 45RFE
			EH0 = All 3.9L	DG0 = All Automatic Transmissions
			EM0 = All 5.9L	DBB = All Manual Transmissions
			EV0 = All 4.7L	

Group - EAN

Exterior Ornamentation

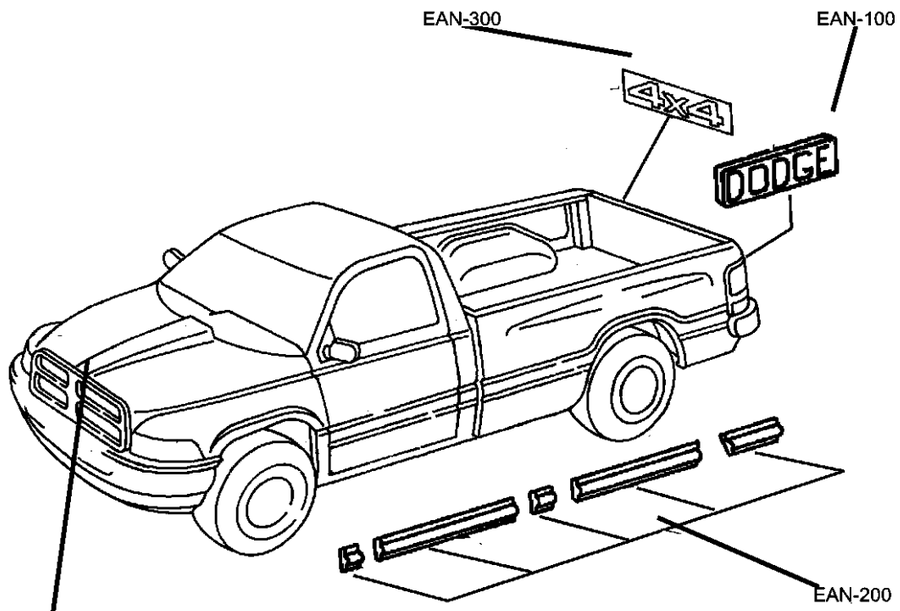

EAN-100

EAN-100 Nameplates	EAN-200 Moldings and Ornamentation	EAN-300 Decals and Tapestripes	
	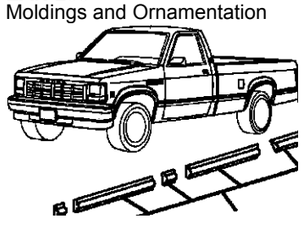	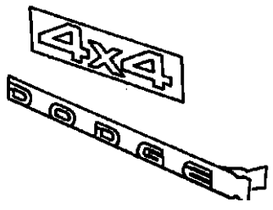	

Group - EAN Exterior Ornamentation

Illustration Title — Group-Fig. No.

Nameplates
Nameplates ..... Fig. EAN - 110

Moldings and Ornamentation
Mouldings ..... Fig. EAN - 210

Decals and Tapestripes
Decals ..... Fig. EAN - 310

Nameplates
Figure EAN-110

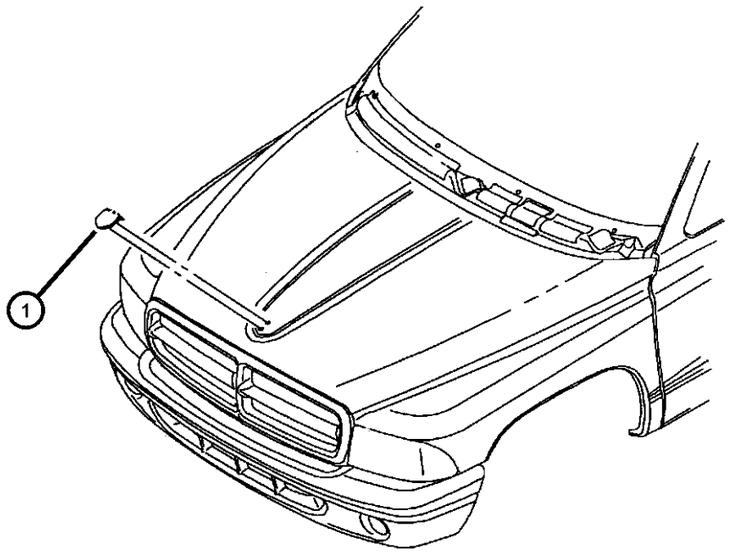

ITEM	PART NUMBER	QTY	LINE	SERIES	BODY	ENGINE	TRANS	TRIM	DESCRIPTION
1									MEDALLION, Hood, Rams Head
	55076512	1							Assembly
	55295240	1							Insert

DAKOTA (AN)

SERIES	LINE	BODY	ENGINE	TRANSMISSION
L = Dakota (All)	1 = Dakota 2WD	61 = Regular Cab (112 WB)	EPE = 2.5L 4 Cylinder	DGK = 4 Speed Automatic 42RE
	5 = Dakota 4WD	31 = Club Cab (131 WB)	EHC = 3.9L 6 Cylinder	DGT = 4 Speed Automatic 46RE
		84 = Quad Cab (131 WB)	EML = 5.0L 8 Cylinder	DDC = 5 Speed HD Manual
			EVA = 4.7L Magnum V8	DDK = 5 Speed HD Manual
			EP0 = All 2.5L	DG4 = Multispeed Automatic 45RFE
			EH0 = All 3.9L	DG0 = All Automatic Transmissions
			EM0 = All 5.9L	DBB = All Manual Transmissions
			EV0 = All 4.7L	

Mouldings
Figure EAN-210

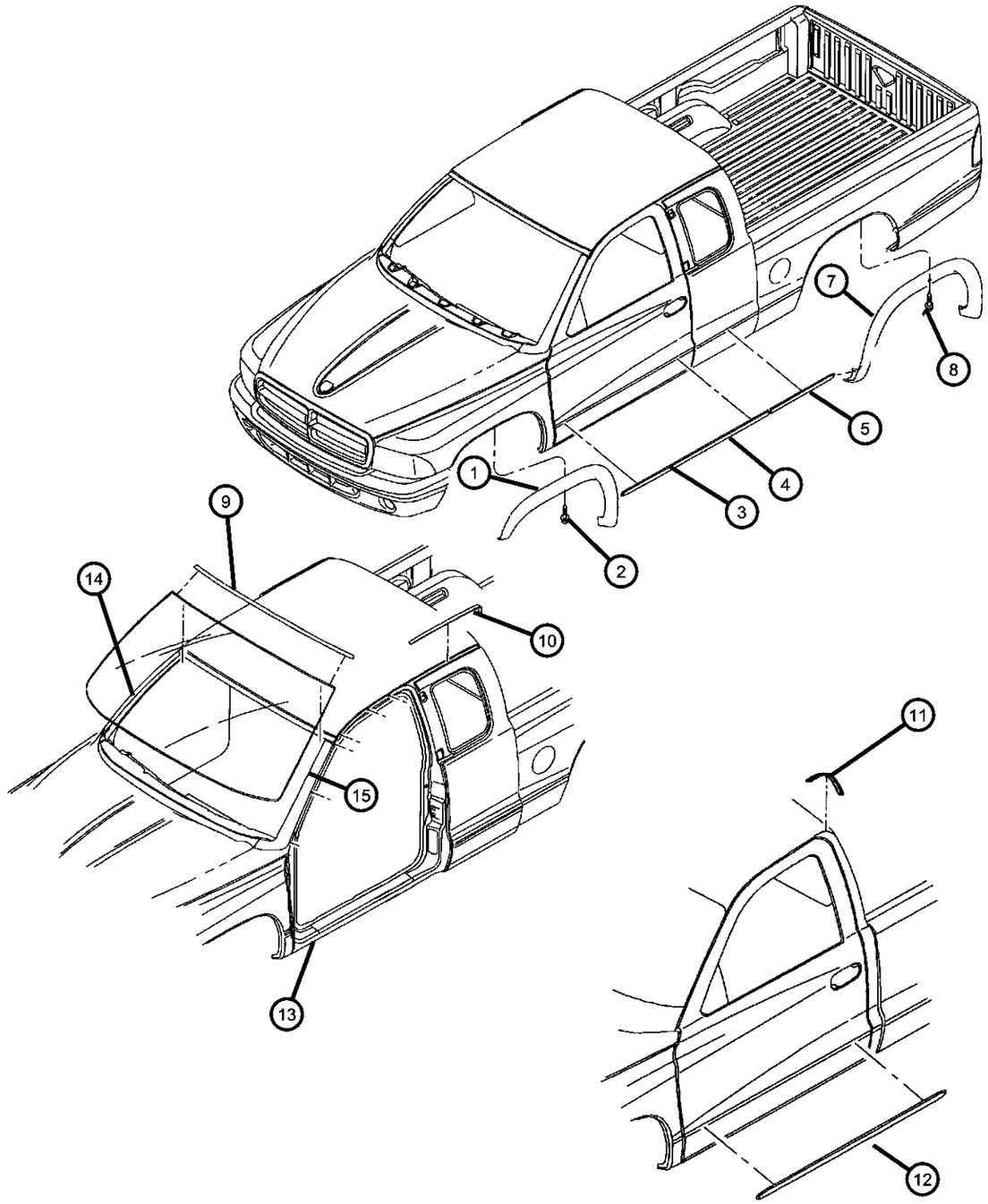

ITEM	PART NUMBER	QTY	LINE	SERIES	BODY	ENGINE	TRANS	TRIM	DESCRIPTION
1									MOLDING, Wheel Opening Flare
	5FJ52DX8AB	1							[K2X], Right
	5FJ52GW7AB	1							[K2W], Right
	5FJ52PR4AB	1							[K2R], Right
	5FJ52SG8AB	1							[K2H], Right
	5FJ52WBTAB	1							[K2K], Right
	5FJ52WSBAB	1							[K2A], Right
	5FJ52XRVAB	1							[K2G], Right
	5FJ52ZBJAB	1							[K2C], Right
	5FJ52ZDRAB	1							[K2D], Right
	5FJ52ZKJAB	1							[K2P], Right
	5FJ53DX8AB	1							[K2X], Left
	5FJ53GW7AB	1							[K2W], Left
	5FJ53PR4AB	1							[K2R], Left
	5FJ53SG8AB	1							[K2H], Left
	5FJ53WBTAB	1							[K2K], Left
	5FJ53WSBAB	1							[K2A], Left
	5FJ53XRVAB	1							[K2G], Left
	5FJ53ZBJAB	1							[K2C], Left
	5FJ53ZDRAB	1							[K2D], Left
	5FJ53ZKJAB	1							[K2P], Left
2	5FJ53ZKJAB	1							SCREW, (NOT SERVICED),
3	5EA54DX9	2			31				MOLDING, Cab
4	5FX95DX9AA	2			84				MOLDING, Front Door
5									MOLDING, Cab
	5EA50DX9	2			61				
	5EA56DX9	2			31				
-6	5FX96DX9AA	2			84				MOLDING, Rear Door, Paint As Required
7									MOLDING, Wheel Opening Flare
	5FJ54DX8AE	1			31, 61				[K2X], Right
	5FJ54GW7AE	1			31, 61				[K2W], Right
	5FJ54PR4AE	1			31, 61				[K2R], Right

DAKOTA (AN)

SERIES	LINE	BODY	ENGINE	TRANSMISSION
L = Dakota (All)	1 = Dakota 2WD	61 = Regular Cab (112 WB)	EPE = 2.5L 4 Cylinder	DGK = 4 Speed Automatic 42RE
	5 = Dakota 4WD	31 = Club Cab (131 WB)	EHC = 3.9L 6 Cylinder	DGT = 4 Speed Automatic 46RE
		84 = Quad Cab (131 WB)	EML = 5.0L 8 Cylinder	DDC = 5 Speed HD Manual
			EVA = 4.7L Magnum V8	DDK = 5 Speed HD Manual
			EP0 = All 2.5L	DG4 = Multispeed Automatic 45RFE
			EH0 = All 3.9L	DG0 = All Automatic Transmissions
			EM0 = All 5.9L	DBB = All Manual Transmissions
			EV0 = All 4.7L	

Mouldings
Figure EAN-210

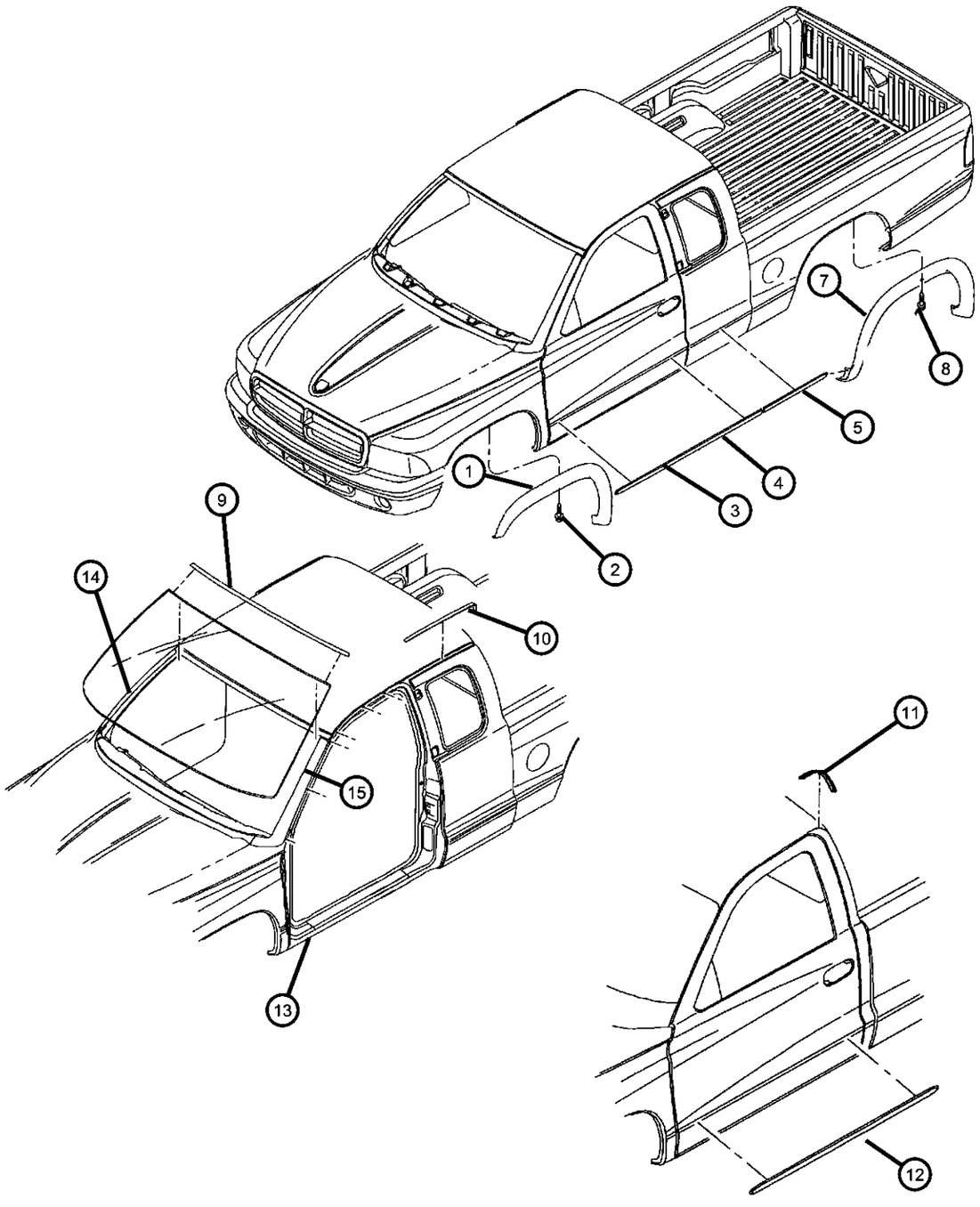

ITEM	PART NUMBER	QTY	LINE	SERIES	BODY	ENGINE	TRANS	TRIM	DESCRIPTION
	5FJ54SG8AE	1			31, 61				[K2H], Right
	5FJ54WBTAE	1			31, 61				[K2K], Right
	5FJ54WSBAE	1			31, 61				[K2A], Right
	5FJ54XRVAE	1			31, 61				[K2G], Right
	5FJ54ZBJAE	1			31, 61				[K2C], Right
	5FJ54ZDRAE	1			31, 61				[K2D], Right
	5FJ54ZKJAE	1			31, 61				[K2P], Right
	5FJ55DX8AE	1			31, 61				[K2X], Left
	5FJ55GW7AE	1			31, 61				[K2W], Left
	5FJ55PR4AE	1			31, 61				[K2R], Left
	5FJ55SG8AE	1			31, 61				[K2H], Left
	5FJ55WBTAE	1			31, 61				[K2K], Left
	5FJ55WSBAE	1			31, 61				[K2A], Left
	5FJ55XRVAE	1			31, 61				[K2G], Left
	5FJ55ZBJAE	1			31, 61				[K2C], Left
	5FJ55ZDRAE	1			31, 61				[K2D], Left
	5FJ55ZKJAE	1			31, 61				[K2P], Left
	5GU76DX8AC	1			84				[K2X], Right
	5GU76GW7AC	1			84				[K2W], Right
	5GU76PR4AC	1			84				[K2R], Right
	5GU76SG8AC	1			84				[K2H], Right
	5GU76WB-TAC	1			84				[K2K], Right
	5GU76WS-BAC	1			84				[K2A], Right
	5GU76XR-VAC	1			84				[K2G], Right
	5GU76ZBJAC	1			84				[K2C], Right
	5GU76ZDRAC	1			84				[K2D], Right
	5GU76ZKJAC	1			84				[K2P], Right
	5GU77DX8AC	1			84				[K2X], Left
	5GU77GW7AC	1			84				[K2W], Left
	5GU77PR4AC	1			84				[K2R], Left
	5GU77SG8AC	1			84				[K2H], Left

DAKOTA (AN)

SERIES	LINE	BODY	ENGINE	TRANSMISSION
L = Dakota (All)	1 = Dakota 2WD	61 = Regular Cab (112 WB)	EPE = 2.5L 4 Cylinder	DGK = 4 Speed Automatic 42RE
	5 = Dakota 4WD	31 = Club Cab (131 WB)	EHC = 3.9L 6 Cylinder	DGT = 4 Speed Automatic 46RE
		84 = Quad Cab (131 WB)	EML = 5.0L 8 Cylinder	DDC = 5 Speed HD Manual
			EVA = 4.7L Magnum V8	DDK = 5 Speed HD Manual
			EP0 = All 2.5L	DG4 = Multispeed Automatic 45RFE
			EH0 = All 3.9L	DG0 = All Automatic Transmissions
			EM0 = All 5.9L	DBB = All Manual Transmissions
			EV0 = All 4.7L	

Mouldings
Figure EAN-210

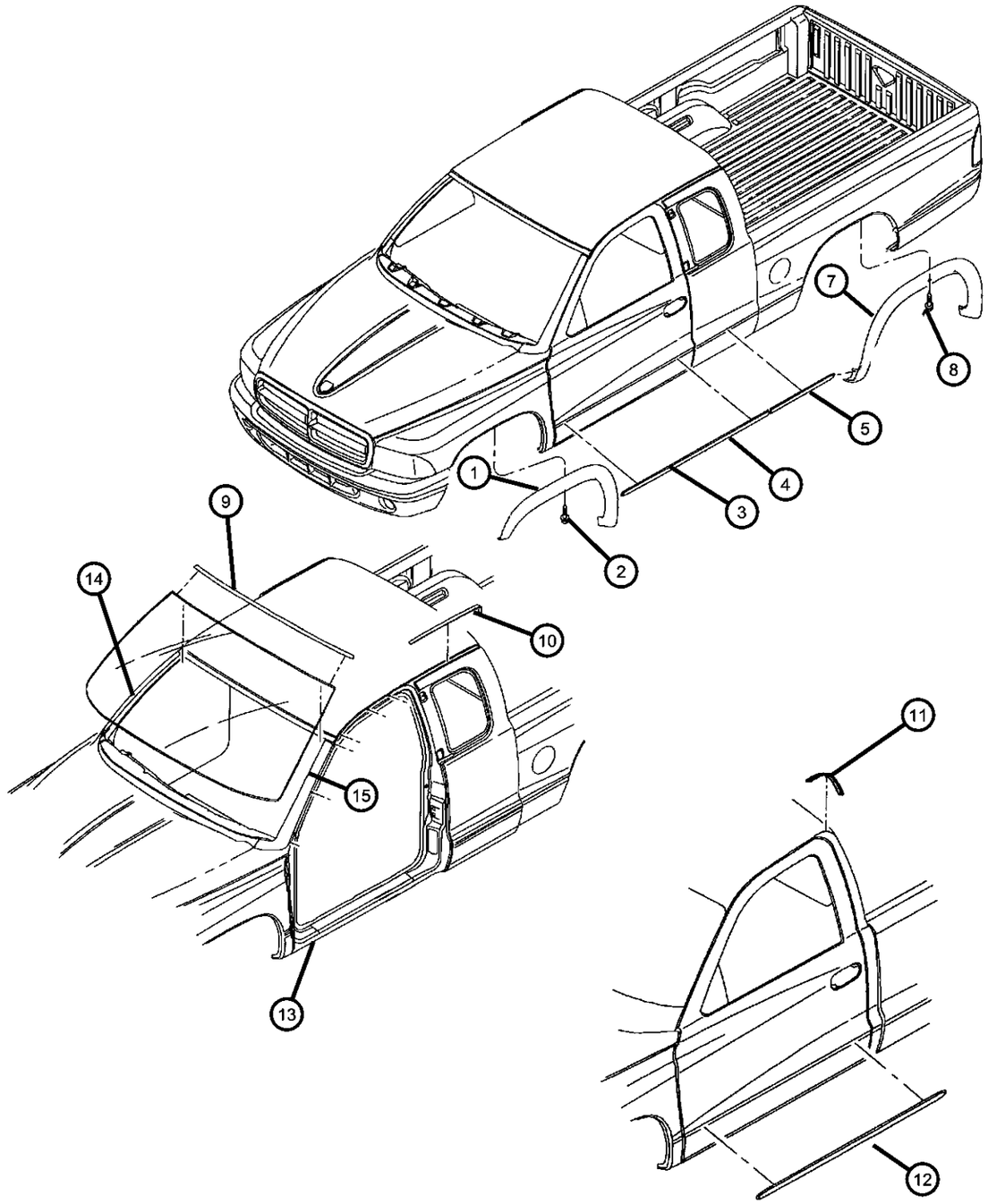

ITEM	PART NUMBER	QTY	LINE	SERIES	BODY	ENGINE	TRANS	TRIM	DESCRIPTION
	5GU77WB-TAC	1			84				[K2K], Left
	5GU77WS-BAC	1			84				[K2A], Left
	5GU77XR-VAC	1			84				[K2G], Left
	5GU77ZBJAC	1			84				[K2C], Left
	5GU77ZDRAC	1			84				[K2D], Left
	5GU77ZKJAC	1			84				[K2P], Left
8	5GU77ZKJAC	1							SCREW, (NOT SERVICED),
9	55255723AD	1							MOLDING, Windshield
10									MOLDING, Roof Joint
	55257094AB	1			31				Right
	55257095AB	1			31				Left
	55257236AA	1			84				Right
	55257237AA	1			84				Left
11									MOLDING, Roof Joint
	55255682AC	1			61				Right
	55255683AC	1			61				Left
	55257094AB	1			31				Right
	55257095AB	1			31				Left
12	5EA54DX9	2			31				MOLDING, Cab
13	5EA54DX9	2							SCREW, Tapping, (NOT SERVICED)
14									MOLDING, Windshield Reveal
	55255732AE	1			31, 61				Right
	55255733AE	1			31, 61				Left
15									MOLDING, Windshield
	55256348AD	1			84				Right
	55256349AD	1			84				Left
-16	55257222AA	2			84				RETAINER, Weatherstrip, Drip Seal

DAKOTA (AN)

SERIES	LINE	BODY	ENGINE	TRANSMISSION
L = Dakota (All)	1 = Dakota 2WD	61 = Regular Cab (112 WB)	EPE = 2.5L 4 Cylinder	DGK = 4 Speed Automatic 42RE
	5 = Dakota 4WD	31 = Club Cab (131 WB)	EHC = 3.9L 6 Cylinder	DGT = 4 Speed Automatic 46RE
		84 = Quad Cab (131 WB)	EML = 5.0L 8 Cylinder	DDC = 5 Speed HD Manual
			EVA = 4.7L Magnum V8	DDK = 5 Speed HD Manual
			EP0 = All 2.5L	DG4 = Multispeed Automatic 45RFE
			EH0 = All 3.9L	DG0 = All Automatic Transmissions
			EM0 = All 5.9L	DBB = All Manual Transmissions
			EV0 = All 4.7L	

Decals
Figure EAN-310

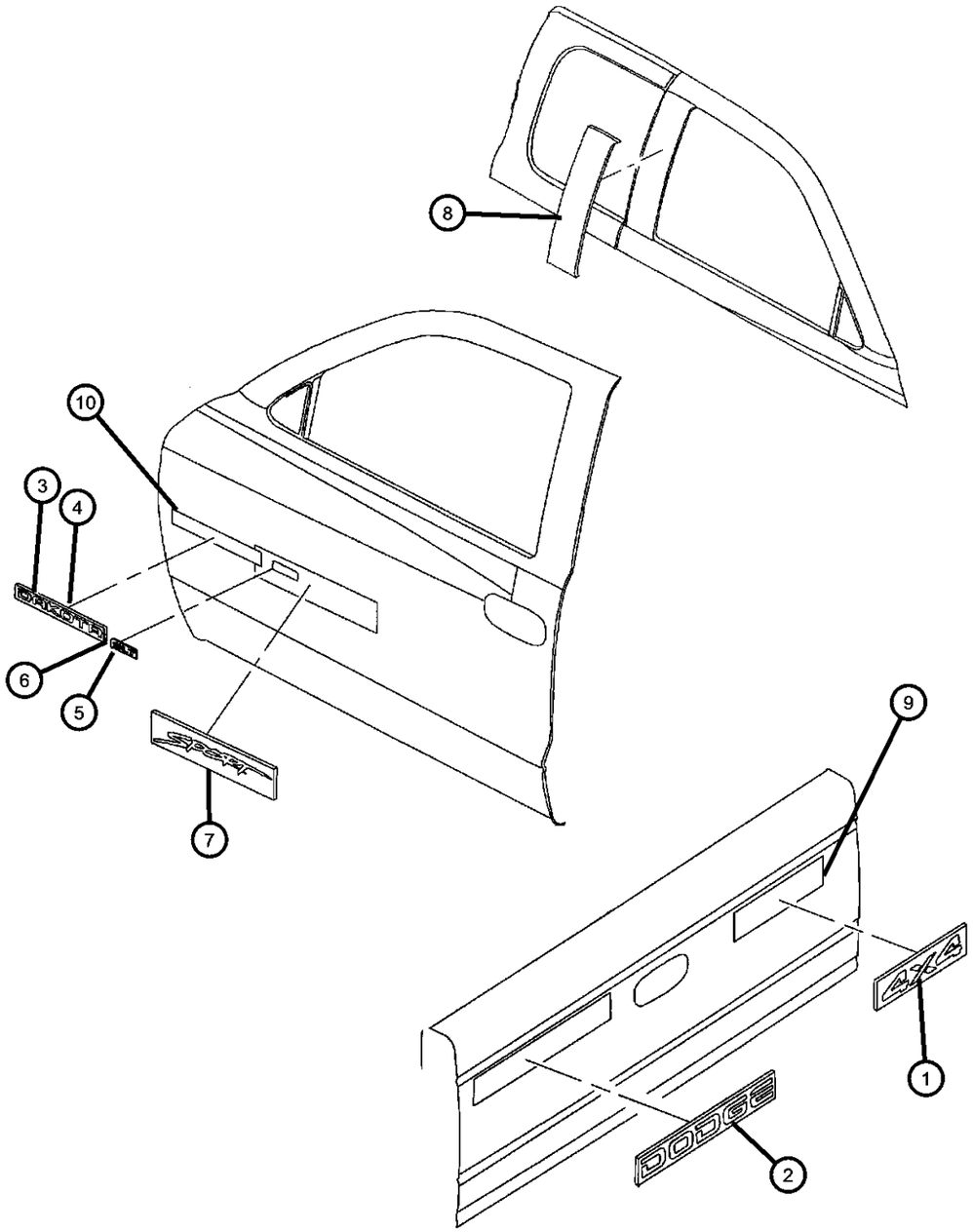

ITEM	PART NUMBER	QTY	LINE	SERIES	BODY	ENGINE	TRANS	TRIM	DESCRIPTION
1									DECAL, 4 x 4
	5DV76PX9	1	5						Black
	5DV76TA1	1	5						Silver
2									DECAL, Dodge
	5DV73PX9	1							Black
	5DV73TA1	1							Silver
3									DECAL, Dakota
	5EW53CA1AB	1							Silver, Left
	5EW53GX9AB	1							Black, Left
	5FM58CA1AB	1							Silver, Right
	5FM58GX9AB	1							Black, Right
4	55076518	2							DECAL, Dakota, Chrome
5	55076431AB	2							DECAL, SLT
6									DECAL, Front Door, SXT
	5JF54CA1AA	2							Silver
	5JF54GX9AA	2							Black
7									DECAL, Sport
	5HK90CA1AA	2							[KSS] [Up To 6-29-01]
	5HK90GX9AA	2							[KSX] [Up To 6-29-01]
	5JF64CA1AA	2							[KSS] [After 6-29-01]
	5JF64GX9AA	2							[KSX] [After 6-29-01]
8									DECAL, Blackout
	55077364AA	1			31				Right
	55077365AA	1			31				Left
9									DECAL, R/T
	5GN13CA1AA	1			31, 61				Silver
	5GN13GX9AA	1			31, 61				Black
10									DECAL, R/T
	5EW59CA1AB	2							Silver
	5EW59GX9AB	2							Black

DAKOTA (AN)

SERIES	LINE	BODY	ENGINE	TRANSMISSION
L = Dakota (All)	1 = Dakota 2WD	61 = Regular Cab (112 WB)	EPE = 2.5L 4 Cylinder	DGK = 4 Speed Automatic 42RE
	5 = Dakota 4WD	31 = Club Cab (131 WB)	EHC = 3.9L 6 Cylinder	DGT = 4 Speed Automatic 46RE
		84 = Quad Cab (131 WB)	EML = 5.0L 8 Cylinder	DDC = 5 Speed HD Manual
			EVA = 4.7L Magnum V8	DDK = 5 Speed HD Manual
			EP0 = All 2.5L	DG4 = Multispeed Automatic 45RFE
			EH0 = All 3.9L	DG0 = All Automatic Transmissions
			EM0 = All 5.9L	DBB = All Manual Transmissions
			EV0 = All 4.7L	

Group - IAN

Interior Trim

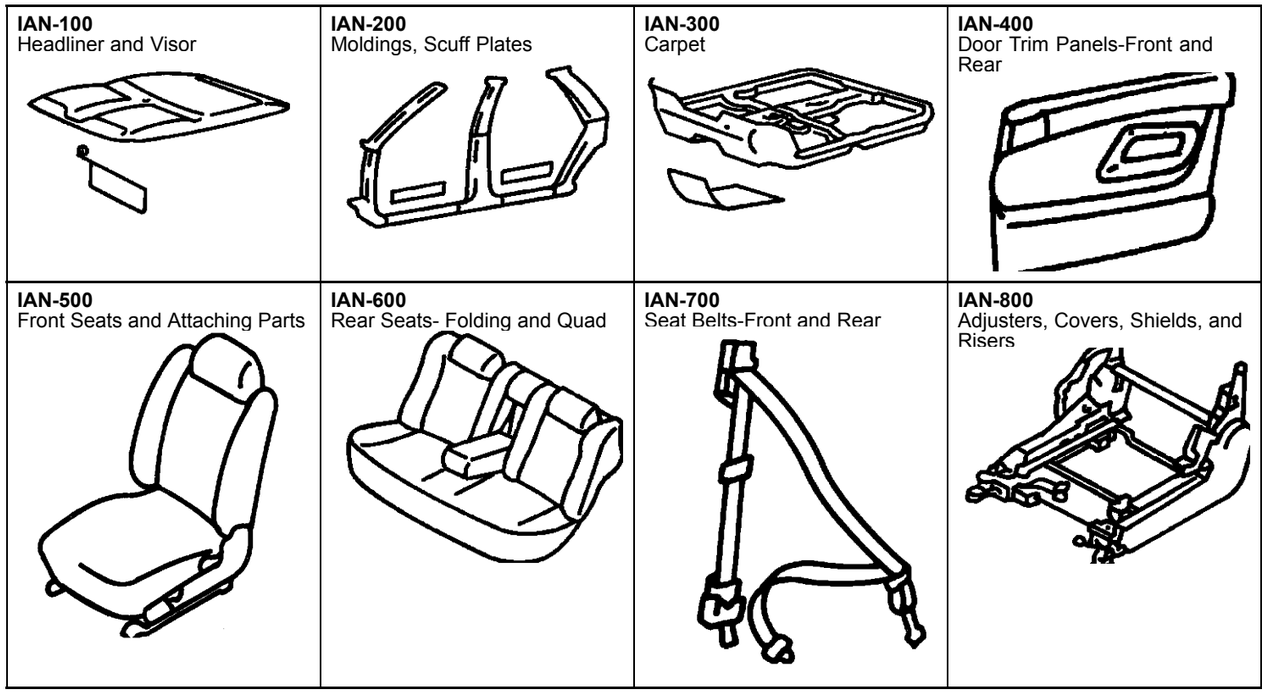

Group - IAN Interior Trim

Illustration Title — Group-Fig. No.

Headliner and Visor
Headliner And Visor ..... Fig. IAN - 110

Moldings, Scuff Plates
A-Pillar, Scuff Plates, Grab Handles, Cab Back ..... Fig. IAN - 210
B-Pillars and C -Pillars ..... Fig. IAN - 220

Carpet
Carpet ..... Fig. IAN - 310
Silencers ..... Fig. IAN - 320

Door Trim Panels-Front and Rear
Front Door Trim Panels ..... Fig. IAN - 410
Rear Door Trim Panels ..... Fig. IAN - 420

Front Seats and Attaching Parts
Seat Front, Full Bench, Trim Codes [A2, G1] Standard Cab ..... Fig. IAN - 510
Seat Front, Split Bench, Trim Code [P9] ..... Fig. IAN - 520
Seat Front, Split Bench, Trim Code [QL] ..... Fig. IAN - 525
Seat, Front, Bucket Seats,Trim Code [K5] ..... Fig. IAN - 530
Seat, Front Bucket, Trim Code [LJ] ..... Fig. IAN - 540

Rear Seats- Folding and Quad
Rear Seat And Attaching Parts Trim Code P9, K5 ..... Fig. IAN - 610
Rear Seat, Quad Cab ..... Fig. IAN - 620

Seat Belts-Front and Rear
Belts, Front Seat, Standard & Club Cabs ..... Fig. IAN - 710
Belts, Front Seat, 4 Door ..... Fig. IAN - 715
Belts, Rear Seat and Tethers ..... Fig. IAN - 720

Adjusters, Covers, Shields, and Risers
Adjuster And Attaching Parts ..... Fig. IAN - 810
Handles, Lock Bar And Attaching Parts ..... Fig. IAN - 820

Headliner And Visor
Figure IAN-110

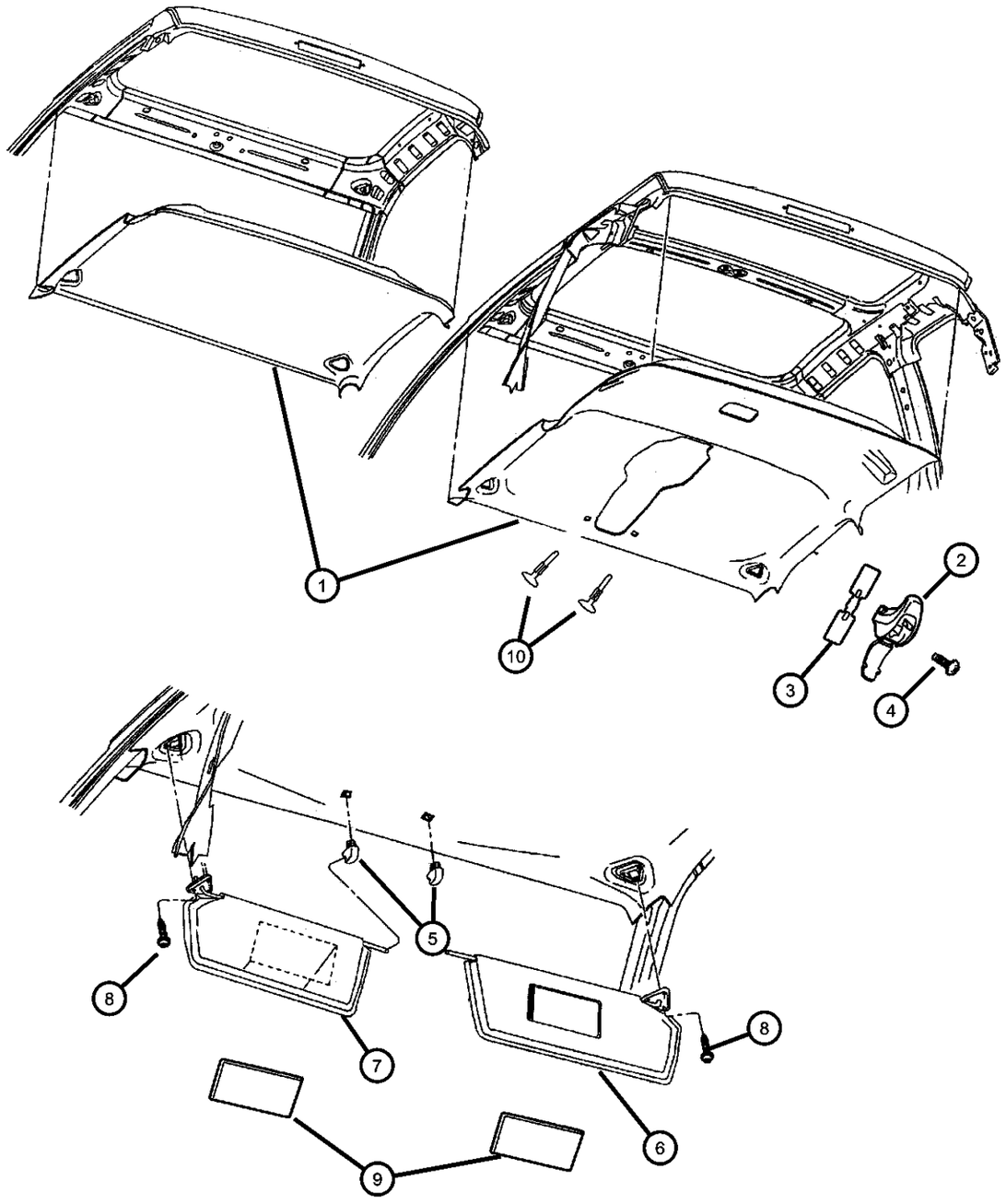

ITEM	PART NUMBER	QTY	LINE	SERIES	BODY	ENGINE	TRANS	TRIM	DESCRIPTION
1									HEADLINER
	5HX36TL2AB	1			61			*O0	Without Overhead Console
	5HX37TL2AB	1			31			*O0	Without Overhead Console
	5HX38TL2AB	1			61			*O0	With Overhead Console
	5HX39TL2AB	1			31			*O0	With Overhead Console
	5HX40TL2AC	1			84			*O0	
2									HOOK, Coat
	5GU22TL2AA	2			61			*O0	
		2			31			*O0	
3									CLIP, Pinch Top
	04647896	2			61			*O0	
		2			31			*O0	
4									SCREW, .164-18x.75
	06035324	2			61			*O0	
		2			31			*O0	
5	5GE11TL2AA	2						*O0	SUPPORT, Visor
6	5HW64TL2AA	1						*O0	VISOR, W/Mirror
7	5GE13TL2AE	1						*O0	VISOR
8	00153832	4							SCREW, .190-16x1.00
9									LABEL, Air Bag Warning
	04787437AA	2			84				CANADA
	55350848AA	2			31, 61				CANADA
10	06506624AA	2			31, 84				PUSH PIN

DAKOTA (AN)

SERIES	LINE	BODY	ENGINE	TRANSMISSION
L = Dakota (All)	1 = Dakota 2WD	61 = Regular Cab (112 WB)	EPE = 2.5L 4 Cylinder	DGK = 4 Speed Automatic 42RE
	5 = Dakota 4WD	31 = Club Cab (131 WB)	EHC = 3.9L 6 Cylinder	DGT = 4 Speed Automatic 46RE
		84 = Quad Cab (131 WB)	EML = 5.0L 8 Cylinder	DDC = 5 Speed HD Manual
			EVA = 4.7L Magnum V8	DDK = 5 Speed HD Manual
			EP0 = All 2.5L	DG4 = Multispeed Automatic 45RFE
			EH0 = All 3.9L	DG0 = All Automatic Transmissions
			EM0 = All 5.9L	DBB = All Manual Transmissions
			EV0 = All 4.7L	

A-Pillar, Scuff Plates, Grab Handles, Cab Back
Figure IAN-210

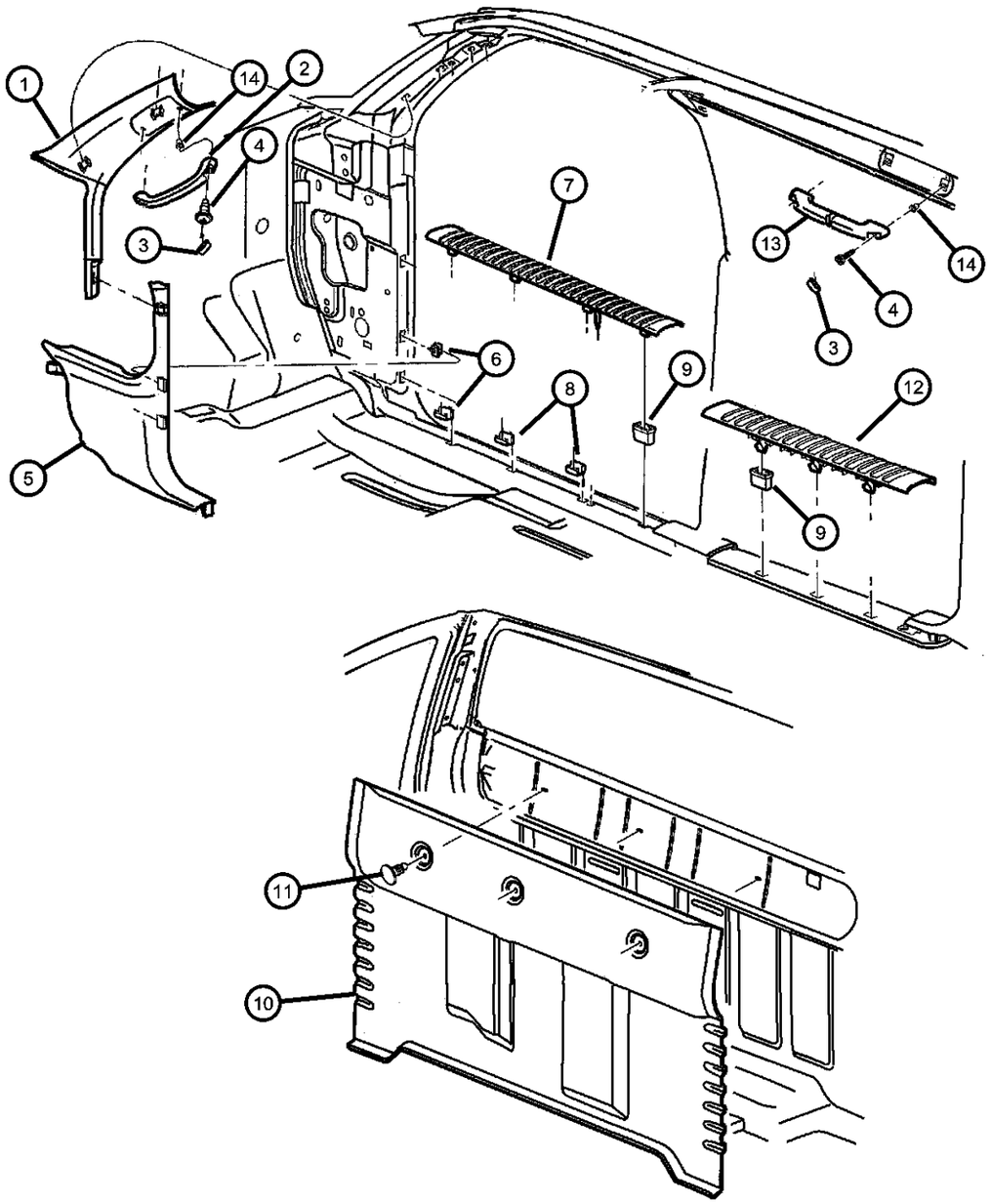

ITEM	PART NUMBER	QTY	LINE	SERIES	BODY	ENGINE	TRANS	TRIM	DESCRIPTION
1									MOLDING, A-PILLAR
	5HD40TL2AB	1						*O0	Right
	5HD41TL2AB	1						*O0	Left
2	5GU40TL2AA	1						*O0	HANDLE, Roof Grab, A-Pillar
3	0H526TL2	4			84			*O0	PLUG, Assist and Grab Handle
4	06504432	4							SCREW, Pan Head, M6-1.00x29.00
5									PANEL, Cowl Side Trim
	5HD42WL5AC	1						*O0	[L5], Right
	5HD42XD-VAC	1						*O0	[DV], Right
	5HD43WL5AB	1						*O0	[L5], Left
	5HD43XDVAB	1						*O0	[DV], Left
6	55361001AC	AR			84				CLIP, Trim Panel
7									PLATE, Scuff
	5FH12WL5AC	2			84			*O0	[L5], Right & Left
	5FH12XDVAC	2			84			*O0	[DV], Right & Left
	5GH18WL5AA	1			31, 61			*O0	[L5], Right
	5GH18XD-VAA	1			31, 61			*O0	[DV], Right
	5GH19WL5AA	1			31, 61			*O0	[L5], Left
	5GH19XD-VAA	1			31, 61			*O0	[DV], Left
8	55216638	6			31, 61				CLIP, Trim Panel
9	06505621AA	14			84				NUT, Push In
10									CARPET, Cab Back Panel
	5GD19WL5AC	1			84			*O0	[L5]
	5GD19XD-VAC	1			84			*O0	[DV]
	5GT33WL5AB	1			61			*O0	[L5]
	5GT33XDVAB	1			61			*O0	[DV]
11									FASTENER, Trim Panel Attaching
	5GW34WL8AA	1			61			*O0	[L5]
	5GW34XD-VAA	1			61			*O0	[DV]
12									PLATE, Scuff

DAKOTA (AN)

SERIES	LINE	BODY	ENGINE	TRANSMISSION
L = Dakota (All)	1 = Dakota 2WD	61 = Regular Cab (112 WB)	EPE = 2.5L 4 Cylinder	DGK = 4 Speed Automatic 42RE
	5 = Dakota 4WD	31 = Club Cab (131 WB)	EHC = 3.9L 6 Cylinder	DGT = 4 Speed Automatic 46RE
		84 = Quad Cab (131 WB)	EML = 5.0L 8 Cylinder	DDC = 5 Speed HD Manual
			EVA = 4.7L Magnum V8	DDK = 5 Speed HD Manual
			EP0 = All 2.5L	DG4 = Multispeed Automatic 45RFE
			EH0 = All 3.9L	DG0 = All Automatic Transmissions
			EM0 = All 5.9L	DBB = All Manual Transmissions
			EV0 = All 4.7L	

AR = use ase required - = Non illustrrated part

A-Pillar, Scuff Plates, Grab Handles, Cab Back
Figure IAN-210

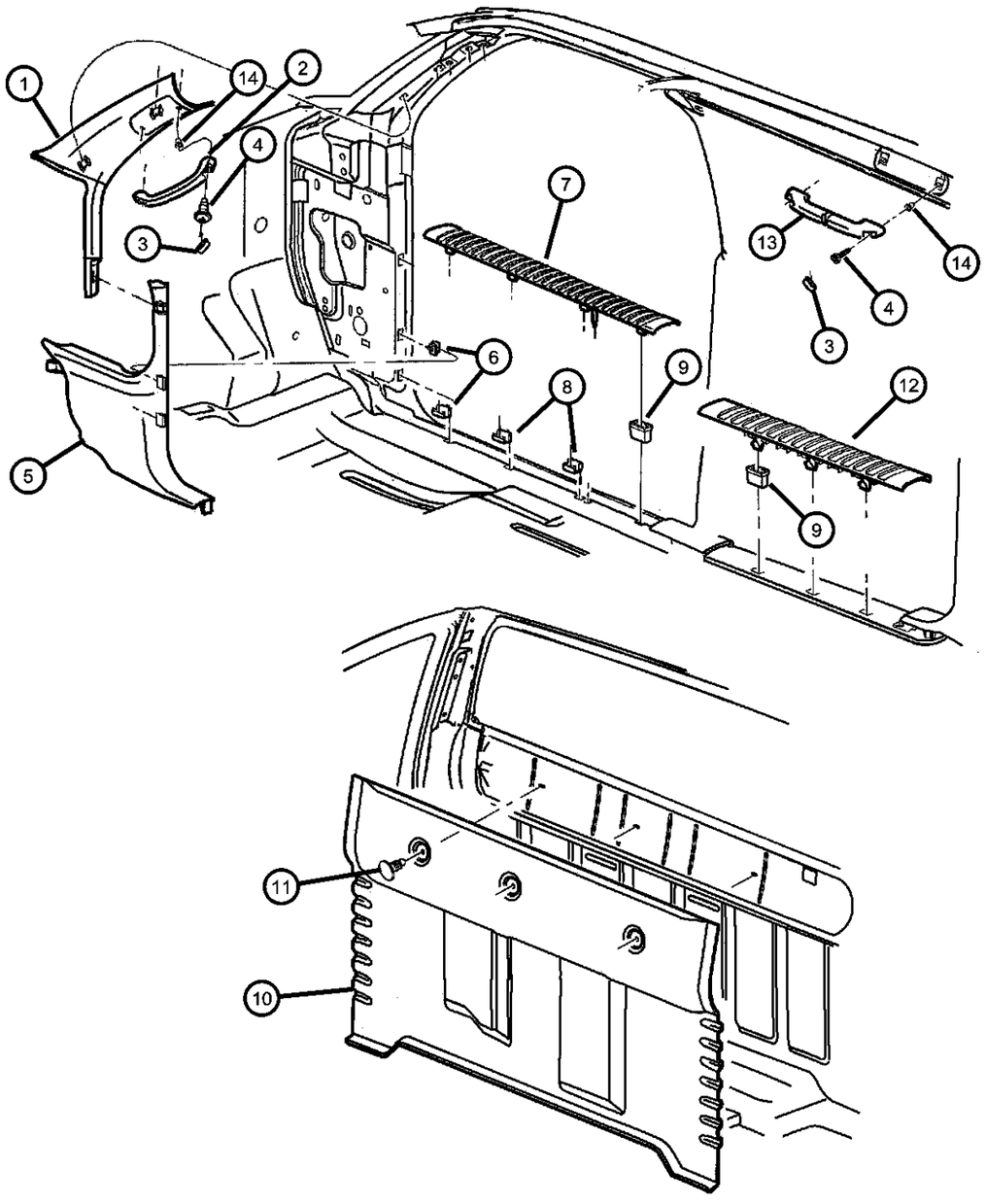

ITEM	PART NUMBER	QTY	LINE	SERIES	BODY	ENGINE	TRANS	TRIM	DESCRIPTION
	5GC80WL5AA	2			84			*O0	[L5]
	5GC80XD-VAA	2			84			*O0	[DV]
13	5GN70TL2AB	2			84			*O0	HANDLE, Roof Grab
14	06507161AA	4							NUT

DAKOTA (AN)

SERIES	LINE	BODY	ENGINE	TRANSMISSION
L = Dakota (All)	1 = Dakota 2WD	61 = Regular Cab (112 WB)	EPE = 2.5L 4 Cylinder	DGK = 4 Speed Automatic 42RE
	5 = Dakota 4WD	31 = Club Cab (131 WB)	EHC = 3.9L 6 Cylinder	DGT = 4 Speed Automatic 46RE
		84 = Quad Cab (131 WB)	EML = 5.0L 8 Cylinder	DDC = 5 Speed HD Manual
			EVA = 4.7L Magnum V8	DDK = 5 Speed HD Manual
			EP0 = All 2.5L	DG4 = Multispeed Automatic 45RFE
			EH0 = All 3.9L	DG0 = All Automatic Transmissions
			EM0 = All 5.9L	DBB = All Manual Transmissions
			EV0 = All 4.7L	

B-Pillars and C -Pillars
Figure IAN-220

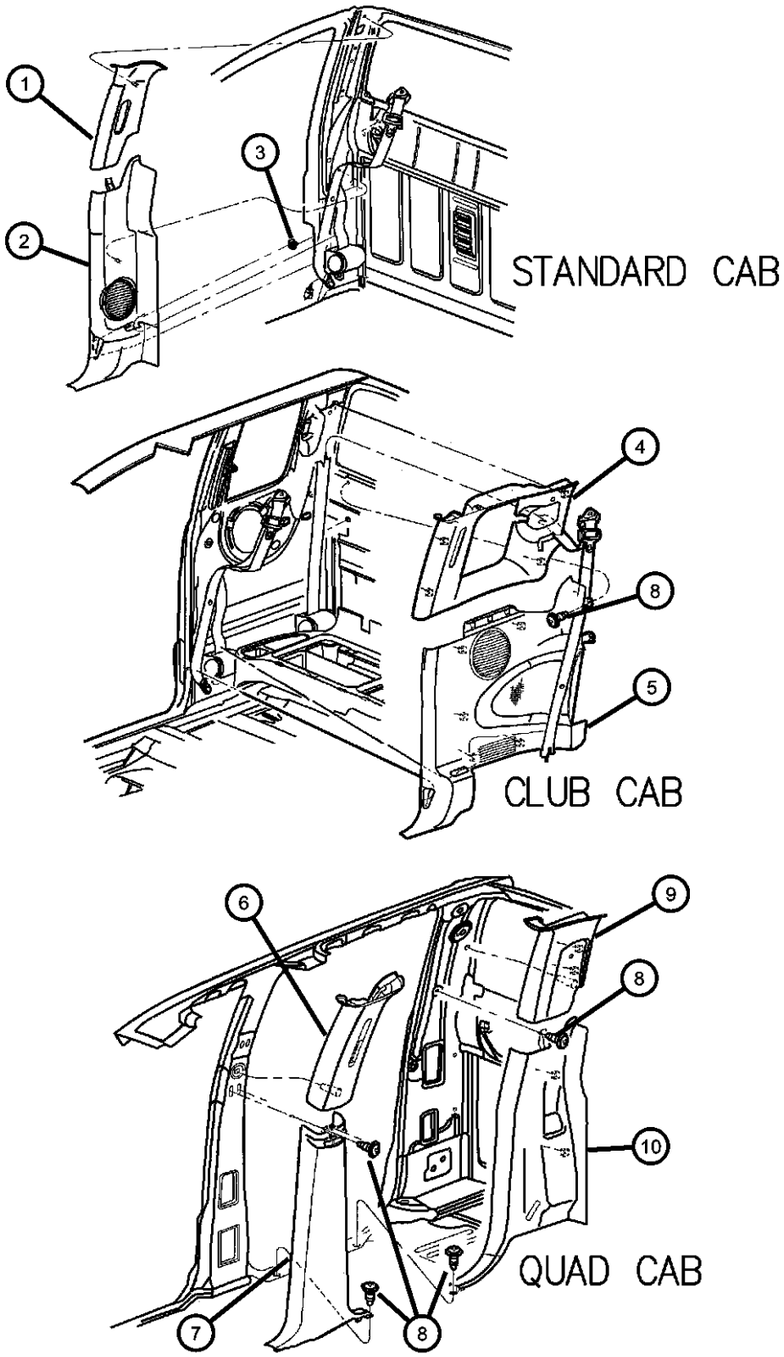

ITEM	PART NUMBER	QTY	LINE	SERIES	BODY	ENGINE	TRANS	TRIM	DESCRIPTION
1									PANEL, B Pillar Upper Trim
	5GJ12TL2AB	1			61			*O0	Right
	5GJ13TL2AB	1			61			*O0	Left
2									PANEL, B Pillar Lower Trim
	5GH42WL5AB	1			61			*O0	[L5], Right
	5GH42XDVAB	1			61			*O0	[DV], Right
	5GH43WL5AB	1			61			*O0	[L5], Left
	5GH43XDVAB	1			61			*O0	[DV], Left
3	55350789AA	2			61				CLIP, Trim
4									PANEL, Quarter Trim
	5GH44TL2AA	1			31			*O0	Right
	5GH45TL2AA	1			31			*O0	Left
5									PANEL, Quarter Trim
	5GH46WL5AA	1			31			*O0	[L5], With Cloth Bolster, Up to 6/24/02, Right
	5GH46XD-VAA	1			31			*O0	[DV], With Cloth Bolster, Up to 6/24/02, Right
	5GH47WL5AA	1			31			*O0	[L5], With Cloth Bolster, Up to 6/24/02, Left
	5GH47XD-VAA	1			31			*O0	[DV], With Cloth Bolster, Up to 6/24/02, Left
	5JL06WL5AA	1			31			*O0	[L5], Without Cloth Bolster, After 6/24/02, Right
	5JL06XDVAA	1			31			*O0	[DV], Without Cloth Bolster, After 6/24/02, Right
	5JL07WL5AA	1			31			*O0	[L5], Without Cloth Bolster, After 6/24/02, Left
	5JL07XDVAA	1			31			*O0	[DV], Without Cloth Bolster, After 6/24/02, Left
6									PANEL, B Pillar Upper Trim
	5GC86TL2AC	1			84			*O0	Right
	5GC87TL2AC	1			84			*O0	Left
7									PANEL, B Pillar
	5GS38WL5AA	1			84			*O0	[L5], Right
	5GS38XDVAA	1			84			*O0	[DV], Right
	5GS39WL5AA	1			84			*O0	[L5], Left
	5GS39XDVAA	1			84			*O0	[DV], Left

DAKOTA (AN)

SERIES	LINE	BODY	ENGINE	TRANSMISSION
L = Dakota (All)	1 = Dakota 2WD	61 = Regular Cab (112 WB)	EPE = 2.5L 4 Cylinder	DGK = 4 Speed Automatic 42RE
	5 = Dakota 4WD	31 = Club Cab (131 WB)	EHC = 3.9L 6 Cylinder	DGT = 4 Speed Automatic 46RE
		84 = Quad Cab (131 WB)	EML = 5.0L 8 Cylinder	DDC = 5 Speed HD Manual
			EVA = 4.7L Magnum V8	DDK = 5 Speed HD Manual
			EP0 = All 2.5L	DG4 = Multispeed Automatic 45RFE
			EH0 = All 3.9L	DG0 = All Automatic Transmissions
			EM0 = All 5.9L	DBB = All Manual Transmissions
			EV0 = All 4.7L	

B-Pillars and C -Pillars
Figure IAN-220

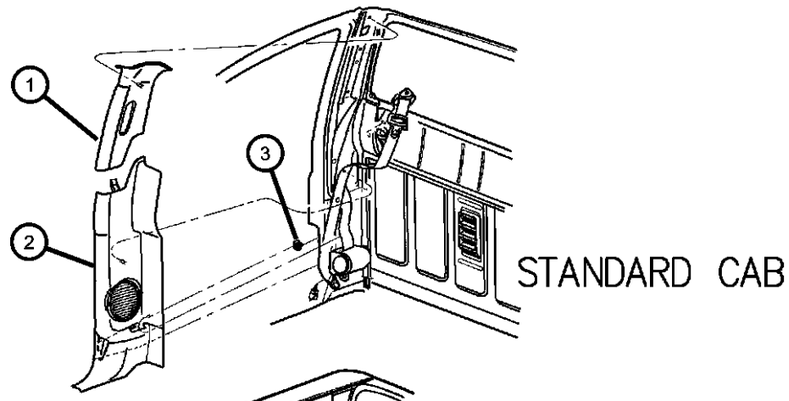

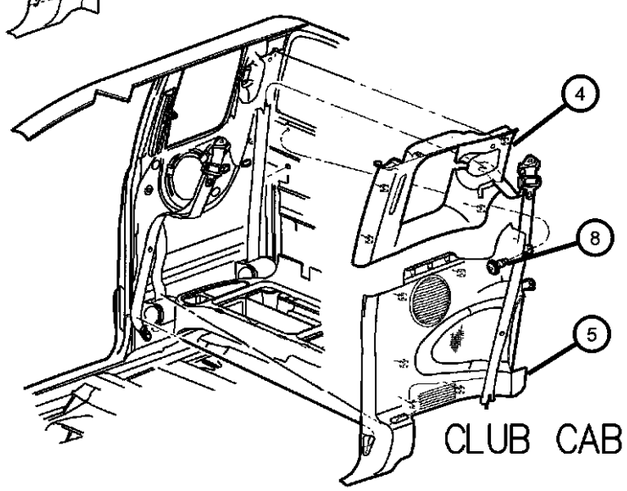

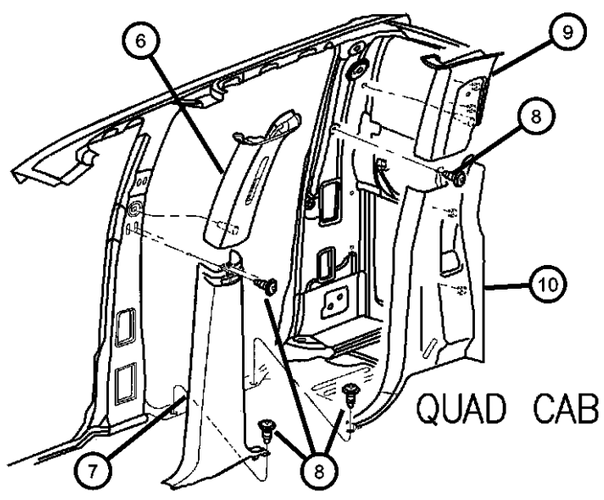

ITEM	PART NUMBER	QTY	LINE	SERIES	BODY	ENGINE	TRANS	TRIM	DESCRIPTION
8									SCREW, Round Head, .164-18x.560
	J4004642	4			84				
		4			31				
9									PANEL, C Pillar
	5GC90TL2AC	1			84			*O0	Right
	5GC91TL2AC	1			84			*O0	Left
10									PANEL, C Pillar
	5GC92WL5AB	1			84			*O0	[L5], Right
	5GC92XDVAB	1			84			*O0	[DV], Right
	5GC93WL5AB	1			84			*O0	[L5], Left
	5GC93XDVAB	1			84			*O0	[DV], Left

DAKOTA (AN)

SERIES	LINE	BODY	ENGINE	TRANSMISSION
L = Dakota (All)	1 = Dakota 2WD	61 = Regular Cab (112 WB)	EPE = 2.5L 4 Cylinder	DGK = 4 Speed Automatic 42RE
	5 = Dakota 4WD	31 = Club Cab (131 WB)	EHC = 3.9L 6 Cylinder	DGT = 4 Speed Automatic 46RE
		84 = Quad Cab (131 WB)	EML = 5.0L 8 Cylinder	DDC = 5 Speed HD Manual
			EVA = 4.7L Magnum V8	DDK = 5 Speed HD Manual
			EP0 = All 2.5L	DG4 = Multispeed Automatic 45RFE
			EH0 = All 3.9L	DG0 = All Automatic Transmissions
			EM0 = All 5.9L	DBB = All Manual Transmissions
			EV0 = All 4.7L	

Carpet
Figure IAN-310

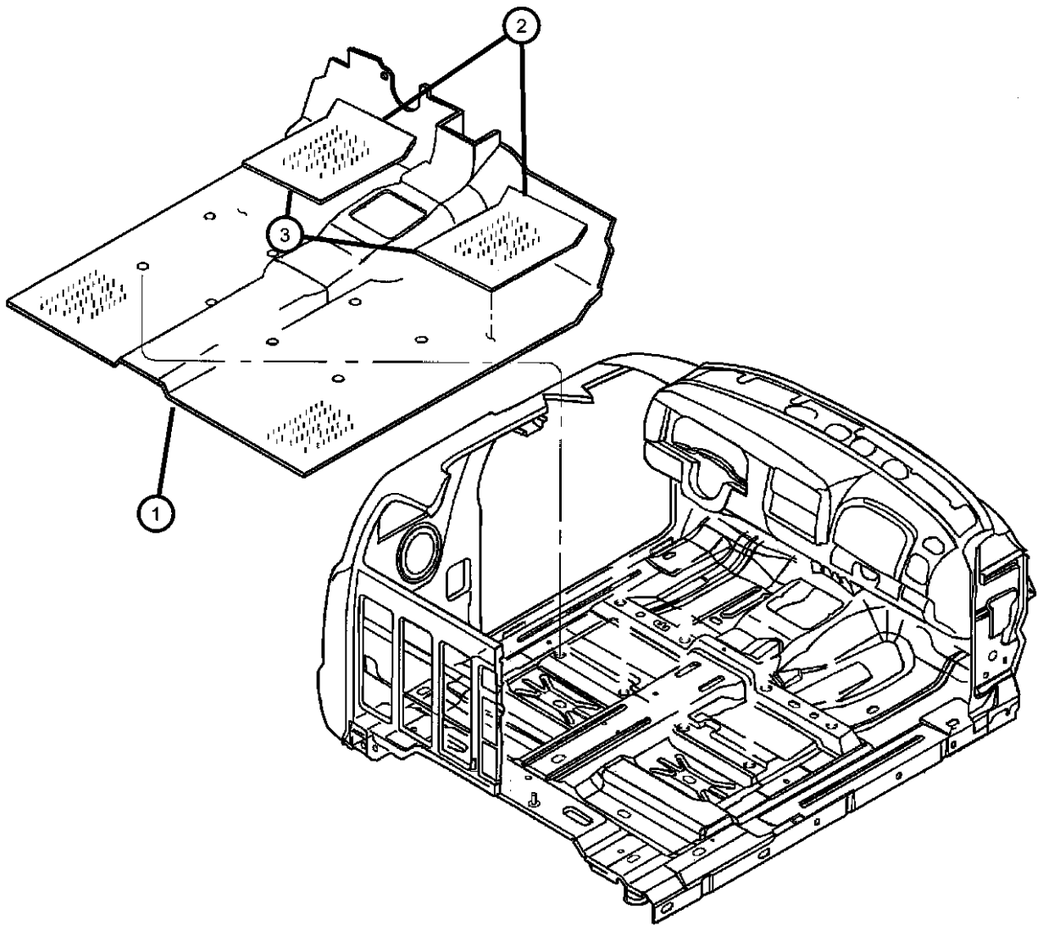

ITEM	PART NUMBER	QTY	LINE	SERIES	BODY	ENGINE	TRANS	TRIM	DESCRIPTION
1									CARPET, Floor
	5GW25WL8AC	1			84			*O0	[L5], Up to 1/22/02
	5GW25XD-VAC	1			84			*O0	[DV], Up to 1/22/02
	5GW25WL8AD	1			84			*O0	[L5], After 1/22/02
	5GW25XD-VAD	1			84			*O0	[DV], After 1/22/02
	5GW26WL8AD	1			61			*O0	[L5]
	5GW26XD-VAD	1			61			*O0	[DV]
	5GW27WL8AD	1			31			*O0	[L5]
	5GW27XD-VAD	1			31			*O0	[DV]
2	5GW24DX9AD	1			61			*O0	MAT, Floor, Black
3									MAT KIT, Floor - Front
	5GC31WL8AA	1			31, 61			*O0	[L5]
	5GC31XD-VAA	1			31, 61			*O0	[DV]

DAKOTA (AN)

SERIES	LINE	BODY	ENGINE	TRANSMISSION
L = Dakota (All)	1 = Dakota 2WD	61 = Regular Cab (112 WB)	EPE = 2.5L 4 Cylinder	DGK = 4 Speed Automatic 42RE
	5 = Dakota 4WD	31 = Club Cab (131 WB)	EHC = 3.9L 6 Cylinder	DGT = 4 Speed Automatic 46RE
		84 = Quad Cab (131 WB)	EML = 5.0L 8 Cylinder	DDC = 5 Speed HD Manual
			EVA = 4.7L Magnum V8	DDK = 5 Speed HD Manual
			EP0 = All 2.5L	DG4 = Multispeed Automatic 45RFE
			EH0 = All 3.9L	DG0 = All Automatic Transmissions
			EM0 = All 5.9L	DBB = All Manual Transmissions
			EV0 = All 4.7L	

Silencers
Figure IAN-320

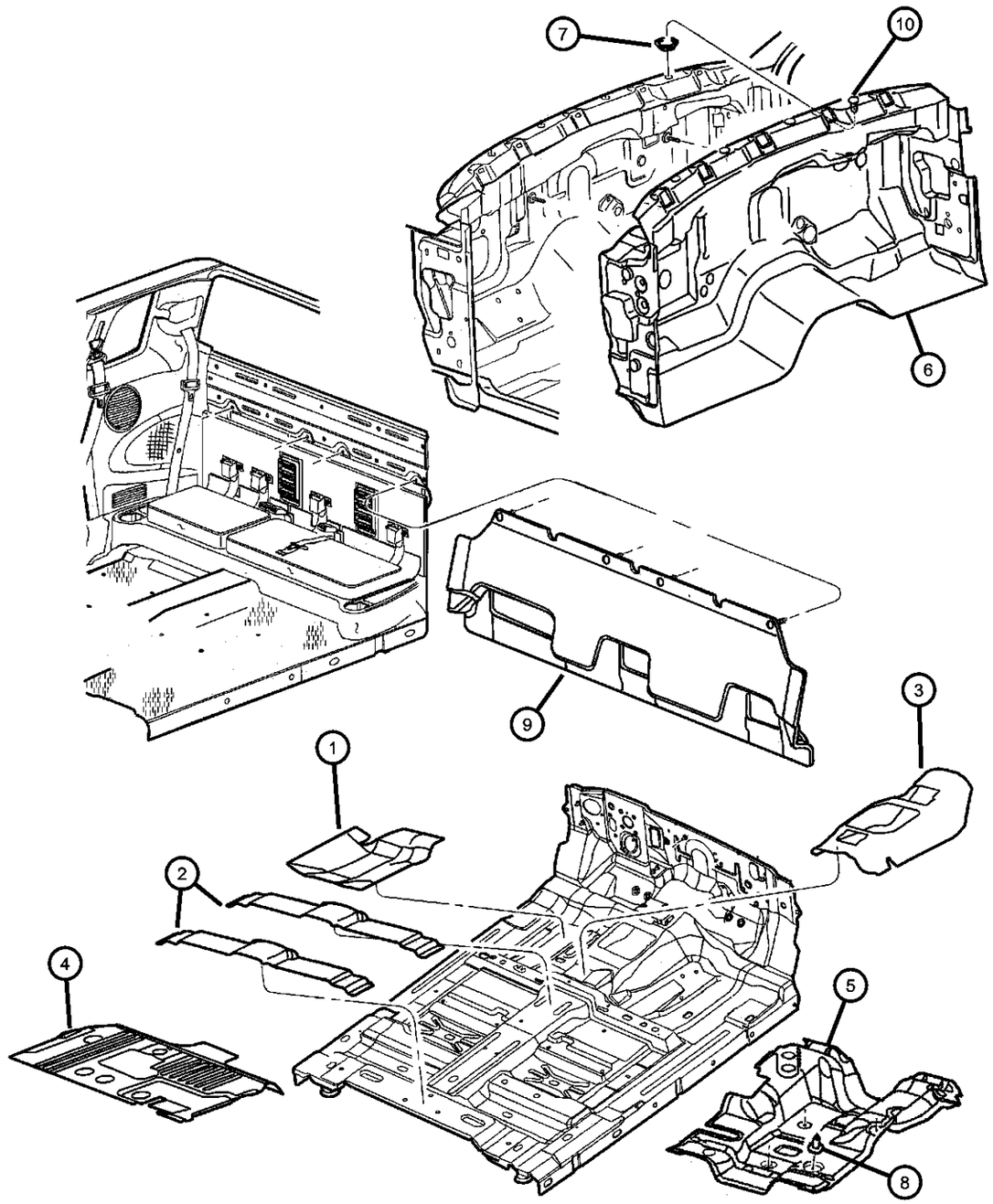

ITEM	PART NUMBER	QTY	LINE	SERIES	BODY	ENGINE	TRANS	TRIM	DESCRIPTION
Sales Code [EVA] = Next Generation 4.7L Magnum V8									
1	55361064AA	2							SILENCER, Floor Pan Front TunnelRight And Left
2	55255328AC	1							SILENCER, Floor Pan
3	55361103AB	1							SILENCER, Floor Pan Front Tunnel
4									SILENCER, Floor Pan Front Tunnel
	55361074AB	1			84				Right
	55361075AA	1			84				Left
5									SILENCER, Floor Pan Front Tunnel
	55361058AE	1							With Sales Code [EVA], Up to 1/28/02
	55361058AG	1							With Sales Code [EVA], After 1/28/02
6	55361038AF	1							SILENCER, Dash Panel
7	56021909AA	4							GROMMET, Body Wiring
8									NUT, Hex Flange, .25-7
	06034402	4			31, 61				
		4	5		84				
9	55361062AC	1			31				BAFFLE, Air, Cab Back
10	06504135	6							PIN, Push In, M6.3x15 LG

DAKOTA (AN)

SERIES	LINE	BODY	ENGINE	TRANSMISSION
L = Dakota (All)	1 = Dakota 2WD	61 = Regular Cab (112 WB)	EPE = 2.5L 4 Cylinder	DGK = 4 Speed Automatic 42RE
	5 = Dakota 4WD	31 = Club Cab (131 WB)	EHC = 3.9L 6 Cylinder	DGT = 4 Speed Automatic 46RE
		84 = Quad Cab (131 WB)	EML = 5.0L 8 Cylinder	DDC = 5 Speed HD Manual
			EVA = 4.7L Magnum V8	DDK = 5 Speed HD Manual
			EP0 = All 2.5L	DG4 = Multispeed Automatic 45RFE
			EH0 = All 3.9L	DG0 = All Automatic Transmissions
			EM0 = All 5.9L	DBB = All Manual Transmissions
			EV0 = All 4.7L	

Front Door Trim Panels
Figure IAN-410

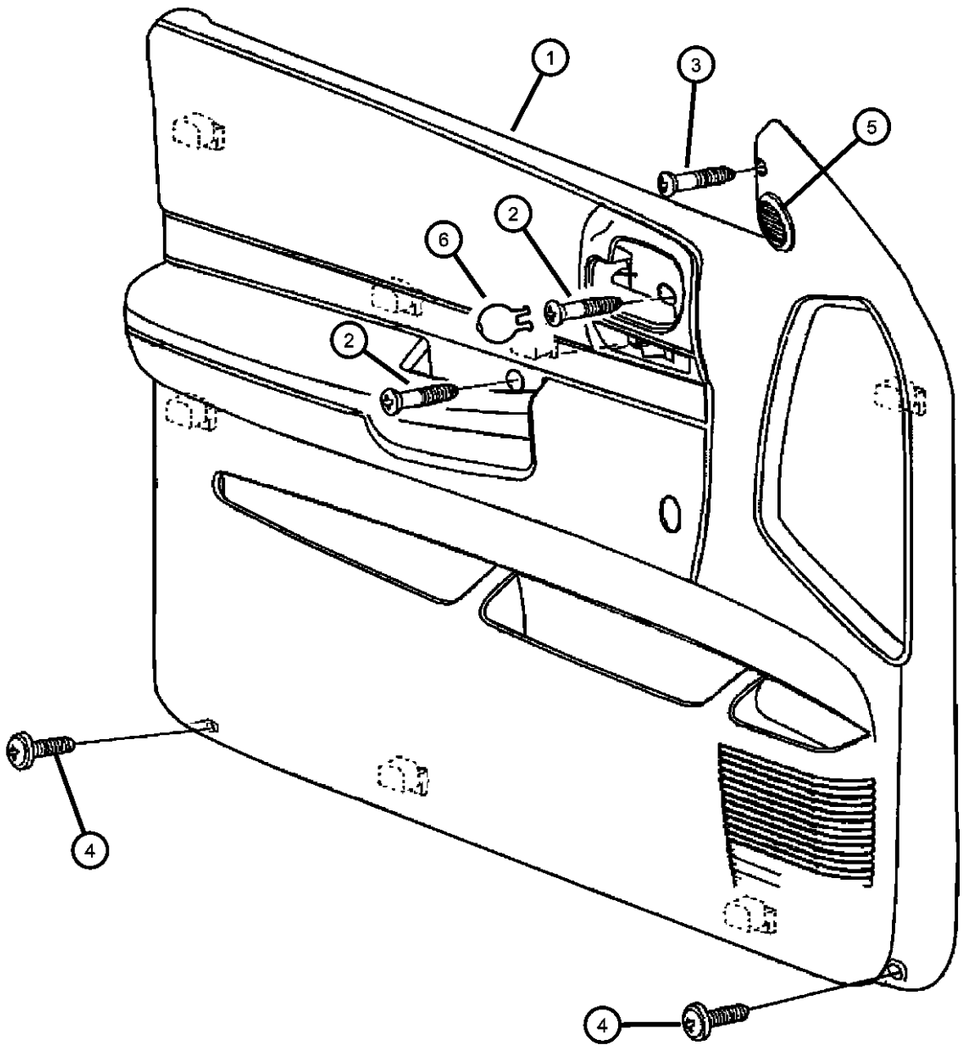

ITEM	PART NUMBER	QTY	LINE	SERIES	BODY	ENGINE	TRANS	TRIM	DESCRIPTION
1									PANEL, Front Door Trim
	0XX50WL5AA	1			31			*LJ	[L5], With Infinity, Right
		1			31			*QL	[L5], With Infinity, Right
	0XX50XDVAA	1			31			*LJ	[DV], With Infinity, Right
		1			31			*QL	[DV], With Infinity, Right
	0XX51WL5AA	1			31			*LJ	[L5], With Infinity, Left
		1			31			*QL	[L5], With Infinity, Left
	0XX51XDVAA	1			31			*LJ	[DV], With Infinity, Left
		1			31			*QL	[DV], With Infinity, Left
	5GP72WL5AA	1			31			*P9	[L5], Vinyl, Right
	5GP72XDVAA	1			31			*P9	[DV], Vinyl, Right
	5GP72WL5AB	1			61			*A2	[L5], Vinyl, Right
		1			61			*G1	[L5], Vinyl, Right
		1			31, 61			*K5	[L5], Vinyl, Right
	5GP72XDVAB	1			31, 61			*K5	[DV], Vinyl, Right
	5GP73WL5AA	1			31, 61			*G1	[L5], Vinyl, Left
		1			31			*P9	[L5], Vinyl, Left
	5GP73XDVAA	1			31			*P9	[DV], Vinyl, Left
	5GP73WL5AB	1			61			*A2	[L5], Vinyl, Left
		1			61			*G1	[L5], Vinyl, Left
		1			31, 61			*K5	[L5], Vinyl, Left
	5GP73XDVAB	1			31, 61			*K5	[DV], Vinyl, Left
	5GV30WL5AB	1			84			*K5	[L5], With Power, With or Without Infinity, Cut hole and Reuse or Replace Grille, Right
		1			84			*P9	[L5], With Power, With or Without Infinity, Cut hole and Reuse or Replace Grille, Right
	5GV30XDVAB	1			84			*K5	[DV], With Power, With or Without Infinity, Cut hole and Reuse or Replace Grille, Right
		1			84			*P9	[DV], With Power, With or Without Infinity, Cut hole and Reuse or Replace Grille, Right
	5GV31WL5AB	1			84			*K5	[L5], With Power, With or Without Infinity, Cut hole and Reuse or Replace Grille, Left

DAKOTA (AN)

SERIES	LINE	BODY	ENGINE	TRANSMISSION
L = Dakota (All)	1 = Dakota 2WD 5 = Dakota 4WD	61 = Regular Cab (112 WB) 31 = Club Cab (131 WB) 84 = Quad Cab (131 WB)	EPE = 2.5L 4 Cylinder EHC = 3.9L 6 Cylinder EML = 5.0L 8 Cylinder EVA = 4.7L Magnum V8 EP0 = All 2.5L EH0 = All 3.9L EM0 = All 5.9L EV0 = All 4.7L	DGK = 4 Speed Automatic 42RE DGT = 4 Speed Automatic 46RE DDC = 5 Speed HD Manual DDK = 5 Speed HD Manual DG4 = Multispeed Automatic 45RFE DG0 = All Automatic Transmissions DBB = All Manual Transmissions

Front Door Trim Panels
Figure IAN-410

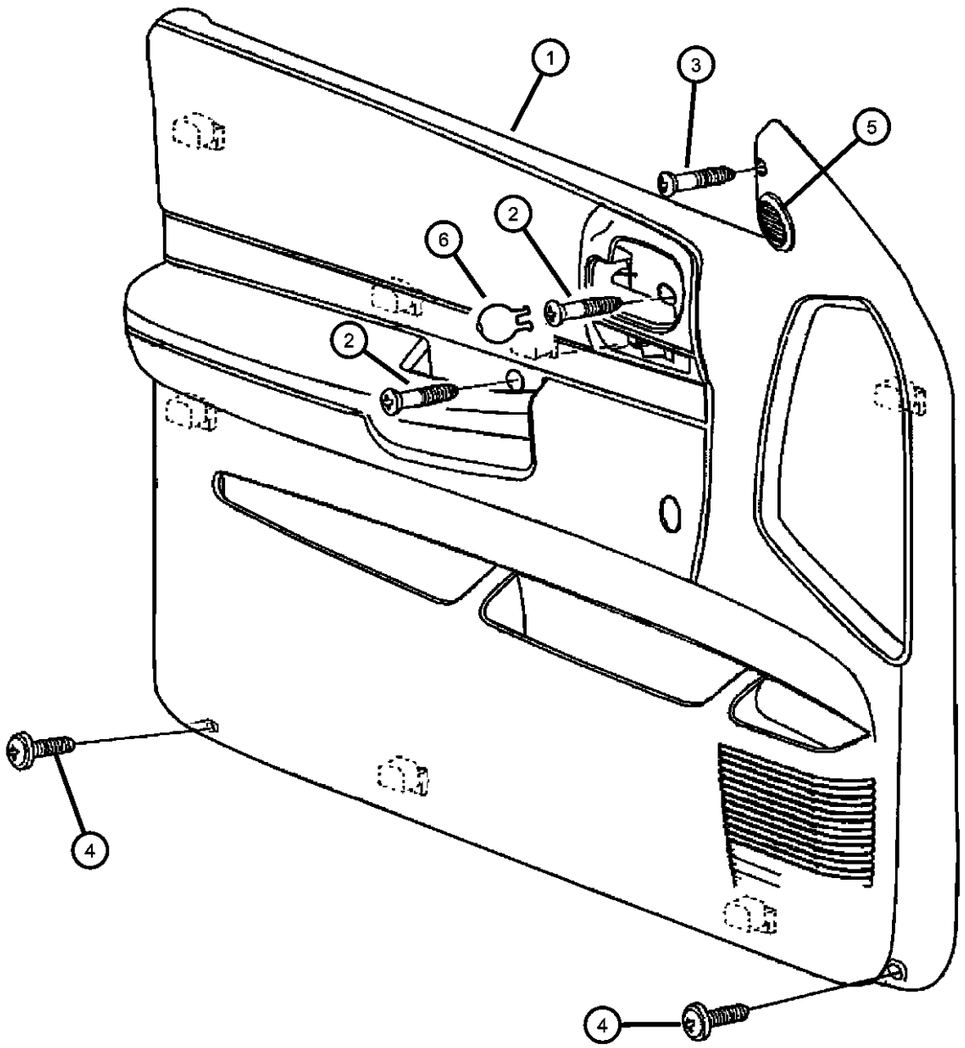

ITEM	PART NUMBER	QTY	LINE	SERIES	BODY	ENGINE	TRANS	TRIM	DESCRIPTION
		1			84			*P9	[L5], With Power, With or Without Infinity, Cut hole and Reuse or Replace Grille, Left
	5GV31XDVAB	1			84			*K5	[DV], With Power, With or Without Infinity, Cut hole and Reuse or Replace Grille, Left
		1			84			*P9	[DV], With Power, With or Without Infinity, Cut hole and Reuse or Replace Grille, Left
	5GV34WL5AB	1			84			*K5	[L5], Without Power, Right
		1			84			*P9	[L5], Without Power, Right
	5GV34XDVAB	1			84			*K5	[DV], Without Power, Right
		1			84			*P9	[DV], Without Power, Right
	5GV35WL5AB	1			84			*K5	[L5], Without Power, Left
		1			84			*P9	[L5], Without Power, Left
	5GV35XDVAB	1			84			*K5	[DV], Without Power, Left
		1			84			*P9	[DV], Without Power, Left
	5GV42WL5AB	1			31, 61			*P9	[L5], With Power, Infinity, Right
		1			31, 61			*K5	[L5], With Power, Infinity, Right
	5GV42XDVAB	1			31, 61			*P9	DV], With Power, Infinity, Right
		1			31, 61			*K5	[DV], With Power, Infinity, Right
	5GV43WL5AB	1			31, 61			*P9	[L5], With Power, Infinity, Left
		1			31, 61			*K5	[L5], With Power, Infinity, Left
	5GV43XDVAB	1			31, 61			*P9	[DV], With Power, Infinity, Left
		1			31, 61			*K5	[DV], With Power, Infinity, Left
	5GV48WL5AB	1			31, 61			*P9	[L5], With Infinity, Without Power, Right
		1			31, 61			*K5	[L5], With Infinity, Without Power, Right
	5GV48XDVAB	1			31, 61			*P9	[DV], With Infinity, Without Power, Right
		1			31, 61			*K5	[DV], With Infinity, Without Power, Right
	5GV49WL5AB	1			31, 61			*P9	[L5], With Infinity, Without Power, Left
		1			31, 61			*K5	[L5], With Infinity, Without Power, Left
	5GV49XDVAB	1			31, 61			*P9	[DV], With Infinity, Without Power, Left

DAKOTA (AN)

SERIES	LINE	BODY	ENGINE	TRANSMISSION
L = Dakota (All)	1 = Dakota 2WD 5 = Dakota 4WD	61 = Regular Cab (112 WB) 31 = Club Cab (131 WB) 84 = Quad Cab (131 WB)	EPE = 2.5L 4 Cylinder EHC = 3.9L 6 Cylinder EML = 5.0L 8 Cylinder EVA = 4.7L Magnum V8 EP0 = All 2.5L EH0 = All 3.9L EM0 = All 5.9L EV0 = All 4.7L	DGK = 4 Speed Automatic 42RE DGT = 4 Speed Automatic 46RE DDC = 5 Speed HD Manual DDK = 5 Speed HD Manual DG4 = Multispeed Automatic 45RFE DG0 = All Automatic Transmissions DBB = All Manual Transmissions

Front Door Trim Panels
Figure IAN-410

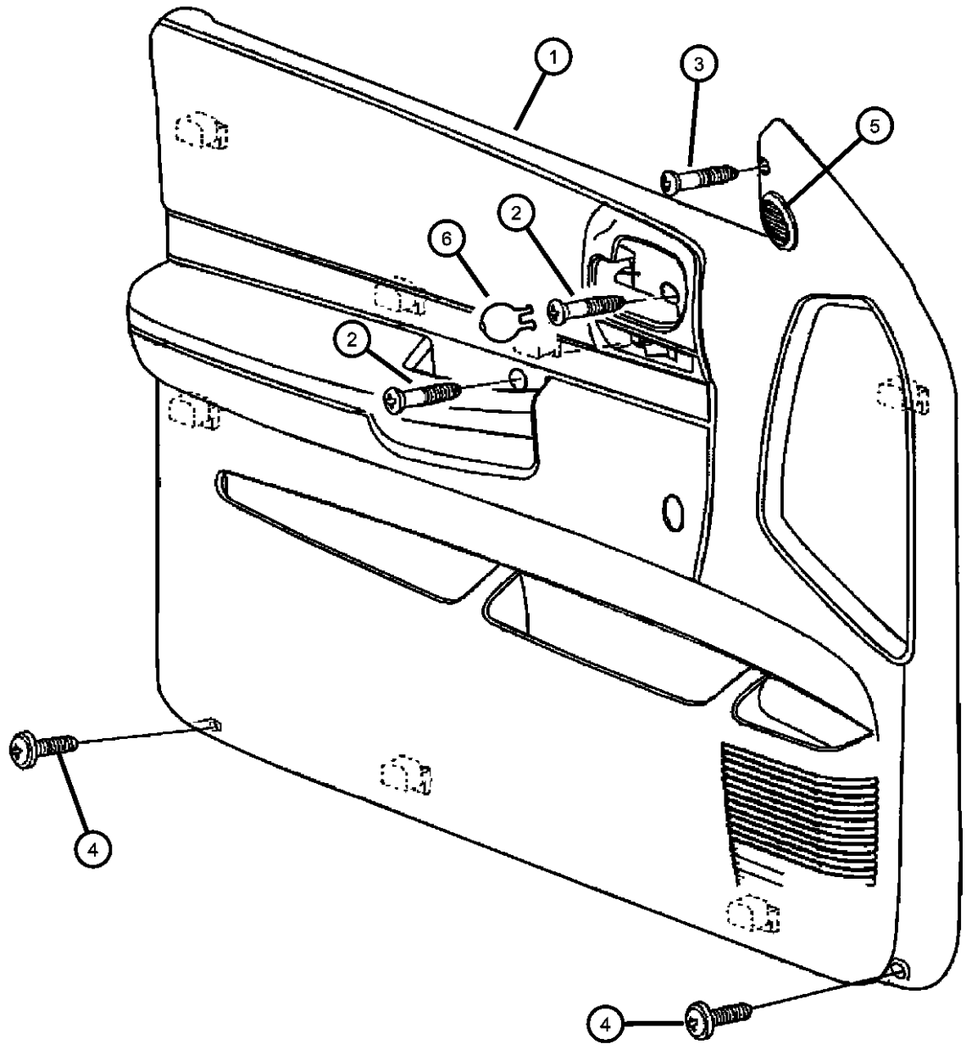

ITEM	PART NUMBER	QTY	LINE	SERIES	BODY	ENGINE	TRANS	TRIM	DESCRIPTION
		1			31, 61			*K5	[DV], With Infinity, Without Power, Left
	5GV50WL5AB	1			31, 61			*P9	[L5], With Power, Without Infinity, Right
		1			31, 61			*K5	[L5], With Power, Without Infinity, Right
	5GV50XDVAB	1			31, 61			*P9	[DV], With Power, Without Infinity, Right
		1			31, 61			*K5	[DV], With Power, Without Infinity, Right
	5GV51WL5AB	1			31, 61			*P9	[L5], With Power, Without Infinity, Left
		1			31, 61			*K5	[L5], With Power, Without Infinity, Left
	5GV51XDVAB	1			31, 61			*P9	[DV], With Power, Without Infinity, Left
		1			31, 61			*K5	[DV], With Power, Without Infinity, Left
	5GV58WL5AB	1			31, 61			*P9	[L5], Without Power or Infinity, Right
		1			31, 61			*K5	[L5], Without Power or Infinity, Right
	5GV58XDVAB	1			31, 61			*P9	[DV], Without Power or Infinity, Right
		1			31, 61			*K5	[DV], Without Power or Infinity, Right
	5GV59WL5AB	1			31, 61			*P9	[L5], With Power, Left
		1			31, 61			*K5	[L5], Without Power or Infinity, Left
	5GV59XDVAB	1			31, 61			*P9	[DV], Without Power or Infinity, Left
		1			31, 61			*K5	[DV], Without Power or Infinity, Left
	5HK78WL5AB	1			84			*LJ	[L5], Without Infinity, Right
		1			84			*QL	[L5], Without Infinity, Right
	5HK78XDVAB	1			84			*LJ	[DV], Without Infinity, Right
		1			84			*QL	[DV], Without Infinity, Right
	5HK79WL5AB	1			84			*LJ	[L5], Without Infinity, Left
		1			84			*QL	[L5], Without Infinity, Left
	5HK79XDVAB	1			84			*LJ	[DV], Without Infinity, Left
		1			84			*QL	[DV], Without Infinity, Left

DAKOTA (AN)

SERIES	LINE	BODY	ENGINE	TRANSMISSION
L = Dakota (All)	1 = Dakota 2WD 5 = Dakota 4WD	61 = Regular Cab (112 WB) 31 = Club Cab (131 WB) 84 = Quad Cab (131 WB)	EPE = 2.5L 4 Cylinder EHC = 3.9L 6 Cylinder EML = 5.0L 8 Cylinder EVA = 4.7L Magnum V8 EP0 = All 2.5L EH0 = All 3.9L EM0 = All 5.9L EV0 = All 4.7L	DGK = 4 Speed Automatic 42RE DGT = 4 Speed Automatic 46RE DDC = 5 Speed HD Manual DDK = 5 Speed HD Manual DG4 = Multispeed Automatic 45RFE DG0 = All Automatic Transmissions DBB = All Manual Transmissions

Front Door Trim Panels
Figure IAN-410

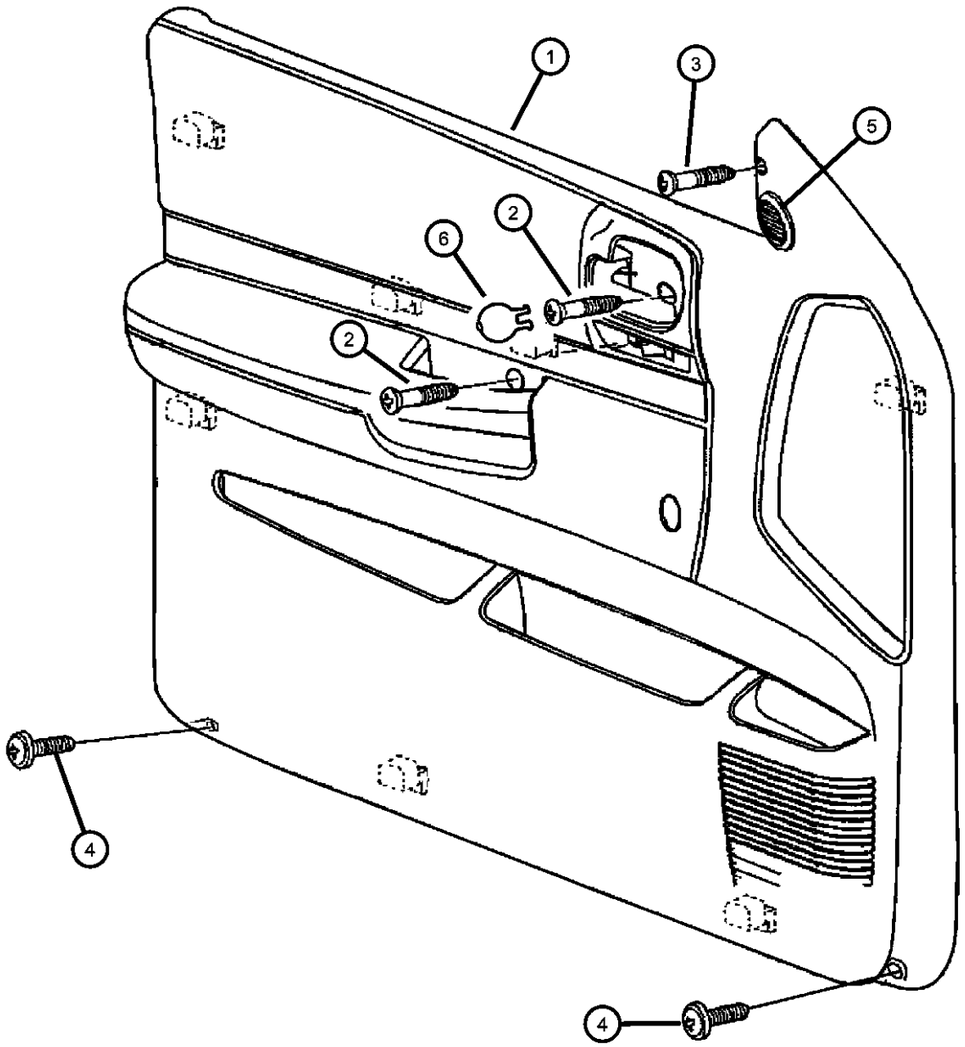

ITEM	PART NUMBER	QTY	LINE	SERIES	BODY	ENGINE	TRANS	TRIM	DESCRIPTION
	5HK80WL5AB	1			84			*LJ	[L5], With Infinity, Right
		1			84			*QL	[L5], With Infinity, Right
	5HK80XDVAB	1			84			*LJ	[DV], With Infinity, Right
		1			84			*QL	[DV], With Infinity, Right
	5HK81WL5AB	1			84			*LJ	[L5], With Infinity, Left
		1			84			*QL	[L5], With Infinity, Left
	5HK81XDVAB	1			84			*LJ	[DV], With Infinity, Left
		1			84			*QL	[DV], With Infinity, Left
	5JE48WL5AA	1			61			*A2	[L5], Vinyl, With Infinity, Right
		1			61			*G1	[L5], Vinyl, With Infinity, Right
		1			31			*P9	[L5], Vinyl, With Infinity, Right
	5JE48XDVAA	1			31			*P9	[DV], Vinyl, With Infinity, Right
	5JE49WL5AA	1			61			*A2	[L5], Vinyl, With Infinity, Left
		1			61			*G1	[L5], Vinyl, With Infinity, Left
		1			31			*P9	[L5], Vinyl, With Infinity, Left
	5JE49XDVAA	1			31			*P9	[DV], Vinyl, With Infinity, Left
	5JJ26WL5AA	1			61			*A2	[L5], Vinyl, With Power, Right
	5JJ27WL5AA	1			61			*A2	[L5], Vinyl, With Power, Left
	5JK80WL5AA	1			31			*QL	[L5], Without Infinity, Right
		1			31			*LJ	[L5], Without Infinity, Right
	5JK80XDVAA	1			31			*QL	[DV], Without Infinity, Right
		1			31			*LJ	[DV], Without Infinity, Right
	5JK81WL5AA	1			31			*QL	[L5], Without Infinity, Left
		1			31			*LJ	[L5], Without Infinity, Left
	5JK81XDVAA	1			31			*QL	[DV], Without Infinity, Left
		1			31			*LJ	[DV], Without Infinity, Left
2	06035372	2							SCREW, Pan Head Tapping, M6.3x1.8x22.23
3	06035372	2							SCREW, [.164-15x1.250], (NOT SERVICED)
4	06035372	2							SCREW, [.190-16x.750], (NOT SERVICED)
5									GRILLE, Speaker
	0UJ421DVAA	1			31, 61			*P9	[DV]

DAKOTA (AN)

SERIES	LINE	BODY	ENGINE	TRANSMISSION
L = Dakota (All)	1 = Dakota 2WD 5 = Dakota 4WD	61 = Regular Cab (112 WB) 31 = Club Cab (131 WB) 84 = Quad Cab (131 WB)	EPE = 2.5L 4 Cylinder EHC = 3.9L 6 Cylinder EML = 5.0L 8 Cylinder EVA = 4.7L Magnum V8 EP0 = All 2.5L EH0 = All 3.9L EM0 = All 5.9L EV0 = All 4.7L	DGK = 4 Speed Automatic 42RE DGT = 4 Speed Automatic 46RE DDC = 5 Speed HD Manual DDK = 5 Speed HD Manual DG4 = Multispeed Automatic 45RFE DG0 = All Automatic Transmissions DBB = All Manual Transmissions

Front Door Trim Panels
Figure IAN-410

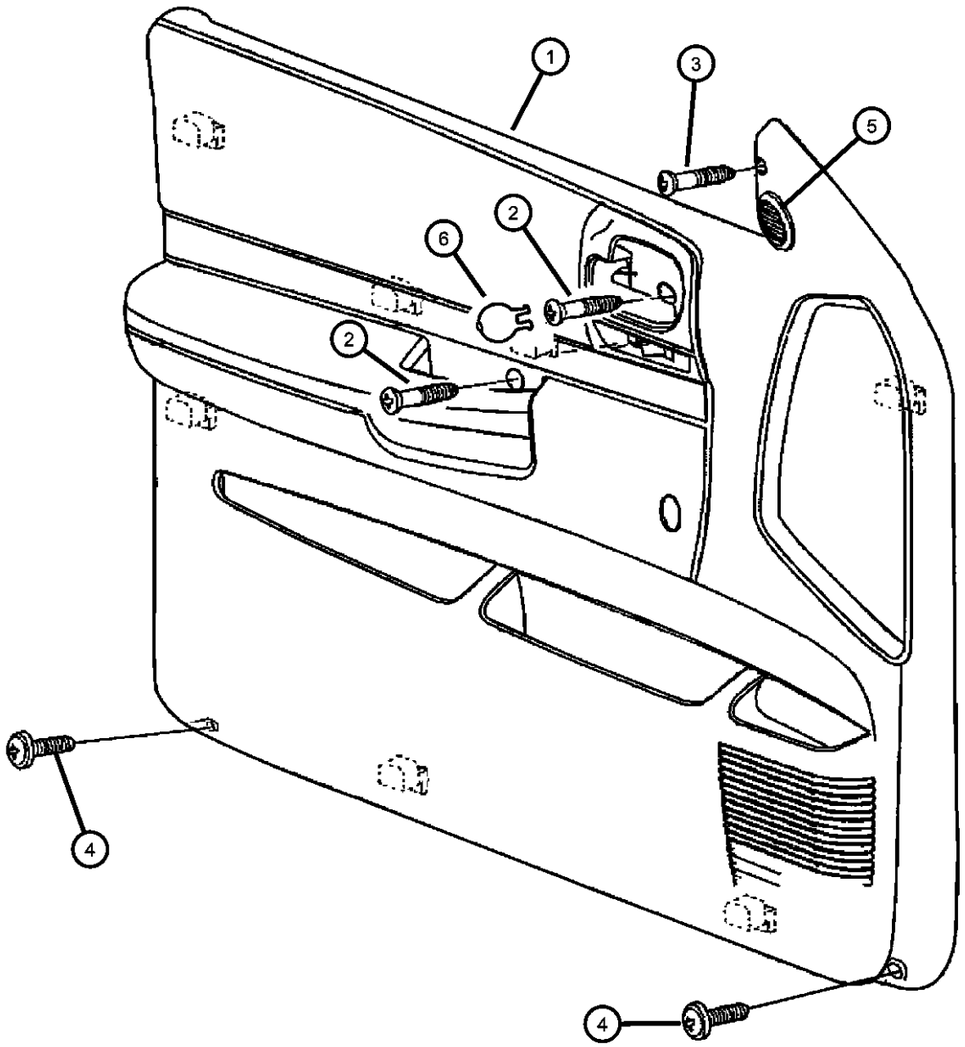

ITEM	PART NUMBER	QTY	LINE	SERIES	BODY	ENGINE	TRANS	TRIM	DESCRIPTION
		1			31, 61			*K5	[DV]
		1			84			*K5	[DV]
		1			84			*P9	[DV]
		1			84			*LJ	[DV]
		1			31, 84			*QL	[DV]
		1			31			*LJ	[DV]
	0UJ421L5AA	1			84			*K5	[L5]
		1			84			*P9	[L5]
		1			31, 61			*K5	[L5]
		1			31, 61			*P9	[L5]
		1			84			*LJ	[L5]
		1			31, 84			*QL	[L5]
		1			31			*LJ	[L5]
6									CAP, Handle Screw Cover
	0UJ411DVAA	1			31, 61			*K5	[DV]
		1			31, 61			*P9	[DV]
		1			84			*P9	[DV]
		1			84			*K5	[DV]
		1			84			*LJ	[DV]
	0UJ411L5AA	1			31, 61			*A2	[L5]
		1			31, 61			*G1	[L5]
		1			84			*K5	[L5]
		1			84			*P9	[L5]
		1			31, 61			*K5	[L5]
		1			84			*LJ	[L5]
	0UJ41WL5AA	1			61			*A2	[L5]
		1			61			*G1	[L5]
		1			31			*P9	[L5]

DAKOTA (AN)

SERIES	LINE	BODY	ENGINE	TRANSMISSION
L = Dakota (All)	1 = Dakota 2WD 5 = Dakota 4WD	61 = Regular Cab (112 WB) 31 = Club Cab (131 WB) 84 = Quad Cab (131 WB)	EPE = 2.5L 4 Cylinder EHC = 3.9L 6 Cylinder EML = 5.0L 8 Cylinder EVA = 4.7L Magnum V8 EP0 = All 2.5L EH0 = All 3.9L EM0 = All 5.9L EV0 = All 4.7L	DGK = 4 Speed Automatic 42RE DGT = 4 Speed Automatic 46RE DDC = 5 Speed HD Manual DDK = 5 Speed HD Manual DG4 = Multispeed Automatic 45RFE DG0 = All Automatic Transmissions DBB = All Manual Transmissions

Rear Door Trim Panels
Figure IAN-420

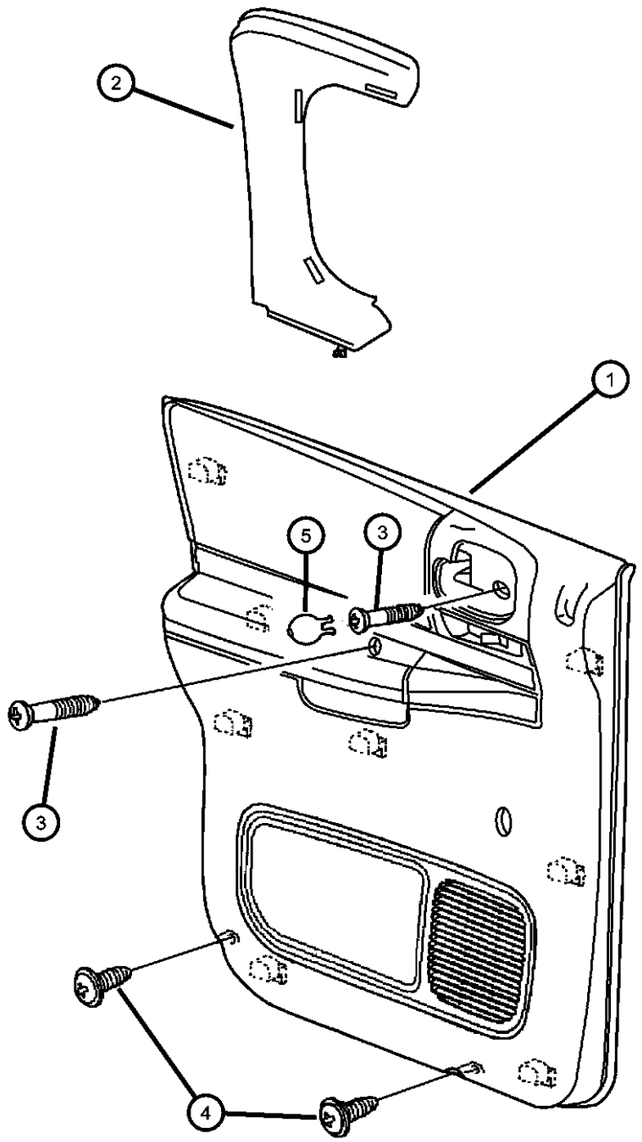

ITEM	PART NUMBER	QTY	LINE	SERIES	BODY	ENGINE	TRANS	TRIM	DESCRIPTION
1									PANEL, Rear Door Trim
	5GV36WL5AB	1			84			*K5	[L5], Right, Power
		1			84			*P9	[L5], Right, Power
	5GV36XDVAB	1			84			*K5	[DV], Right, Power
		1			84			*P9	[DV], Right, Power
	5GV37WL5AB	1			84			*K5	[L5], Left, Power
		1			84			*P9	[L5], Left, Power
	5GV37XDVAB	1			84			*K5	[DV], Left, Power
		1			84			*P9	[DV], Left, Power
	5GV38WL5AB	1			84			*K5	[L5], Right, Manual
		1			84			*P9	[L5], Right, Manual
	5GV38XDVAB	1			84			*K5	[DV], Right, Manual
		1			84			*P9	[DV], Right, Manual
	5GV39WL5AB	1			84			*K5	[L5], Left, Manual
		1			84			*P9	[L5], Left, Manual
	5GV39XDVAB	1			84			*K5	[DV], Left, Manual
		1			84			*P9	[DV], Left, Manual
	5HK82WL5AB	1			84			*LJ	[L5], Right, Power
	5HK82XDVAB	1			84			*LJ	[DV], Right, Power
	5HK83WL5AB	1			84			*LJ	[L5], Left, Power
	5HK83XDVAB	1			84			*LJ	[DV], Left, Power
2									MOLDING, Rear Door
	5GH12WL5AD	1			84			*O0	[L5], Right
	5GH12XD-VAD	1			84			*O0	[DV], Right
	5GH13WL5AD	1			84			*O0	[L5], Left
	5GH13XD-VAD	1			84			*O0	[DV], Left
3	5GH13XD-VAD	1							SCREW, .250-14x.875, (NOT SERVICED),
4	5GH13XD-VAD	1							SCREW, .190-16 X .750, (NOT SERVICED)
5									CAP, Handle Screw Cover
	0UJ411DVAA	1			84			*P9	[DV]
		1			84			*K5	[DV]

DAKOTA (AN)

SERIES	LINE	BODY	ENGINE	TRANSMISSION
L = Dakota (All)	1 = Dakota 2WD 5 = Dakota 4WD	61 = Regular Cab (112 WB) 31 = Club Cab (131 WB) 84 = Quad Cab (131 WB)	EPE = 2.5L 4 Cylinder EHC = 3.9L 6 Cylinder EML = 5.0L 8 Cylinder EVA = 4.7L Magnum V8 EP0 = All 2.5L EH0 = All 3.9L EM0 = All 5.9L EV0 = All 4.7L	DGK = 4 Speed Automatic 42RE DGT = 4 Speed Automatic 46RE DDC = 5 Speed HD Manual DDK = 5 Speed HD Manual DG4 = Multispeed Automatic 45RFE DG0 = All Automatic Transmissions DBB = All Manual Transmissions

Rear Door Trim Panels
Figure IAN-420

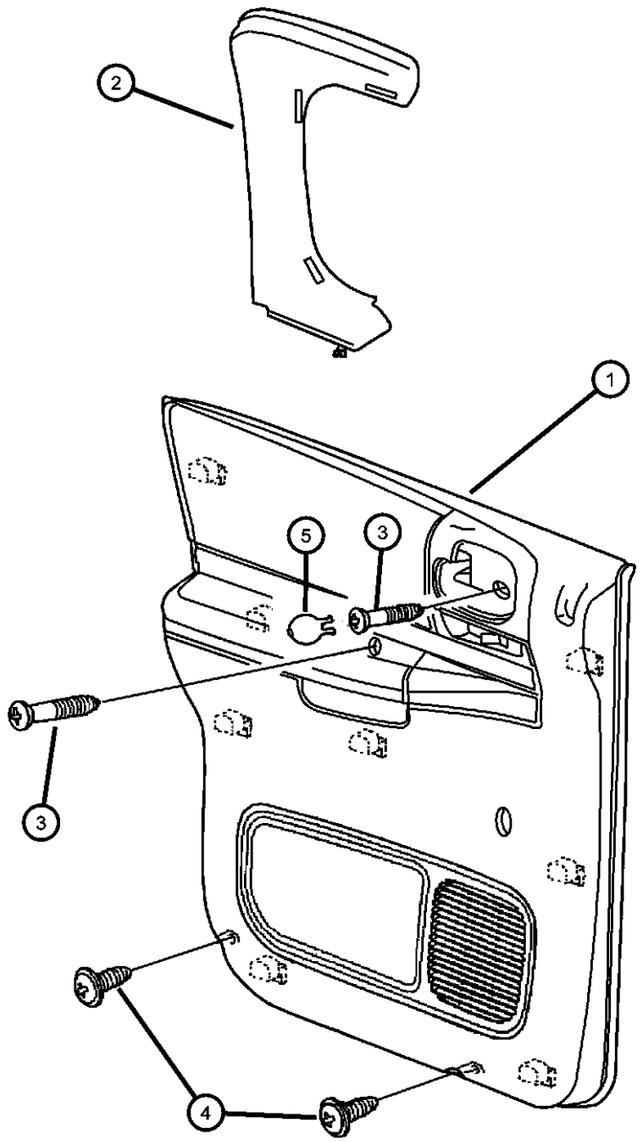

ITEM	PART NUMBER	QTY	LINE	SERIES	BODY	ENGINE	TRANS	TRIM	DESCRIPTION
	0UJ411L5AA	1			84			*K5	[L5]
		1			84			*LJ	[L5]
	0UJ41WL5AA	1			84			*P9	[L5]
	0UJ41XDVAA	1			84			*LJ	[DV]

DAKOTA (AN)

SERIES	LINE	BODY	ENGINE	TRANSMISSION
L = Dakota (All)	1 = Dakota 2WD	61 = Regular Cab (112 WB)	EPE = 2.5L 4 Cylinder	DGK = 4 Speed Automatic 42RE
	5 = Dakota 4WD	31 = Club Cab (131 WB)	EHC = 3.9L 6 Cylinder	DGT = 4 Speed Automatic 46RE
		84 = Quad Cab (131 WB)	EML = 5.0L 8 Cylinder	DDC = 5 Speed HD Manual
			EVA = 4.7L Magnum V8	DDK = 5 Speed HD Manual
			EP0 = All 2.5L	DG4 = Multispeed Automatic 45RFE
			EH0 = All 3.9L	DG0 = All Automatic Transmissions
			EM0 = All 5.9L	DBB = All Manual Transmissions
			EV0 = All 4.7L	

Seat Front, Full Bench, Trim Codes [A2, G1] Standard Cab
Figure IAN-510

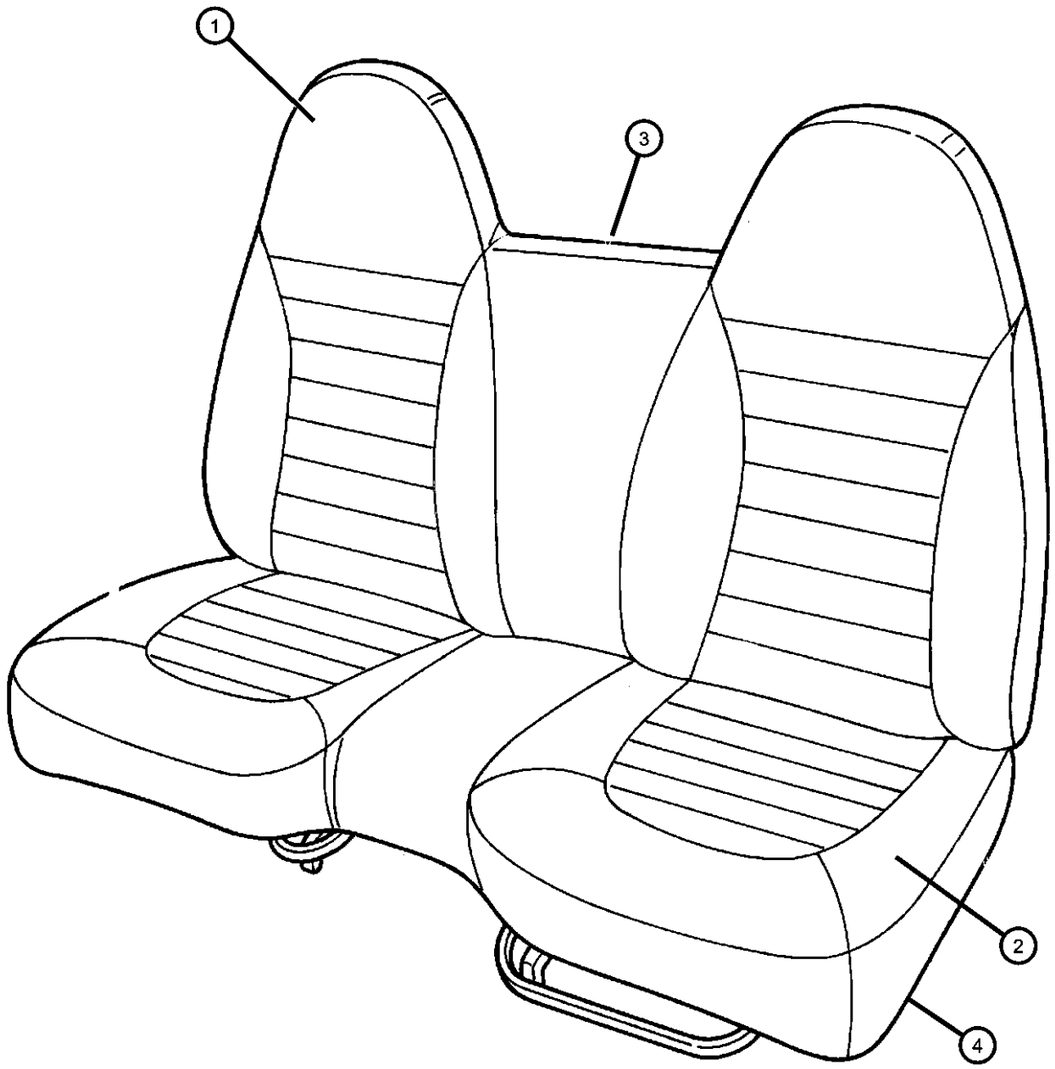

ITEM	PART NUMBER	QTY	LINE	SERIES	BODY	ENGINE	TRANS	TRIM	DESCRIPTION
1									COVER, Seat Back
	0TQ651L5AA	1			61			*A2	
	0TQ671L5AA	1			61			*G1	
2									COVER, Front Seat Cushion
	0TQ621L5AB	1			61			*A2	
	0TQ661L5AA	1			61			*G1	
3									BACK, Front Seat
	0TQ631L5AA	1			61			*A2	
	0TQ641L5AA	1			61			*G1	
4									CUSHION, Front Seat
	0TQ601L5AB	1			61			*A2	
	0TQ611L5AA	1			61			*G1	

DAKOTA (AN)

SERIES	LINE	BODY	ENGINE	TRANSMISSION
L = Dakota (All)	1 = Dakota 2WD	61 = Regular Cab (112 WB)	EPE = 2.5L 4 Cylinder	DGK = 4 Speed Automatic 42RE
	5 = Dakota 4WD	31 = Club Cab (131 WB)	EHC = 3.9L 6 Cylinder	DGT = 4 Speed Automatic 46RE
		84 = Quad Cab (131 WB)	EML = 5.0L 8 Cylinder	DDC = 5 Speed HD Manual
			EVA = 4.7L Magnum V8	DDK = 5 Speed HD Manual
			EP0 = All 2.5L	DG4 = Multispeed Automatic 45RFE
			EH0 = All 3.9L	DG0 = All Automatic Transmissions
			EM0 = All 5.9L	DBB = All Manual Transmissions
			EV0 = All 4.7L	

Seat Front, Split Bench, Trim Code [P9]
Figure IAN-520

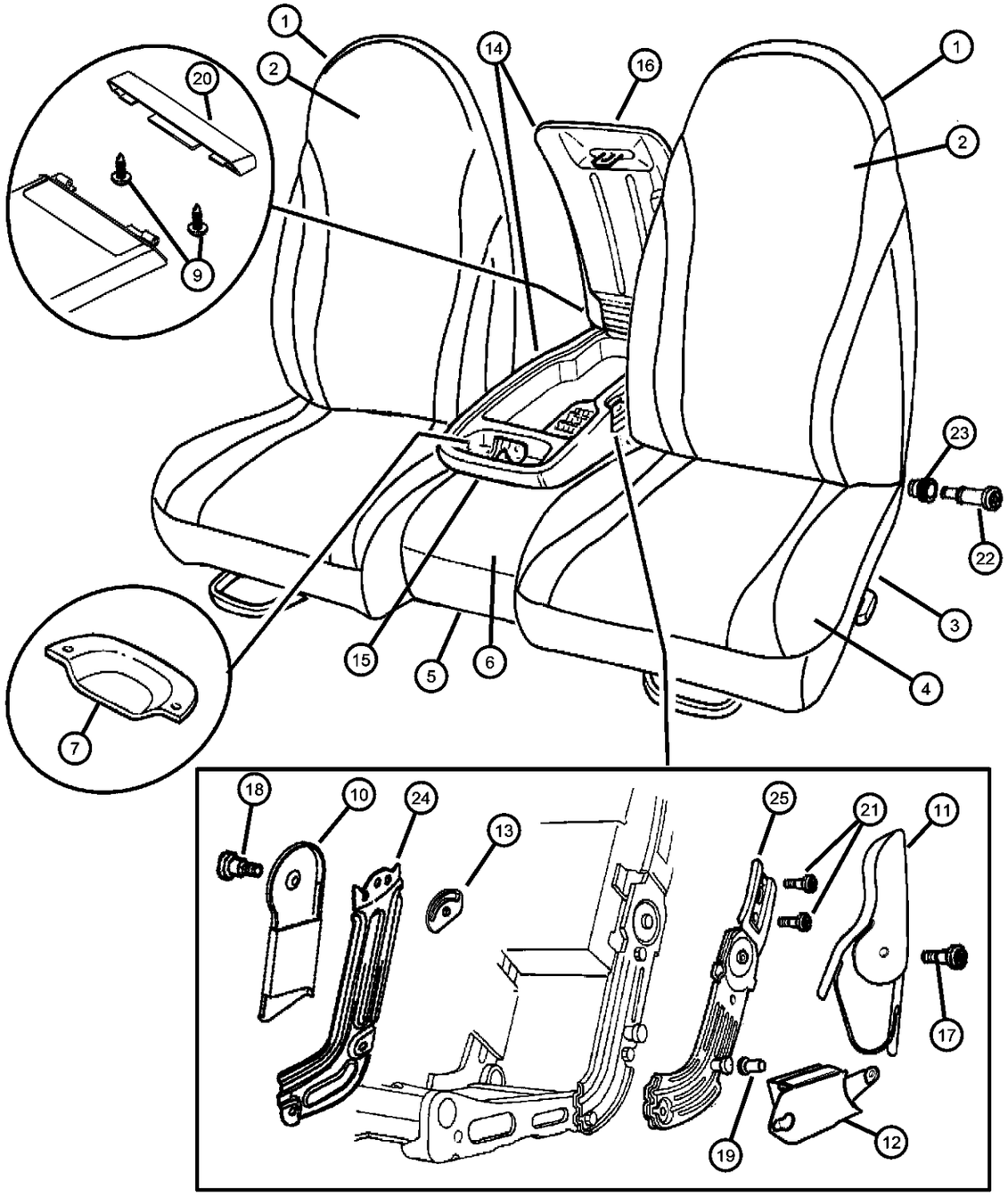

ITEM	PART NUMBER	QTY	LINE	SERIES	BODY	ENGINE	TRANS	TRIM	DESCRIPTION
1									BACK, Front Seat
	0WP821DVAA	1			84			*P9	[DV], Passenger
	0WP821L5AA	1			84			*P9	[L5], Passenger
	0WP831DVAA	1			84			*P9	[DV], Driver, Power
	0WP831L5AA	1			84			*P9	[L5], Driver, Power
	0WP901DVAA	2			61			*P9	[DV], Driver, Passenger
	0WP901L5AA	2			61			*P9	[L5], Driver, Passenger
	0WP911DVAA	1			84			*P9	[DV], Driver, Manual
	0WP911L5AA	1			84			*P9	[L5], Driver, Manual
	0WP941DVAA	1			31			*P9	[DV], Passenger
	0WP941L5AA	1			31			*P9	[L5], Passenger
	0WP951DVAA	1			31			*P9	[DV], Driver, Power
	0WP951L5AA	1			31			*P9	[L5], Driver, Power
	0WP971DVAA	1			31			*P9	[DV], Driver, Manual
	0WP971L5AA	1			31			*P9	[L5], Driver, Manual
2									COVER, Seat Back
	0WP841DVAA	1			84			*P9	[DV], Passenger
	0WP841L5AA	1			84			*P9	[L5], Passenger
	0WP851DVAA	1			84			*P9	[DV], Driver
	0WP851L5AA	1			84			*P9	[L5], Driver
	0WP881DVAA	2			31			*P9	[DV], Driver, Passenger
		2			61			*P9	[DV], Driver, Passenger
	0WP881L5AA	2			31			*P9	[L5], Driver, Passenger
		2			61			*P9	[L5], Driver, Passenger
3									CUSHION, Front Seat, Contains: Frame, Recliner, Cable and Trim Cover
	0WP781DVAA	1			84			*P9	[DV], Passenger
	0WP781L5AA	1			84			*P9	[L5], Passenger
	0WP791DVAA	1			84			*P9	[DV], Driver, Power
	0WP791L5AA	1			84			*P9	[L5], Driver, Power
	0WP891DVAA	1			84			*P9	[DV], Driver, Manual
	0WP891L5AA	1			84			*P9	[L5], Driver, Manual
	0WP921DVAA	1			31			*P9	[DV], Passenger

DAKOTA (AN)

SERIES	LINE	BODY	ENGINE	TRANSMISSION
L = Dakota (All)	1 = Dakota 2WD 5 = Dakota 4WD	61 = Regular Cab (112 WB) 31 = Club Cab (131 WB) 84 = Quad Cab (131 WB)	EPE = 2.5L 4 Cylinder EHC = 3.9L 6 Cylinder EML = 5.0L 8 Cylinder EVA = 4.7L Magnum V8 EP0 = All 2.5L EH0 = All 3.9L EM0 = All 5.9L EV0 = All 4.7L	DGK = 4 Speed Automatic 42RE DGT = 4 Speed Automatic 46RE DDC = 5 Speed HD Manual DDK = 5 Speed HD Manual DG4 = Multispeed Automatic 45RFE DG0 = All Automatic Transmissions DBB = All Manual Transmissions

Seat Front, Split Bench, Trim Code [P9]
Figure IAN-520

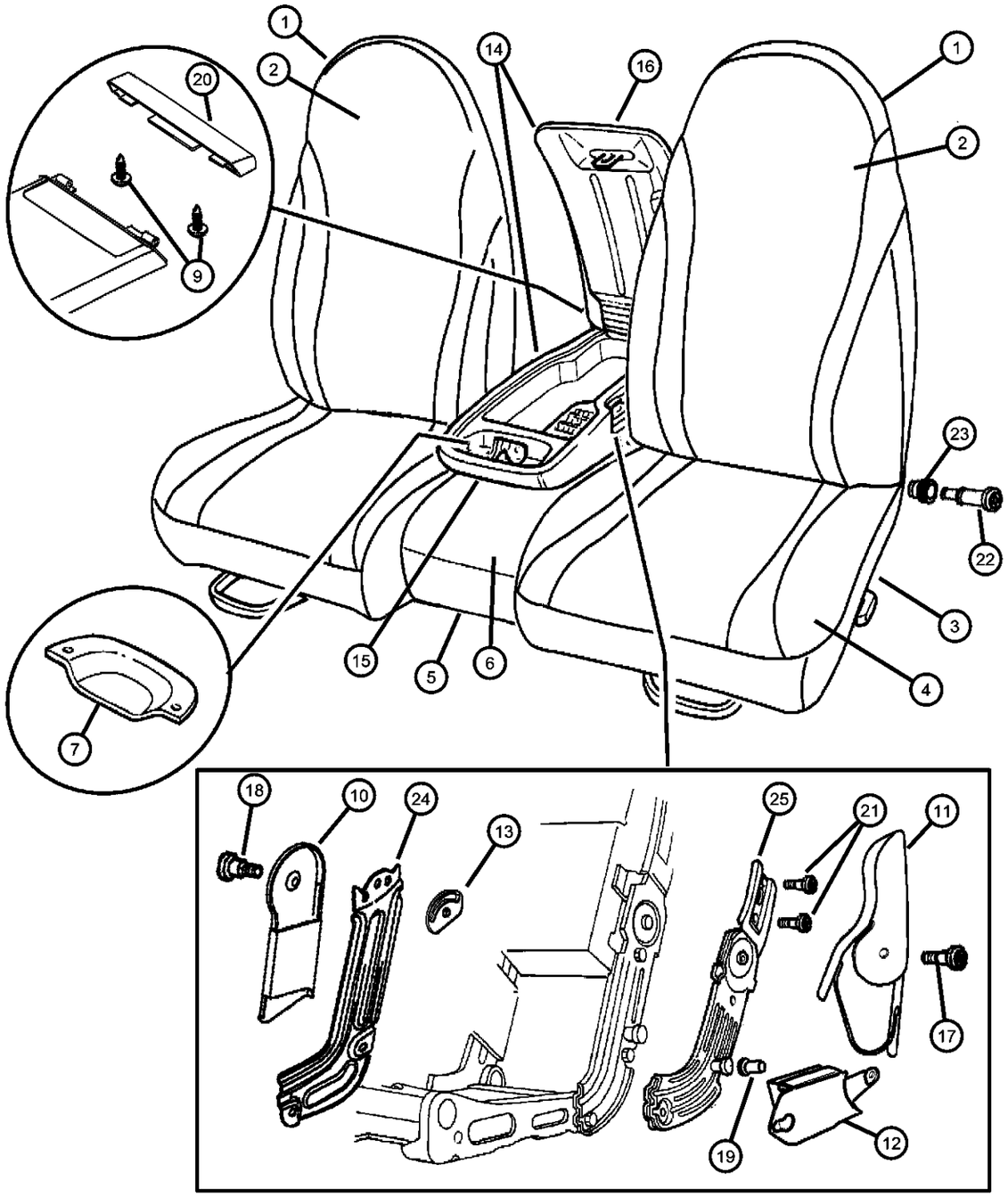

ITEM	PART NUMBER	QTY	LINE	SERIES	BODY	ENGINE	TRANS	TRIM	DESCRIPTION
	0WP921L5AA	1			31			*P9	[L5], Passenger
	0WP931DVAA	1			31			*P9	[DV], Driver, Power
	0WP931L5AA	1			31			*P9	[L5], Driver, Power
	0WP991DVAA	1			31			*P9	[DV], Driver, Manual
	0WP991L5AA	1			31			*P9	[L5], Driver, Manual
	0WQ001DVAA	1			61			*P9	[DV], Passenger
	0WQ001L5AA	1			61			*P9	[L5], Passenger
	0WQ011DVAA	1			61			*P9	[DV], Driver
	0WQ011L5AA	1			61			*P9	[L5], Driver
4									COVER, Front Seat Cushion
	0WP771DVAA	1			84			*P9	[DV], Driver, Manual
		1			31			*P9	, Driver, Manual
		1			61			*P9	[DV], Driver
	0WP771L5AA	1			84			*P9	[L5], Driver, Manual
		1			31			*P9	[L5], Driver, Manual
		1			61			*P9	[L5], Driver
	0WP801DVAA	1			84			*P9	[DV], Passenger
		1			31			*P9	[DV], Passenger
		1			61			*P9	[DV], Passenger
	0WP801L5AA	1			84			*P9	[L5], Passenger
		1			31			*P9	[L5], Passenger
		1			61			*P9	[L5], Passenger
	0WP811DVAA	1			84			*P9	[DV], Driver, Power
		1			61			*P9	[L5], Passenger
	0WP811DVAA	1			84			*P9	[DV], Driver, Power
		1			31			*P9	[DV], Driver, Power
	0WP811L5AA	1			84			*P9	[L5], Driver, Power
		1			31			*P9	[L5], Driver, Power
5									CUSHION, Front Seat, 20%
	0WP861DVAA	1			84			*P9	[DV]
		1			31			*P9	[DV]
		1			61			*P9	[DV]
	0WP861L5AA	1			84			*P9	[L5]
		1			31			*P9	[L5]

DAKOTA (AN)

SERIES	LINE	BODY	ENGINE	TRANSMISSION
L = Dakota (All)	1 = Dakota 2WD	61 = Regular Cab (112 WB)	EPE = 2.5L 4 Cylinder	DGK = 4 Speed Automatic 42RE
	5 = Dakota 4WD	31 = Club Cab (131 WB)	EHC = 3.9L 6 Cylinder	DGT = 4 Speed Automatic 46RE
		84 = Quad Cab (131 WB)	EML = 5.0L 8 Cylinder	DDC = 5 Speed HD Manual
			EVA = 4.7L Magnum V8	DDK = 5 Speed HD Manual
			EP0 = All 2.5L	DG4 = Multispeed Automatic 45RFE
			EH0 = All 3.9L	DG0 = All Automatic Transmissions
			EM0 = All 5.9L	DBB = All Manual Transmissions
			EV0 = All 4.7L	

Seat Front, Split Bench, Trim Code [P9]
Figure IAN-520

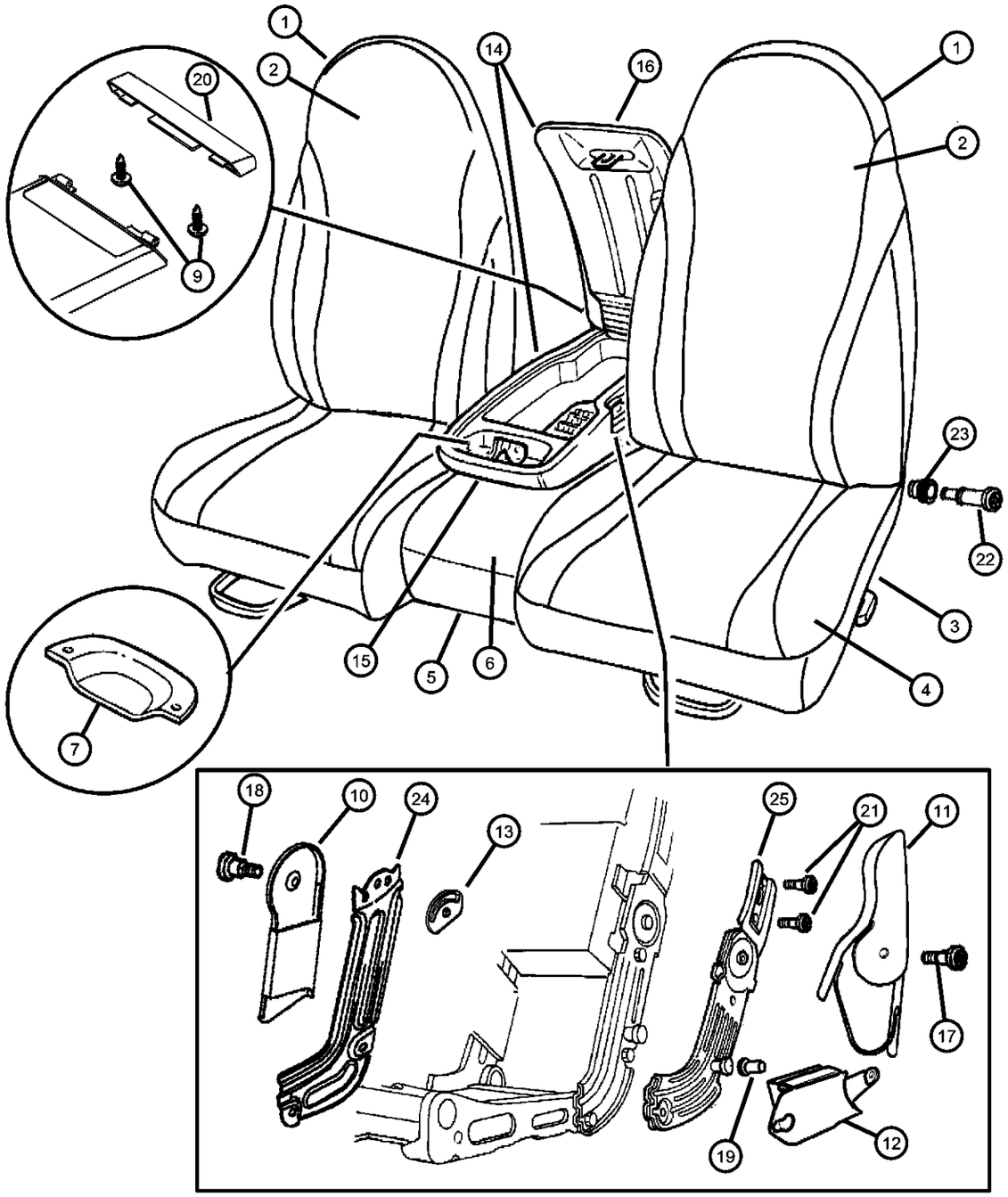

ITEM	PART NUMBER	QTY	LINE	SERIES	BODY	ENGINE	TRANS	TRIM	DESCRIPTION
		1			61			*P9	[L5]
6									COVER, Front Seat Cushion, 20%
	0WP871DVAA	1			84			*P9	[DV]
		1			31			*P9	[DV]
		1			61			*P9	[DV]
	0WP871L5AA	1			84			*P9	[L5]
		1			31			*P9	[L5]
		1			61			*P9	[L5]
7									BEZEL, Armrest
	05015008AA	1			31			*P9	
		1			61			*P9	
		1			84			*P9	
-8									REPAIR KIT, Armrest latch, Contains : Handle, Rivet and Locking Mechinism
	05015638AA	1			31			*P9	
		1			61			*P9	
		1			84			*P9	
9									SCREW, Arm Rest Bracket
	04883529AA	2			61			*P9	
		2			31			*P9	
		2			84			*P9	
10									COVER, Bracket
	04773418	1			31			*P9	
		1			61			*P9	
		1			84			*P9	
11									COVER, Seat latch
	05017734AA	1			31			*P9	Upper
		1			61			*P9	Upper
		1			84			*P9	Upper
12									COVER, Seat latch
	05016165AB	1			31			*P9	Lower
		1			61			*P9	Lower

DAKOTA (AN)

SERIES	LINE	BODY	ENGINE	TRANSMISSION
L = Dakota (All)	1 = Dakota 2WD	61 = Regular Cab (112 WB)	EPE = 2.5L 4 Cylinder	DGK = 4 Speed Automatic 42RE
	5 = Dakota 4WD	31 = Club Cab (131 WB)	EHC = 3.9L 6 Cylinder	DGT = 4 Speed Automatic 46RE
		84 = Quad Cab (131 WB)	EML = 5.0L 8 Cylinder	DDC = 5 Speed HD Manual
			EVA = 4.7L Magnum V8	DDK = 5 Speed HD Manual
			EP0 = All 2.5L	DG4 = Multispeed Automatic 45RFE
			EH0 = All 3.9L	DG0 = All Automatic Transmissions
			EM0 = All 5.9L	DBB = All Manual Transmissions
			EV0 = All 4.7L	

AR = use ase required - = Non illustrrated part

Seat Front, Split Bench, Trim Code [P9]
Figure IAN-520

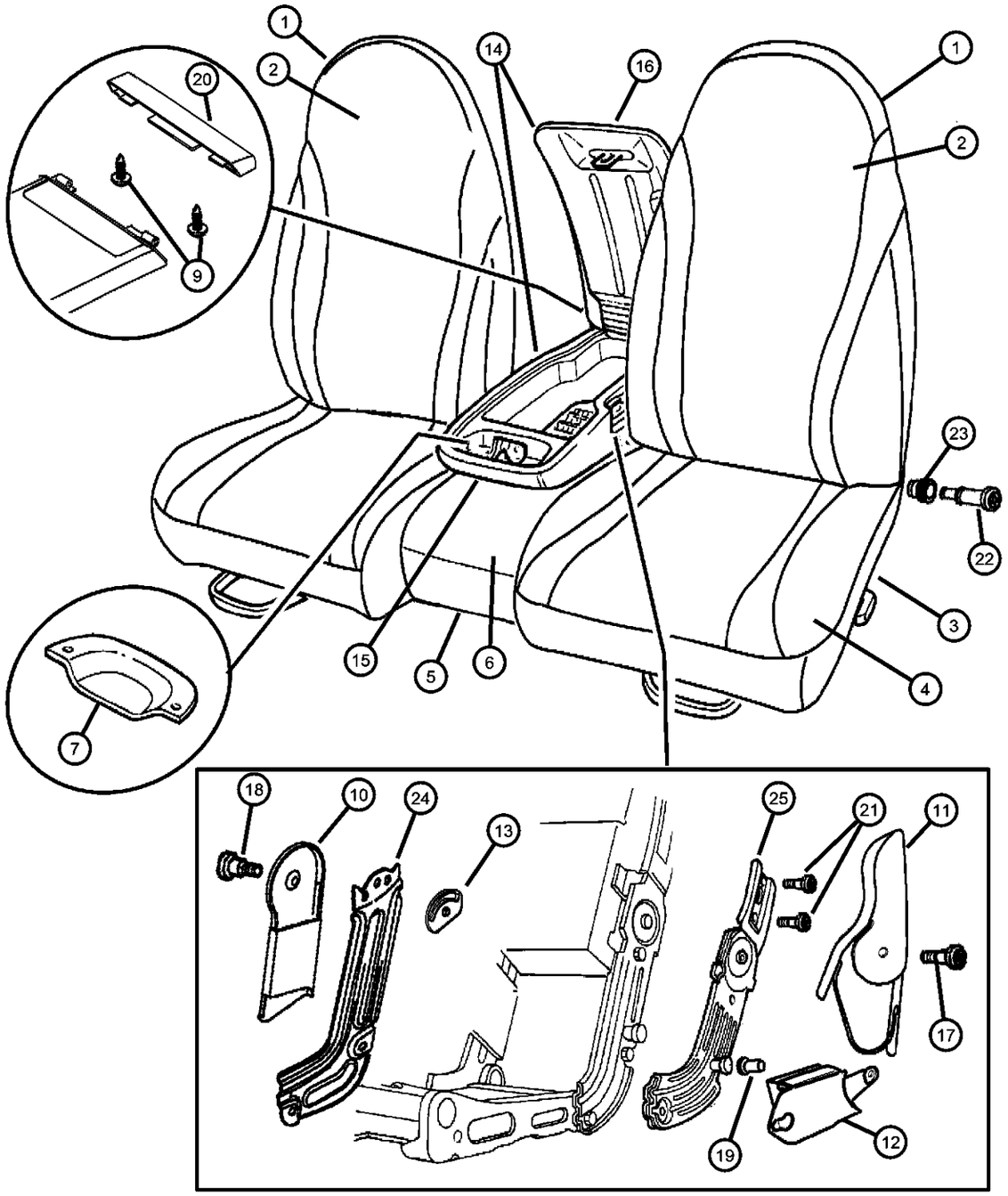

ITEM	PART NUMBER	QTY	LINE	SERIES	BODY	ENGINE	TRANS	TRIM	DESCRIPTION
		1			84			*P9	Lower
13									BUSHING, Seat Inertia Latch
	04886420AA	1			31			*P9	
		1			61			*P9	
		1			84			*P9	
14									ARMREST, Seat, Complete
	0TG111DVAA	1			31			*P9	[DV]
		1			61			*P9	[DV]
		1			84			*P9	[DV]
	0TG111L5AA	1			31			*P9	[L5]
		1			61			*P9	[L5]
		1			84			*P9	[L5]
15									BASE, Armrest, With Liner Insert
	0XL411DVAA	1			31			*P9	[DV]
		1			61			*P9	[DV]
		1			84			*P9	[DV]
	0XL411L5AA	1			31			*P9	[L5]
		1			61			*P9	[L5]
		1			84			*P9	[L5]
16									LID, Armrest Bin
	0UR381DVAA	1			84			*P9	[DV]
		1			31			*P9	[DV]
		1			61			*P9	[DV]
	0UR381L5AA	1			84			*P9	[L5]
		1			31			*P9	[L5]
		1			61			*P9	[L5]
17									BOLT, Shoulder
	04883533AA	1			61			*P9	
		1			31			*P9	
		1			84			*P9	
18									BOLT, Shoulder, Pivot Bracket
	04883535AA	1			31			*P9	

DAKOTA (AN)

SERIES	LINE	BODY	ENGINE	TRANSMISSION
L = Dakota (All)	1 = Dakota 2WD	61 = Regular Cab (112 WB)	EPE = 2.5L 4 Cylinder	DGK = 4 Speed Automatic 42RE
	5 = Dakota 4WD	31 = Club Cab (131 WB)	EHC = 3.9L 6 Cylinder	DGT = 4 Speed Automatic 46RE
		84 = Quad Cab (131 WB)	EML = 5.0L 8 Cylinder	DDC = 5 Speed HD Manual
			EVA = 4.7L Magnum V8	DDK = 5 Speed HD Manual
			EP0 = All 2.5L	DG4 = Multispeed Automatic 45RFE
			EH0 = All 3.9L	DG0 = All Automatic Transmissions
			EM0 = All 5.9L	DBB = All Manual Transmissions
			EV0 = All 4.7L	

Seat Front, Split Bench, Trim Code [P9]
Figure IAN-520

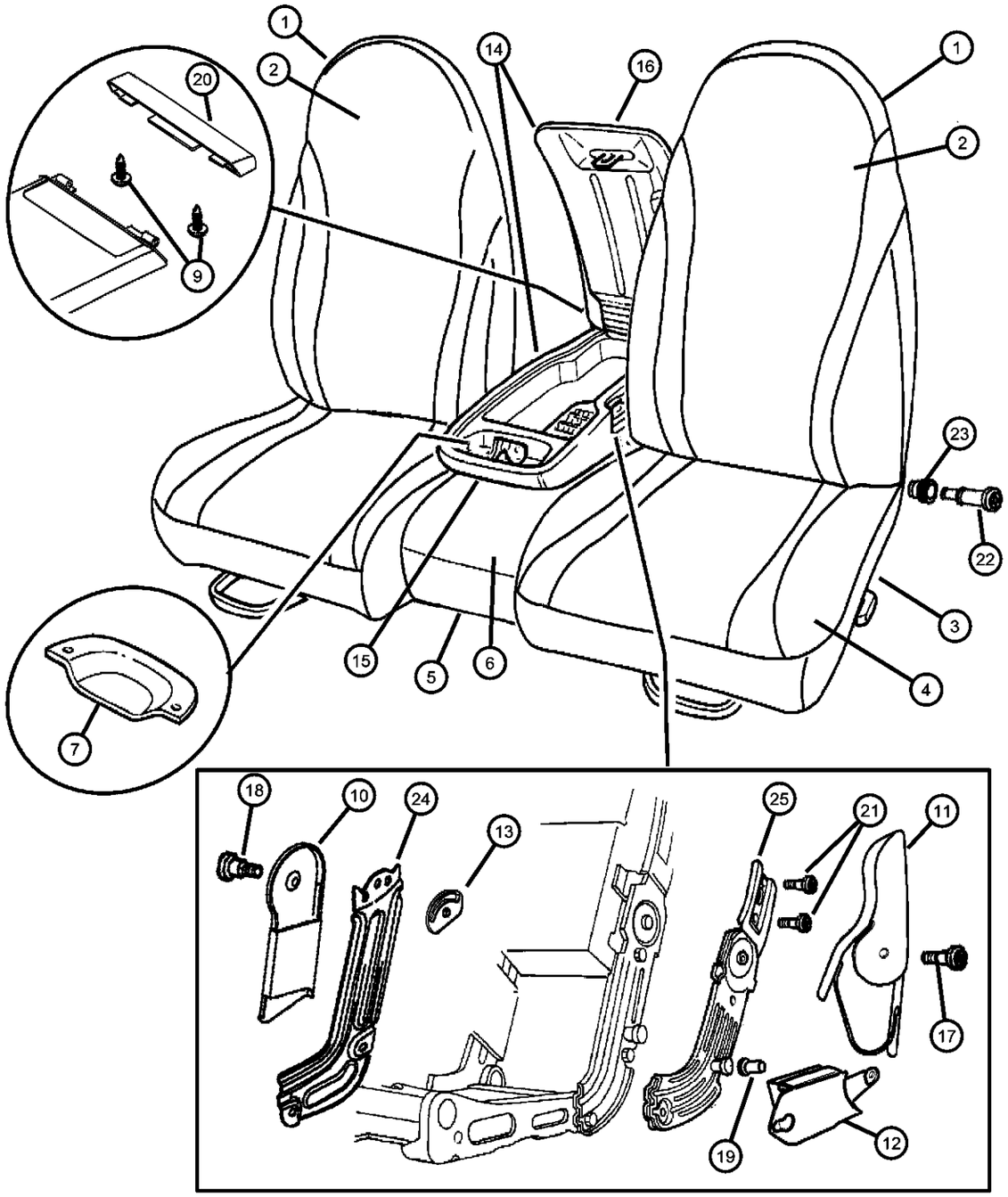

ITEM	PART NUMBER	QTY	LINE	SERIES	BODY	ENGINE	TRANS	TRIM	DESCRIPTION
		1			61			*P9	
		1			84			*P9	
19									WASHER, Upper Pivot
	04883562AA	1			31			*P9	
		1			61			*P9	
		1			84			*P9	
20									COVER, Hinge
	0SD741DVAA	1			31			*P9	[DV]
		1			61			*P9	[DV]
		1			84			*P9	[DV]
	0SD741L5AA	1			31			*P9	[L5]
		1			61			*P9	[L5]
		1			84			*P9	[L5]
21									BOLT, M8x1.25x25
	04883540AA	10			61			*P9	
		10			31			*P9	
		10			84			*P9	Manual Seat
		12			84			*P9	Power Seat
		1			61			*P9	
		1			31			*P9	
		1			84			*P9	
22									BOLT, Seat, Cushion to Frame
	05086165AA	4			61			*P9	
		4			84			*P9	
		4			31			*P9	
23									BUSHING, Pivot
	04886477AA	1			61			*P9	
		1			31			*P9	
		1			84			*P9	
24									BRACKET, Pivot
	05086976AA	1			31			*P9	
		1			61			*P9	

DAKOTA (AN)

SERIES	LINE	BODY	ENGINE	TRANSMISSION
L = Dakota (All)	1 = Dakota 2WD	61 = Regular Cab (112 WB)	EPE = 2.5L 4 Cylinder	DGK = 4 Speed Automatic 42RE
	5 = Dakota 4WD	31 = Club Cab (131 WB)	EHC = 3.9L 6 Cylinder	DGT = 4 Speed Automatic 46RE
		84 = Quad Cab (131 WB)	EML = 5.0L 8 Cylinder	DDC = 5 Speed HD Manual
			EVA = 4.7L Magnum V8	DDK = 5 Speed HD Manual
			EP0 = All 2.5L	DG4 = Multispeed Automatic 45RFE
			EH0 = All 3.9L	DG0 = All Automatic Transmissions
			EM0 = All 5.9L	DBB = All Manual Transmissions
			EV0 = All 4.7L	

Seat Front, Split Bench, Trim Code [P9]
Figure IAN-520

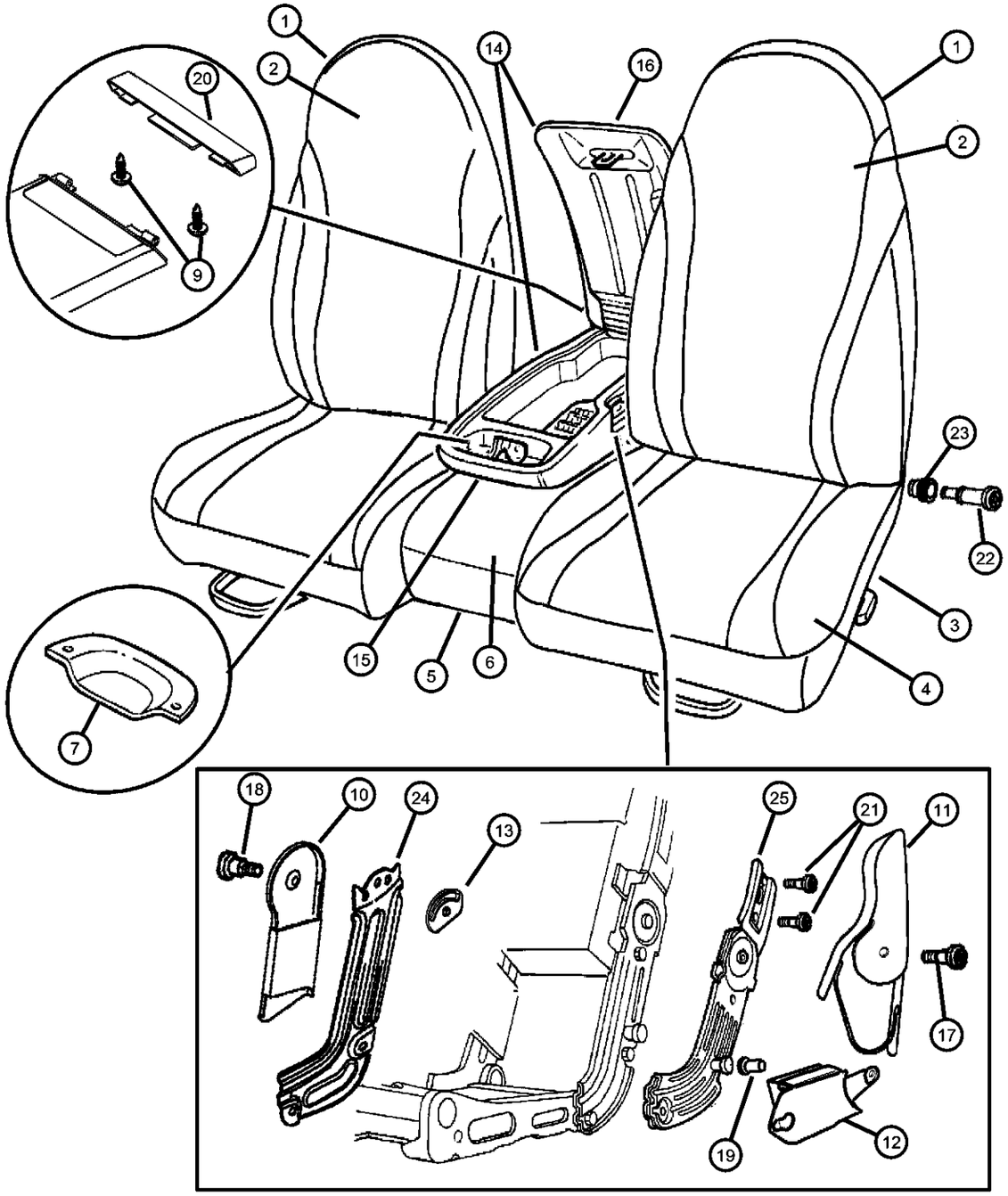

ITEM	PART NUMBER	QTY	LINE	SERIES	BODY	ENGINE	TRANS	TRIM	DESCRIPTION
		1			84			*P9	
25									LATCH
	05086977AA	1			31			*P9	
		1			61			*P9	
		1			84			*P9	
-26									PIN, Armrest Lid Hinge, Consists Of: Detent, Lid Hinge, Pin, Armrest Hinge, Detent, Bin Hinge, Spring, Armrest Hinge, Screw, Armrest Hinge
	05134381AA	1			61			*P9	
		1			31			*P9	
		1			84			*P9	

DAKOTA (AN)

SERIES	LINE	BODY	ENGINE	TRANSMISSION
L = Dakota (All)	1 = Dakota 2WD	61 = Regular Cab (112 WB)	EPE = 2.5L 4 Cylinder	DGK = 4 Speed Automatic 42RE
	5 = Dakota 4WD	31 = Club Cab (131 WB)	EHC = 3.9L 6 Cylinder	DGT = 4 Speed Automatic 46RE
		84 = Quad Cab (131 WB)	EML = 5.0L 8 Cylinder	DDC = 5 Speed HD Manual
			EVA = 4.7L Magnum V8	DDK = 5 Speed HD Manual
			EP0 = All 2.5L	DG4 = Multispeed Automatic 45RFE
			EH0 = All 3.9L	DG0 = All Automatic Transmissions
			EM0 = All 5.9L	DBB = All Manual Transmissions
			EV0 = All 4.7L	

Seat Front, Split Bench, Trim Code [QL]
Figure IAN-525

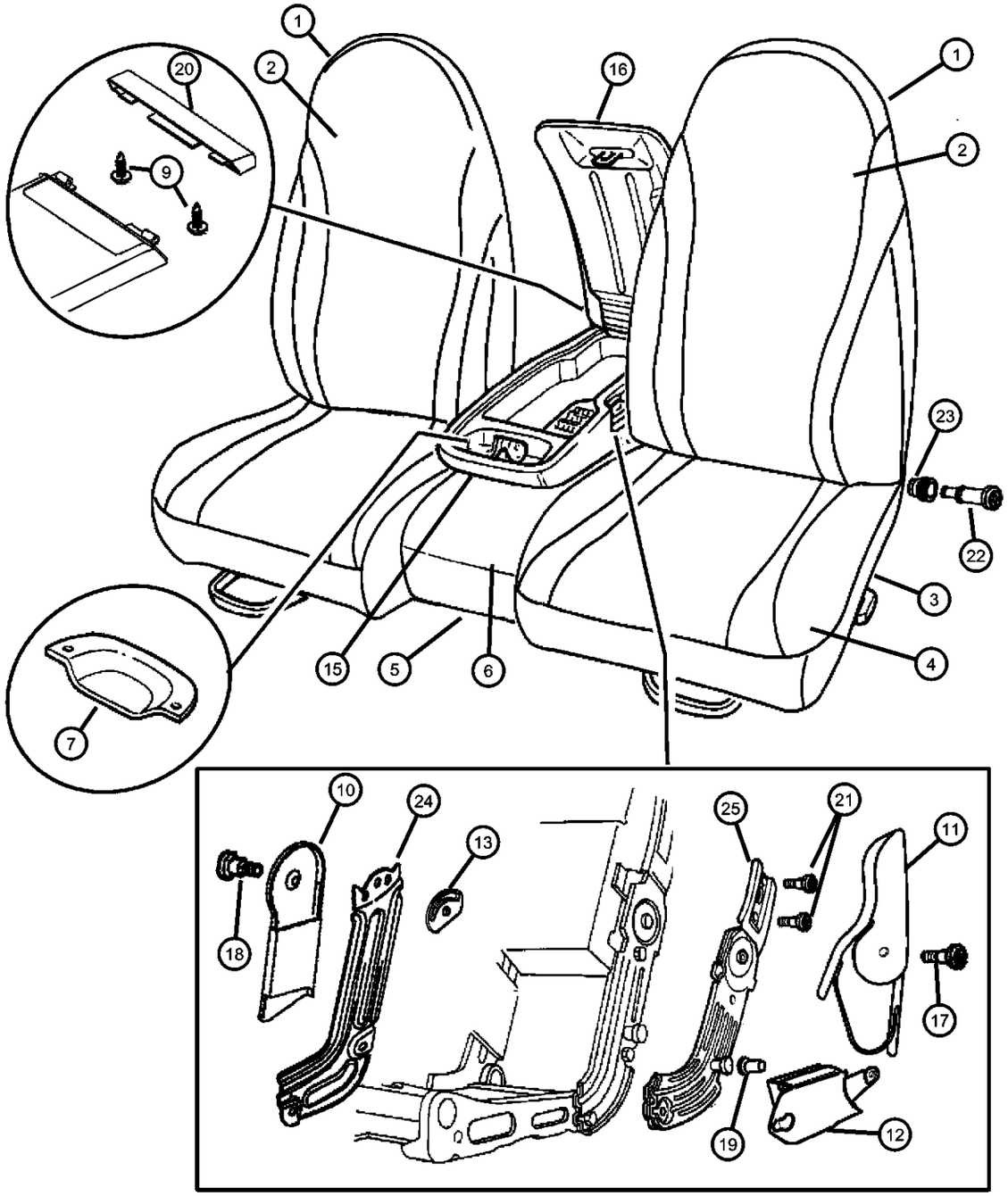

ITEM	PART NUMBER	QTY	LINE	SERIES	BODY	ENGINE	TRANS	TRIM	DESCRIPTION
1									BACK, Front Seat
	0XC801DVAA	1			84			*QL	[DV], Passenger
	0XC801L5AA	1			84			*QL	[L5], Passenger
	0XC811DVAA	1			84			*QL	[DV], Driver
	0XC811L5AA	1			84			*QL	[L5], Driver
2									COVER, Seat Back
	0UH721DVAA	1			84			*QL	[DV], Passenger
	0UH721L5AA	1			84			*QL	[L5], Passenger
	0WX291DVAA	1			84			*QL	[DV], Driver
	0WX291L5AA	1			84			*QL	[L5], Driver
3									CUSHION, Front Seat, Contains: Frame, Recliner, Cable and Trim Cover
	0XC761DVAA	1			84			*QL	[DV], Passenger
	0XC761L5AA	1			84			*QL	[L5], Passenger
	0XC771DVAA	1			84			*QL	[DV], Driver
	0XC771L5AA	1			84			*QL	[L5], Driver
4									COVER, Front Seat Cushion
	0UH681DVAA	1			84			*QL	[DV], Passenger
	0UH681L5AA	1			84			*QL	[L5], Passenger
	0UH691DVAA	1			84			*QL	[DV], Driver
	0UH691L5AA	1			84			*QL	[L5], Driver
5									CUSHION, Front Seat, 20%
	0XC751DVAA	1			84			*QL	[DV]
	0XC751L5AA	1			84			*QL	[L5]
6									COVER, Front Seat Cushion, 20%
	0XC781DVAA	1			84			*QL	[DV]
	0XC781L5AA	1			84			*QL	[L5]
7	05015008AA	1			84			*QL	BEZEL, Armrest
-8	05015638AA	1			84			*QL	REPAIR KIT, Armrest latch, Contains : Rivet, Handle and Locking Mechinism
9	04883529AA	2			84			*QL	SCREW, Arm Rest Bracket
10	04773418	1			84			*QL	COVER, Bracket

DAKOTA (AN)

SERIES	LINE	BODY	ENGINE	TRANSMISSION
L = Dakota (All)	1 = Dakota 2WD 5 = Dakota 4WD	61 = Regular Cab (112 WB) 31 = Club Cab (131 WB) 84 = Quad Cab (131 WB)	EPE = 2.5L 4 Cylinder EHC = 3.9L 6 Cylinder EML = 5.0L 8 Cylinder EVA = 4.7L Magnum V8 EP0 = All 2.5L EH0 = All 3.9L EM0 = All 5.9L EV0 = All 4.7L	DGK = 4 Speed Automatic 42RE DGT = 4 Speed Automatic 46RE DDC = 5 Speed HD Manual DDK = 5 Speed HD Manual DG4 = Multispeed Automatic 45RFE DG0 = All Automatic Transmissions DBB = All Manual Transmissions

Seat Front, Split Bench, Trim Code [QL]
Figure IAN-525

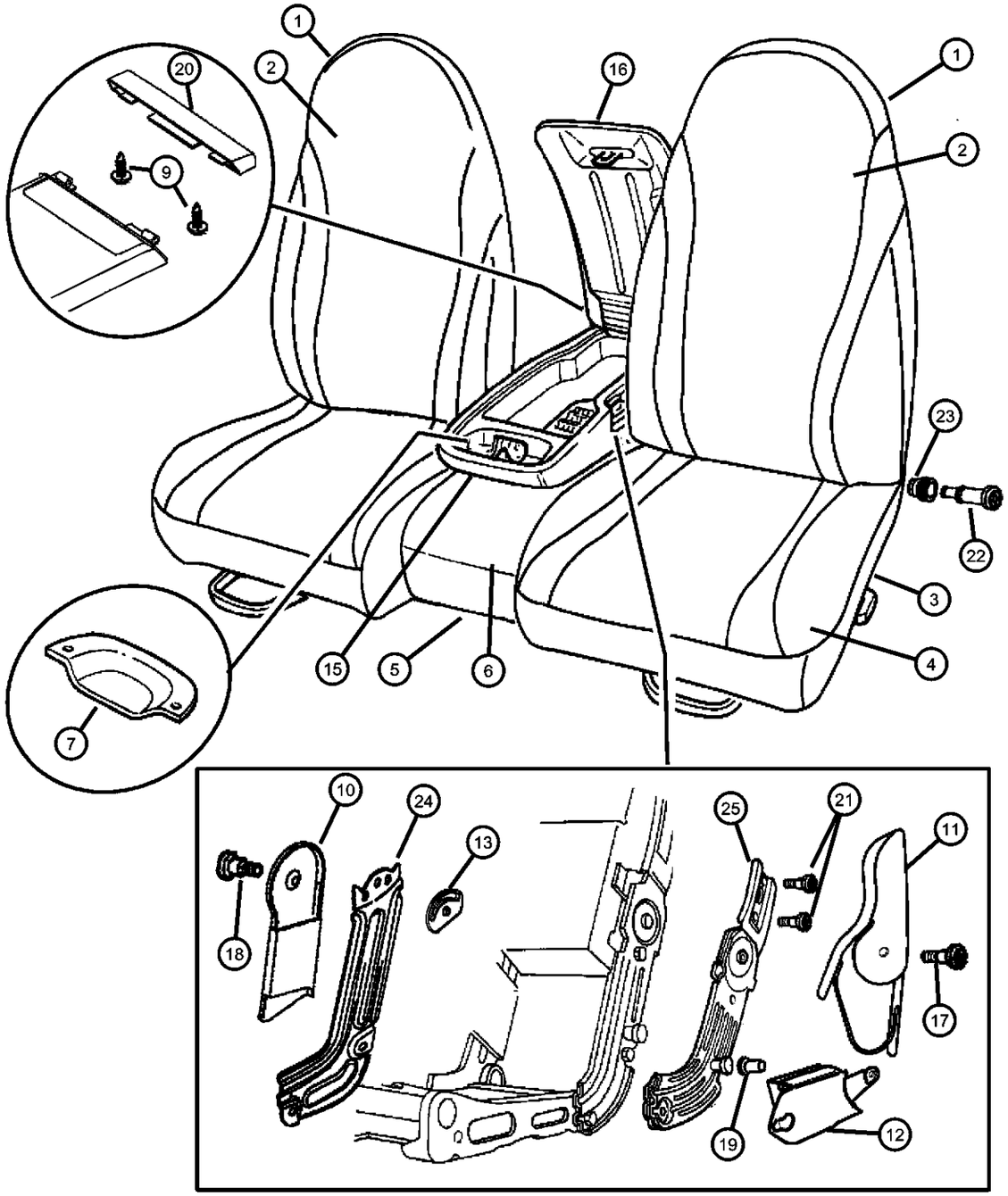

ITEM	PART NUMBER	QTY	LINE	SERIES	BODY	ENGINE	TRANS	TRIM	DESCRIPTION
11	05017734AA	1			84			*QL	COVER, Seat latchUpper
12	05016165AB	1			84			*QL	COVER, Seat latchLower
13	04886420AA	1			84			*QL	BUSHING, Seat Inertia Latch
-14	04886420AA	1							ARMREST, Seat, (NOT SERVICED)
15									BASE, Armrest, With Liner Insert
	0XC791DVAA	1			84			*QL	[DV]
	0XC791L5AA	1			84			*QL	[L5]
16									LID, Armrest Bin
	0UR381DVAA	1			84			*QL	[DV]
	0UR381L5AA	1			84			*QL	[L5]
17	05015749AA	1			84			*QL	SCREW, Pivot Bracket
18	04883535AA	1			84			*QL	BOLT, Shoulder
19	04883562AA	1			84			*QL	WASHER, Upper Pivot
20									COVER, Hinge
	0SD741DVAA	1			84			*QL	[DV]
	0SD741L5AA	1			84			*QL	[L5]
21	04883540AA	12			84			*QL	BOLT, M8x1.25x25
22	05086165AA	4			84			*QL	BOLT, Seat, Cushion to Frame
23	04886477AA	1			84			*QL	BUSHING, Pivot
24	05086976AA	1			84			*QL	BRACKET, Pivot
25	05086977AA	1			84			*QL	LATCH
-26									PIN, Armrest Lid Hinge, Consists Of: Detent, Lid Hinge, Pin, Armrest Hinge, Detent, Bin Hinge, Spring, Armrest Hinge, Screw, Armrest Hinge
	05134381AA	1			84			*QL	
		1			31			*QL	

DAKOTA (AN)

SERIES	LINE	BODY	ENGINE	TRANSMISSION
L = Dakota (All)	1 = Dakota 2WD 5 = Dakota 4WD	61 = Regular Cab (112 WB) 31 = Club Cab (131 WB) 84 = Quad Cab (131 WB)	EPE = 2.5L 4 Cylinder EHC = 3.9L 6 Cylinder EML = 5.0L 8 Cylinder EVA = 4.7L Magnum V8 EP0 = All 2.5L EH0 = All 3.9L EM0 = All 5.9L EV0 = All 4.7L	DGK = 4 Speed Automatic 42RE DGT = 4 Speed Automatic 46RE DDC = 5 Speed HD Manual DDK = 5 Speed HD Manual DG4 = Multispeed Automatic 45RFE DG0 = All Automatic Transmissions DBB = All Manual Transmissions

Seat, Front, Bucket Seats,Trim Code [K5]
Figure IAN-530

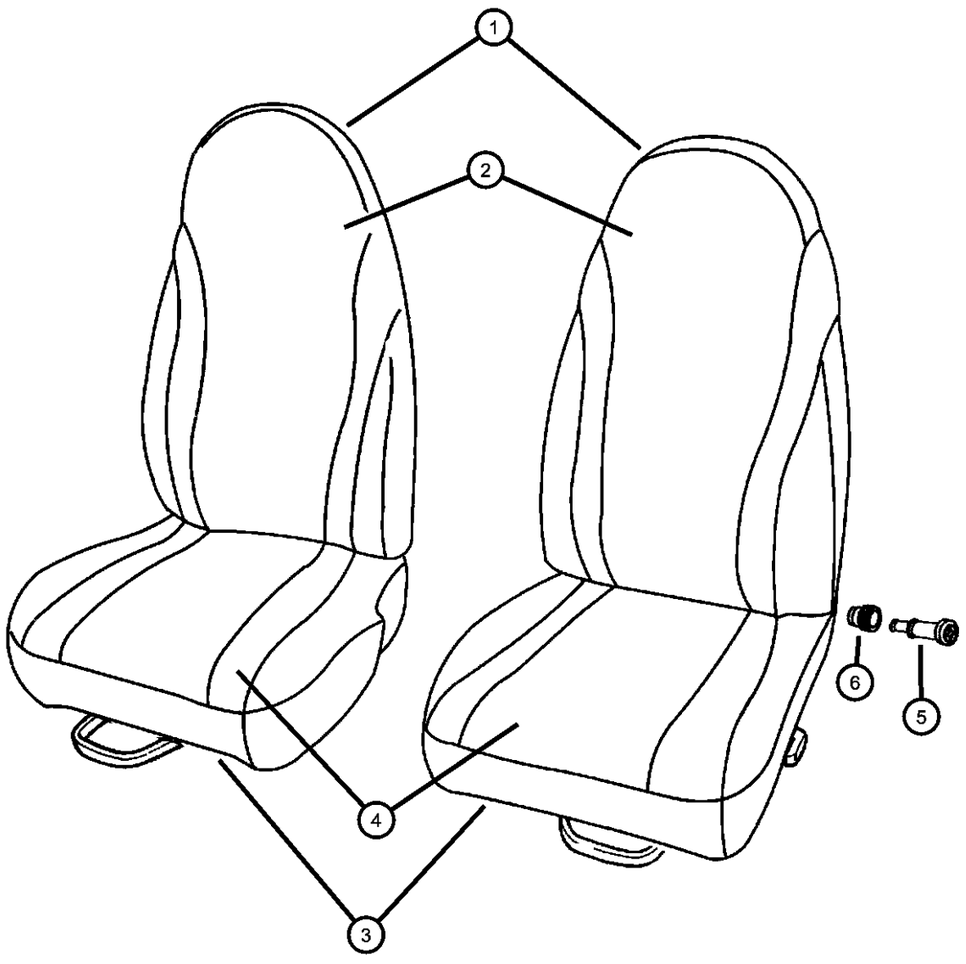

ITEM	PART NUMBER	QTY	LINE	SERIES	BODY	ENGINE	TRANS	TRIM	DESCRIPTION
1									BACK, Front Seat
	0WP821DVAA	1			84			*K5	[DV], Passenger
	0WP821L5AA	1			84			*K5	[L5], Passenger
	0WP831DVAA	1			84			*K5	[DV], Driver, Power
	0WP831L5AA	1			84			*K5	[L5], Driver, Power
	0WP901DVAA	2			61			*K5	[DV], Passenger And Driver
	0WP901L5AA	2			61			*K5	[L5], Passenger And Driver
	0WP911DVAA	1			84			*K5	[DV], Driver, Manual
	0WP911L5AA	1			84			*K5	[L5], Driver, Manual
	0WP941DVAA	1			31			*K5	[DV], Passenger
	0WP941L5AA	1			31			*K5	[L5], Passenger
	0WP951DVAA	1			31			*K5	[DV], Driver, Power
	0WP951L5AA	1			31			*K5	[L5], Driver, Power
	0WP971DVAA	1			31			*K5	[DV], Driver, Manual
	0WP971L5AA	1			31			*K5	[L5], Driver, Manual
2									COVER, Seat Back
	0WP841DVAA	1			84			*K5	[DV], Passenger
	0WP841L5AA	1			84			*K5	[L5], Passenger
	0WP851DVAA	1			84			*K5	[DV], Driver
	0WP851L5AA	1			84			*K5	[L5], Driver
	0WP881DVAA	2			31			*K5	[DV], Passenger And Driver
		2			61			*K5	[DV], Passenger And Driver
	0WP881L5AA	2			31			*K5	[L5], Passenger And Driver
		2			61			*K5	[L5], Passenger And Driver
3									CUSHION, Front Seat, Contains: Frame, Recliner, Cable and Trim Cover
	0WP781DVAA	1			84			*K5	[DV], Passenger
	0WP781L5AA	1			84			*K5	[L5], Passenger
	0WP791DVAA	1			84			*K5	[DV], Driver, Power
	0WP791L5AA	1			84			*K5	[L5], Driver, Power
	0WP891DVAA	1			84			*K5	[DV], Driver, Manual
	0WP891L5AA	1			84			*K5	[L5], Driver, Manual
	0WP921DVAA	1			31			*K5	[DV], Passenger

DAKOTA (AN)

SERIES	LINE	BODY	ENGINE	TRANSMISSION
L = Dakota (All)	1 = Dakota 2WD 5 = Dakota 4WD	61 = Regular Cab (112 WB) 31 = Club Cab (131 WB) 84 = Quad Cab (131 WB)	EPE = 2.5L 4 Cylinder EHC = 3.9L 6 Cylinder EML = 5.0L 8 Cylinder EVA = 4.7L Magnum V8 EP0 = All 2.5L EH0 = All 3.9L EM0 = All 5.9L EV0 = All 4.7L	DGK = 4 Speed Automatic 42RE DGT = 4 Speed Automatic 46RE DDC = 5 Speed HD Manual DDK = 5 Speed HD Manual DG4 = Multispeed Automatic 45RFE DG0 = All Automatic Transmissions DBB = All Manual Transmissions

Seat, Front, Bucket Seats,Trim Code [K5]
Figure IAN-530

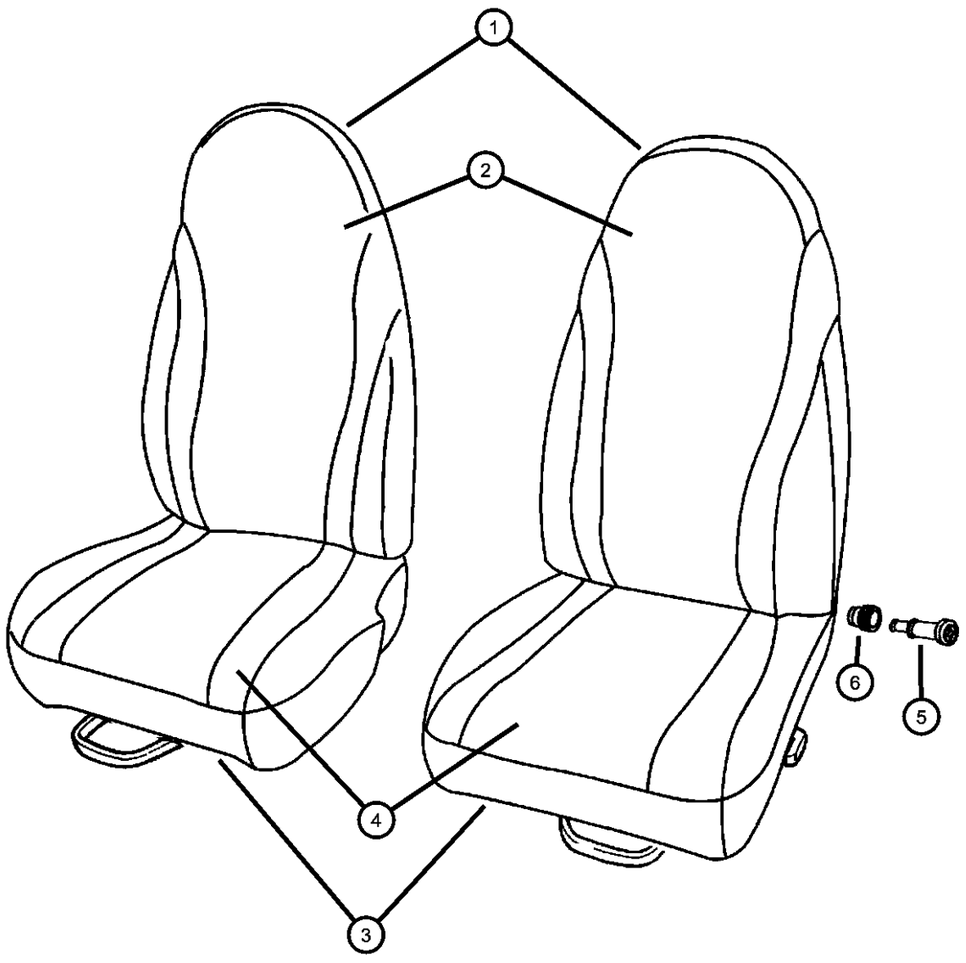

ITEM	PART NUMBER	QTY	LINE	SERIES	BODY	ENGINE	TRANS	TRIM	DESCRIPTION
	0WP921L5AA	1			31			*K5	[L5], Passenger
	0WP931DVAA	1			31			*K5	[DV], Driver, Power
	0WP931L5AA	1			31			*K5	[L5], Driver, Power
	0WP991DVAA	1			31			*K5	[DV], Driver, Manual
	0WP991L5AA	1			31			*K5	[L5], Driver, Manual
	0WQ001DVAA	1			61			*K5	[DV], Passenger
	0WQ001L5AA	1			61			*K5	[L5], Passenger
	0WQ011DVAA	1			61			*K5	[DV], Driver
	0WQ011L5AA	1			61			*K5	[L5], Driver
4									COVER, Front Seat Cushion
	0WP771DVAA	1			84			*K5	[DV], Driver, Manual
		1			31			*K5	[DV], Driver, Manual
		1			61			*K5	[DV], Driver
	0WP771L5AA	1			84			*K5	[L5], Driver, Manual
		1			31			*K5	[L5], Driver, Manual
		1			61			*K5	[L5], Driver
	0WP801DVAA	1			84			*K5	[DV], Passenger
		1			31			*K5	[DV], Passenger
		1			61			*K5	[DV], Passenger
	0WP801L5AA	1			84			*K5	[L5], Passenger
		1			31			*K5	[L5], Passenger
		1			61			*K5	[L5], Passenger
	0WP811DVAA	1			84			*K5	[DV], Driver, Power
		1			31			*K5	[DV], Driver, Power
	0WP811L5AA	1			84			*K5	[L5], Driver, Power
		1			31			*K5	[L5], Driver, Power
5									BOLT, Seat, Cushion to Frame
	05086165AA	4			84			*K5	
		4			31			*K5	
		4			61			*K5	
6									BUSHING, Pivot
	04886477AA	4			31			*K5	

DAKOTA (AN)

SERIES	LINE	BODY	ENGINE	TRANSMISSION
L = Dakota (All)	1 = Dakota 2WD 5 = Dakota 4WD	61 = Regular Cab (112 WB) 31 = Club Cab (131 WB) 84 = Quad Cab (131 WB)	EPE = 2.5L 4 Cylinder EHC = 3.9L 6 Cylinder EML = 5.0L 8 Cylinder EVA = 4.7L Magnum V8 EP0 = All 2.5L EH0 = All 3.9L EM0 = All 5.9L EV0 = All 4.7L	DGK = 4 Speed Automatic 42RE DGT = 4 Speed Automatic 46RE DDC = 5 Speed HD Manual DDK = 5 Speed HD Manual DG4 = Multispeed Automatic 45RFE DG0 = All Automatic Transmissions DBB = All Manual Transmissions

Seat, Front, Bucket Seats,Trim Code [K5]
Figure IAN-530

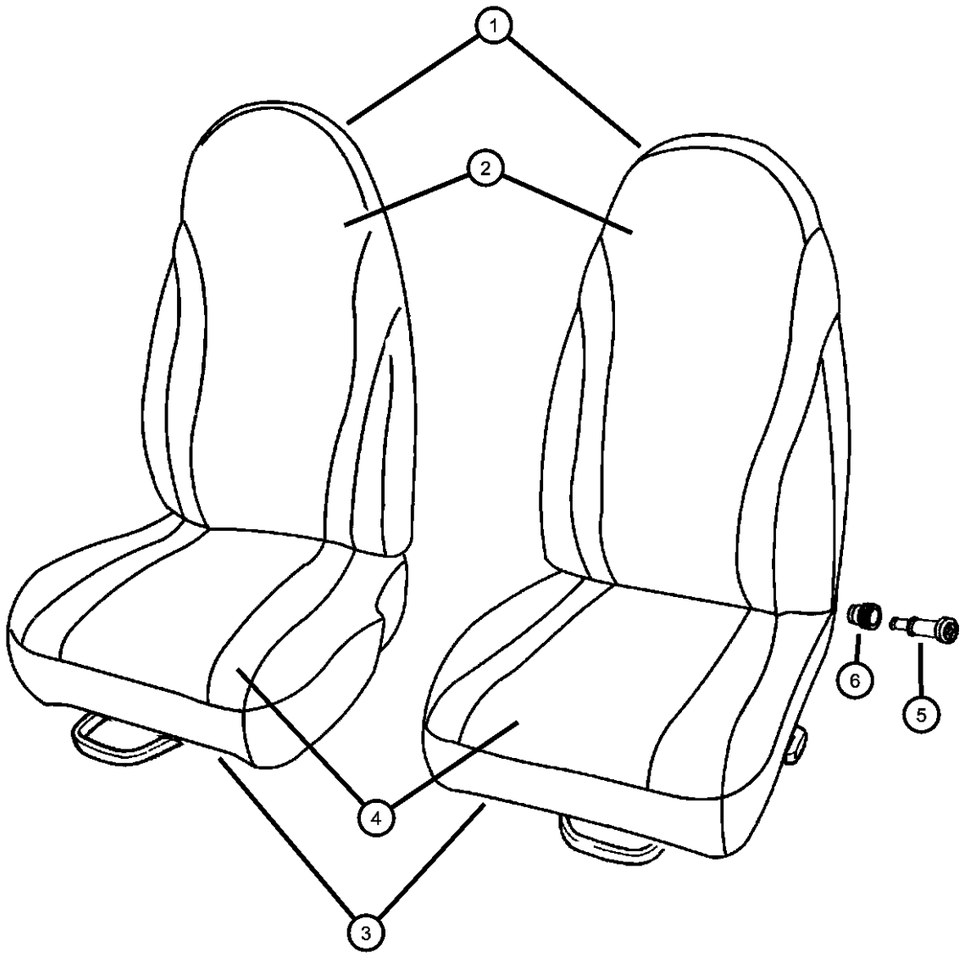

ITEM	PART NUMBER	QTY	LINE	SERIES	BODY	ENGINE	TRANS	TRIM	DESCRIPTION
		4			84			*K5	
		4			61			*K5	

DAKOTA (AN)

SERIES	LINE	BODY	ENGINE	TRANSMISSION
L = Dakota (All)	1 = Dakota 2WD	61 = Regular Cab (112 WB)	EPE = 2.5L 4 Cylinder	DGK = 4 Speed Automatic 42RE
	5 = Dakota 4WD	31 = Club Cab (131 WB)	EHC = 3.9L 6 Cylinder	DGT = 4 Speed Automatic 46RE
		84 = Quad Cab (131 WB)	EML = 5.0L 8 Cylinder	DDC = 5 Speed HD Manual
			EVA = 4.7L Magnum V8	DDK = 5 Speed HD Manual
			EP0 = All 2.5L	DG4 = Multispeed Automatic 45RFE
			EH0 = All 3.9L	DG0 = All Automatic Transmissions
			EM0 = All 5.9L	DBB = All Manual Transmissions
			EV0 = All 4.7L	

Seat, Front Bucket, Trim Code [LJ]
Figure IAN-540

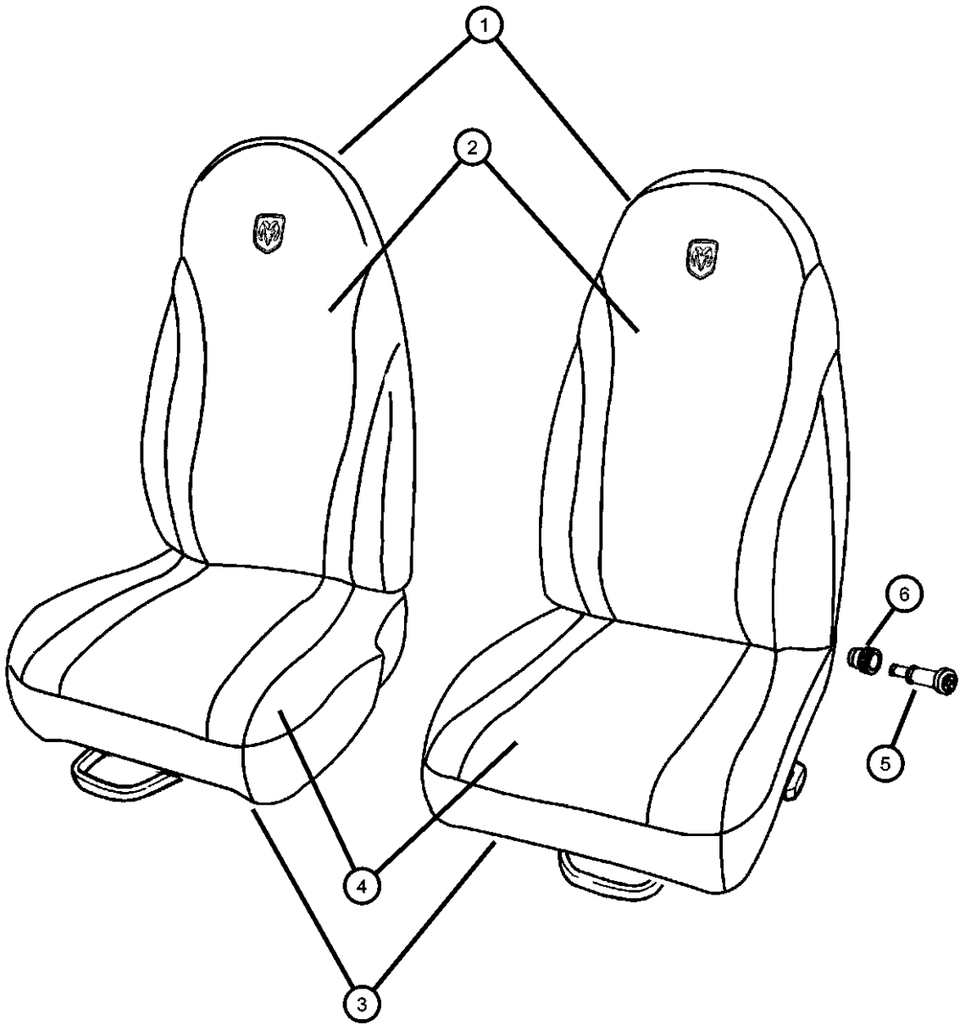

ITEM	PART NUMBER	QTY	LINE	SERIES	BODY	ENGINE	TRANS	TRIM	DESCRIPTION
1									BACK, Front Seat
	0UH701DVAA	1			84			*LJ	[DV], Right
	0UH701L5AA	1			84			*LJ	[L5], Right
	0WX281DVAA	1			84			*LJ	[DV], Left
	0WX281L5AA	1			84			*LJ	[L5], Left
2									COVER, Seat Back
	0UH721DVAA	1			84			*LJ	[DV], Right
	0UH721L5AA	1			84			*LJ	[L5], Right
	0WX291DVAA	1			84			*LJ	[DV], Left
	0WX291L5AA	1			84			*LJ	[L5], Left
3									CUSHION, Front Seat, Contains: Frame, Recliner, Cable and Trim Cover
	0UH661DVAA	1			84			*LJ	[DV], Right
	0UH661L5AA	1			84			*LJ	[L5], Right
	0UH671DVAA	1			84			*LJ	[DV], Left
	0UH671L5AA	1			84			*LJ	[L5], Left
4									COVER, Front Seat Cushion
	0UH681DVAA	1			84			*LJ	[DV], Right
	0UH681L5AA	1			84			*LJ	[L5], Right
	0UH691DVAA	1			84			*LJ	[DV], Left
	0UH691L5AA	1			84			*LJ	[L5], Left
5	05086165AA	4			84			*LJ	BOLT, Seat, Cushion to Frame
6	04886477AA	1			84			*LJ	BUSHING, Pivot

DAKOTA (AN)

SERIES	LINE	BODY	ENGINE	TRANSMISSION
L = Dakota (All)	1 = Dakota 2WD	61 = Regular Cab (112 WB)	EPE = 2.5L 4 Cylinder	DGK = 4 Speed Automatic 42RE
	5 = Dakota 4WD	31 = Club Cab (131 WB)	EHC = 3.9L 6 Cylinder	DGT = 4 Speed Automatic 46RE
		84 = Quad Cab (131 WB)	EML = 5.0L 8 Cylinder	DDC = 5 Speed HD Manual
			EVA = 4.7L Magnum V8	DDK = 5 Speed HD Manual
			EP0 = All 2.5L	DG4 = Multispeed Automatic 45RFE
			EH0 = All 3.9L	DG0 = All Automatic Transmissions
			EM0 = All 5.9L	DBB = All Manual Transmissions
			EV0 = All 4.7L	

Rear Seat And Attaching Parts Trim Code P9, K5
Figure IAN-610

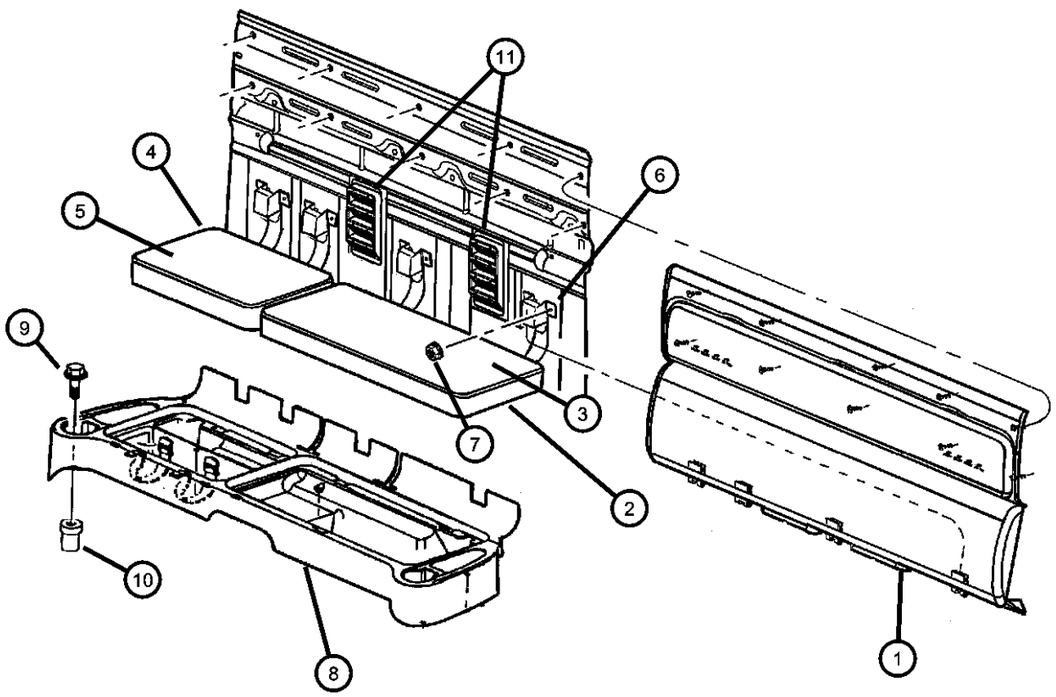

ITEM	PART NUMBER	QTY	LINE	SERIES	BODY	ENGINE	TRANS	TRIM	DESCRIPTION
1									BOLSTER, Cab Back Panel
	5GP18WL5AE	1			31			*O0	[L5], Cloth
	5GP18XDVAE	1			31			*O0	[DV], Cloth
	5JL72WL5AA	1			31			*QL	L5], With Leather Seats
	5JL72XDVAA	1			31			*QL	[DV], With Leather Seats
2									CUSHION, Rear Seat, 60%, Includes Hinges
	0TG251L5AA	1			31			*K5	[L5]
		1			31			*P9	[L5]
	0TG25XDVAA	1			31			*K5	[DV]
		1			31			*P9	[DV]
3									COVER, Rear Seat Cushion, 60%
	0TG271L5AA	1			31			*K5	[L5]
		1			31			*P9	[L5]
	0TG27XDVAA	1			31			*K5	[DV]
		1			31			*P9	[DV]
4									CUSHION, Rear Seat, 40%, Includes Hinges
	0TG241L5AA	1			31			*K5	[L5]
		1			31			*P9	[L5]
	0TG24XDVAA	1			31			*K5	[DV]
		1			31			*P9	[DV]
5									COVER, Rear Seat Cushion, 40%
	0TG261L5AA	1			31			*K5	[L5]
		1			31			*P9	[L5]
	0TG26XDVAA	1			31			*K5	[DV]
		1			31			*P9	[DV]
6	06505010AA	8			31				BOLT
7	06100051	8			31				NUT AND WASHER, Hex Nut-Coned Washer, M8 x 1.25
8	5EM01JX8AG	1			31			*O0	BASE, Load Floor
9	06100568	5			31				BOLT AND WASHER, Implement Attaching
10	06503910	5			31				NUT
11	55056245AA	2							EXHAUSTER, Quarter Panel

DAKOTA (AN)

SERIES	LINE	BODY	ENGINE	TRANSMISSION
L = Dakota (All)	1 = Dakota 2WD 5 = Dakota 4WD	61 = Regular Cab (112 WB) 31 = Club Cab (131 WB) 84 = Quad Cab (131 WB)	EPE = 2.5L 4 Cylinder EHC = 3.9L 6 Cylinder EML = 5.0L 8 Cylinder EVA = 4.7L Magnum V8 EP0 = All 2.5L EH0 = All 3.9L EM0 = All 5.9L EV0 = All 4.7L	DGK = 4 Speed Automatic 42RE DGT = 4 Speed Automatic 46RE DDC = 5 Speed HD Manual DDK = 5 Speed HD Manual DG4 = Multispeed Automatic 45RFE DG0 = All Automatic Transmissions DBB = All Manual Transmissions

Rear Seat, Quad Cab
Figure IAN-620

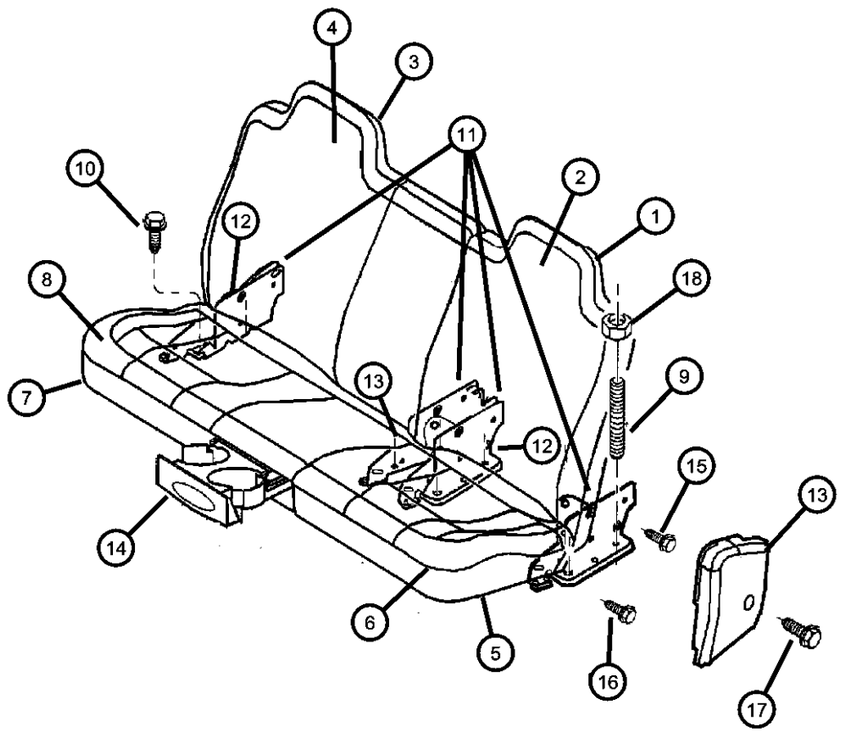

ITEM	PART NUMBER	QTY	LINE	SERIES	BODY	ENGINE	TRANS	TRIM	DESCRIPTION
1									SEAT BACK, Rear, 40%
	0UH831DVAA	1			84			*LJ	[DV], Leather, Up to 12/13/01
		1			84			*QL	[DV], Leather, Up to 12/13/01
	0UH831L5AA	1			84			*LJ	[L5], Leather, Up to 12/13/01
		1			84			*QL	[L5], Leather, Up to 12/13/01
	0WP591DVAA	1			84			*K5	[DV]
		1			84			*P9	[DV]
	0WP591L5AA	1			84			*K5	[L5]
		1			84			*P9	[L5]
	0XF891DVAA	1			84			*LJ	[DV], Vinyl, After 12/13/01
		1			84			*QL	[DV], Vinyl, After 12/13/01
	0XF891L5AA	1			84			*LJ	[L5], Vinyl, After 12/13/01
		1			84			*QL	[L5], Vinyl, After 12/13/01
2									COVER, Seat Back, 40%
	0UH851DVAA	1			84			*LJ	[DV], Leather, Up to 12/13/01
		1			84			*QL	[DV], Leather, Up to 12/13/01
	0UH851L5AA	1			84			*LJ	[L5], Leather, Up to 12/13/01
		1			84			*QL	[L5], Leather, Up to 12/13/01
	0WP631DVAA	1			84			*K5	[DV]
		1			84			*P9	[DV]
	0WP631L5AA	1			84			*K5	[L5]
		1			84			*P9	[L5]
	0XF911DVAA	1			84			*LJ	[DV], Vinyl, After 12/13/01
		1			84			*QL	[DV], Vinyl, After 12/13/01
	0XF911L5AA	1			84			*LJ	[L5], Vinyl, After 12/13/01
		1			84			*QL	[L5], Vinyl, After 12/13/01
3									SEAT BACK, Rear, 60%
	0UH821DVAA	1			84			*LJ	[DV], Leather, Up to 12/13/01
		1			84			*QL	[DV], Leather, Up to 12/13/01
	0UH821L5AA	1			84			*LJ	[L5], Leather, Up to 12/13/01
		1			84			*QL	[L5], Leather, Up to 12/13/01
	0WP581DVAA	1			84			*K5	[DV]
		1			84			*P9	[DV]

DAKOTA (AN)

SERIES	LINE	BODY	ENGINE	TRANSMISSION
L = Dakota (All)	1 = Dakota 2WD	61 = Regular Cab (112 WB)	EPE = 2.5L 4 Cylinder	DGK = 4 Speed Automatic 42RE
	5 = Dakota 4WD	31 = Club Cab (131 WB)	EHC = 3.9L 6 Cylinder	DGT = 4 Speed Automatic 46RE
		84 = Quad Cab (131 WB)	EML = 5.0L 8 Cylinder	DDC = 5 Speed HD Manual
			EVA = 4.7L Magnum V8	DDK = 5 Speed HD Manual
			EP0 = All 2.5L	DG4 = Multispeed Automatic 45RFE
			EH0 = All 3.9L	DG0 = All Automatic Transmissions
			EM0 = All 5.9L	DBB = All Manual Transmissions
			EV0 = All 4.7L	

Rear Seat, Quad Cab
Figure IAN-620

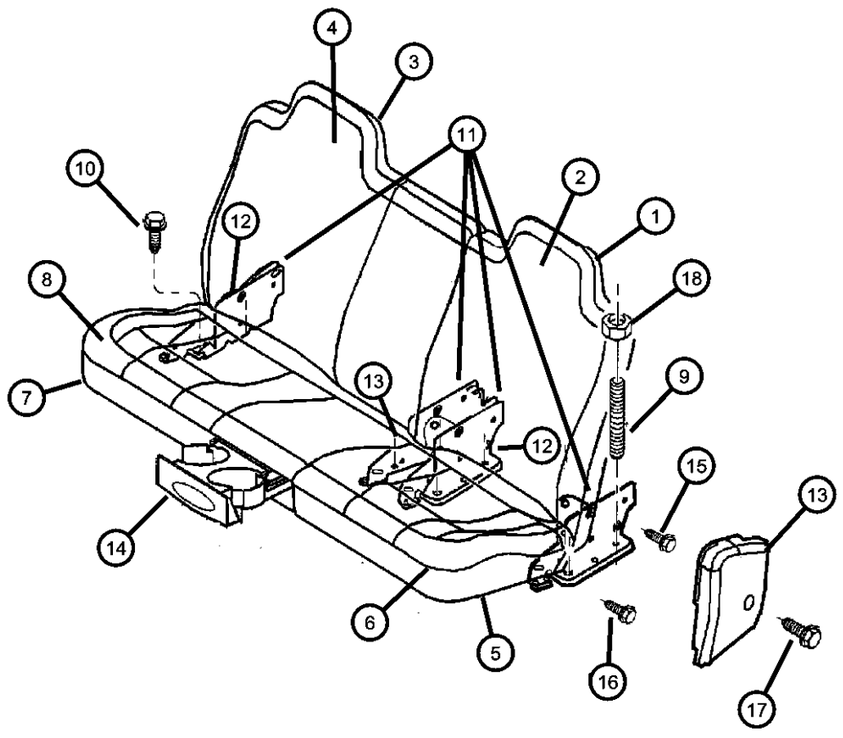

ITEM	PART NUMBER	QTY	LINE	SERIES	BODY	ENGINE	TRANS	TRIM	DESCRIPTION
	0WP581L5AA	1			84			*P9	[L5]
		1			84			*K5	[L5]
	0XF881DVAA	1			84			*LJ	[DV], Vinyl, After 12/13/01
		1			84			*QL	[DV], Vinyl, After 12/13/01
	0XF881L5AA	1			84			*QL	[L5], Vinyl, After 12/13/01
		1			84			*LJ	[L5], Vinyl, After 12/13/01
4									COVER, Seat Back, 60%
	0UH841DVAA	1			84			*LJ	[DV], Leather, Up to 12/13/01
		1			84			*QL	[DV], Leather, Up to 12/13/01
	0UH841L5AA	1			84			*LJ	[L5], Leather, Up to 12/13/01
		1			84			*QL	[L5], Leather, Up to 12/13/01
	0WP621DVAA	1			84			*K5	[DV]
		1			84			*P9	[DV]
	0WP621L5AA	1			84			*K5	[L5]
		1			84			*P9	[L5]
	0XF901DVAA	1			84			*LJ	[DV], Vinyl, After 12/13/01
		1			84			*QL	[DV], Vinyl, After 12/13/01
	0XF901L5AA	1			84			*QL	[L5], Vinyl, After 12/13/01
		1			84			*LJ	[L5], Vinyl, After 12/13/01
5									CUSHION, Rear Seat, 40%
	0WP671DVAA	1			84			*P9	[DV]
		1			84			*K5	[DV]
	0WP671L5AA	1			84			*K5	[L5]
		1			84			*P9	[L5]
	0WX331DVAA	1			84			*LJ	[DV], Leather, Up to 12/13/01
		1			84			*QL	[DV], Leather, Up to 12/13/01
	0WX331L5AA	1			84			*LJ	[L5], Leather, Up to 12/13/01
		1			84			*QL	[L5], Leather, Up to 12/13/01
	0XF931DVAA	1			84			*LJ	[DV], Vinyl, After 12/13/01
		1			84			*QL	[DV], Vinyl, After 12/13/01
	0XF931L5AA	1			84			*QL	[L5], Vinyl, After 12/13/01
		1			84			*LJ	[L5], Vinyl, After 12/13/01

DAKOTA (AN)

SERIES	LINE	BODY	ENGINE	TRANSMISSION
L = Dakota (All)	1 = Dakota 2WD	61 = Regular Cab (112 WB)	EPE = 2.5L 4 Cylinder	DGK = 4 Speed Automatic 42RE
	5 = Dakota 4WD	31 = Club Cab (131 WB)	EHC = 3.9L 6 Cylinder	DGT = 4 Speed Automatic 46RE
		84 = Quad Cab (131 WB)	EML = 5.0L 8 Cylinder	DDC = 5 Speed HD Manual
			EVA = 4.7L Magnum V8	DDK = 5 Speed HD Manual
			EP0 = All 2.5L	DG4 = Multispeed Automatic 45RFE
			EH0 = All 3.9L	DG0 = All Automatic Transmissions
			EM0 = All 5.9L	DBB = All Manual Transmissions
			EV0 = All 4.7L	

Rear Seat, Quad Cab
Figure IAN-620

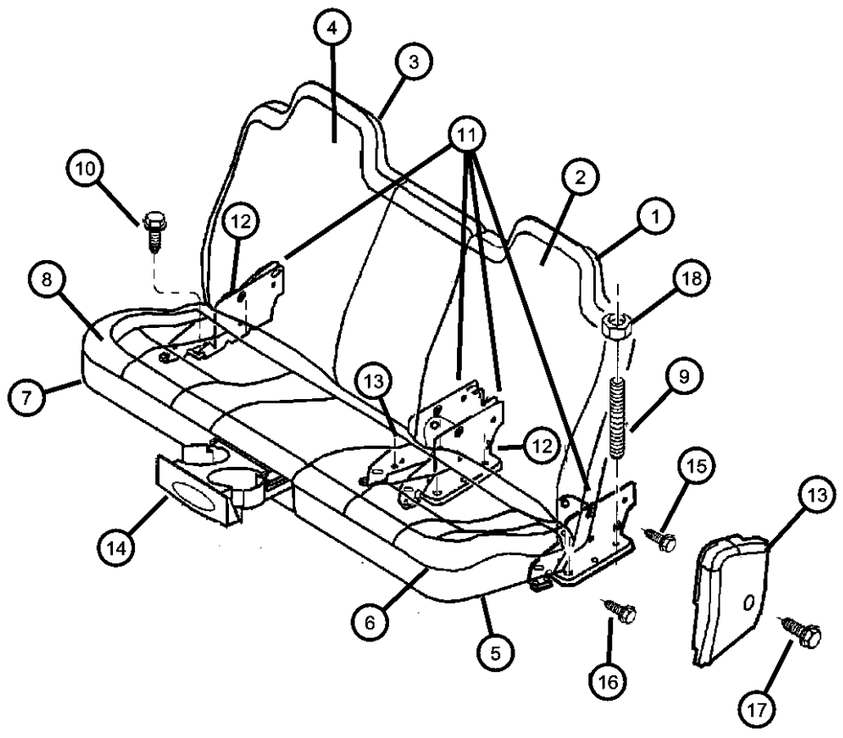

ITEM	PART NUMBER	QTY	LINE	SERIES	BODY	ENGINE	TRANS	TRIM	DESCRIPTION
6									COVER, Rear Seat Cushion, 40%
	0WP651DVAA	1			84			*P9	[DV]
		1			84			*K5	[DV]
	0WP651L5AA	1			84			*P9	[L5]
		1			84			*K5	[L5]
	0WX311DVAA	1			84			*LJ	[DV], Leather, Up to 12/13/01
		1			84			*QL	[DV], Leather, Up to 12/13/01
	0WX311L5AA	1			84			*LJ	[L5], Leather, Up to 12/13/01
		1			84			*QL	[L5], Leather, Up to 12/13/01
	0XF951DVAA	1			84			*LJ	[DV], Vinyl, After 12/13/01
		1			84			*QL	[DV], Vinyl, After 12/13/01
	0XF951L5AA	1			84			*LJ	[L5], Vinyl, After 12/13/01
		1			84			*QL	[L5], Vinyl, After 12/13/01
7									CUSHION, Rear Seat, 60%
	0WP661DVAA	1			84			*K5	[DV]
		1			84			*P9	[DV]
	0WP661L5AA	1			84			*K5	[L5]
		1			84			*P9	[L5]
	0WX321DVAA	1			84			*LJ	[DV], Leather, Up to 12/13/01
		1			84			*QL	[DV], Leather, Up to 12/13/01
	0WX321L5AA	1			84			*LJ	[L5], Leather, Up to 12/13/01
		1			84			*QL	[L5], Leather, Up to 12/13/01
	0XF921DVAA	1			84			*LJ	[DV], Vinyl, After 12/13/01
		1			84			*QL	[DV], Vinyl, After 12/13/01
	0XF921L5AA	1			84			*LJ	[L5], Vinyl, After 12/13/01
		1			84			*QL	[L5], Vinyl, After 12/13/01
8									COVER, Rear Seat Cushion, 60%
	0WP641DVAA	1			84			*P9	[DV]
		1			84			*K5	[DV]
	0WP641L5AA	1			84			*P9	[L5]
		1			84			*K5	[L5]
	0WX301DVAA	1			84			*LJ	[DV], Leather, Up to 12/13/01

DAKOTA (AN)

SERIES	LINE	BODY	ENGINE	TRANSMISSION
L = Dakota (All)	1 = Dakota 2WD	61 = Regular Cab (112 WB)	EPE = 2.5L 4 Cylinder	DGK = 4 Speed Automatic 42RE
	5 = Dakota 4WD	31 = Club Cab (131 WB)	EHC = 3.9L 6 Cylinder	DGT = 4 Speed Automatic 46RE
		84 = Quad Cab (131 WB)	EML = 5.0L 8 Cylinder	DDC = 5 Speed HD Manual
			EVA = 4.7L Magnum V8	DDK = 5 Speed HD Manual
			EP0 = All 2.5L	DG4 = Multispeed Automatic 45RFE
			EH0 = All 3.9L	DG0 = All Automatic Transmissions
			EM0 = All 5.9L	DBB = All Manual Transmissions
			EV0 = All 4.7L	

Rear Seat, Quad Cab
Figure IAN-620

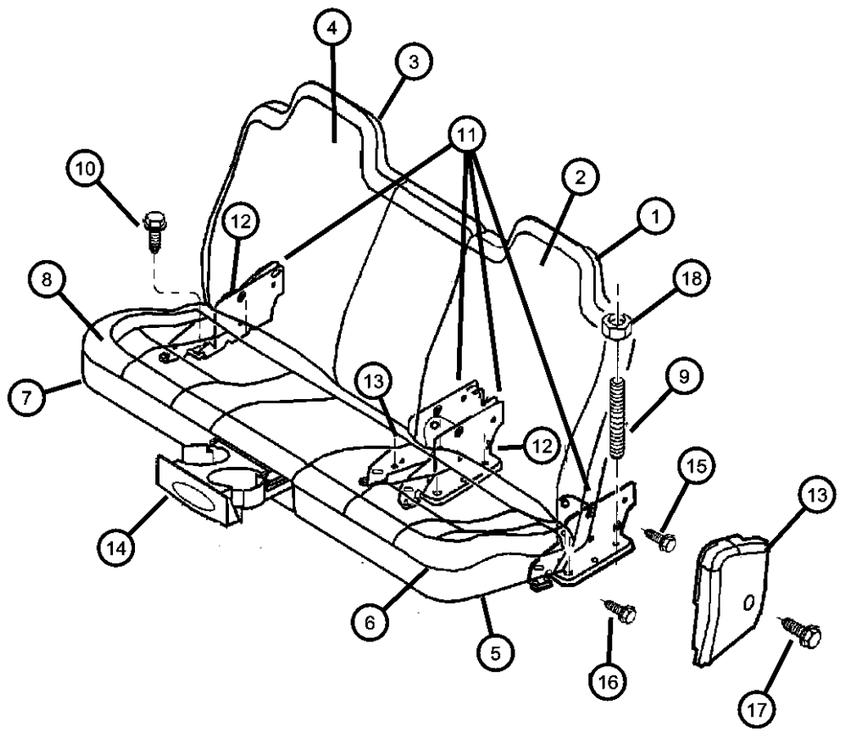

ITEM	PART NUMBER	QTY	LINE	SERIES	BODY	ENGINE	TRANS	TRIM	DESCRIPTION
		1			84			*QL	[DV], Leather, Up to 12/13/01
	0WX301L5AA	1			84			*LJ	[L5], Leather, Up to 12/13/01
		1			84			*QL	[L5], Leather, Up to 12/13/01
	0XF941DVAA	1			84			*LJ	[DV], Vinyl, After 12/13/01
		1			84			*QL	[DV], Vinyl, After 12/13/01
	0XF941L5AA	1			84			*LJ	[L5], Vinyl, After 12/13/01
		1			84			*QL	[L5], Vinyl, After 12/13/01
9	06506552AA	4			84				STUD
10	06507241AA	4							SCREW AND WASHER, Hex Head
11									LATCH, Seat
	05080780AA	1			84			*LJ	40%, Inboard
		1			84			*K5	40%, Inboard
		1			84			*P9	40%, Inboard
		1			84			*QL	40%, Inboard
	05080781AA	1			84			*K5	40%, Outboard
		1			84			*P9	40%, Outboard
		1			84			*LJ	40%, Outboard
		1			84			*QL	40%, Outboard
	05080782AA	1			84			*LJ	60%, Outboard
		1			84			*K5	60%, Outboard
		1			84			*P9	60%, Outboard
		1			84			*QL	60%, Outboard
	05080783AA	1			84			*K5	60%, Inboard
		1			84			*P9	60%, Inboard
		1			84			*LJ	60%, Inboard
		1			84			*QL	60%, Inboard
12									COVER, Seat latch
	05015794AA	2			84			*LJ	40% Inner, 60% Outer
		1			84			*K5	40% Inner, 60% Outer
		1			84			*P9	40% Inner, 60% Outer
		2			84			*QL	
13									COVER, Seat latch

DAKOTA (AN)

SERIES	LINE	BODY	ENGINE	TRANSMISSION
L = Dakota (All)	1 = Dakota 2WD	61 = Regular Cab (112 WB)	EPE = 2.5L 4 Cylinder	DGK = 4 Speed Automatic 42RE
	5 = Dakota 4WD	31 = Club Cab (131 WB)	EHC = 3.9L 6 Cylinder	DGT = 4 Speed Automatic 46RE
		84 = Quad Cab (131 WB)	EML = 5.0L 8 Cylinder	DDC = 5 Speed HD Manual
			EVA = 4.7L Magnum V8	DDK = 5 Speed HD Manual
			EP0 = All 2.5L	DG4 = Multispeed Automatic 45RFE
			EH0 = All 3.9L	DG0 = All Automatic Transmissions
			EM0 = All 5.9L	DBB = All Manual Transmissions
			EV0 = All 4.7L	

Rear Seat, Quad Cab
Figure IAN-620

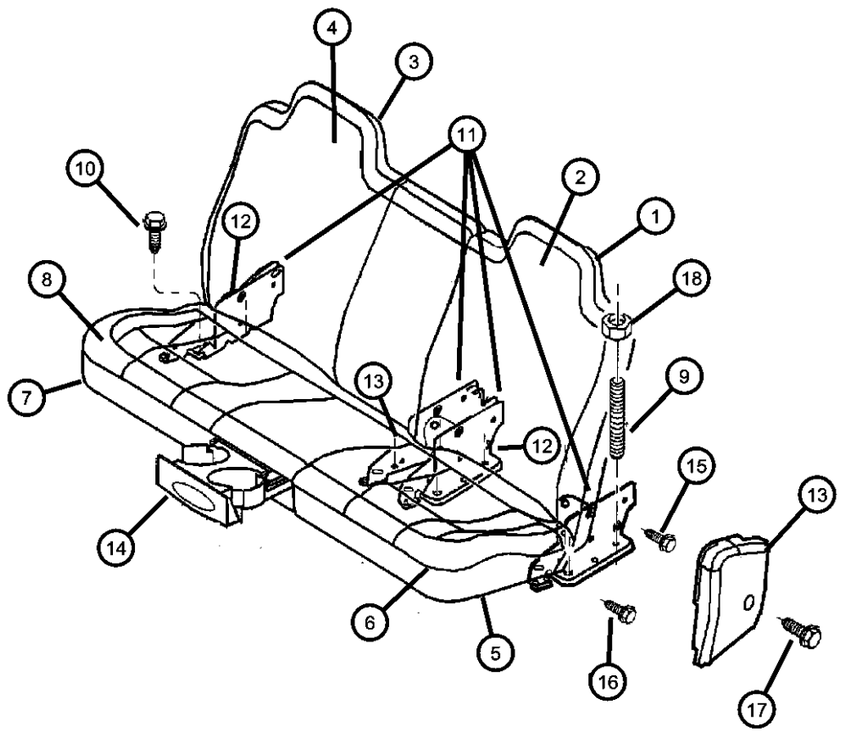

ITEM	PART NUMBER	QTY	LINE	SERIES	BODY	ENGINE	TRANS	TRIM	DESCRIPTION
	05015795AA	2			84			*LJ	40% Outer, 60% Inner
		1			84			*K5	40% Outer, 60% Inner
		1			84			*P9	40% Outer, 60% Inner
		2			84			*QL	40% Outer, 60% Inner
14									CUPHOLDER
	0UG291DVAA	1			84			*K5	[DV]
		1			84			*P9	[DV]
		1			84			*LJ	[DV]
		1			84			*QL	[DV]
	0UG291L5AA	1			84			*K5	[L5]
		1			84			*P9	[L5]
		1			84			*LJ	[L5]
		1			84			*QL	[L5]
15									BOLT, Shoulder
	05015817AA	4			84			*K5	
		4			84			*P9	
		4			84			*LJ	
		4			84			*QL	
16									SCREW, Tapping
	05015818AA	4			84			*LJ	Latch to Cushion 60%
		4			84			*K5	Latch to Cushion 60%
		4			84			*P9	Latch to Cushion 60%
		4			84			*QL	Latch to Cushion 60%
	05015819AA	4			84			*K5	Latch to Cushion 40%
		4			84			*P9	Latch to Cushion 40%
		4			84			*LJ	Latch to Cushion 40%
		4			84			*QL	Latch to Cushion 40%
17									SCREW
	05015749AA	1			84			*K5	
		1			84			*P9	
		1			84			*LJ	

DAKOTA (AN)

SERIES	LINE	BODY	ENGINE	TRANSMISSION
L = Dakota (All)	1 = Dakota 2WD	61 = Regular Cab (112 WB)	EPE = 2.5L 4 Cylinder	DGK = 4 Speed Automatic 42RE
	5 = Dakota 4WD	31 = Club Cab (131 WB)	EHC = 3.9L 6 Cylinder	DGT = 4 Speed Automatic 46RE
		84 = Quad Cab (131 WB)	EML = 5.0L 8 Cylinder	DDC = 5 Speed HD Manual
			EVA = 4.7L Magnum V8	DDK = 5 Speed HD Manual
			EP0 = All 2.5L	DG4 = Multispeed Automatic 45RFE
			EH0 = All 3.9L	DG0 = All Automatic Transmissions
			EM0 = All 5.9L	DBB = All Manual Transmissions
			EV0 = All 4.7L	

Rear Seat, Quad Cab
Figure IAN-620

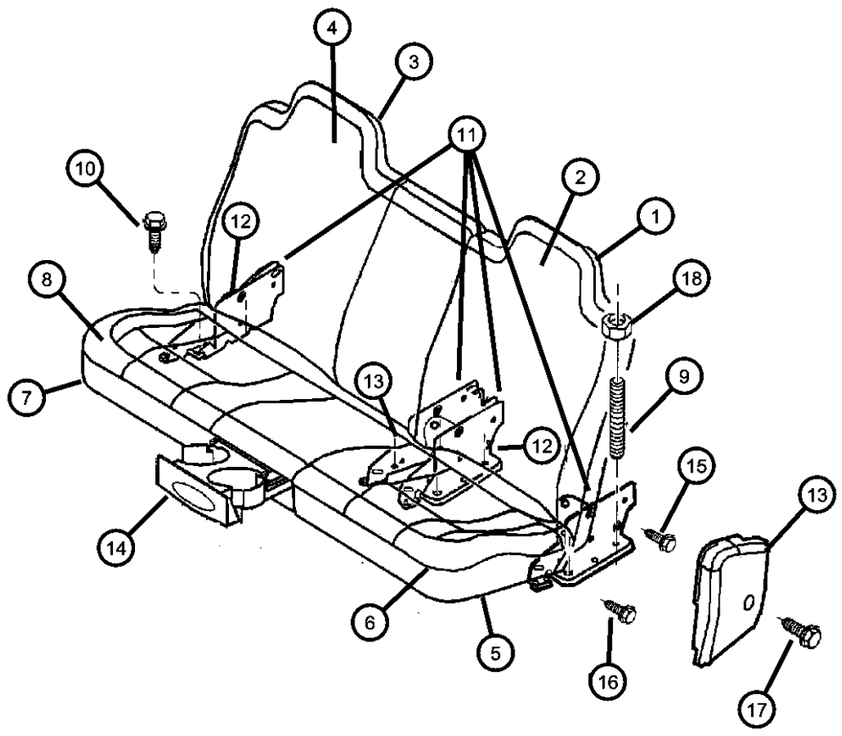

ITEM	PART NUMBER	QTY	LINE	SERIES	BODY	ENGINE	TRANS	TRIM	DESCRIPTION
		4			84			*QL	
18	06100055	4							NUT AND WASHER, Hex Nut-Coned Washer, M12 x 1.75

DAKOTA (AN)

SERIES	LINE	BODY	ENGINE	TRANSMISSION
L = Dakota (All)	1 = Dakota 2WD	61 = Regular Cab (112 WB)	EPE = 2.5L 4 Cylinder	DGK = 4 Speed Automatic 42RE
	5 = Dakota 4WD	31 = Club Cab (131 WB)	EHC = 3.9L 6 Cylinder	DGT = 4 Speed Automatic 46RE
		84 = Quad Cab (131 WB)	EML = 5.0L 8 Cylinder	DDC = 5 Speed HD Manual
			EVA = 4.7L Magnum V8	DDK = 5 Speed HD Manual
			EP0 = All 2.5L	DG4 = Multispeed Automatic 45RFE
			EH0 = All 3.9L	DG0 = All Automatic Transmissions
			EM0 = All 5.9L	DBB = All Manual Transmissions
			EV0 = All 4.7L	

AR = use ase required - = Non illustrrated part

Belts, Front Seat, Standard & Club Cabs
Figure IAN-710

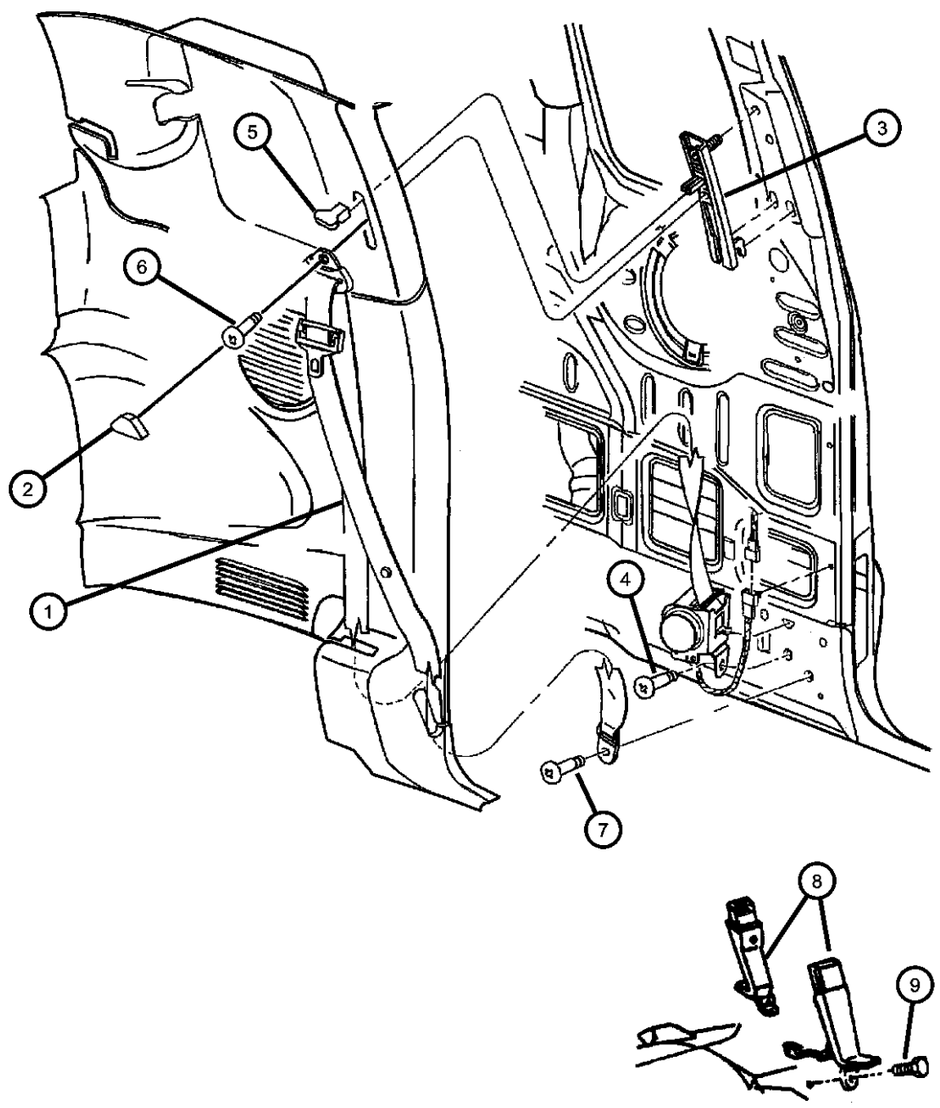

ITEM	PART NUMBER	QTY	LINE	SERIES	BODY	ENGINE	TRANS	TRIM	DESCRIPTION
1									SEAT BELT, Front Outer
	5GH581L5AC	1			31, 61			*O0	[L5], Right
	5GH58XD-VAC	1			31, 61			*O0	[DV], Right
	5GT081L5AE	1			31, 61			*O0	[L5], Left
	5GT08XDVAE	1			31, 61			*O0	[DV], Left
2	5GR26TL2AD	2			31, 61			*O0	COVER, Adjustable Turning Loop
3	55361000AA	2							ADJUSTER, Seat Belt Turning Loop
4	06036108AA	2			31, 61				SCREW, Pan Head
5	55350849AA	2							KNOB, Seat Belt Adjuster
6	06505803AA	2							SCREW, Shoulder
7	06036109AA	2			31, 61				SCREW, Pan Head
8									SEAT BELT, Front Inner
	5DW201L5AB	1			61			*G1	[L5], Bench Seat, Includes Center Assembly, Right
		1			61			*A2	[L5], Bench Seat, Includes Center Assembly, Right
	5EX261DVAB	1			61			*P9	[DV], Center Buckle
		1			31			*P9	[DV], Center Buckle
	5EX261L5AB	1			61			*P9	[L5], Center Buckle
		1			31			*P9	[L5], Center Buckle
	5EX271DV	1			31			*P9	[DV], Center Tip
		1			61			*P9	[DV], Center Tip
	5EX271L5	1			61			*P9	[L5], Center Tip
		1			31			*P9	[L5], Center Tip
	5GK301DVAC	2			61			*P9	[DV], Inboard
		2			61			*K5	[DV], Inboard
		2			31			*P9	[DV], Inboard
		2			31			*K5	[DV], Inboard
	5GK301L5AC	2			31			*K5	[L5], Inboard
		2			61			*P9	[L5], Inboard
		2			31			*P9	[L5], Inboard
		2			61			*K5	[L5], Inboard
	5GN231L5AB	1			61			*A2	[L5], Bench Seat, Includes Center Assembly, Left

DAKOTA (AN)

SERIES	LINE	BODY	ENGINE	TRANSMISSION
L = Dakota (All)	1 = Dakota 2WD 5 = Dakota 4WD	61 = Regular Cab (112 WB) 31 = Club Cab (131 WB) 84 = Quad Cab (131 WB)	EPE = 2.5L 4 Cylinder EHC = 3.9L 6 Cylinder EML = 5.0L 8 Cylinder EVA = 4.7L Magnum V8 EP0 = All 2.5L EH0 = All 3.9L EM0 = All 5.9L EV0 = All 4.7L	DGK = 4 Speed Automatic 42RE DGT = 4 Speed Automatic 46RE DDC = 5 Speed HD Manual DDK = 5 Speed HD Manual DG4 = Multispeed Automatic 45RFE DG0 = All Automatic Transmissions DBB = All Manual Transmissions

Belts, Front Seat, Standard & Club Cabs
Figure IAN-710

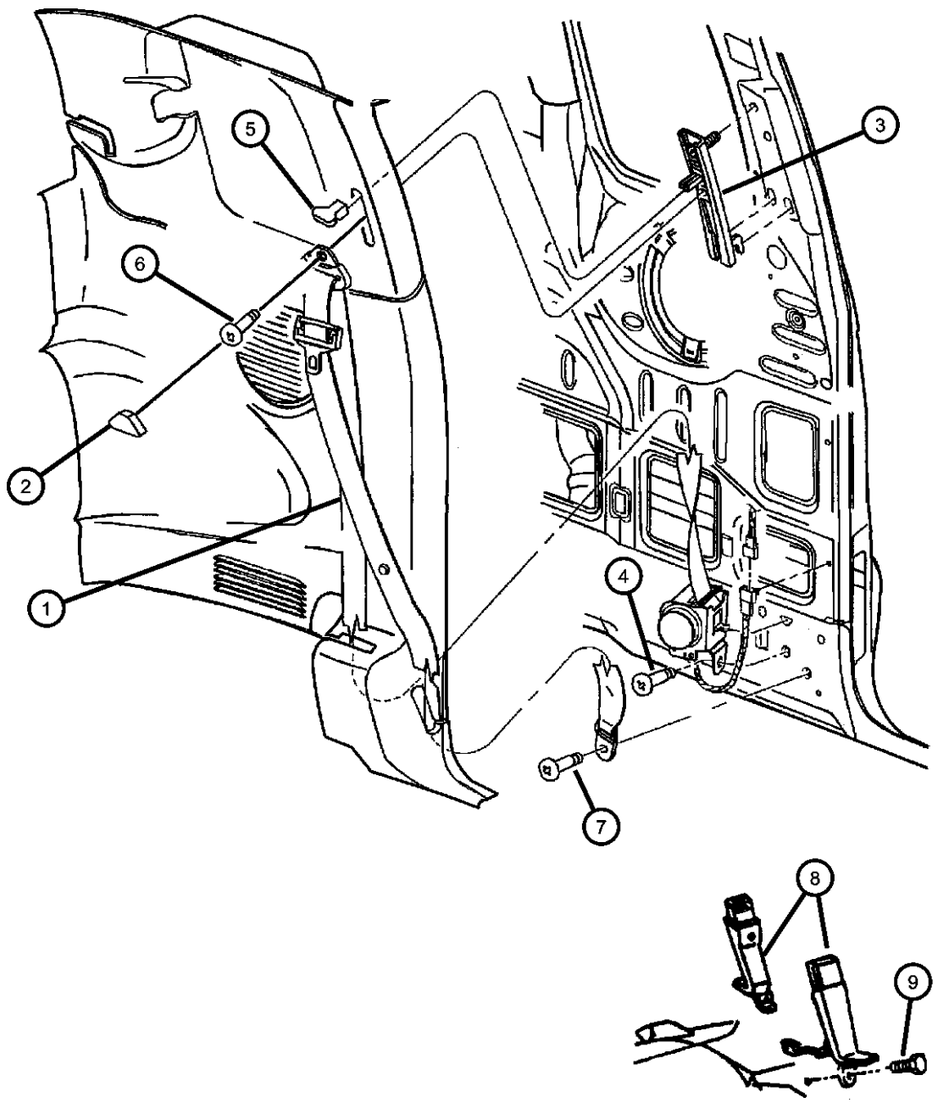

ITEM	PART NUMBER	QTY	LINE	SERIES	BODY	ENGINE	TRANS	TRIM	DESCRIPTION
		1			61			*G1	[L5], Bench Seat, Includes Center Assembly, Left
9									BOLT, Seat Belt Anchor
	04746341	2			31			*K5	
		2			31			*P9	
		1			61			*G1	
		1			61			*P9	
		1			61			*K5	
		1			61			*A2	
-10	05018505AA	1							EXTENDER, Seat Belt

DAKOTA (AN)

SERIES	LINE	BODY	ENGINE	TRANSMISSION
L = Dakota (All)	1 = Dakota 2WD	61 = Regular Cab (112 WB)	EPE = 2.5L 4 Cylinder	DGK = 4 Speed Automatic 42RE
	5 = Dakota 4WD	31 = Club Cab (131 WB)	EHC = 3.9L 6 Cylinder	DGT = 4 Speed Automatic 46RE
		84 = Quad Cab (131 WB)	EML = 5.0L 8 Cylinder	DDC = 5 Speed HD Manual
			EVA = 4.7L Magnum V8	DDK = 5 Speed HD Manual
			EP0 = All 2.5L	DG4 = Multispeed Automatic 45RFE
			EH0 = All 3.9L	DG0 = All Automatic Transmissions
			EM0 = All 5.9L	DBB = All Manual Transmissions
			EV0 = All 4.7L	

Belts, Front Seat, 4 Door
Figure IAN-715

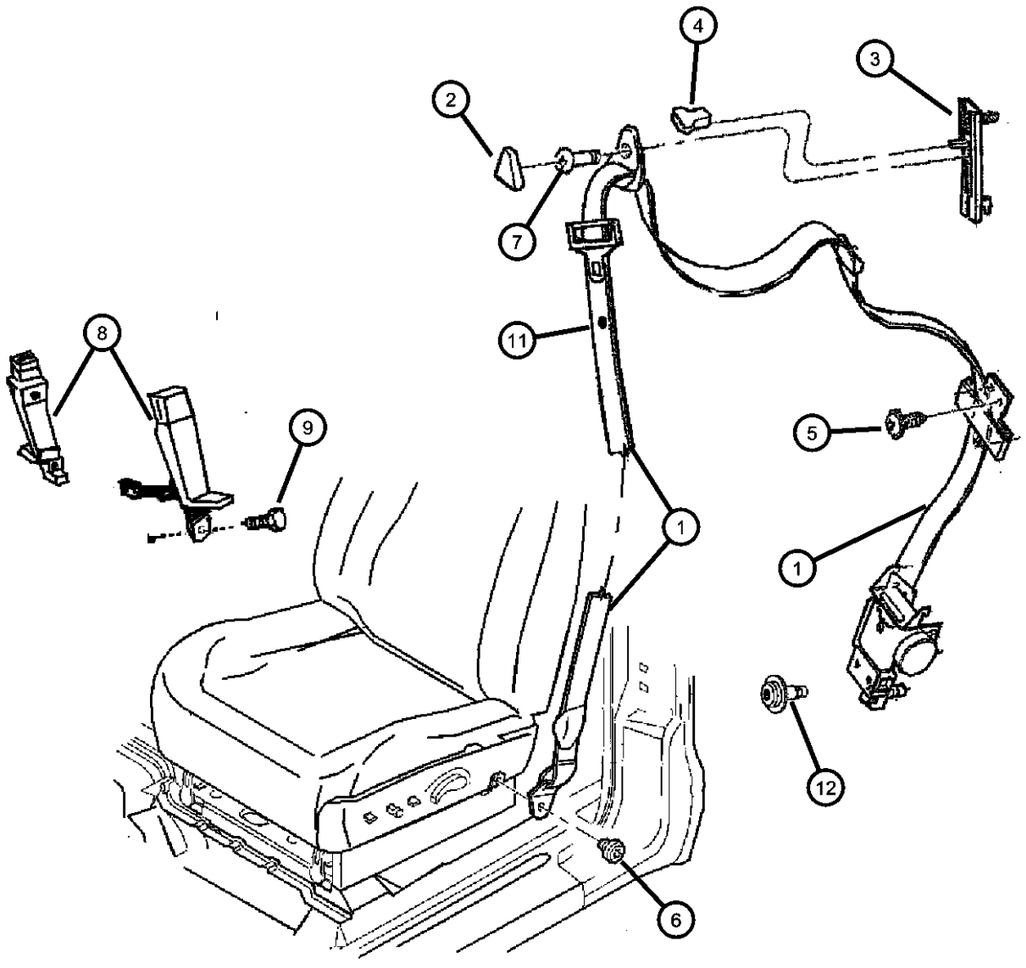

ITEM	PART NUMBER	QTY	LINE	SERIES	BODY	ENGINE	TRANS	TRIM	DESCRIPTION
1									SEAT BELT, Front Outer
	5HM101L5AB	1			84			*O0	[L5], Right
	5HM10XDVAB	1			84			*O0	[DV], Right
	5HM111L5AB	1			84			*O0	[L5], Left
	5HM11XDVAB	1			84			*O0	[DV], Left
2	5GR26TL2AD	2			84			*O0	COVER, Adjustable Turning Loop
3	55361000AA	2							ADJUSTER, Seat Belt Turning Loop
4	55350849AA	2							KNOB, Seat Belt Adjuster
5	J4004642	4			84				SCREW, Round Head, .164-18x.560
6	06033439	2			84				BOLT, Hex Head, .37-24x.55
7	06505803AA	2							SCREW, Shoulder
8									SEAT BELT, Front Inner
	0QP481DVAB	1			84			*P9	[DV], Center Right
		1			84			*QL	[DV], Center Right
	0QP481L5AB	1			84			*P9	[L5], Center Right
	0QP491DVAA	1			84			*P9	[DV], Center Left
	0QP491L5AA	1			84			*P9	[L5], Center Left
	5GK301DVAC	2			84			*K5	[DV],Buckle for Drivers or Passengers Side
		2			84			*LJ	[DV],Buckle for Drivers or Passengers Side
		2			84			*P9	[DV],Buckle for Drivers or Passengers Side
		2			84			*QL	[DV],Buckle for Drivers or Passengers Side
	5GK301L5AC	2			84			*K5	[L5],Buckle for Drivers or Passengers Side
		2			84			*LJ	[L5],Buckle for Drivers or Passengers Side
		2			84			*P9	[L5],Buckle for Drivers or Passengers Side
9									BOLT, Seat Belt Anchor
	04746341	2			84			*K5	
		2			84			*LJ	
		1			84			*P9	
-10	05018505AA	1							EXTENDER, Seat Belt

DAKOTA (AN)

SERIES	LINE	BODY	ENGINE	TRANSMISSION
L = Dakota (All)	1 = Dakota 2WD	61 = Regular Cab (112 WB)	EPE = 2.5L 4 Cylinder	DGK = 4 Speed Automatic 42RE
	5 = Dakota 4WD	31 = Club Cab (131 WB)	EHC = 3.9L 6 Cylinder	DGT = 4 Speed Automatic 46RE
		84 = Quad Cab (131 WB)	EML = 5.0L 8 Cylinder	DDC = 5 Speed HD Manual
			EVA = 4.7L Magnum V8	DDK = 5 Speed HD Manual
			EP0 = All 2.5L	DG4 = Multispeed Automatic 45RFE
			EH0 = All 3.9L	DG0 = All Automatic Transmissions
			EM0 = All 5.9L	DBB = All Manual Transmissions
			EV0 = All 4.7L	

Belts, Front Seat, 4 Door
Figure IAN-715

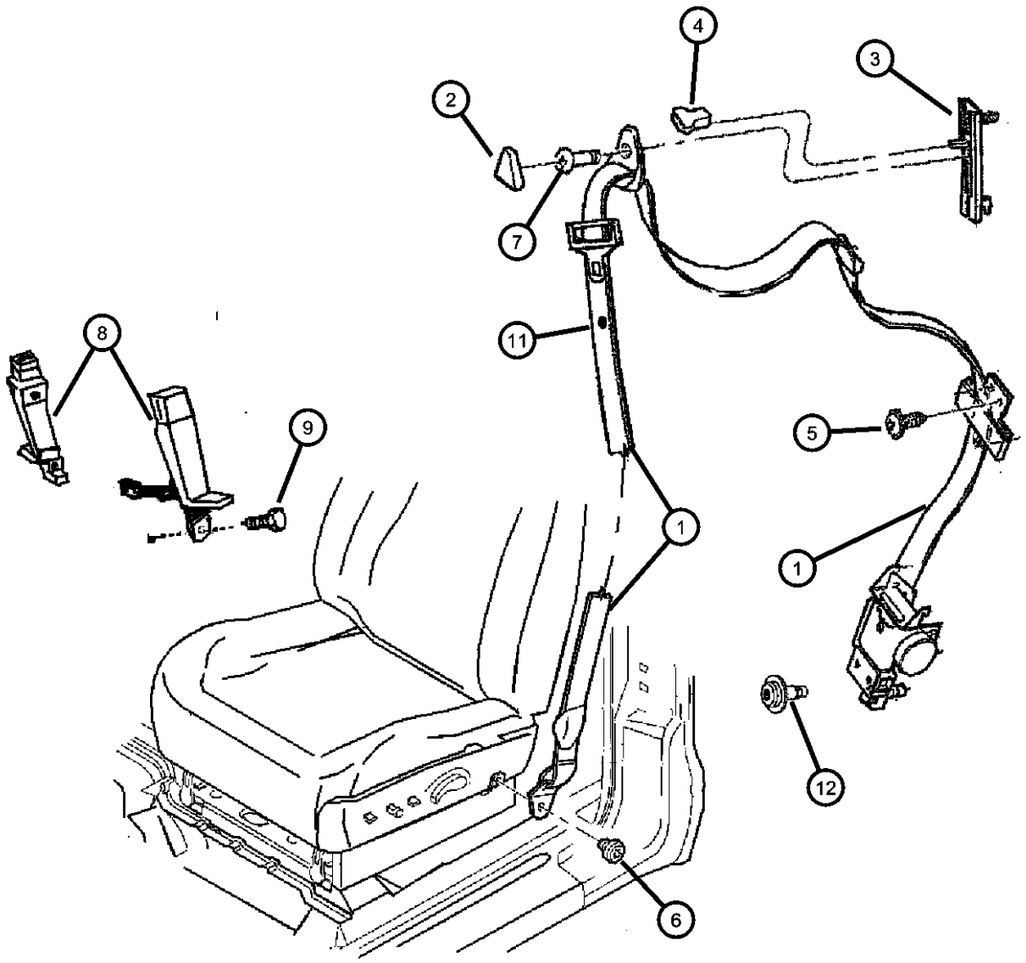

ITEM	PART NUMBER	QTY	LINE	SERIES	BODY	ENGINE	TRANS	TRIM	DESCRIPTION
11									BUTTON, BELT WEBBING
	05093280AA	1			84			*O0	[DV]
	05093282AA	1			84			*O0	[L5]
12	06035992AA	2			84				SCREW AND WASHER, Pan Head, .437-20x1.20

DAKOTA (AN)

SERIES	LINE	BODY	ENGINE	TRANSMISSION
L = Dakota (All)	1 = Dakota 2WD	61 = Regular Cab (112 WB)	EPE = 2.5L 4 Cylinder	DGK = 4 Speed Automatic 42RE
	5 = Dakota 4WD	31 = Club Cab (131 WB)	EHC = 3.9L 6 Cylinder	DGT = 4 Speed Automatic 46RE
		84 = Quad Cab (131 WB)	EML = 5.0L 8 Cylinder	DDC = 5 Speed HD Manual
			EVA = 4.7L Magnum V8	DDK = 5 Speed HD Manual
			EP0 = All 2.5L	DG4 = Multispeed Automatic 45RFE
			EH0 = All 3.9L	DG0 = All Automatic Transmissions
			EM0 = All 5.9L	DBB = All Manual Transmissions
			EV0 = All 4.7L	

Belts, Rear Seat and Tethers
Figure IAN-720

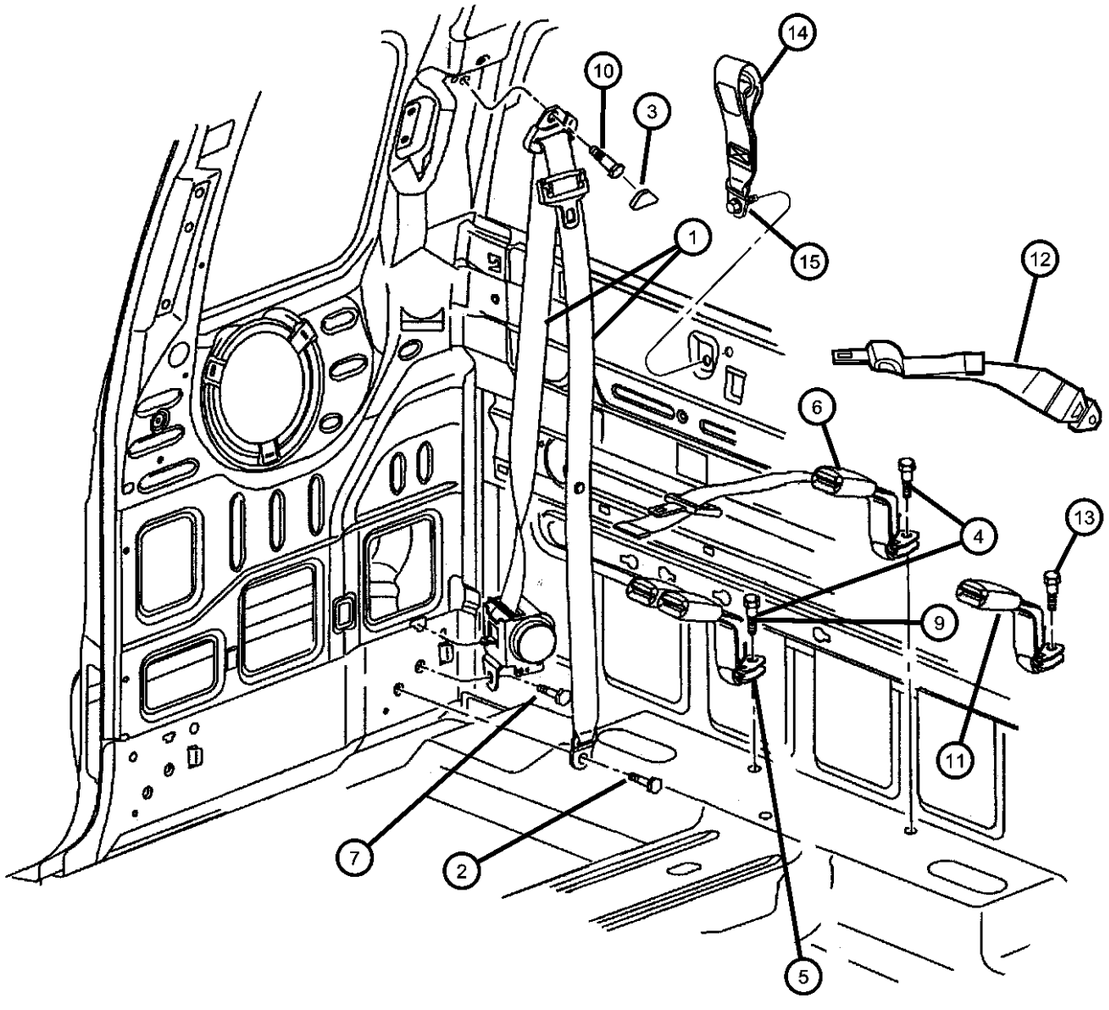

ITEM	PART NUMBER	QTY	LINE	SERIES	BODY	ENGINE	TRANS	TRIM	DESCRIPTION
1									SEAT BELT, Rear
	5GD021L5AD	2			31, 84			*O0	[L5]
	5GD02XD-VAD	2			31, 84			*O0	[DV]
2	06036109AA	2			31, 84				SCREW, Pan Head
3									COVER, Adjustable Turning Loop
	5GR26TL2AD	2			84			*O0	
		2			31			*O0	
4	06504847AA	1			31			*O0	SCREW, Also Included in Seat Belt
5									SEAT BELT, Rear Inner
	5DW281DVAB	1			31			*O0	[DV]
	5DW281L5AB	1			31			*O0	[L5]
	5GK641DVAC	1			84			*O0	[DV]
	5GK641L5AC	1			84			*O0	[L5]
6									SEAT BELT, Rear Inner
	5DW291DVAB	1			31			*O0	[DV]
	5DW291L5AB	1			31			*O0	[L5]
7	06036108AA	2			31, 61				SCREW, Pan Head
-8	05018505AA	1							EXTENDER, Seat Belt
9									BOLT, Seat Belt
	06506527AA	1			84			*O0	
		1			84			*QL	
10									BOLT
	06036348AA	2			31				
		2			84				
11									SEAT BELT, Rear Inner, Buckle to Seat, Inboard, Left
	5GU991DVAC	1			84			*LJ	[DV]
		1			84			*K5	[DV]
		1			84			*P9	[DV]
	5GU991L5AC	1			84			*LJ	[L5]
		1			84			*K5	[L5]
		1			84			*P9	[L5]
	5GU991DVAD	1			84			*QL	[DV]

DAKOTA (AN)

SERIES	LINE	BODY	ENGINE	TRANSMISSION
L = Dakota (All)	1 = Dakota 2WD 5 = Dakota 4WD	61 = Regular Cab (112 WB) 31 = Club Cab (131 WB) 84 = Quad Cab (131 WB)	EPE = 2.5L 4 Cylinder EHC = 3.9L 6 Cylinder EML = 5.0L 8 Cylinder EVA = 4.7L Magnum V8 EP0 = All 2.5L EH0 = All 3.9L EM0 = All 5.9L EV0 = All 4.7L	DGK = 4 Speed Automatic 42RE DGT = 4 Speed Automatic 46RE DDC = 5 Speed HD Manual DDK = 5 Speed HD Manual DG4 = Multispeed Automatic 45RFE DG0 = All Automatic Transmissions DBB = All Manual Transmissions

Belts, Rear Seat and Tethers
Figure IAN-720

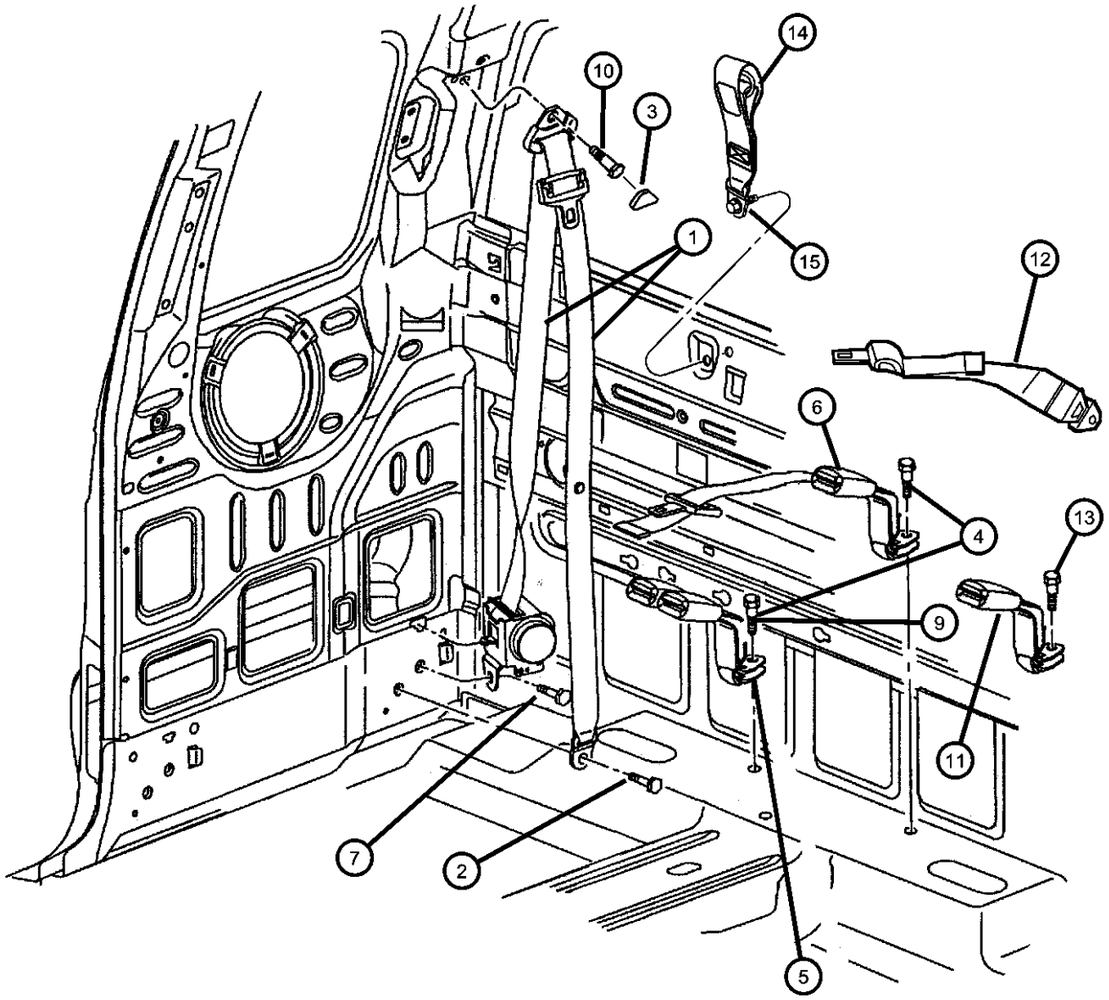

ITEM	PART NUMBER	QTY	LINE	SERIES	BODY	ENGINE	TRANS	TRIM	DESCRIPTION
	5GU991L5AD	1			84			*QL	[L5]
12									SEAT BELT, Rear Inner, Inboard Web Adjuster, Left
	5GK631DVAA	1			84			*LJ	[DV]
		1			84			*K5	[DV]
		1			84			*P9	[DV]
		1			84			*QL	[DV]
	5GK631L5AA	1			84			*LJ	[L5]
		1			84			*K5	[L5]
		1			84			*P9	[L5]
		1			84			*QL	[L5]
13									SCREW
	06036142AA	1			84			*K5	
		1			84			*P9	
		1			84			*LJ	
		1			84			*QL	
14									ANCHOR PACKAGE, Child Seat Tether
	05016572AD	1			31				
	05016573AD	1			84				
	05017683AD	1			61				
15									SCREW AND WASHER, Hex Head, M8x1.25x30
	06506961AA	2			61				
		3			31				
		1			84				

DAKOTA (AN)

SERIES	LINE	BODY	ENGINE	TRANSMISSION
L = Dakota (All)	1 = Dakota 2WD	61 = Regular Cab (112 WB)	EPE = 2.5L 4 Cylinder	DGK = 4 Speed Automatic 42RE
	5 = Dakota 4WD	31 = Club Cab (131 WB)	EHC = 3.9L 6 Cylinder	DGT = 4 Speed Automatic 46RE
		84 = Quad Cab (131 WB)	EML = 5.0L 8 Cylinder	DDC = 5 Speed HD Manual
			EVA = 4.7L Magnum V8	DDK = 5 Speed HD Manual
			EP0 = All 2.5L	DG4 = Multispeed Automatic 45RFE
			EH0 = All 3.9L	DG0 = All Automatic Transmissions
			EM0 = All 5.9L	DBB = All Manual Transmissions
			EV0 = All 4.7L	

Adjuster And Attaching Parts
Figure IAN-810

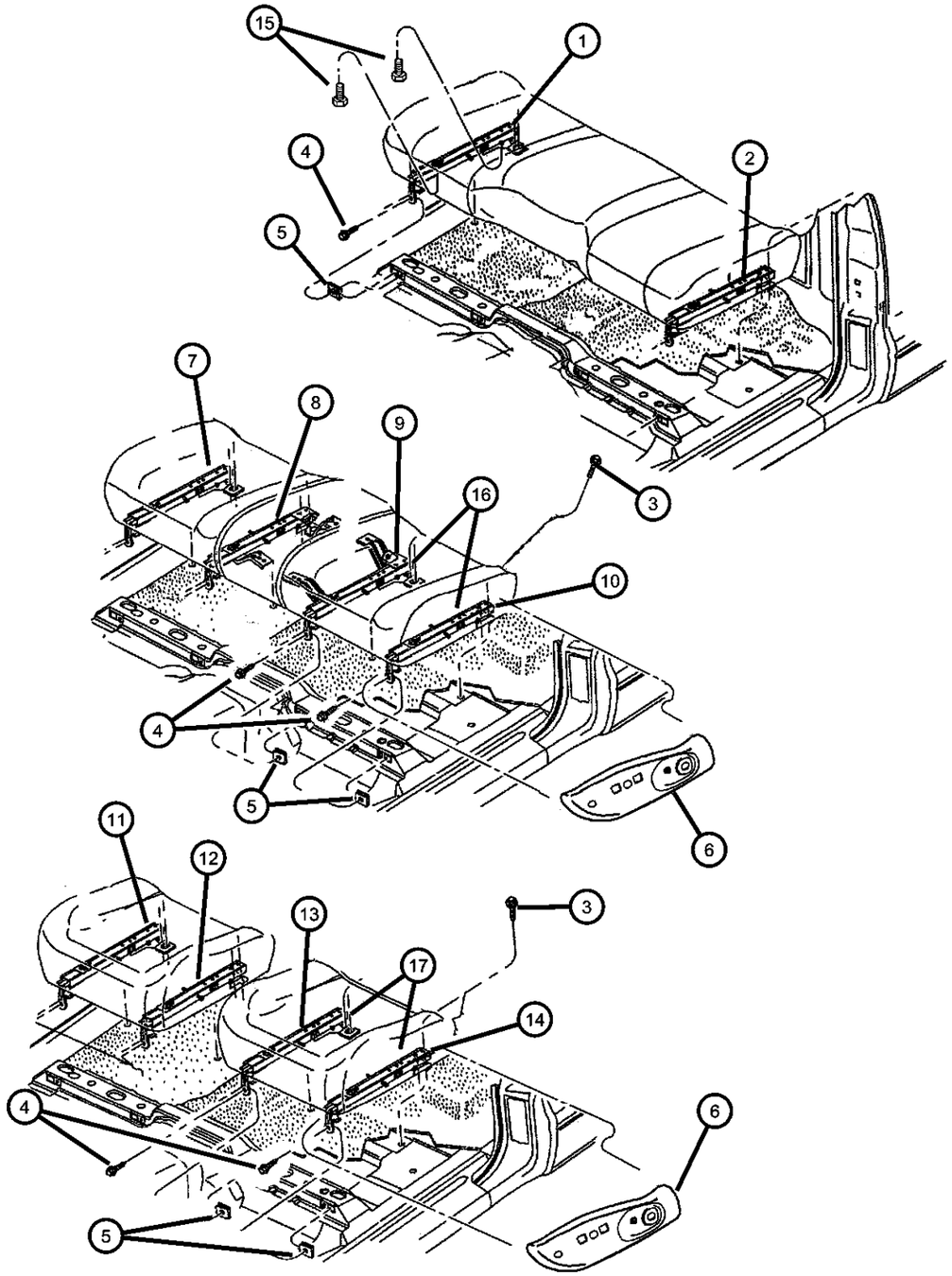

ITEM	PART NUMBER	QTY	LINE	SERIES	BODY	ENGINE	TRANS	TRIM	DESCRIPTION
1									ADJUSTER, Manual Seat
	05016624AA	1			61			*G1	Passenger, Outboard
		1			61			*A2	Passenger, Outboard
2									ADJUSTER, Manual Seat
	05016625AA	1			61			*G1	Driver, Outboard
		1			61			*A2	Driver, Outboard
3	06507241AA	4							SCREW AND WASHER, Hex Head
4	06500664	4							SCREW AND WASHER, Hex Head, M8x1.25x35
5	06101283	4							U-NUT, M8x1.25, M8x1.25
6									SHIELD, Seat Cushion, Power Seat
	0RN901DVAA	1			31			*K5	[DV], Left
		1			31			*P9	[DV], Left
	0RN901L5AA	1			31			*K5	[L5], Left
		1			31			*P9	[L5], Left
	0TF851DVAA	1			84			*K5	[DV], Left
		1			84			*LJ	[DV], Left
		1			84			*QL	[DV], Left
	0TF851L5AA	1			84			*K5	[L5], Left
		1			84			*LJ	[L5], Left
		1			84			*QL	[L5], Left
7									ADJUSTER, Manual Seat, 40/20/40 Seat
	05016598AA	1			84			*P9	Passenger Outboard
		1			84			*QL	Passenger Outboard
	05016624AA	1			61			*P9	Passenger Outboard
	05016626AA	1			31			*P9	Passenger Outboard
8									ADJUSTER, Manual Seat, 40/20/40 Seat
	05012486AA	1			61			*P9	Passenger Inboard
	05012494AA	1			31			*P9	Passenger Inboard
	05015631AA	1			84			*P9	Passenger Inboard
	05016601AA	1			84			*QL	Passenger Inboard
9									ADJUSTER, Manual Seat, 40/20/40 Seat

DAKOTA (AN)

SERIES	LINE	BODY	ENGINE	TRANSMISSION
L = Dakota (All)	1 = Dakota 2WD	61 = Regular Cab (112 WB)	EPE = 2.5L 4 Cylinder	DGK = 4 Speed Automatic 42RE
	5 = Dakota 4WD	31 = Club Cab (131 WB)	EHC = 3.9L 6 Cylinder	DGT = 4 Speed Automatic 46RE
		84 = Quad Cab (131 WB)	EML = 5.0L 8 Cylinder	DDC = 5 Speed HD Manual
			EVA = 4.7L Magnum V8	DDK = 5 Speed HD Manual
			EP0 = All 2.5L	DG4 = Multispeed Automatic 45RFE
			EH0 = All 3.9L	DG0 = All Automatic Transmissions
			EM0 = All 5.9L	DBB = All Manual Transmissions
			EV0 = All 4.7L	

Adjuster And Attaching Parts
Figure IAN-810

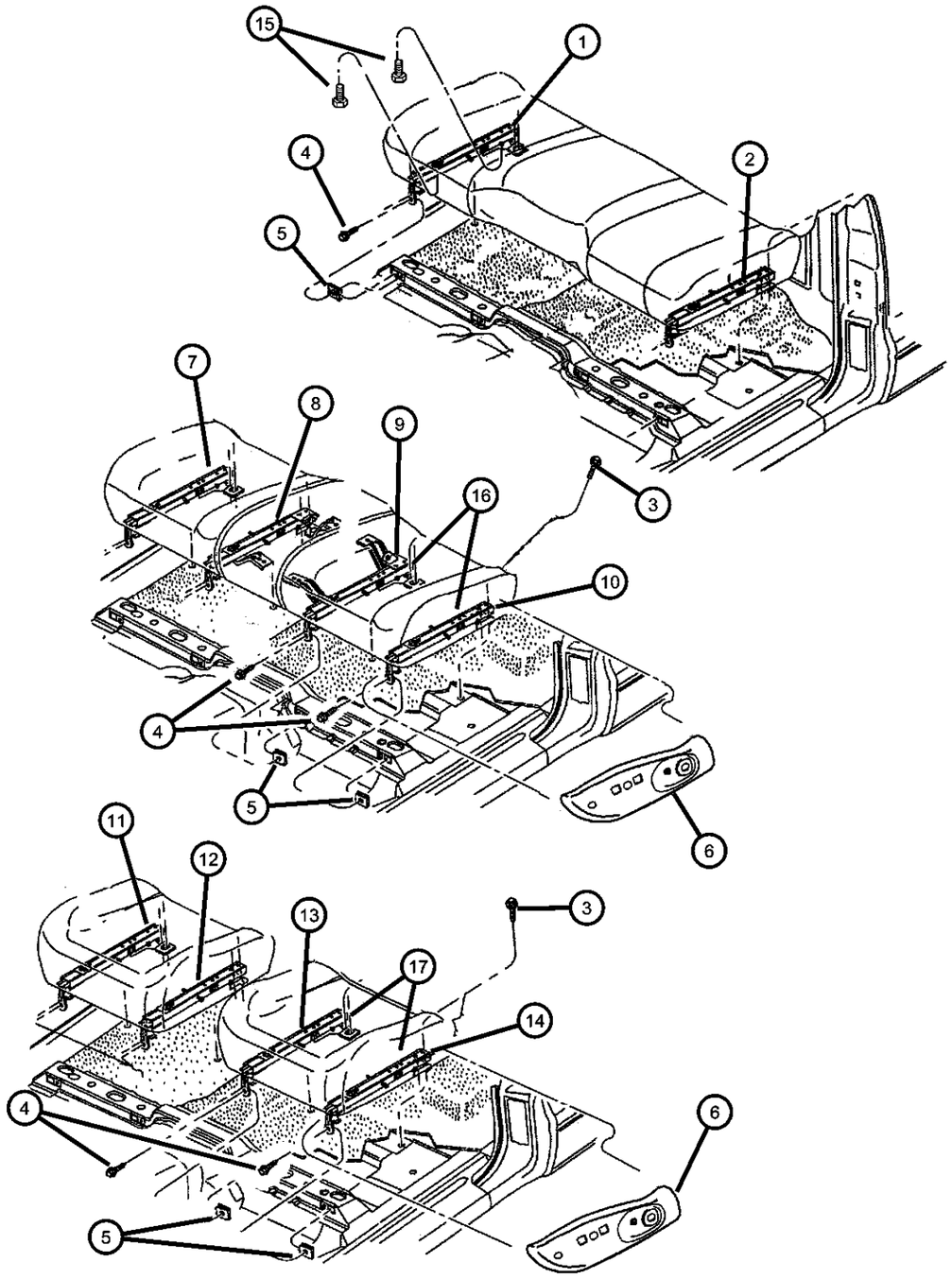

ITEM	PART NUMBER	QTY	LINE	SERIES	BODY	ENGINE	TRANS	TRIM	DESCRIPTION
	05012485AA	1			61			*P9	Driver, Inboard
	05012493AA	1			31			*P9	Driver, Inboard
	05015630AA	1			84			*P9	Driver, Inboard
10									ADJUSTER, Manual Seat, 40/20/40 Seat
	05016599AA	1			84			*P9	Driver, Outboard
	05016625AA	1			61			*P9	Driver, Outboard
	05016627AA	1			31			*P9	Driver, Outboard
11									ADJUSTER, Manual Seat, Bucket Seats
	05016598AA	1			84			*K5	Passenger Outboard
		1			84			*LJ	Passenger Outboard
	05016624AA	1			61			*K5	Passenger Outboard
	05016626AA	1			31			*K5	With Easy Entry, Passenger Outboard
12									ADJUSTER, Manual Seat, Bucket Seats
	05016599AA	1			84			*LJ	Passenger Inboard
		1			84			*K5	Passenger Inboard
	05016619AA	1			31			*K5	Passenger Inboard
	05016623AA	1			61			*K5	Passenger Inboard
13									ADJUSTER, Manual Seat, Bucket Seats
	05016598AA	1			84			*K5	Driver, Inboard
	05016618AA	1			31			*K5	Driver, Inboard
	05016622AA	1			61			*K5	Driver, Inboard
14									ADJUSTER, Manual Seat, Bucket Seats
	05016599AA	1			84			*K5	Driver, Outboard
	05016625AA	1			61			*G1	Driver, Outboard
	05016627AA	1			31			*K5	Driver, Outboard
15									BOLT, M8x1.25x25
	04883540AA	10			31			*K5	Power Seat
		1			61			*G1	
		8			61			*K5	Manual Seat

DAKOTA (AN)

SERIES	LINE	BODY	ENGINE	TRANSMISSION
L = Dakota (All)	1 = Dakota 2WD	61 = Regular Cab (112 WB)	EPE = 2.5L 4 Cylinder	DGK = 4 Speed Automatic 42RE
	5 = Dakota 4WD	31 = Club Cab (131 WB)	EHC = 3.9L 6 Cylinder	DGT = 4 Speed Automatic 46RE
		84 = Quad Cab (131 WB)	EML = 5.0L 8 Cylinder	DDC = 5 Speed HD Manual
			EVA = 4.7L Magnum V8	DDK = 5 Speed HD Manual
			EP0 = All 2.5L	DG4 = Multispeed Automatic 45RFE
			EH0 = All 3.9L	DG0 = All Automatic Transmissions
			EM0 = All 5.9L	DBB = All Manual Transmissions
			EV0 = All 4.7L	

Adjuster And Attaching Parts
Figure IAN-810

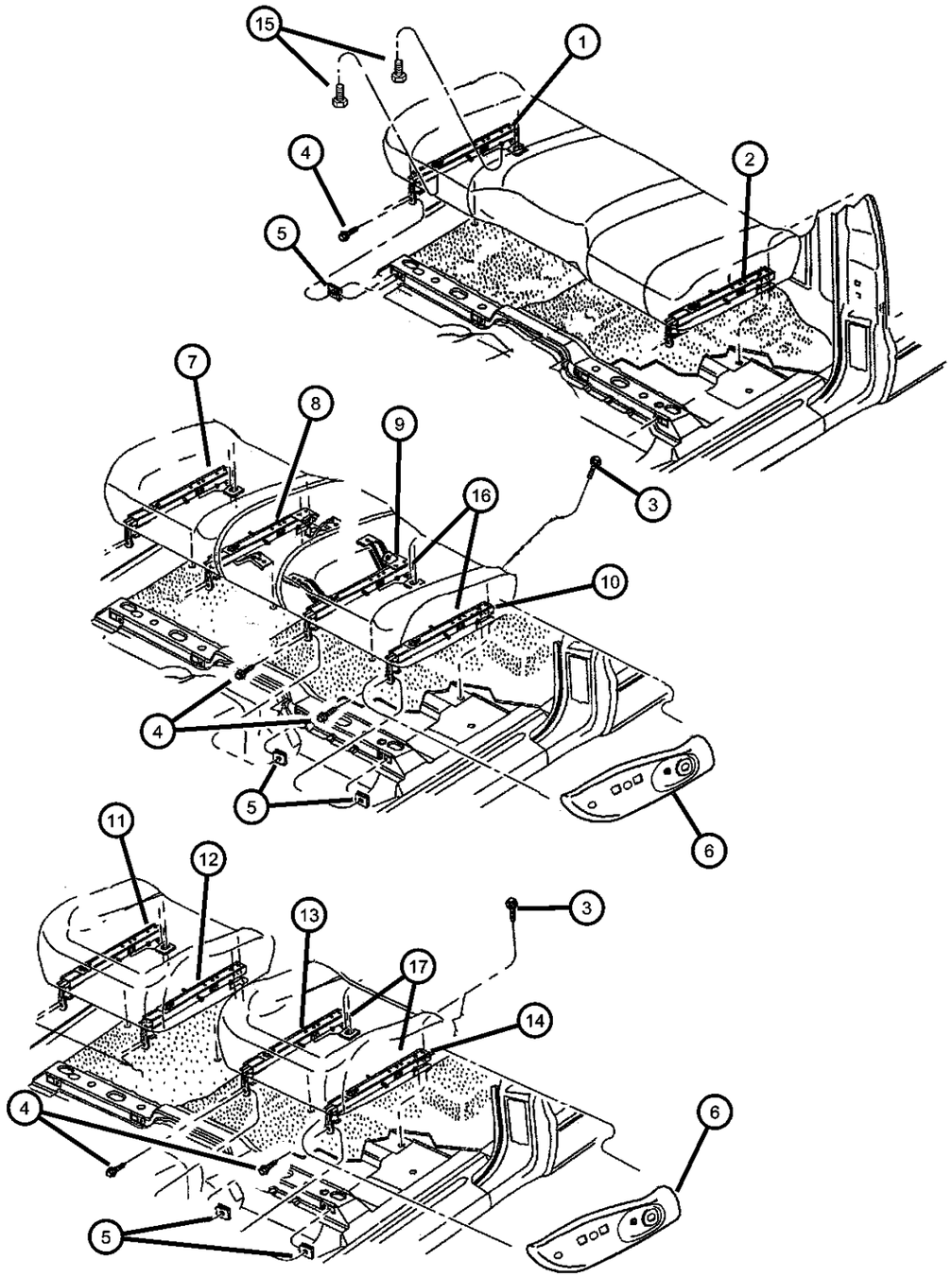

ITEM	PART NUMBER	QTY	LINE	SERIES	BODY	ENGINE	TRANS	TRIM	DESCRIPTION
		8			84			*K5	Manual Seat
		10			84			*K5	Power Seat
		10			84			*LJ	
		1			61			*A2	
		8			31			*K5	Manual Seat
		12			84			*QL	
16									ADJUSTER, Power Seat, 40/20/40 Seat
	05017735AA	1			31			*P9	
	05017807AA	1			84			*P9	
		1			84			*QL	
17									ADJUSTER, Power Seat, Bucket Seats
	05017737AA	1			31			*K5	Driver
	05017808AA	1			84			*K5	Driver
		1			84			*LJ	Driver

DAKOTA (AN)

SERIES	LINE	BODY	ENGINE	TRANSMISSION
L = Dakota (All)	1 = Dakota 2WD	61 = Regular Cab (112 WB)	EPE = 2.5L 4 Cylinder	DGK = 4 Speed Automatic 42RE
	5 = Dakota 4WD	31 = Club Cab (131 WB)	EHC = 3.9L 6 Cylinder	DGT = 4 Speed Automatic 46RE
		84 = Quad Cab (131 WB)	EML = 5.0L 8 Cylinder	DDC = 5 Speed HD Manual
			EVA = 4.7L Magnum V8	DDK = 5 Speed HD Manual
			EP0 = All 2.5L	DG4 = Multispeed Automatic 45RFE
			EH0 = All 3.9L	DG0 = All Automatic Transmissions
			EM0 = All 5.9L	DBB = All Manual Transmissions
			EV0 = All 4.7L	

Handles, Lock Bar And Attaching Parts
Figure IAN-820

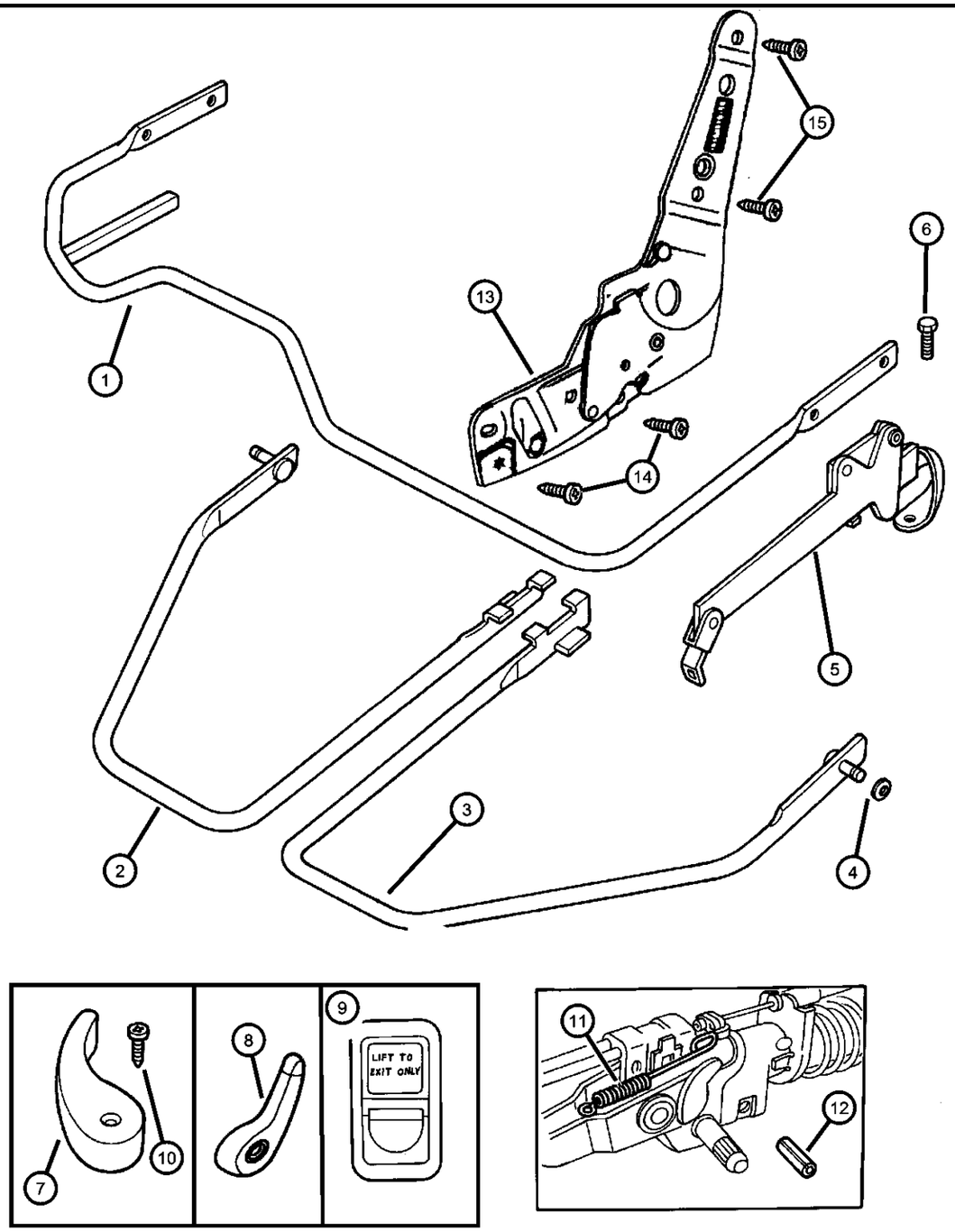

ITEM	PART NUMBER	QTY	LINE	SERIES	BODY	ENGINE	TRANS	TRIM	DESCRIPTION
Recliner for Split Bench and Bucket seats are serviced in seat cushions..									
1									HANDLE, Seat Release, Towel Bar
	04883485AA	1			61			*A2	
		1			61			*G1	
2									HANDLE, Seat Release, Towel Bar, Passenger
	04883486AA	1			31			*K5	
		1			61			*K5	
		1			84			*K5	
		1			84			*LJ	
		1			84			*P9	
		1			31			*P9	
		1			61			*P9	
		1			84			*QL	
3									HANDLE, Seat Release, Towel Bar, Driver
	04883487AA	1			61			*P9	
		1			31			*P9	
		1			84			*P9	
		1			84			*K5	
		1			31			*K5	
		1			61			*K5	
4									NUT, Push On, M6
	04883539AA	1			61			*G1	
		1			61			*P9	
		1			31			*P9	
		1			61			*K5	
		1			31			*K5	
		1			84			*K5	
		1			84			*P9	
		1			84			*LJ	
		1			61			*A2	
		2			84			*QL	
5									LOCK BAR, Seat Belt

DAKOTA (AN)

SERIES	LINE	BODY	ENGINE	TRANSMISSION
L = Dakota (All)	1 = Dakota 2WD	61 = Regular Cab (112 WB)	EPE = 2.5L 4 Cylinder	DGK = 4 Speed Automatic 42RE
	5 = Dakota 4WD	31 = Club Cab (131 WB)	EHC = 3.9L 6 Cylinder	DGT = 4 Speed Automatic 46RE
		84 = Quad Cab (131 WB)	EML = 5.0L 8 Cylinder	DDC = 5 Speed HD Manual
			EVA = 4.7L Magnum V8	DDK = 5 Speed HD Manual
			EP0 = All 2.5L	DG4 = Multispeed Automatic 45RFE
			EH0 = All 3.9L	DG0 = All Automatic Transmissions
			EM0 = All 5.9L	DBB = All Manual Transmissions
			EV0 = All 4.7L	

Handles, Lock Bar And Attaching Parts
Figure IAN-820

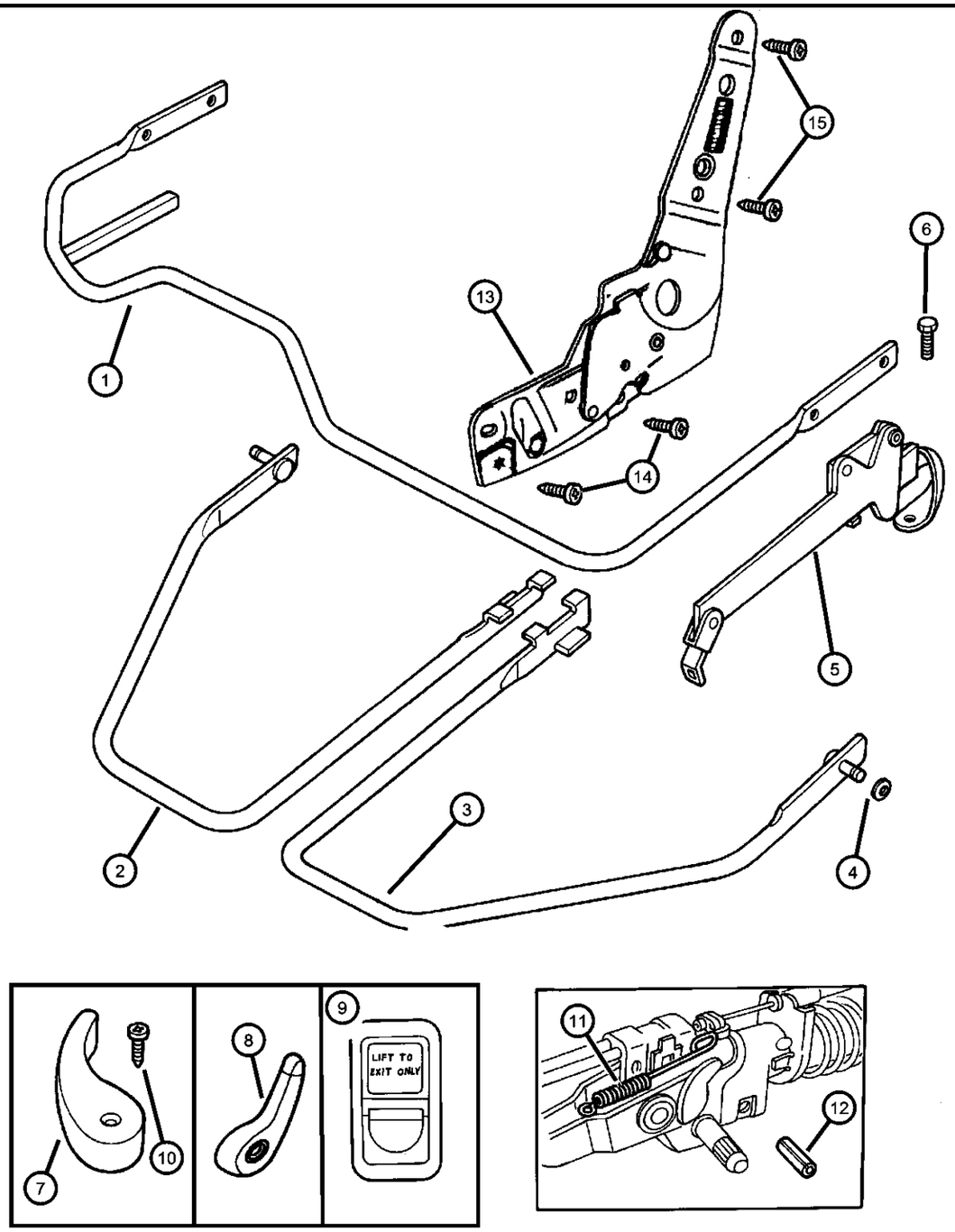

ITEM	PART NUMBER	QTY	LINE	SERIES	BODY	ENGINE	TRANS	TRIM	DESCRIPTION
	04883492AA	1			61			*A2	Right
		1			61			*G1	Right
	04883493AA	1			61			*G1	Left
		1			61			*A2	Left
6									BOLT, Seat Belt Anchor
	04746341	1			61			*G1	
		1			61			*P9	
		1			31			*P9	
		1			61			*K5	
		1			31			*K5	
		1			84			*P9	
		1			84			*K5	
		1			84			*LJ	
		1			61			*A2	
		4			84			*QL	
7									HANDLE, Seat Recliner
	05012304AA	1			31			*K5	Right
		1			61			*K5	Right
		1			84			*K5	Right
		1			84			*LJ	Right
		1			84			*P9	Right
		1			31			*P9	Right
		1			61			*P9	Right
		1			84			*QL	Right
	05012305AA	1			31			*P9	Left
		1			61			*P9	Left
		1			84			*P9	Left
		1			84			*LJ	Left
		1			84			*K5	Left
		1			31			*K5	Left
		1			61			*K5	Left
		1			84			*QL	Left

DAKOTA (AN)

SERIES	LINE	BODY	ENGINE	TRANSMISSION
L = Dakota (All)	1 = Dakota 2WD	61 = Regular Cab (112 WB)	EPE = 2.5L 4 Cylinder	DGK = 4 Speed Automatic 42RE
	5 = Dakota 4WD	31 = Club Cab (131 WB)	EHC = 3.9L 6 Cylinder	DGT = 4 Speed Automatic 46RE
		84 = Quad Cab (131 WB)	EML = 5.0L 8 Cylinder	DDC = 5 Speed HD Manual
			EVA = 4.7L Magnum V8	DDK = 5 Speed HD Manual
			EP0 = All 2.5L	DG4 = Multispeed Automatic 45RFE
			EH0 = All 3.9L	DG0 = All Automatic Transmissions
			EM0 = All 5.9L	DBB = All Manual Transmissions
			EV0 = All 4.7L	

Handles, Lock Bar And Attaching Parts
Figure IAN-820

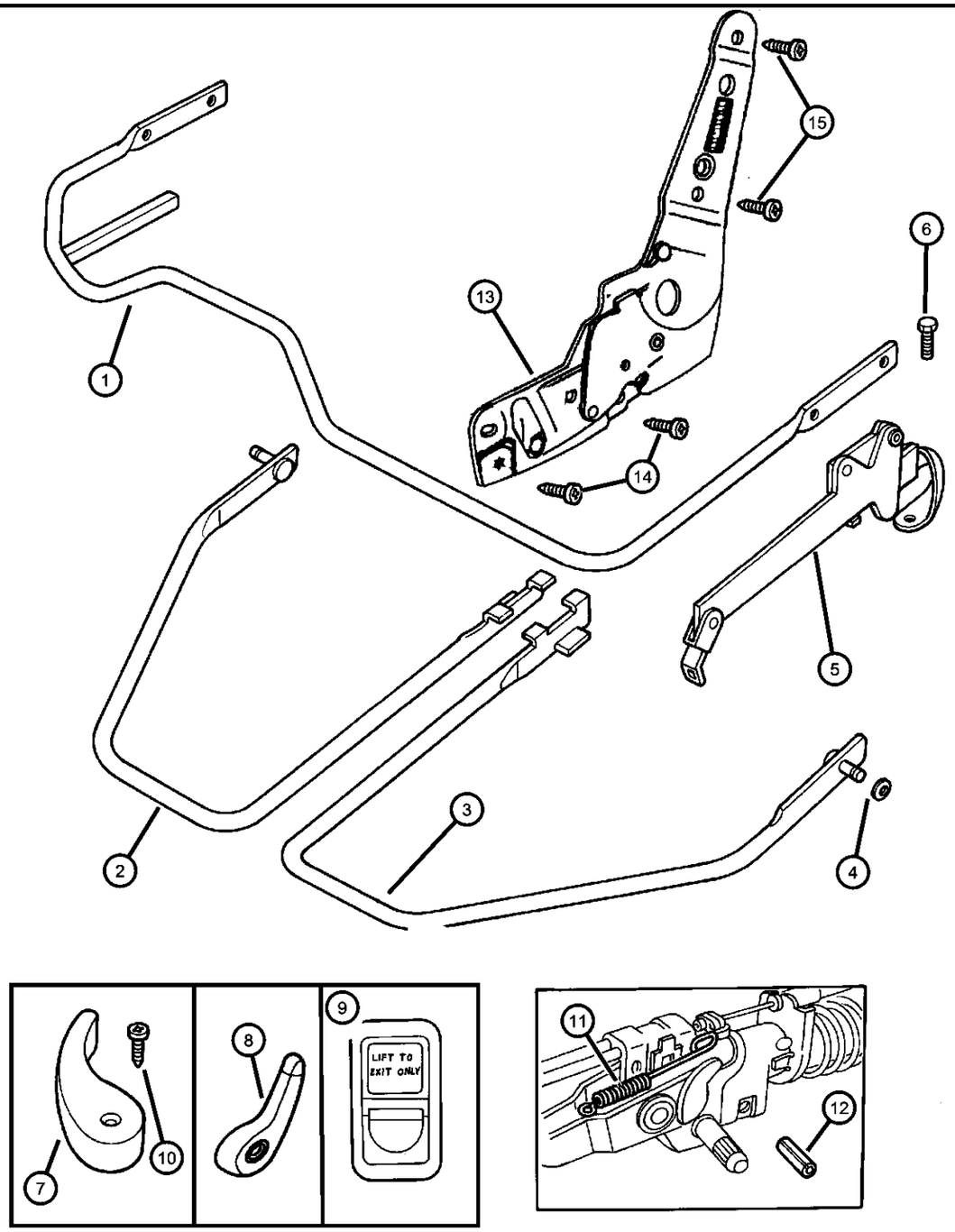

ITEM	PART NUMBER	QTY	LINE	SERIES	BODY	ENGINE	TRANS	TRIM	DESCRIPTION
8									HANDLE, Lumbar
	04797891	1			31			*K5	
		1			31			*P9	
		1			84			*P9	
		1			84			*LJ	
		1			84			*K5	
		1			84			*QL	
9									LEVER, Seat Latch Release
	04883571AA	2			31			*P9	
		2			31			*K5	
10									SCREW, Recliner Handle
	05011634AA	2			84			*K5	
		2			84			*LJ	
		1			61			*P9	
		1			31			*P9	
		1			84			*P9	
		2			84			*QL	
11									SPRING, Seat Latch Return
	04883532AA	1			31			*P9	
		1			31			*K5	
12									PIN, Roll
	04883677AA	1			31			*P9	
		4			61			*K5	
		1			84			*P9	
		1			84			*LJ	
		4			84			*K5	
		1			31			*K5	
		1			61			*P9	
		4			84			*QL	
13									LATCH, Seat, With Bench Seat
	04883794AA	1			61			*A2	Left
		1			61			*G1	Right

DAKOTA (AN)

SERIES	LINE	BODY	ENGINE	TRANSMISSION
L = Dakota (All)	1 = Dakota 2WD	61 = Regular Cab (112 WB)	EPE = 2.5L 4 Cylinder	DGK = 4 Speed Automatic 42RE
	5 = Dakota 4WD	31 = Club Cab (131 WB)	EHC = 3.9L 6 Cylinder	DGT = 4 Speed Automatic 46RE
		84 = Quad Cab (131 WB)	EML = 5.0L 8 Cylinder	DDC = 5 Speed HD Manual
			EVA = 4.7L Magnum V8	DDK = 5 Speed HD Manual
			EP0 = All 2.5L	DG4 = Multispeed Automatic 45RFE
			EH0 = All 3.9L	DG0 = All Automatic Transmissions
			EM0 = All 5.9L	DBB = All Manual Transmissions
			EV0 = All 4.7L	

Handles, Lock Bar And Attaching Parts
Figure IAN-820

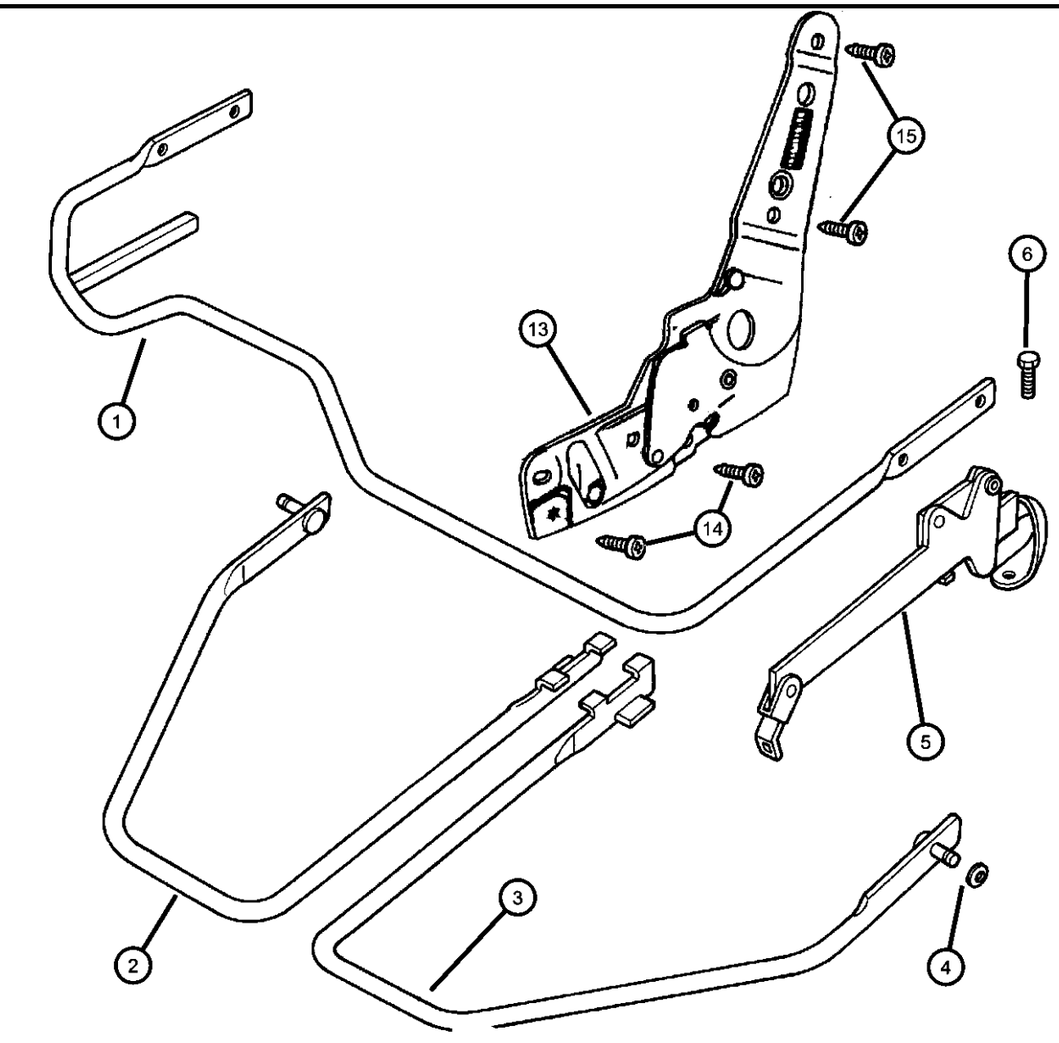

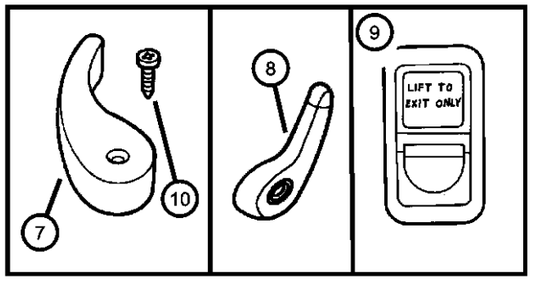

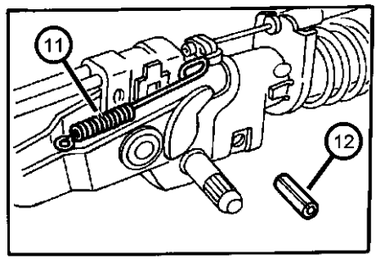

ITEM	PART NUMBER	QTY	LINE	SERIES	BODY	ENGINE	TRANS	TRIM	DESCRIPTION
	04883795AA	1			61			*G1	Left
		1			61			*A2	Right
14									BOLT, Hex Head, .312-18x.875
	04886377AA	1			61			*A2	
		1			61			*G1	
15									BOLT, Adjuster to Seat Frame
	04746334	1			61			*G1	
		4			61			*P9	
		4			31			*P9	
		4			84			*P9	
		1			61			*A2	
		4			84			*QL	

DAKOTA (AN)

SERIES	LINE	BODY	ENGINE	TRANSMISSION
L = Dakota (All)	1 = Dakota 2WD	61 = Regular Cab (112 WB)	EPE = 2.5L 4 Cylinder	DGK = 4 Speed Automatic 42RE
	5 = Dakota 4WD	31 = Club Cab (131 WB)	EHC = 3.9L 6 Cylinder	DGT = 4 Speed Automatic 46RE
		84 = Quad Cab (131 WB)	EML = 5.0L 8 Cylinder	DDC = 5 Speed HD Manual
			EVA = 4.7L Magnum V8	DDK = 5 Speed HD Manual
			EP0 = All 2.5L	DG4 = Multispeed Automatic 45RFE
			EH0 = All 3.9L	DG0 = All Automatic Transmissions
			EM0 = All 5.9L	DBB = All Manual Transmissions
			EV0 = All 4.7L	

AR = use ase required - = Non illustrrated part

Group - SAN

Body Sheet Metal Except Doors

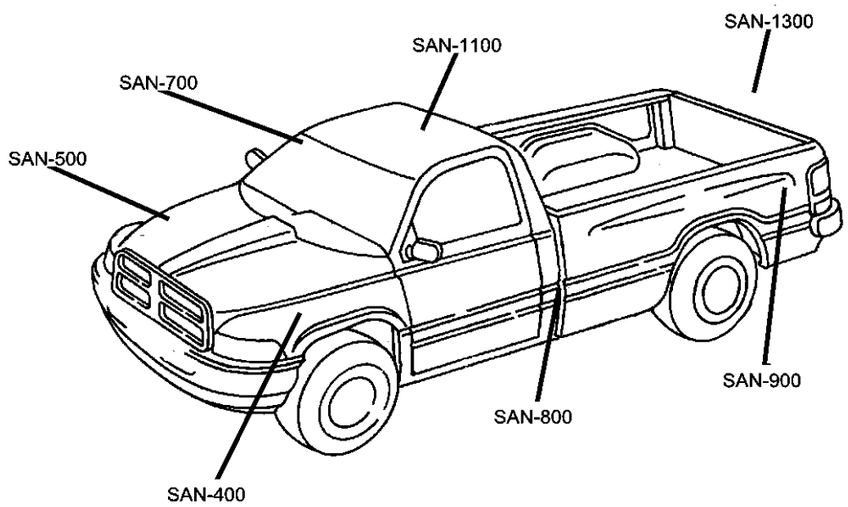

SAN-1100 Roof Panels 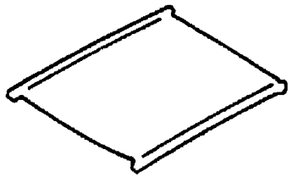	**SAN-1300** Tailgate 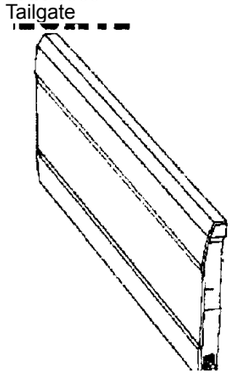	**SAN-1700** Tonneau Cover & Bed Liner 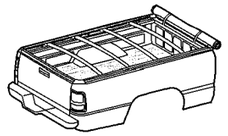	**SAN-200** Floor Pans 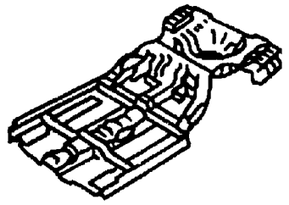
SAN-300 Plugs 	**SAN-400** Front Fenders 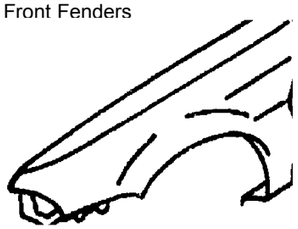	**SAN-500** Hood & Hood Release 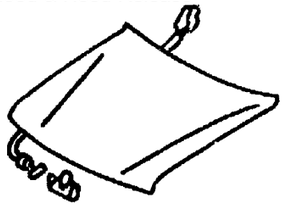	**SAN-600** Cowl and Dash Panel 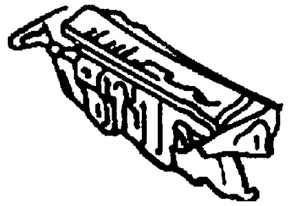
SAN-700 Glass and Rear View Mirror 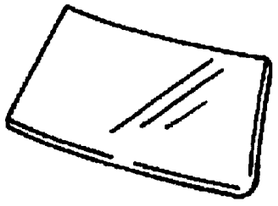	**SAN-800** Aperture Panel 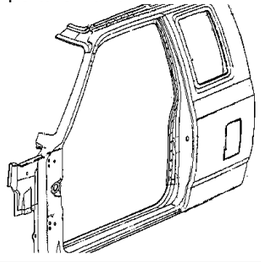	**SAN-900** Quarter Panel and Pillar 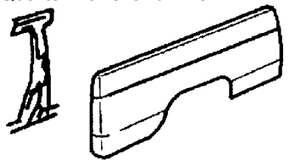	

Group - SAN Body Sheet Metal Except Doors

Illustration Title — Group-Fig. No.

Floor Pans
Floor Pan, Club Cab ..... Fig. SAN - 210
Floor Pan Standard Cab ..... Fig. SAN - 220
Floor Pan, 4 Door ..... Fig. SAN - 225
Floor Box And Panel ..... Fig. SAN - 230

Plugs
Plugs Floor Pan ..... Fig. SAN - 310
Plugs Miscellaneous ..... Fig. SAN - 320

Front Fenders
Fender Front ..... Fig. SAN - 410

Hood & Hood Release
Hood and Release ..... Fig. SAN - 510

Cowl and Dash Panel
Cowl Screen And Shield ..... Fig. SAN - 610

Glass and Rear View Mirror
Windshield And Mirror, Rear Window ..... Fig. SAN - 710

Aperture Panel
Aperture Panel Bodyside Standard Cab ..... Fig. SAN - 810
Aperture Panel Bodyside Club Cab ..... Fig. SAN - 820
Aperture Panel Bodyside, 4 Door ..... Fig. SAN - 830

Quarter Panel and Pillar
Sweptline Box, Panel Outer Box And Fuel Filler Door ..... Fig. SAN - 910

Roof Panels
Roof Panels ..... Fig. SAN - 1110

Tailgate
Tailgate ..... Fig. SAN - 1310

Tonneau Cover & Bed Liner
Tonneau Cover ..... Fig. SAN - 1710

Floor Pan, Club Cab
Figure SAN-210

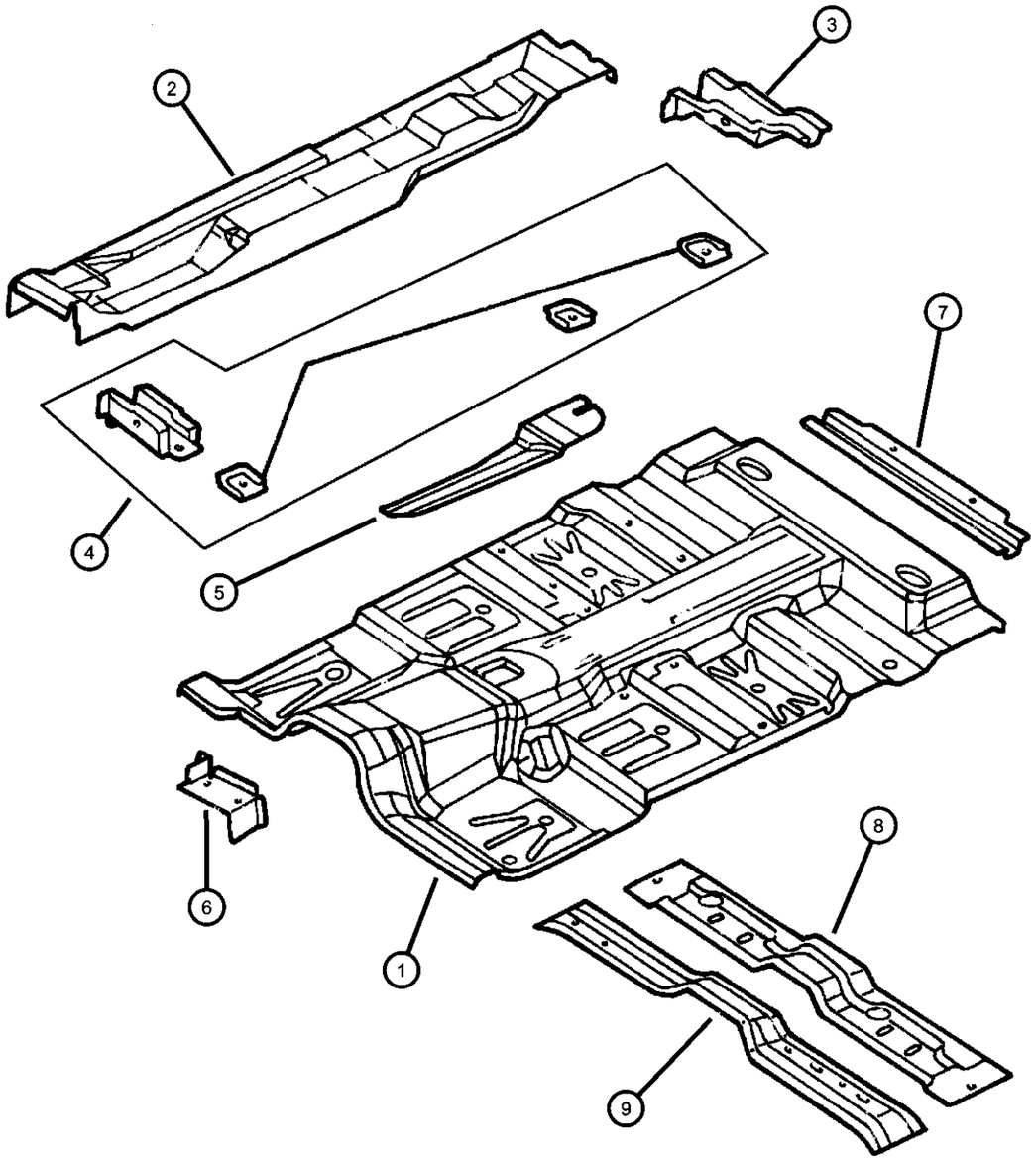

ITEM	PART NUMBER	QTY	LINE	SERIES	BODY	ENGINE	TRANS	TRIM	DESCRIPTION
1									PAN, Center Floor
	55257447AA	1			31				Automatic Transmission
	55257448AA	1			31				Manual Transmission
2									PAN, Floor
	55255556AG	1			31				Right
	55255557AG	1			31				Left
3									PANEL, Underbody Front
	55255742AB	1			31				Right
	55255743AB	1			31				Left
4									PANEL, Underbody Front
	55255740AE	1			31, 61				Right
	55255741AC	1			31, 61				Left
5	55257300AC	1							SHIELD, Heat
6	55256988AD	1			31, 61				BRACKET, Electronic Control Unit
7	55255878AC	1			31				CROSSMEMBER, Rear Floor, Seat Belt Attach
8	55255880AB	1			31, 61				CROSSMEMBER, Front Floor
9	55255702AC	1			31, 61				CROSSMEMBER, Front Floor

DAKOTA (AN)

SERIES	LINE	BODY	ENGINE	TRANSMISSION
L = Dakota (All)	1 = Dakota 2WD	61 = Regular Cab (112 WB)	EPE = 2.5L 4 Cylinder	DGK = 4 Speed Automatic 42RE
	5 = Dakota 4WD	31 = Club Cab (131 WB)	EHC = 3.9L 6 Cylinder	DGT = 4 Speed Automatic 46RE
		84 = Quad Cab (131 WB)	EML = 5.0L 8 Cylinder	DDC = 5 Speed HD Manual
			EVA = 4.7L Magnum V8	DDK = 5 Speed HD Manual
			EP0 = All 2.5L	DG4 = Multispeed Automatic 45RFE
			EH0 = All 3.9L	DG0 = All Automatic Transmissions
			EM0 = All 5.9L	DBB = All Manual Transmissions
			EV0 = All 4.7L	

Floor Pan Standard Cab
Figure SAN-220

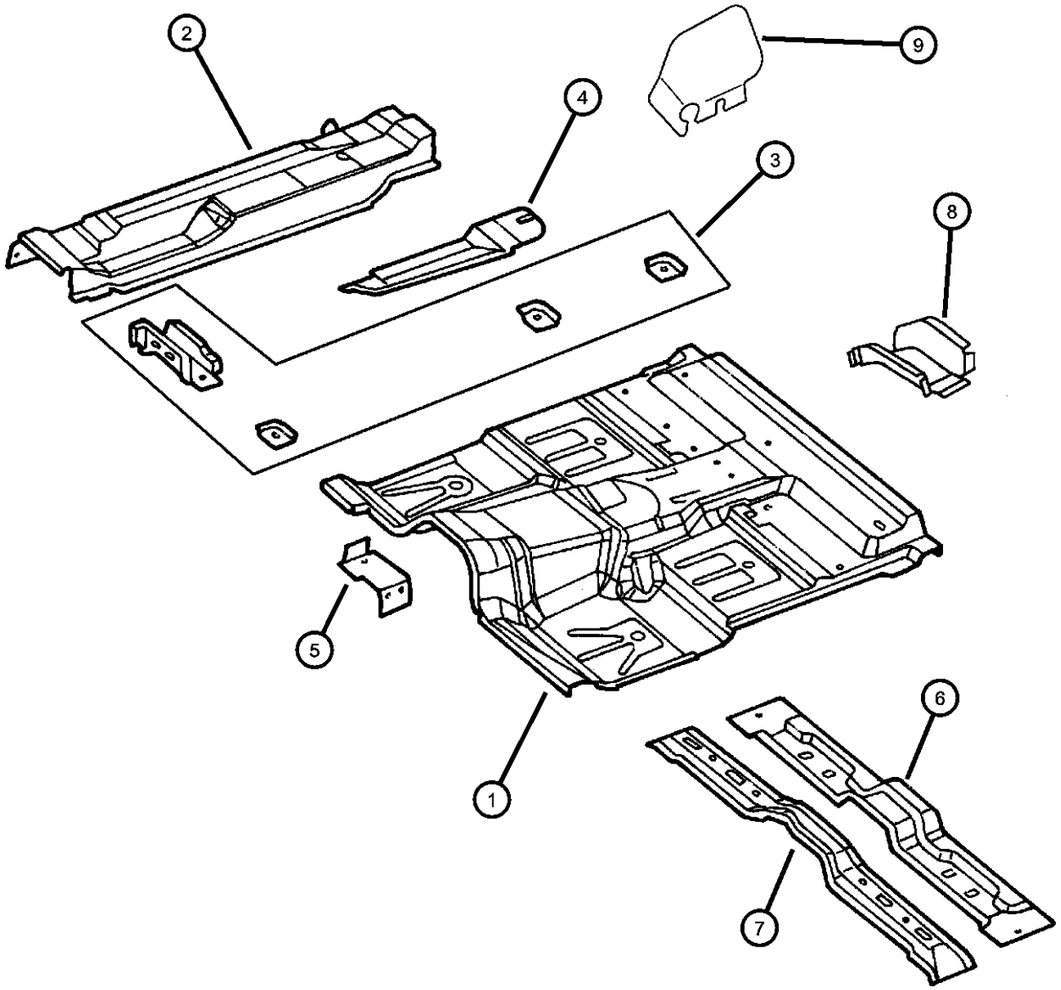

ITEM	PART NUMBER	QTY	LINE	SERIES	BODY	ENGINE	TRANS	TRIM	DESCRIPTION
1									PAN, Center Floor
	55257449AA	1			61				Automatic Transmission
	55257450AA	1			61				Manual Transmission
2									PAN, Floor
	55255554AD	1			61				Right
	55255555AD	1			61				Left
3									PANEL, Underbody Front
	55255740AE	1			31, 61				Right
	55255741AC	1			31, 61				Left
4	55257300AC	1							SHIELD, Heat
5	55256988AD	1			31, 61				BRACKET, Electronic Control Unit
6	55255880AB	1			31, 61				CROSSMEMBER, Front Floor
7	55255702AC	1			31, 61				CROSSMEMBER, Front Floor
8									PANEL, Underbody Front
	55255998AB	1			61				Right
	55255999AB	1			61				Left
9									BRACKET, Floor Pan Outer
	55256578	1			61				Right
	55256579	1			61				Left

DAKOTA (AN)

SERIES	LINE	BODY	ENGINE	TRANSMISSION
L = Dakota (All)	1 = Dakota 2WD	61 = Regular Cab (112 WB)	EPE = 2.5L 4 Cylinder	DGK = 4 Speed Automatic 42RE
	5 = Dakota 4WD	31 = Club Cab (131 WB)	EHC = 3.9L 6 Cylinder	DGT = 4 Speed Automatic 46RE
		84 = Quad Cab (131 WB)	EML = 5.0L 8 Cylinder	DDC = 5 Speed HD Manual
			EVA = 4.7L Magnum V8	DDK = 5 Speed HD Manual
			EP0 = All 2.5L	DG4 = Multispeed Automatic 45RFE
			EH0 = All 3.9L	DG0 = All Automatic Transmissions
			EM0 = All 5.9L	DBB = All Manual Transmissions
			EV0 = All 4.7L	

Floor Pan, 4 Door
Figure SAN-225

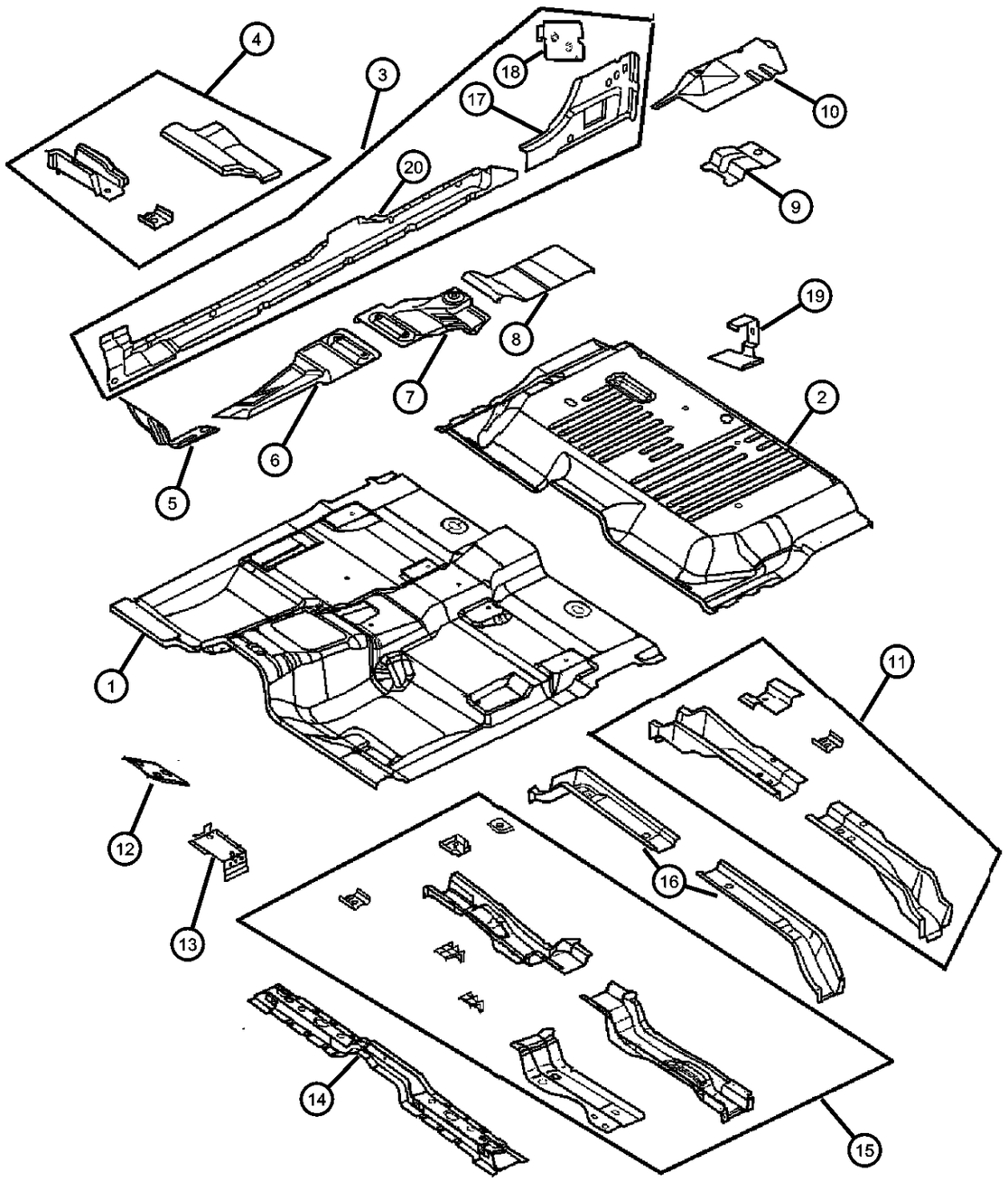

ITEM	PART NUMBER	QTY	LINE	SERIES	BODY	ENGINE	TRANS	TRIM	DESCRIPTION
1	55256236AD	1			84				PAN, Front Floor
2	55257121AA	1			84				PAN, Rear Floor
3									PANEL, Sill
	55257178AB	1			84				Right
	55257179AB	1			84				Left
4									PANEL, Underbody Front
	55256778AC	1			84				Right
	55256779AC	1			84				Left
5									SHIELD, Heat
	55255819AD	1							Left
	55257336AB	1							Right
6	55257300AC	1							SHIELD, Heat
7	55256724AB	1			84				SHIELD, Heat
8	55257259AB	1			84				SHIELD, HeatMiddle
9	55257291AA	1			84				BRACKETMiddle
10									BRACKET, Seat Support
	55257340AA	1			84				Right
	55257341AA	1			84				Left
11									PANEL, Underbody Front
	55257122AA	1			84				Right
	55257123AA	1			84				Left
12	55255819AD	1							SHIELD, HeatDash, Front Left
13	55256988AD	1			84				BRACKET, Electronic Control Unit
14	55257346AA	1			84				CROSSMEMBER, Front Floor
15									PANEL, Underbody Front
	55257118AA	1			84				Right
	55257119AA	1			84				Left
16									PANEL, Underbody Front
	55257312AA	1			84				Right
	55257313AA	1			84				Left
17									EXTENSION, Side Sill
	55257132AA	1			84				Right
	55257133AA	1			84				Left

DAKOTA (AN)

SERIES	LINE	BODY	ENGINE	TRANSMISSION
L = Dakota (All)	1 = Dakota 2WD	61 = Regular Cab (112 WB)	EPE = 2.5L 4 Cylinder	DGK = 4 Speed Automatic 42RE
	5 = Dakota 4WD	31 = Club Cab (131 WB)	EHC = 3.9L 6 Cylinder	DGT = 4 Speed Automatic 46RE
		84 = Quad Cab (131 WB)	EML = 5.0L 8 Cylinder	DDC = 5 Speed HD Manual
			EVA = 4.7L Magnum V8	DDK = 5 Speed HD Manual
			EP0 = All 2.5L	DG4 = Multispeed Automatic 45RFE
			EH0 = All 3.9L	DG0 = All Automatic Transmissions
			EM0 = All 5.9L	DBB = All Manual Transmissions
			EV0 = All 4.7L	

AR = use ase required - = Non illustrrated part

Floor Pan, 4 Door
Figure SAN-225

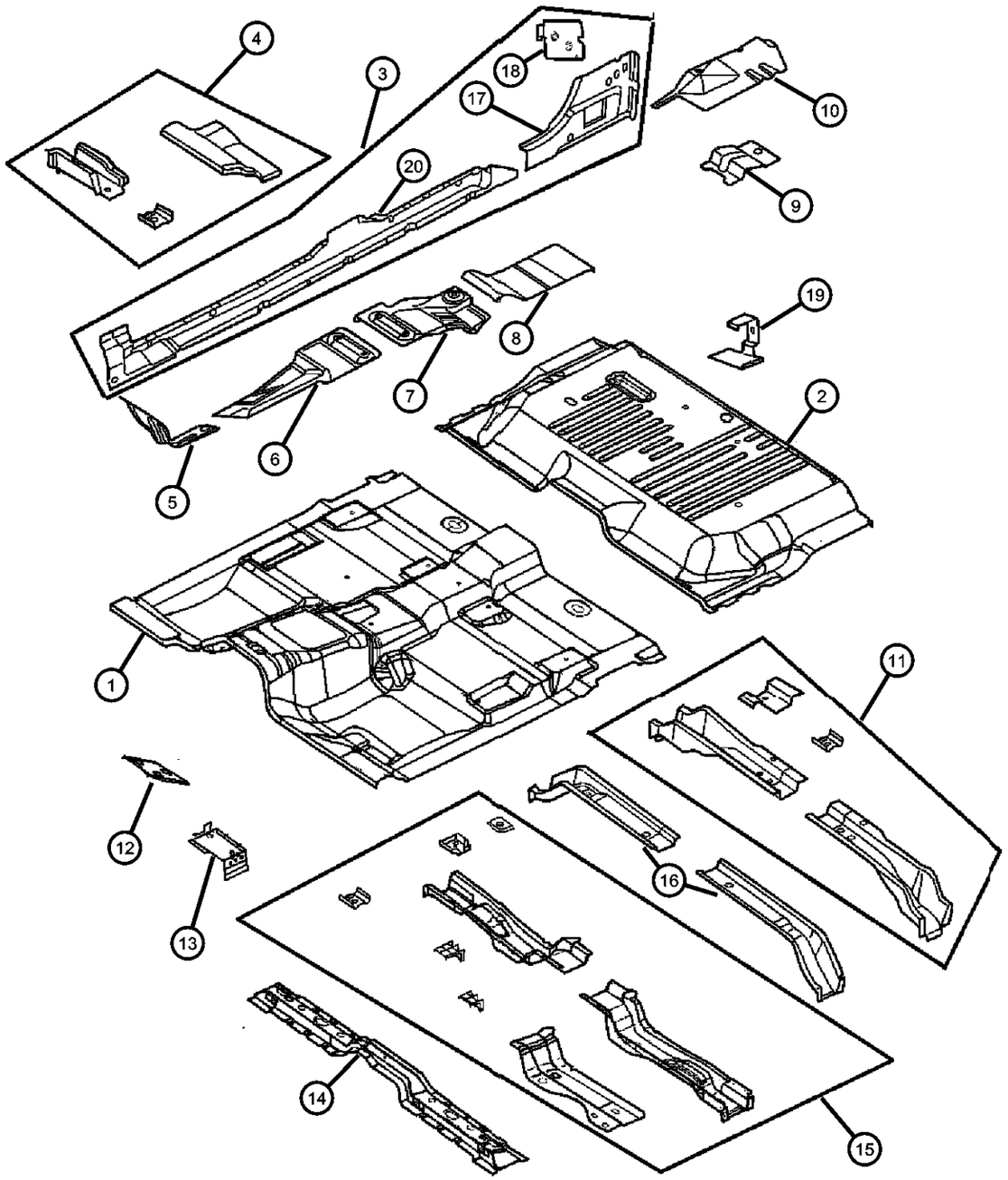

ITEM	PART NUMBER	QTY	LINE	SERIES	BODY	ENGINE	TRANS	TRIM	DESCRIPTION
18									REINFORCEMENT, Seat Belt
	55255544AB	1			84				Right
	55255545AB	1			84				Left
19	55257124AC	1			84				BRACKET
20									PANEL, Sill
	55362004AA	1			84				Right
	55362005AA	1			84				Left

DAKOTA (AN)

SERIES	LINE	BODY	ENGINE	TRANSMISSION
L = Dakota (All)	1 = Dakota 2WD	61 = Regular Cab (112 WB)	EPE = 2.5L 4 Cylinder	DGK = 4 Speed Automatic 42RE
	5 = Dakota 4WD	31 = Club Cab (131 WB)	EHC = 3.9L 6 Cylinder	DGT = 4 Speed Automatic 46RE
		84 = Quad Cab (131 WB)	EML = 5.0L 8 Cylinder	DDC = 5 Speed HD Manual
			EVA = 4.7L Magnum V8	DDK = 5 Speed HD Manual
			EP0 = All 2.5L	DG4 = Multispeed Automatic 45RFE
			EH0 = All 3.9L	DG0 = All Automatic Transmissions
			EM0 = All 5.9L	DBB = All Manual Transmissions
			EV0 = All 4.7L	

Floor Box And Panel
Figure SAN-230

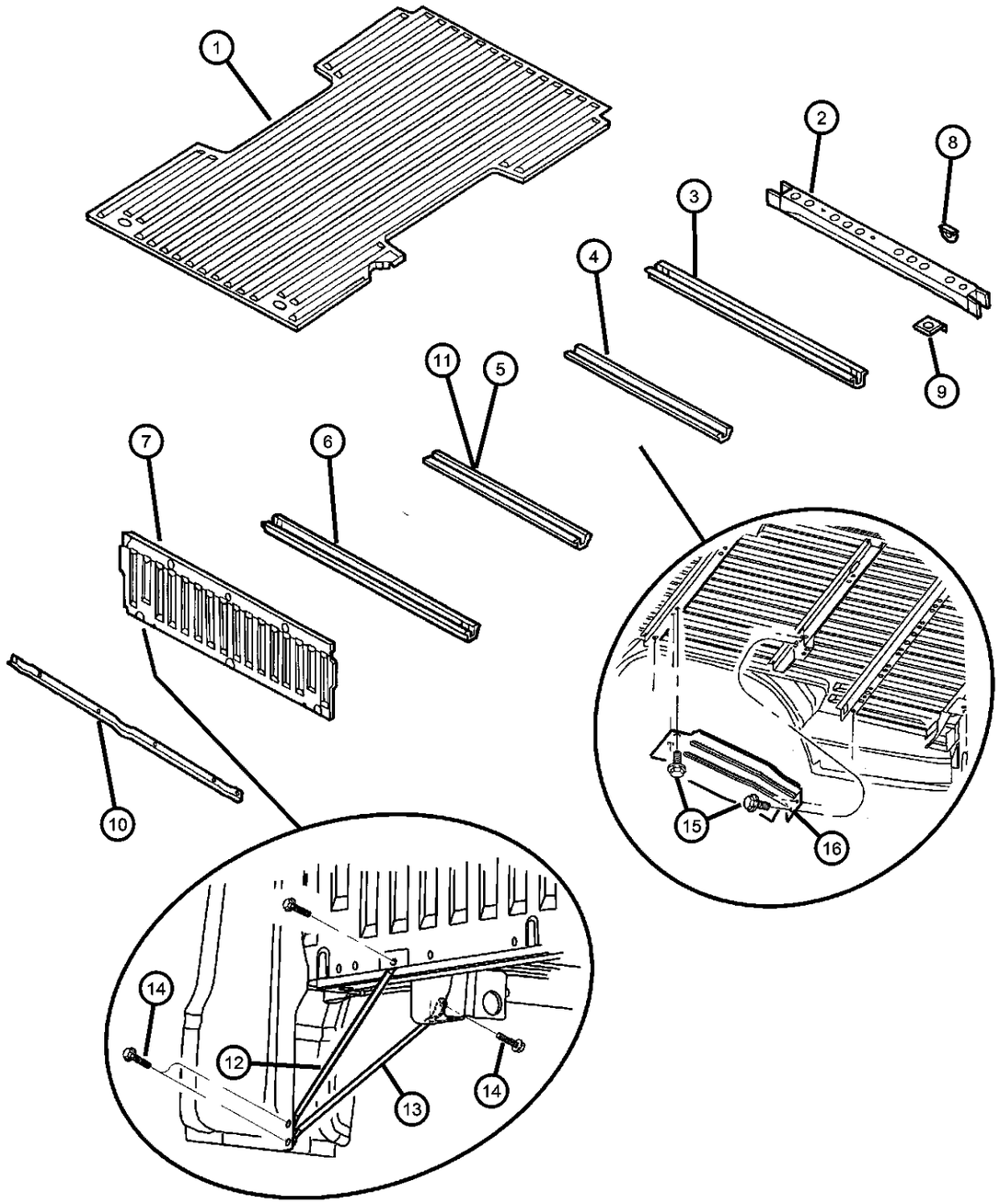

ITEM	PART NUMBER	QTY	LINE	SERIES	BODY	ENGINE	TRANS	TRIM	DESCRIPTION
1									PANEL, Box Floor
	55257144AA	1			84				
	55257379AA	1			31, 61				
2									SILL, Rear Cross
	55257386AB	1			84				
		1			31, 61				
3									SILL, Box
	55256563AD	1			31, 61				
		1			84				
4									CROSSMEMBER, Front Floor
	55256567	1			31, 61				Crossmember #3
		1			84				Without Brackets
	55362011AA	1			84				With Brackets
5	55256562AC	1			31, 61				SILL, Box, Crossmember #2
6									CROSSMEMBER, Front Floor
	55256559AE	1			31, 61				
	55257474AA	1			84				
7									PANEL, Front Box
	55362027AA	1			84				
		1			31, 61				
8									BRACKET, Winch
	55256808	1			84				
		1			31, 61				
9									TAPPING PLATE, Sill to Frame
	55345442	2			84				
		2			31, 61				
10	55256943AD	1							SEAL, Body Side
11	55257484AA	1			84				CROSSMEMBER, Front Floor
12	55362025AA	2			84				BRACE, Box Outer to Box Front
13									BRACE, Floor Pan
	55257486AA	1			84				Front Box Outer Box to Floor, Right
	55362024AA	1			84				Front Box Outer Box to Floor, Left

DAKOTA (AN)

SERIES	LINE	BODY	ENGINE	TRANSMISSION
L = Dakota (All)	1 = Dakota 2WD	61 = Regular Cab (112 WB)	EPE = 2.5L 4 Cylinder	DGK = 4 Speed Automatic 42RE
	5 = Dakota 4WD	31 = Club Cab (131 WB)	EHC = 3.9L 6 Cylinder	DGT = 4 Speed Automatic 46RE
		84 = Quad Cab (131 WB)	EML = 5.0L 8 Cylinder	DDC = 5 Speed HD Manual
			EVA = 4.7L Magnum V8	DDK = 5 Speed HD Manual
			EP0 = All 2.5L	DG4 = Multispeed Automatic 45RFE
			EH0 = All 3.9L	DG0 = All Automatic Transmissions
			EM0 = All 5.9L	DBB = All Manual Transmissions
			EV0 = All 4.7L	

Floor Box And Panel
Figure SAN-230

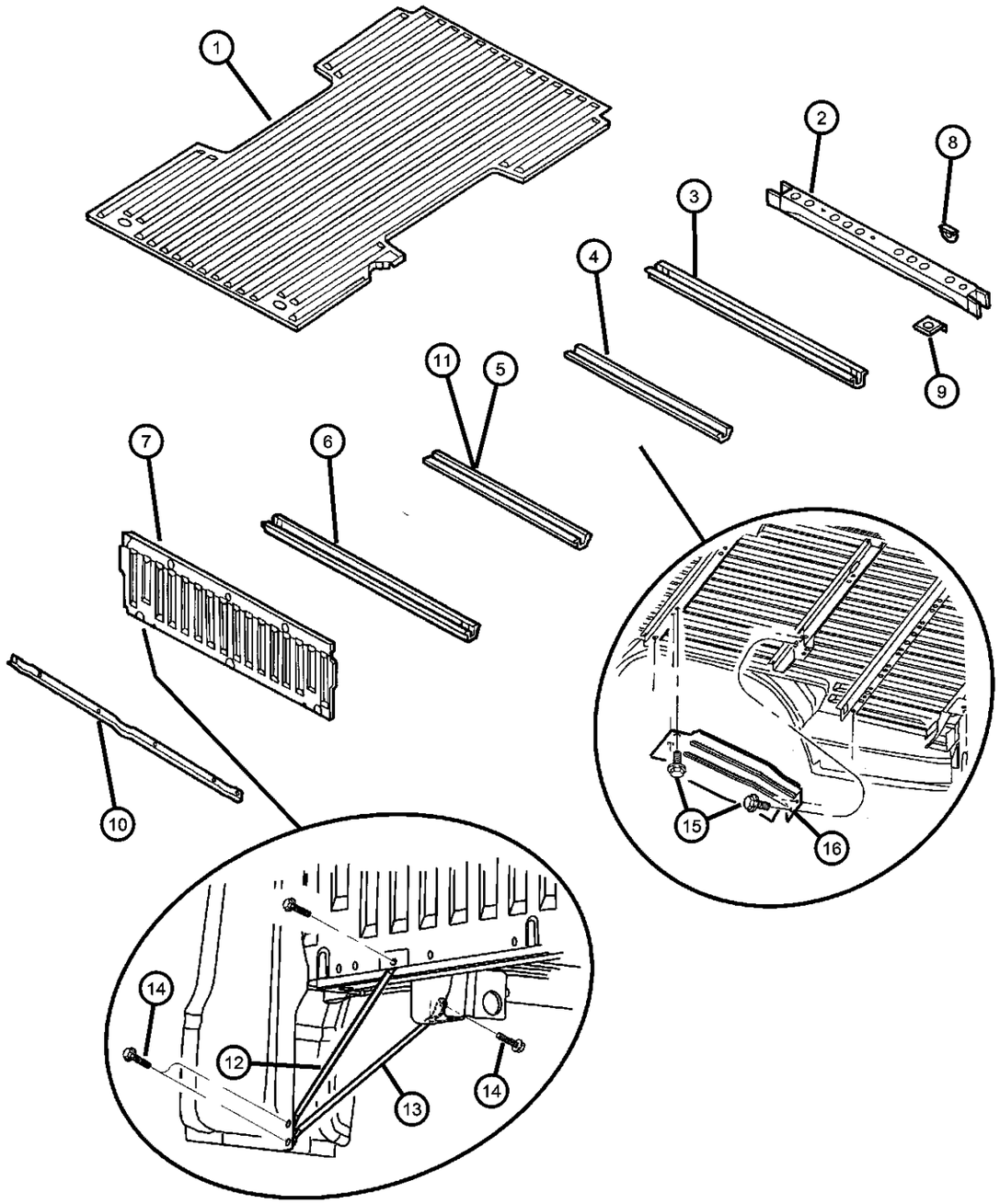

ITEM	PART NUMBER	QTY	LINE	SERIES	BODY	ENGINE	TRANS	TRIM	DESCRIPTION
14	06101455	8			84				SCREW AND WASHER, Hex Head, M6x1x20
15	06036237AA	4			84				SCREW
16	55362021AA	1			84				SHIELD, Heat

DAKOTA (AN)

SERIES	LINE	BODY	ENGINE	TRANSMISSION
L = Dakota (All)	1 = Dakota 2WD	61 = Regular Cab (112 WB)	EPE = 2.5L 4 Cylinder	DGK = 4 Speed Automatic 42RE
	5 = Dakota 4WD	31 = Club Cab (131 WB)	EHC = 3.9L 6 Cylinder	DGT = 4 Speed Automatic 46RE
		84 = Quad Cab (131 WB)	EML = 5.0L 8 Cylinder	DDC = 5 Speed HD Manual
			EVA = 4.7L Magnum V8	DDK = 5 Speed HD Manual
			EP0 = All 2.5L	DG4 = Multispeed Automatic 45RFE
			EH0 = All 3.9L	DG0 = All Automatic Transmissions
			EM0 = All 5.9L	DBB = All Manual Transmissions
			EV0 = All 4.7L	

Plugs Floor Pan
Figure SAN-310

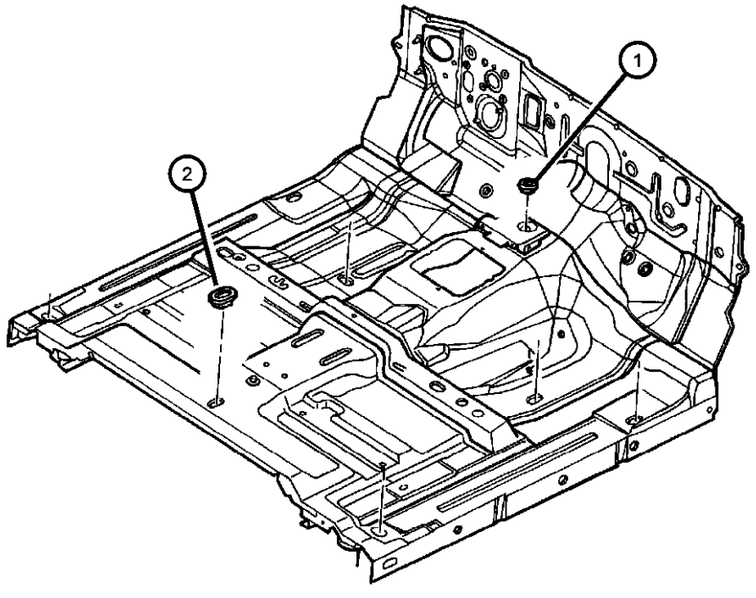

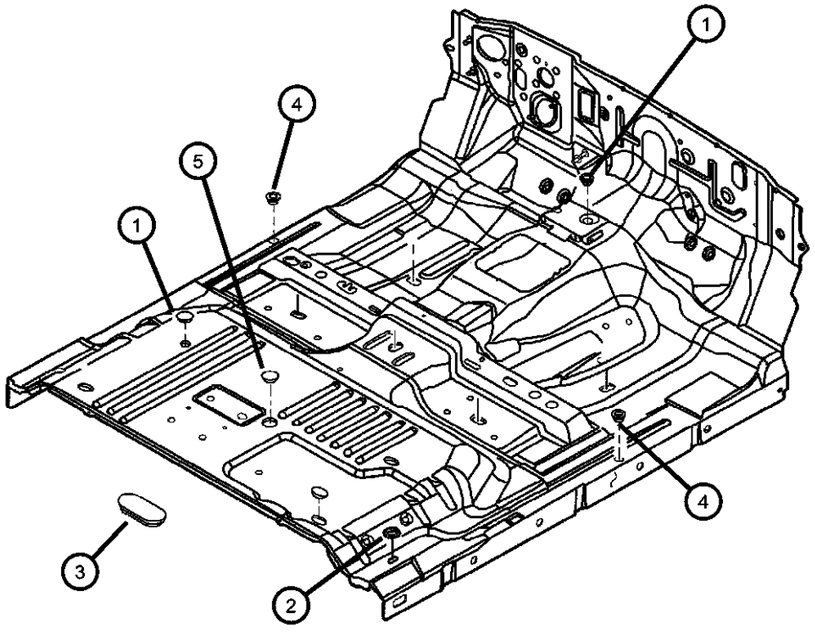

ITEM	PART NUMBER	QTY	LINE	SERIES	BODY	ENGINE	TRANS	TRIM	DESCRIPTION
1	55257380AA	1							PLUG
2									PLUG, Floor Pan
	04586055	6			61				
		12			31				
		8			84				
3	04586054	2			31				PLUG, Floor Pan
4									PLUG
	01774076	4			31, 61				
		6			84				
5	55362061AA	1			84				PLUG

DAKOTA (AN)

SERIES	LINE	BODY	ENGINE	TRANSMISSION
L = Dakota (All)	1 = Dakota 2WD	61 = Regular Cab (112 WB)	EPE = 2.5L 4 Cylinder	DGK = 4 Speed Automatic 42RE
	5 = Dakota 4WD	31 = Club Cab (131 WB)	EHC = 3.9L 6 Cylinder	DGT = 4 Speed Automatic 46RE
		84 = Quad Cab (131 WB)	EML = 5.0L 8 Cylinder	DDC = 5 Speed HD Manual
			EVA = 4.7L Magnum V8	DDK = 5 Speed HD Manual
			EP0 = All 2.5L	DG4 = Multispeed Automatic 45RFE
			EH0 = All 3.9L	DG0 = All Automatic Transmissions
			EM0 = All 5.9L	DBB = All Manual Transmissions
			EV0 = All 4.7L	

Plugs Miscellaneous
Figure SAN-320

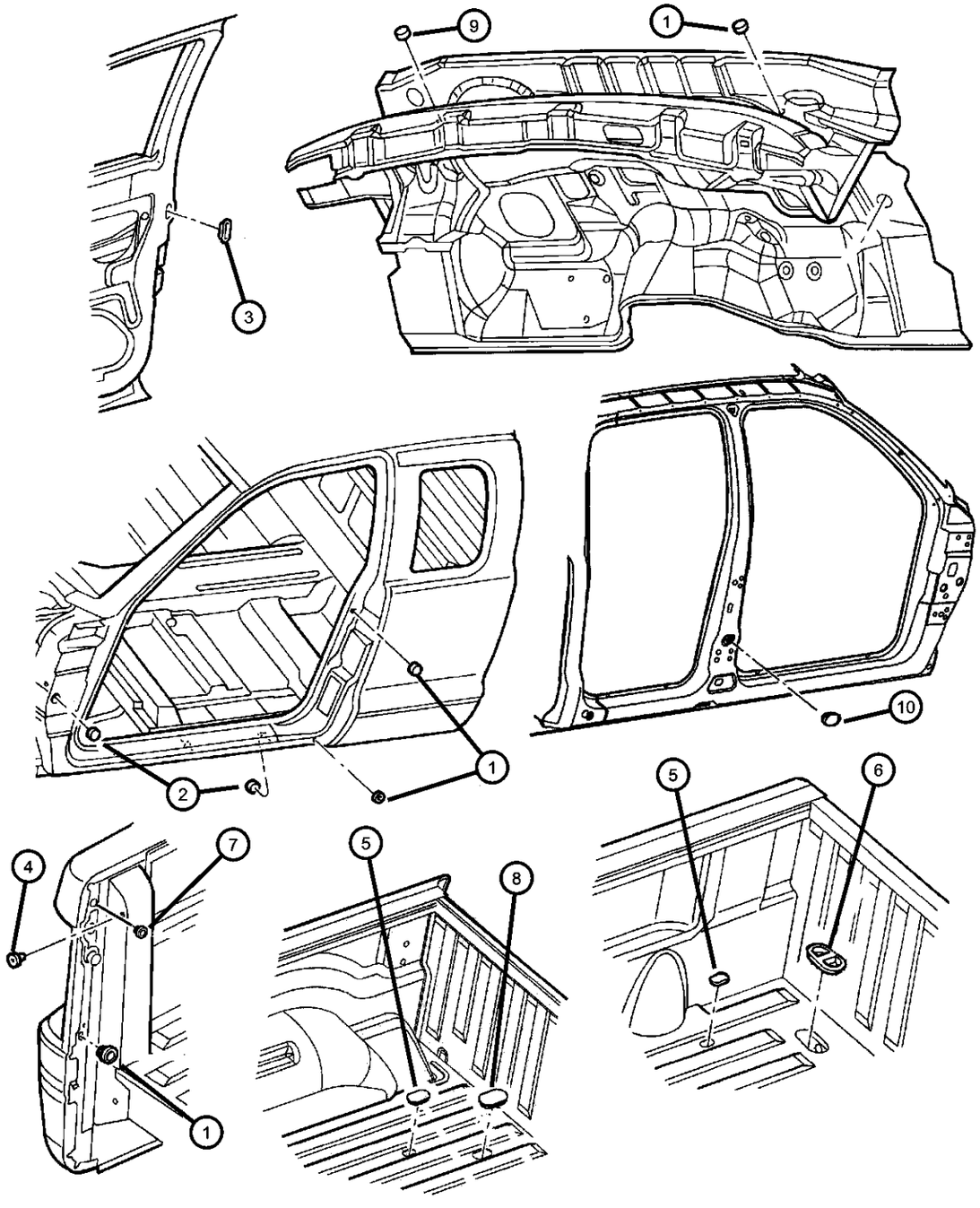

ITEM	PART NUMBER	QTY	LINE	SERIES	BODY	ENGINE	TRANS	TRIM	DESCRIPTION
1									PLUG
	01774076	1							
		2							
2	55257380AA	1							PLUG, 25mm
3									PLUG, Door
	05257081	2			31, 61				Inner Panel, Door
		4			84				Inner Panel,
4	03639325	2							BUMPER, Rubber
5	04440486	2							PLUG, Body, 19.05mm x 31.75mm, Slot
6	55276319AA	2			31, 61				PLUG, Floor
7	02860332	2							PLUG, Anti-Rattle
8	55257378AA	2			84				PLUG
9	04373728	1							PLUG
10	55257088AA	2			84				PLUG, Access Hole

DAKOTA (AN)

SERIES	LINE	BODY	ENGINE	TRANSMISSION
L = Dakota (All)	1 = Dakota 2WD	61 = Regular Cab (112 WB)	EPE = 2.5L 4 Cylinder	DGK = 4 Speed Automatic 42RE
	5 = Dakota 4WD	31 = Club Cab (131 WB)	EHC = 3.9L 6 Cylinder	DGT = 4 Speed Automatic 46RE
		84 = Quad Cab (131 WB)	EML = 5.0L 8 Cylinder	DDC = 5 Speed HD Manual
			EVA = 4.7L Magnum V8	DDK = 5 Speed HD Manual
			EP0 = All 2.5L	DG4 = Multispeed Automatic 45RFE
			EH0 = All 3.9L	DG0 = All Automatic Transmissions
			EM0 = All 5.9L	DBB = All Manual Transmissions
			EV0 = All 4.7L	

Fender Front
Figure SAN-410

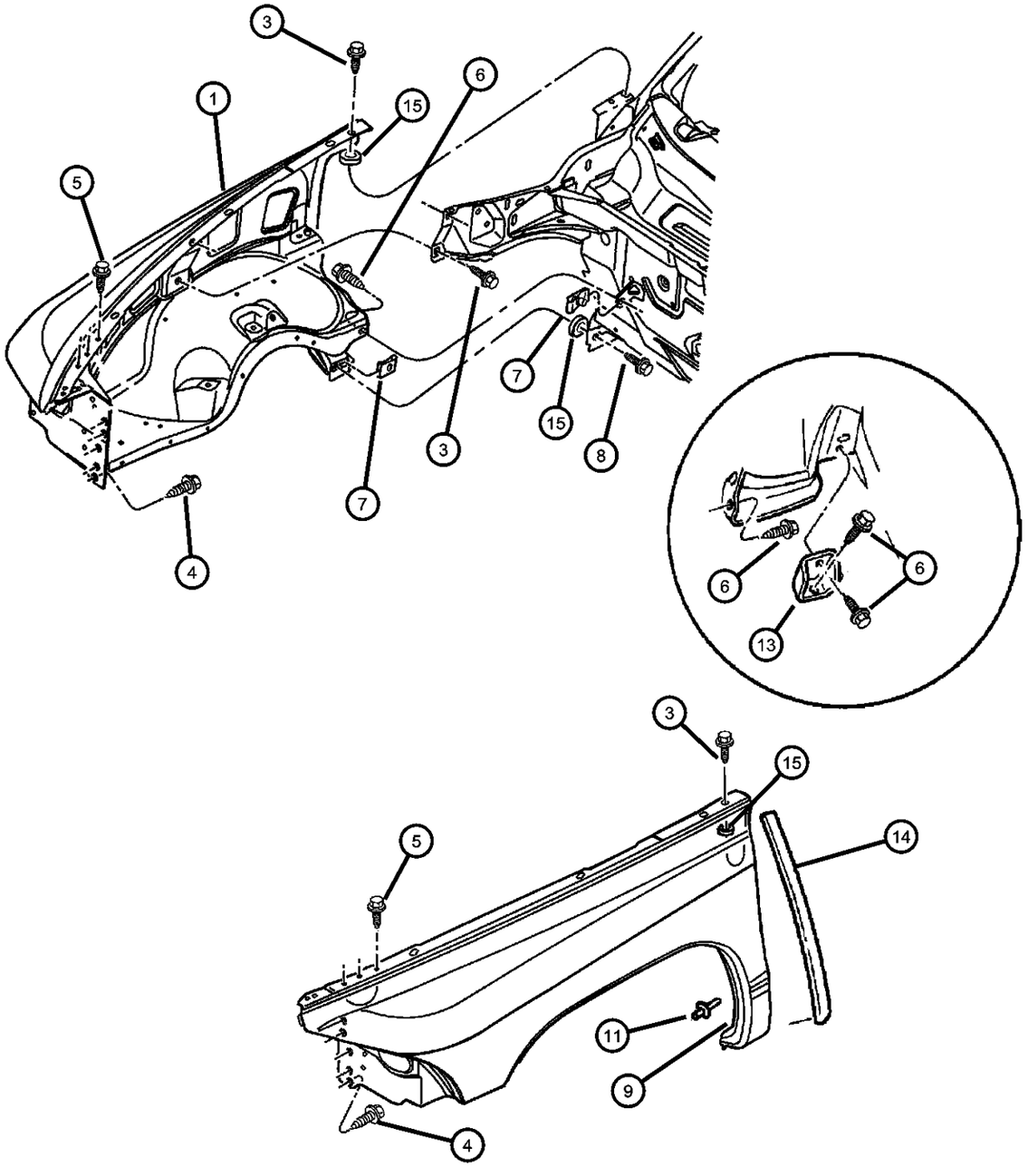

ITEM	PART NUMBER	QTY	LINE	SERIES	BODY	ENGINE	TRANS	TRIM	DESCRIPTION
1									FENDER
	55255030AD	1							Right
	55255031AD	1							Left
-2	06505526AA	1							STUDGround
3	06503757	4							SCREW AND WASHER, Hex Head, M8-1.25x22.00
4	06502282	10							SCREW, Hex Head, M8x1.25x30, Fender Inner Front to Radiator Closure
5	06102132AA	6							SCREW, Hex Head, M6x1x20
6	06505442AA	2							SCREW AND WASHER, Hex Head, M8-1.25x22.00
7	06101283	2							U-NUT, M8x1.25
8	06503661	2							SCREW AND WASHER, Hex Head, M8x1.25x25
9									LINER, Front Fender
	55256848AE	1							Includes Liner And Shield, Right
	55257061AF	1							Includes Liner And Panel Fender Side Shield, Left
-10	55257063AA	1							PANEL, Fender Side Shield
11	34201631	12							RIVET, M6.25x28 Black, Plastic
-12	06030441	1							PIN, Retainer, Wheelhouse Liner Attach
13									BRACKET, Fender Mounting
	55255930	1							Right
	55255931	1							Left
14									SEAL, Fender To Cowl
	55256050AB	1							Right
	55256051AB	1							Left
15	00120395	AR							WASHER, Flat

DAKOTA (AN)

SERIES	LINE	BODY	ENGINE	TRANSMISSION
L = Dakota (All)	1 = Dakota 2WD	61 = Regular Cab (112 WB)	EPE = 2.5L 4 Cylinder	DGK = 4 Speed Automatic 42RE
	5 = Dakota 4WD	31 = Club Cab (131 WB)	EHC = 3.9L 6 Cylinder	DGT = 4 Speed Automatic 46RE
		84 = Quad Cab (131 WB)	EML = 5.0L 8 Cylinder	DDC = 5 Speed HD Manual
			EVA = 4.7L Magnum V8	DDK = 5 Speed HD Manual
			EP0 = All 2.5L	DG4 = Multispeed Automatic 45RFE
			EH0 = All 3.9L	DG0 = All Automatic Transmissions
			EM0 = All 5.9L	DBB = All Manual Transmissions
			EV0 = All 4.7L	

AR = use ase required - = Non illustrrated part

Hood and Release
Figure SAN-510

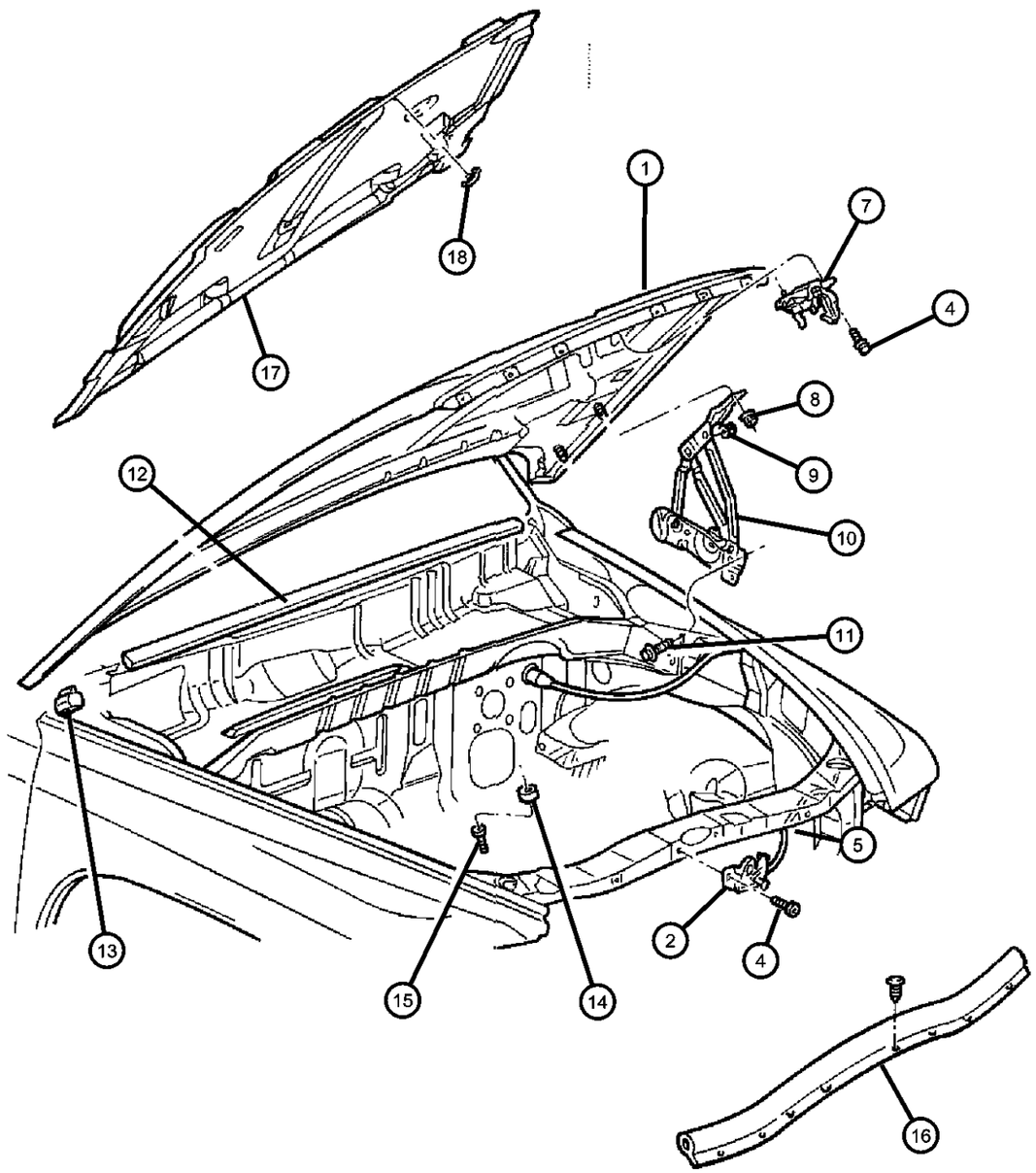

ITEM	PART NUMBER	QTY	LINE	SERIES	BODY	ENGINE	TRANS	TRIM	DESCRIPTION
1	55274716AD	1							HOOD
2	55255451	1							LATCH, Hood
-3	04215966	1							LABEL, Equipmemt Identification
4	06101455	2							SCREW AND WASHER, Hex Head, M6x1x20
5	55256496AB	1							RELEASE, Hood Latch
-6	06503794	4							CLIP, M6.3x11.2, Hood Release
7	55257390AA	1							STRIKER, Hood Latch
8	06100051	4							NUT AND WASHER, Hex Nut-Coned Washer, M8 x 1.25
9	06100051	4							NUT, Hex Lock, M8x1.25, (NOT SERVICED)
10									HINGE, Hood
	55255448AF	1							Right
	55255449AF	1							Left
11	06503661	6							SCREW AND WASHER, Hex Head, M8x1.25x25
12	55255099	1							SEAL, Hood To Cowl
13	55256768AB	2							BUMPER, Hood to Fender
14	02276804	2							BUMPER, Hood, Rubber
15	02276804	2							SCREW, Round Head, .312-18x1.50, (NOT SERVICED)
16	55055842AA	1							SEAL, Hood, Variform to Hood Inner
17	55216161AE	1							PAD, Hood Silencer
18	06003351	13							RETAINER, Hood Insulation, .415x.690

DAKOTA (AN)

SERIES	LINE	BODY	ENGINE	TRANSMISSION
L = Dakota (All)	1 = Dakota 2WD	61 = Regular Cab (112 WB)	EPE = 2.5L 4 Cylinder	DGK = 4 Speed Automatic 42RE
	5 = Dakota 4WD	31 = Club Cab (131 WB)	EHC = 3.9L 6 Cylinder	DGT = 4 Speed Automatic 46RE
		84 = Quad Cab (131 WB)	EML = 5.0L 8 Cylinder	DDC = 5 Speed HD Manual
			EVA = 4.7L Magnum V8	DDK = 5 Speed HD Manual
			EP0 = All 2.5L	DG4 = Multispeed Automatic 45RFE
			EH0 = All 3.9L	DG0 = All Automatic Transmissions
			EM0 = All 5.9L	DBB = All Manual Transmissions
			EV0 = All 4.7L	

AR = use ase required - = Non illustrrated part

Cowl Screen And Shield
Figure SAN-610

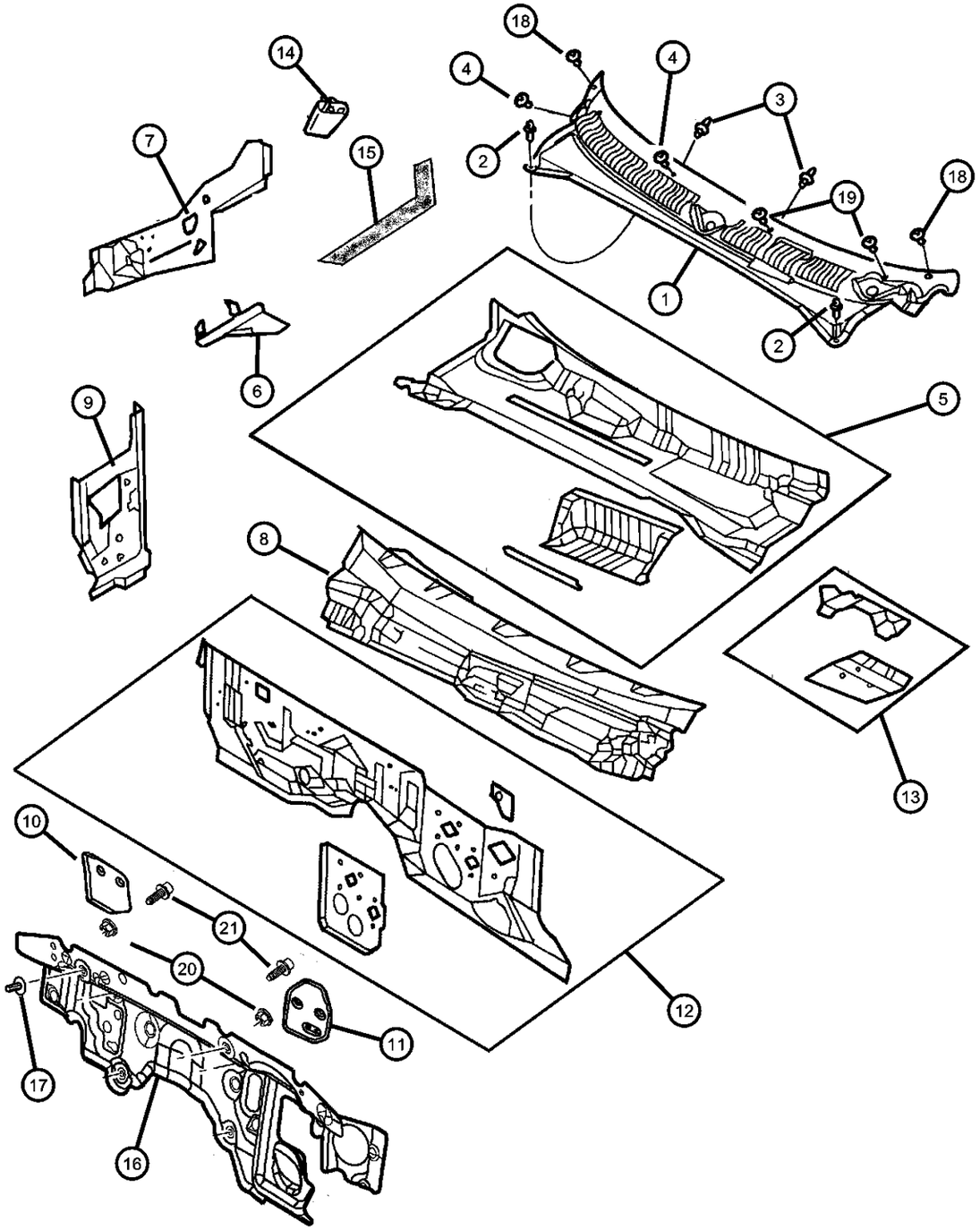

ITEM	PART NUMBER	QTY	LINE	SERIES	BODY	ENGINE	TRANS	TRIM	DESCRIPTION
Sales Code: [EVA] = New Generation Magnum 4.7L, V8									
1	55055986AF	1							PANEL, Cowl
2	06030441	2							PIN, Retainer
3	06030441	2							STUD, M6x1.00xM6.3x1.81x32.00, (NOT SERVICED)
4	06506306AA	4							NUT, Plastic
5	55255708AF	1							PANEL, Cowl Plenum Lower
6									REINFORCEMENT, Hood Hinge
	55255550	1							Right
	55255551	1							Left
7									PANEL, Plenum End
	55255512AC	1							Right
	55255513AC	1							Left
8	55255515AE	1							PANEL, Cowl
9									PANEL, Cowl Side
	55255090AD	1							Right
	55255091AD	1							Left
10	55257336AB	1							SHIELD, HeatRight
11	55255819AD	1							SHIELD, HeatLeft
12									PANEL, Dash
	55255082AE	1							Up to 10/26/01
	55255082AI	1							After 10/26/01
13	55255881	1							SUPPORT, Steering ColumnUpper
14	55035931	2							SEAL, Plenum Drain
15									SEAL, Cowl Plenum Cover, Also Serviced in , PANEL, Cowl
	04886010AA	1							Right
	04886011AA	1							Left
16									SILENCER, Dash Panel
	55361007AC	1							With Sales Code [EVA], Up to 1/28/02
	55361007AE	1							With Sales Code [EVA], After 1/28/02
17	06506099AA	6							NUT, Push-On Spring, 3
18	06504980AA	2							PUSH PIN, M5x13

DAKOTA (AN)

SERIES	LINE	BODY	ENGINE	TRANSMISSION
L = Dakota (All)	1 = Dakota 2WD	61 = Regular Cab (112 WB)	EPE = 2.5L 4 Cylinder	DGK = 4 Speed Automatic 42RE
	5 = Dakota 4WD	31 = Club Cab (131 WB)	EHC = 3.9L 6 Cylinder	DGT = 4 Speed Automatic 46RE
		84 = Quad Cab (131 WB)	EML = 5.0L 8 Cylinder	DDC = 5 Speed HD Manual
			EVA = 4.7L Magnum V8	DDK = 5 Speed HD Manual
			EP0 = All 2.5L	DG4 = Multispeed Automatic 45RFE
			EH0 = All 3.9L	DG0 = All Automatic Transmissions
			EM0 = All 5.9L	DBB = All Manual Transmissions
			EV0 = All 4.7L	

AR = use ase required - = Non illustrrated part

Cowl Screen And Shield
Figure SAN-610

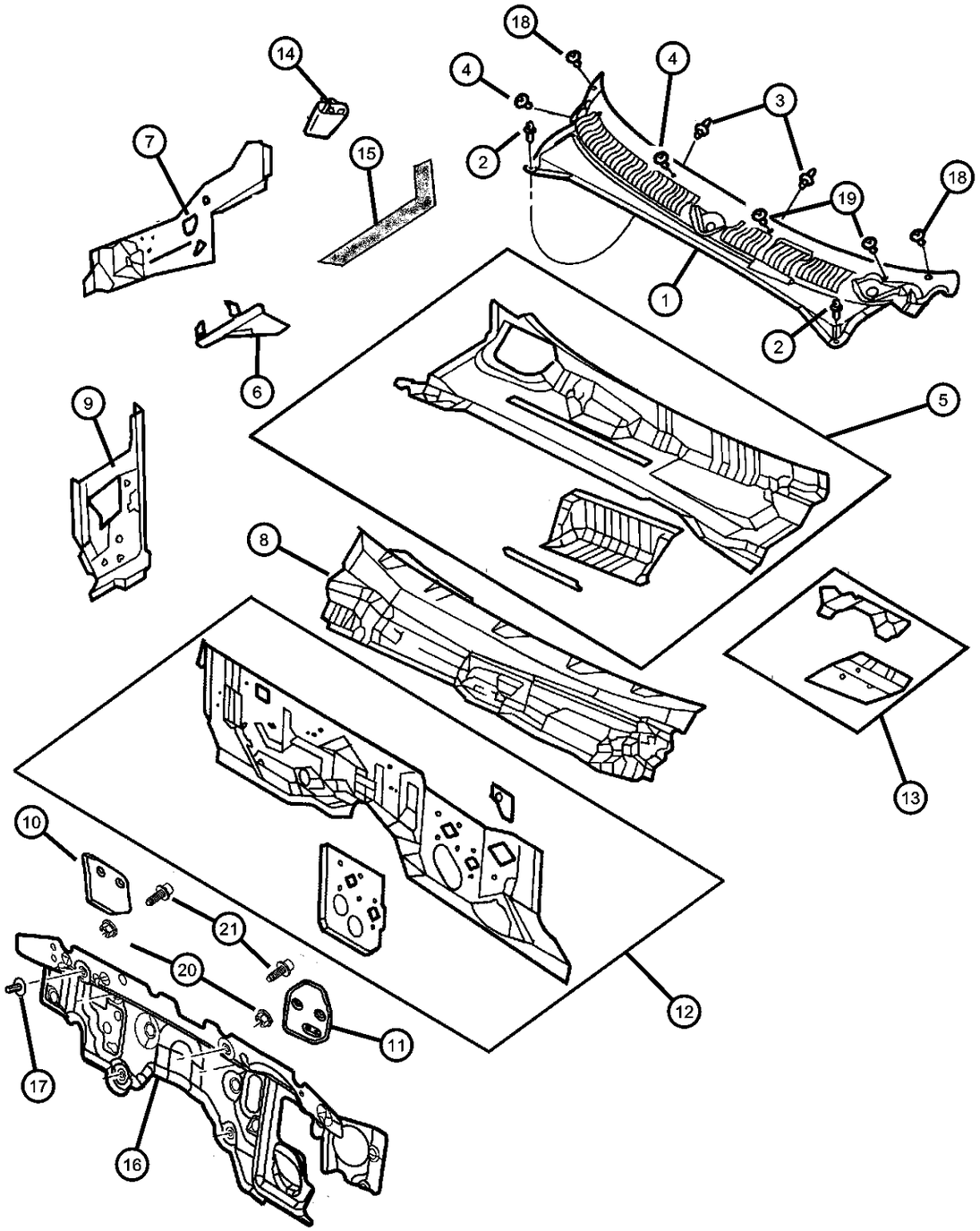

ITEM	PART NUMBER	QTY	LINE	SERIES	BODY	ENGINE	TRANS	TRIM	DESCRIPTION
19	06504980AA	2							STUD, [.250-14/.250-20x2.00], (NOT SERVICED)
20	06034402	6							NUT, Hex Flange, .25-7
21	06035017	6							SCREW, Hex Flange Head, .25-14x1.00
-22	06506816AA	1							U-NUT, M8x1.25

DAKOTA (AN)

SERIES	LINE	BODY	ENGINE	TRANSMISSION
L = Dakota (All)	1 = Dakota 2WD	61 = Regular Cab (112 WB)	EPE = 2.5L 4 Cylinder	DGK = 4 Speed Automatic 42RE
	5 = Dakota 4WD	31 = Club Cab (131 WB)	EHC = 3.9L 6 Cylinder	DGT = 4 Speed Automatic 46RE
		84 = Quad Cab (131 WB)	EML = 5.0L 8 Cylinder	DDC = 5 Speed HD Manual
			EVA = 4.7L Magnum V8	DDK = 5 Speed HD Manual
			EP0 = All 2.5L	DG4 = Multispeed Automatic 45RFE
			EH0 = All 3.9L	DG0 = All Automatic Transmissions
			EM0 = All 5.9L	DBB = All Manual Transmissions
			EV0 = All 4.7L	

Windshield And Mirror, Rear Window
Figure SAN-710

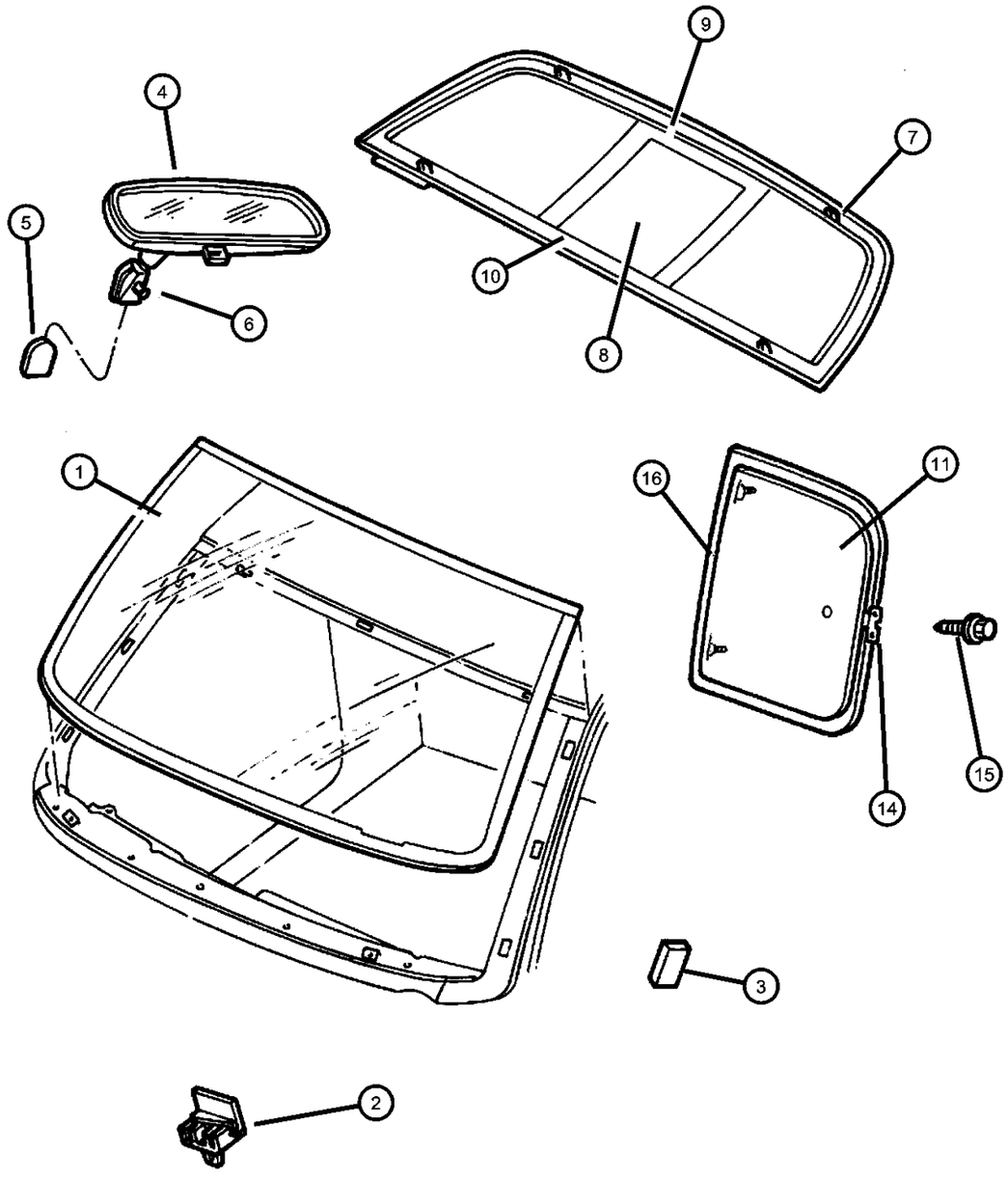

ITEM	PART NUMBER	QTY	LINE	SERIES	BODY	ENGINE	TRANS	TRIM	DESCRIPTION
1									WINDSHIELD
	05019268AB	1							30 Lite Package, With Shade Ban, Up to 6/23/01
	DW01412GBN								Collision Replacement Glass
	05083964AA	1							30 Lite Package, Without Shade Ban, After 6/23/01
2	55256967AC	2							SPACER, Windshield
3	55028214	4							SPACER, Windshield
4									MIRROR, Inside Rear View
	55077468AA	1							Prismatic
	55155380AB	1							Electrochromic
5	55076401	1							BUTTON, Rear View Mirror
6	05073472AA	1							SCREW
7									BACKLITE
	55255676AB	1							Sliding Privacy
	55257184AA	1			31, 84				Fixed Privacy Heated
	DB09680YPY								Collision Replacement Glass
	55257403AA	1							Fixed Tinted
	DB09591GTY								Collision Replacement Glass
8	04883392AA	1							GLASS, Backlite, Sliding
	DB09592YPY								Collision Replacement Glass
9	04883393AA	1							CHANNEL, Sliding Backlite, Upper Run With Center Stop
10	04883394AA	1							CHANNEL, Sliding Backlite, Lower run
11									GLASS, Quarter Window, Without The Seal
	55255668AC	1			31				Club Cab Only, For Quad Cab See Doors, Right
	DQ09198YPY								Collision Replacement Glass
	55255669AC	1			31				Club Cab Only, For Quad Cab See Doors, Left
	DQ09199YPY								Collision Replacement Glass
-12	04883391AA	1			31				GASKET, Hinge To Glass
-13	04339313	1			31				RETAINER PACKAGE, Vent and Stationary Glass
14	55362014AA	1			31				LATCH, Body Side Glass

DAKOTA (AN)

SERIES	LINE	BODY	ENGINE	TRANSMISSION
L = Dakota (All)	1 = Dakota 2WD	61 = Regular Cab (112 WB)	EPE = 2.5L 4 Cylinder	DGK = 4 Speed Automatic 42RE
	5 = Dakota 4WD	31 = Club Cab (131 WB)	EHC = 3.9L 6 Cylinder	DGT = 4 Speed Automatic 46RE
		84 = Quad Cab (131 WB)	EML = 5.0L 8 Cylinder	DDC = 5 Speed HD Manual
			EVA = 4.7L Magnum V8	DDK = 5 Speed HD Manual
			EP0 = All 2.5L	DG4 = Multispeed Automatic 45RFE
			EH0 = All 3.9L	DG0 = All Automatic Transmissions
			EM0 = All 5.9L	DBB = All Manual Transmissions
			EV0 = All 4.7L	

Windshield And Mirror, Rear Window
Figure SAN-710

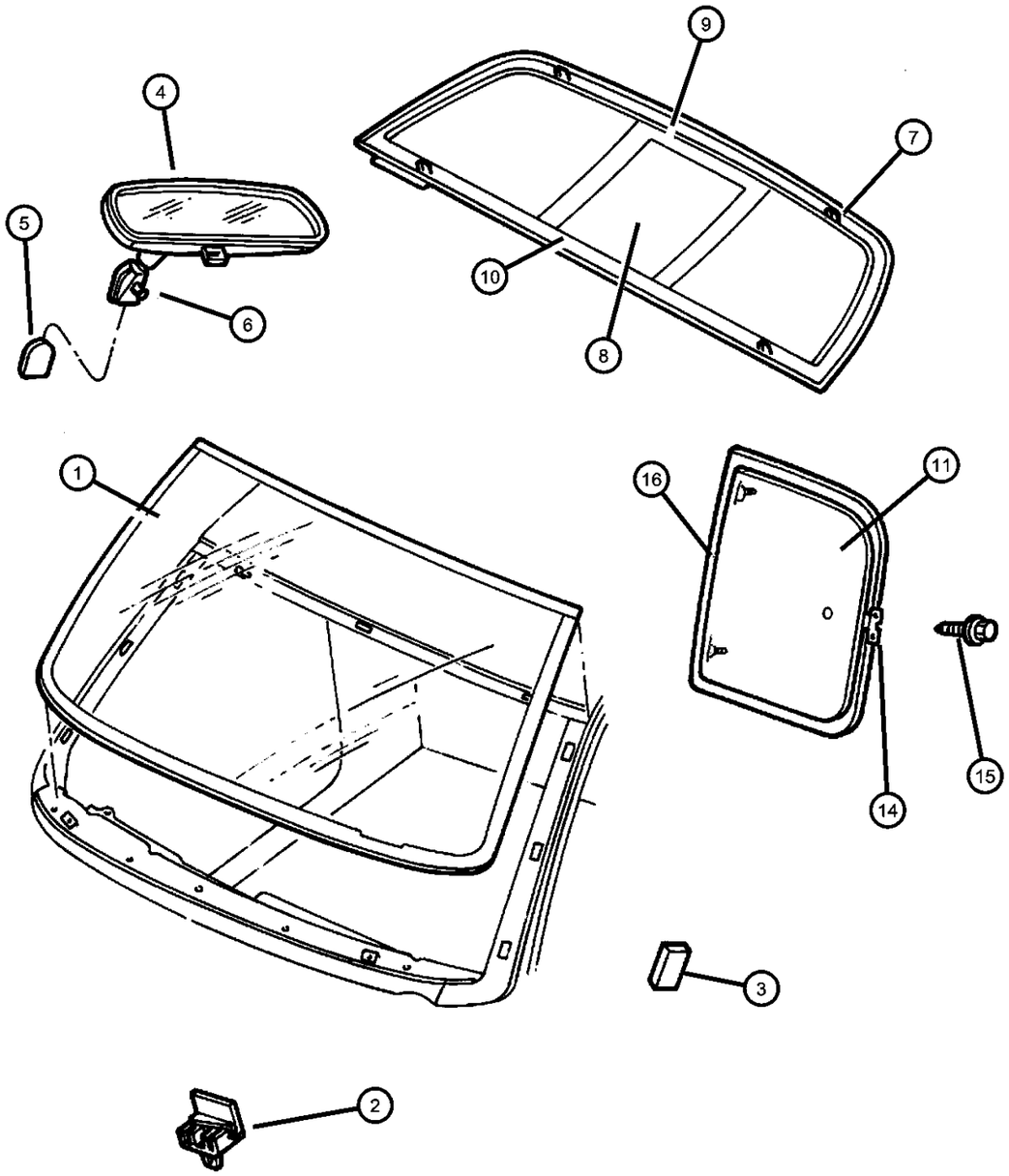

ITEM	PART NUMBER	QTY	LINE	SERIES	BODY	ENGINE	TRANS	TRIM	DESCRIPTION
15	06505903AA	4			31				SCREW AND WASHER, Self Tapping, M6x1x22
16	55255886	2			31				SEAL, Quarter Window

DAKOTA (AN)

SERIES	LINE	BODY	ENGINE	TRANSMISSION
L = Dakota (All)	1 = Dakota 2WD	61 = Regular Cab (112 WB)	EPE = 2.5L 4 Cylinder	DGK = 4 Speed Automatic 42RE
	5 = Dakota 4WD	31 = Club Cab (131 WB)	EHC = 3.9L 6 Cylinder	DGT = 4 Speed Automatic 46RE
		84 = Quad Cab (131 WB)	EML = 5.0L 8 Cylinder	DDC = 5 Speed HD Manual
			EVA = 4.7L Magnum V8	DDK = 5 Speed HD Manual
			EP0 = All 2.5L	DG4 = Multispeed Automatic 45RFE
			EH0 = All 3.9L	DG0 = All Automatic Transmissions
			EM0 = All 5.9L	DBB = All Manual Transmissions
			EV0 = All 4.7L	

Aperture Panel Bodyside Standard Cab
Figure SAN-810

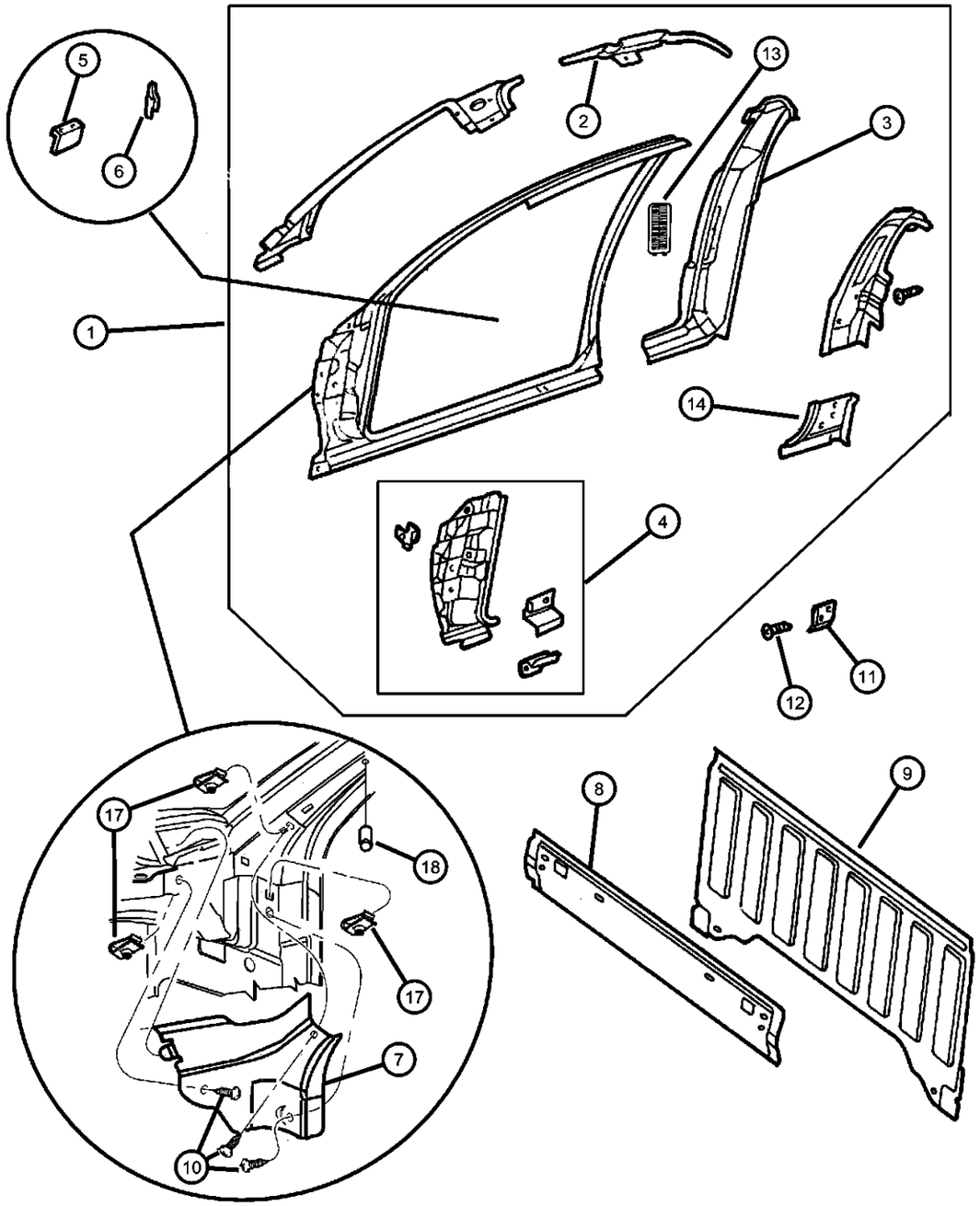

ITEM	PART NUMBER	QTY	LINE	SERIES	BODY	ENGINE	TRANS	TRIM	DESCRIPTION
1									PANEL, Body Side Aperture
	04883906AI	1			31, 61				Right
	04883907AI	1			31, 61				Left
2									RAIL, Roof
	55255538AB	1			61				Right
	55255539AB	1			61				Left
3									PANEL, Quarter
	55255518AC	1			61				Right
	55255519AC	1			61				Left
4									PANEL, Body Side Front
	55256968AB	1			31, 61				Right
	55256969AB	1			31, 61				Left
5									BRACKET, Aperture to Fender
	55255504AB	1			31, 61				Right
	55255505AB	1			31, 61				Left
6	04512871AB	2			31, 61				RETAINER, Door Lock Striker
7									REINFORCEMENT, Cowl Side
	55362022AA	1							Right
	55362023AA	1							Left
8	55257428AA	1			61, 84				REINFORCEMENT, Cab Back
9	55257325AA	1							PANEL, Cab Back
10	06101718	6							SCREW AND WASHER, Oval Head, M6x1x25
11									REINFORCEMENT, Seat Belt
	55255544AB	1			61				Right
	55255545AB	1			61				Left
12	06030441	2							PIN, Retainer
13	55056245AA	2							EXHAUSTER, Quarter Panel
14									PANEL, Quarter Inner
	55255914AC	1			61				Right
	55255915AC	1			61				Left
-15									BAFFLE, B Pillar
	55255728AB	1			31, 61				Right

DAKOTA (AN)

SERIES	LINE	BODY	ENGINE	TRANSMISSION
L = Dakota (All)	1 = Dakota 2WD	61 = Regular Cab (112 WB)	EPE = 2.5L 4 Cylinder	DGK = 4 Speed Automatic 42RE
	5 = Dakota 4WD	31 = Club Cab (131 WB)	EHC = 3.9L 6 Cylinder	DGT = 4 Speed Automatic 46RE
		84 = Quad Cab (131 WB)	EML = 5.0L 8 Cylinder	DDC = 5 Speed HD Manual
			EVA = 4.7L Magnum V8	DDK = 5 Speed HD Manual
			EP0 = All 2.5L	DG4 = Multispeed Automatic 45RFE
			EH0 = All 3.9L	DG0 = All Automatic Transmissions
			EM0 = All 5.9L	DBB = All Manual Transmissions
			EV0 = All 4.7L	

AR = use ase required - = Non illustrrated part

Aperture Panel Bodyside Standard Cab
Figure SAN-810

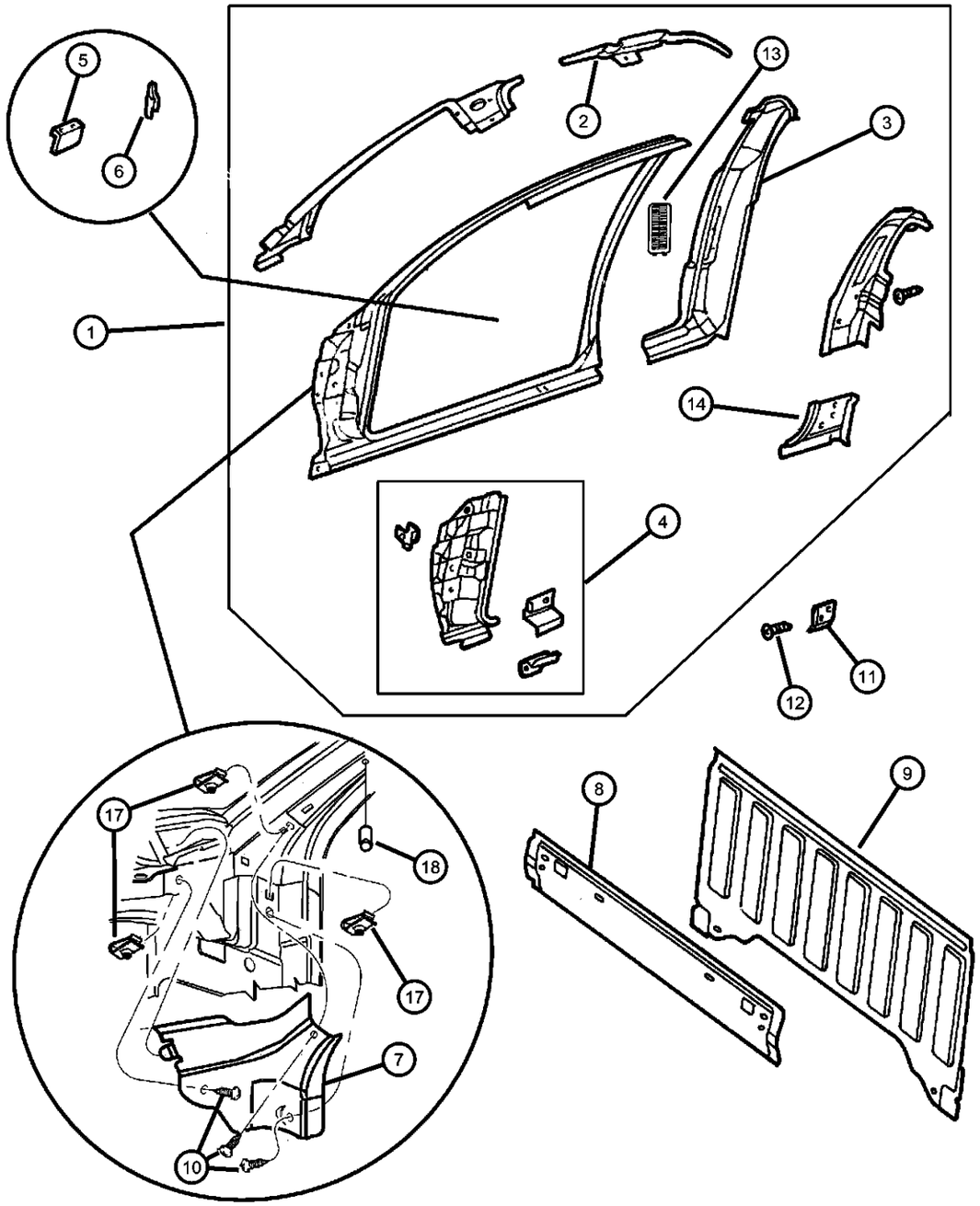

ITEM	PART NUMBER	QTY	LINE	SERIES	BODY	ENGINE	TRANS	TRIM	DESCRIPTION
	55255729AB	1			31, 61				Left
-16									BAFFLE, Windshield Pillar
	55255724AB	1			31, 61				Right
	55255725AB	1			31, 61				Left
17	06100041	6							U-NUT, .190-16
18	06507161AA	4							NUT

DAKOTA (AN)

SERIES	LINE	BODY	ENGINE	TRANSMISSION
L = Dakota (All)	1 = Dakota 2WD	61 = Regular Cab (112 WB)	EPE = 2.5L 4 Cylinder	DGK = 4 Speed Automatic 42RE
	5 = Dakota 4WD	31 = Club Cab (131 WB)	EHC = 3.9L 6 Cylinder	DGT = 4 Speed Automatic 46RE
		84 = Quad Cab (131 WB)	EML = 5.0L 8 Cylinder	DDC = 5 Speed HD Manual
			EVA = 4.7L Magnum V8	DDK = 5 Speed HD Manual
			EP0 = All 2.5L	DG4 = Multispeed Automatic 45RFE
			EH0 = All 3.9L	DG0 = All Automatic Transmissions
			EM0 = All 5.9L	DBB = All Manual Transmissions
			EV0 = All 4.7L	

Aperture Panel Bodyside Club Cab
Figure SAN-820

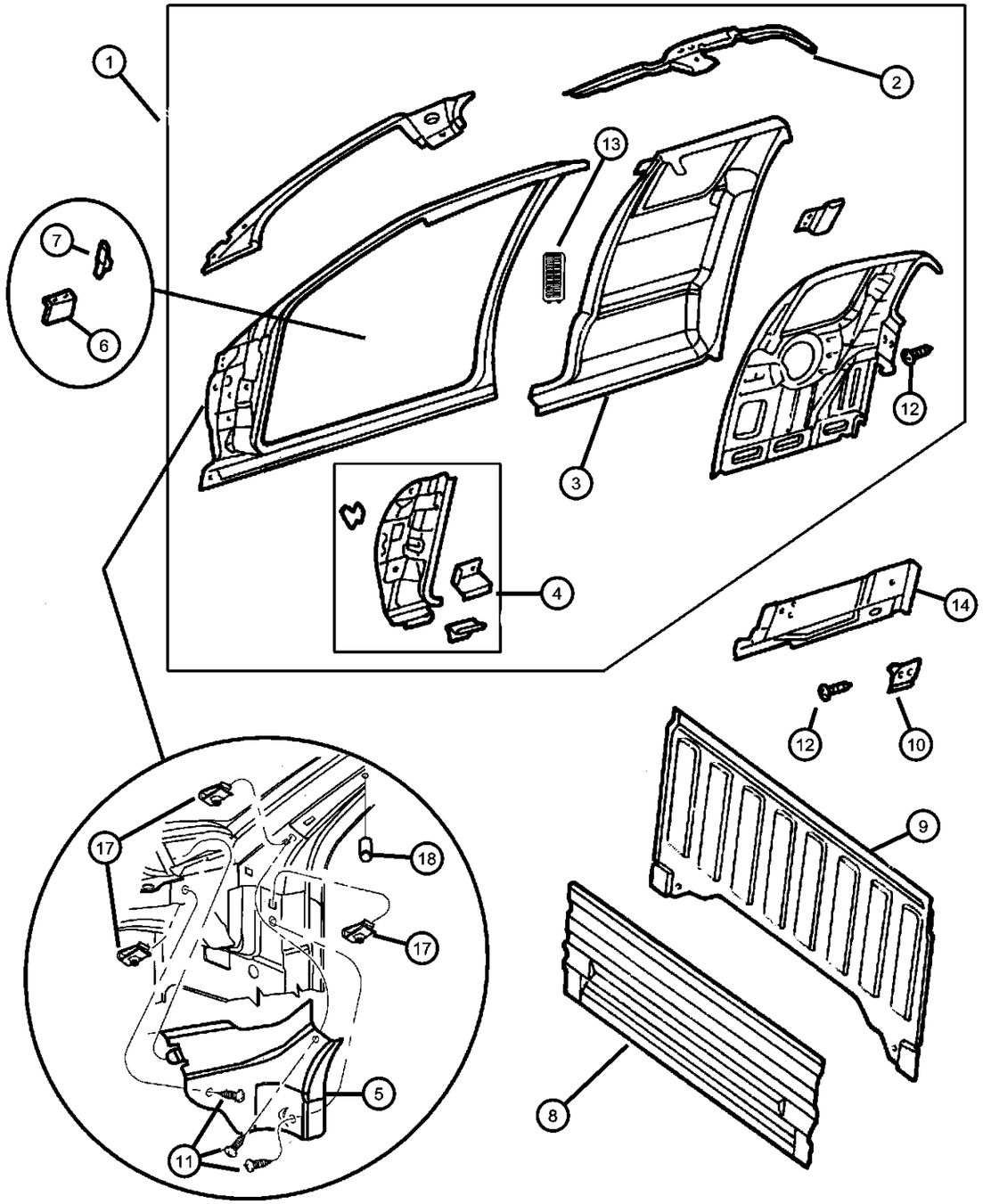

ITEM	PART NUMBER	QTY	LINE	SERIES	BODY	ENGINE	TRANS	TRIM	DESCRIPTION
1									PANEL, Body Side Aperture
	04883908AI	1			31, 61				Right
	04883909AI	1			31, 61				Left
2									RAIL, Roof
	55255541AC	1			31				Left
	55257472AA	1			31				Right
3									PANEL, Quarter Extension
	55255520AB	1			31				Right
	55255521AB	1			31				Left
4									PANEL, Body Side Front
	55256968AB	1			31, 61				Right
	55256969AB	1			31, 61				Left
5									REINFORCEMENT, Cowl Side
	55362022AA	1							Right
	55362023AA	1							Left
6									BRACKET, Aperture to Fender
	55255504AB	1			31, 61				Right
	55255505AB	1			31, 61				Left
7	04512871AB	2			31, 61				RETAINER, Door Lock Striker
8	55255814AD	1			31				PANEL, Cab Back
9	55257325AA	1							PANEL, Cab Back
10									REINFORCEMENT, Seat Belt
	55255544AB	2			31				Right
	55255545AB	2			31				Left
11	06101718	6							SCREW AND WASHER, Oval Head, M6x1x25
12	06030441	2			31				PIN, Retainer
13	55056245AA	2							EXHAUSTER, Quarter Panel
14									PANEL, Quarter Inner
	55255524AC	1			31				Right
	55255525AC	1			31				Left
-15									BAFFLE, B Pillar
	55255730	1			31, 61				Right

DAKOTA (AN)

SERIES	LINE	BODY	ENGINE	TRANSMISSION
L = Dakota (All)	1 = Dakota 2WD	61 = Regular Cab (112 WB)	EPE = 2.5L 4 Cylinder	DGK = 4 Speed Automatic 42RE
	5 = Dakota 4WD	31 = Club Cab (131 WB)	EHC = 3.9L 6 Cylinder	DGT = 4 Speed Automatic 46RE
		84 = Quad Cab (131 WB)	EML = 5.0L 8 Cylinder	DDC = 5 Speed HD Manual
			EVA = 4.7L Magnum V8	DDK = 5 Speed HD Manual
			EP0 = All 2.5L	DG4 = Multispeed Automatic 45RFE
			EH0 = All 3.9L	DG0 = All Automatic Transmissions
			EM0 = All 5.9L	DBB = All Manual Transmissions
			EV0 = All 4.7L	

AR = use ase required - = Non illustrrated part

Aperture Panel Bodyside Club Cab
Figure SAN-820

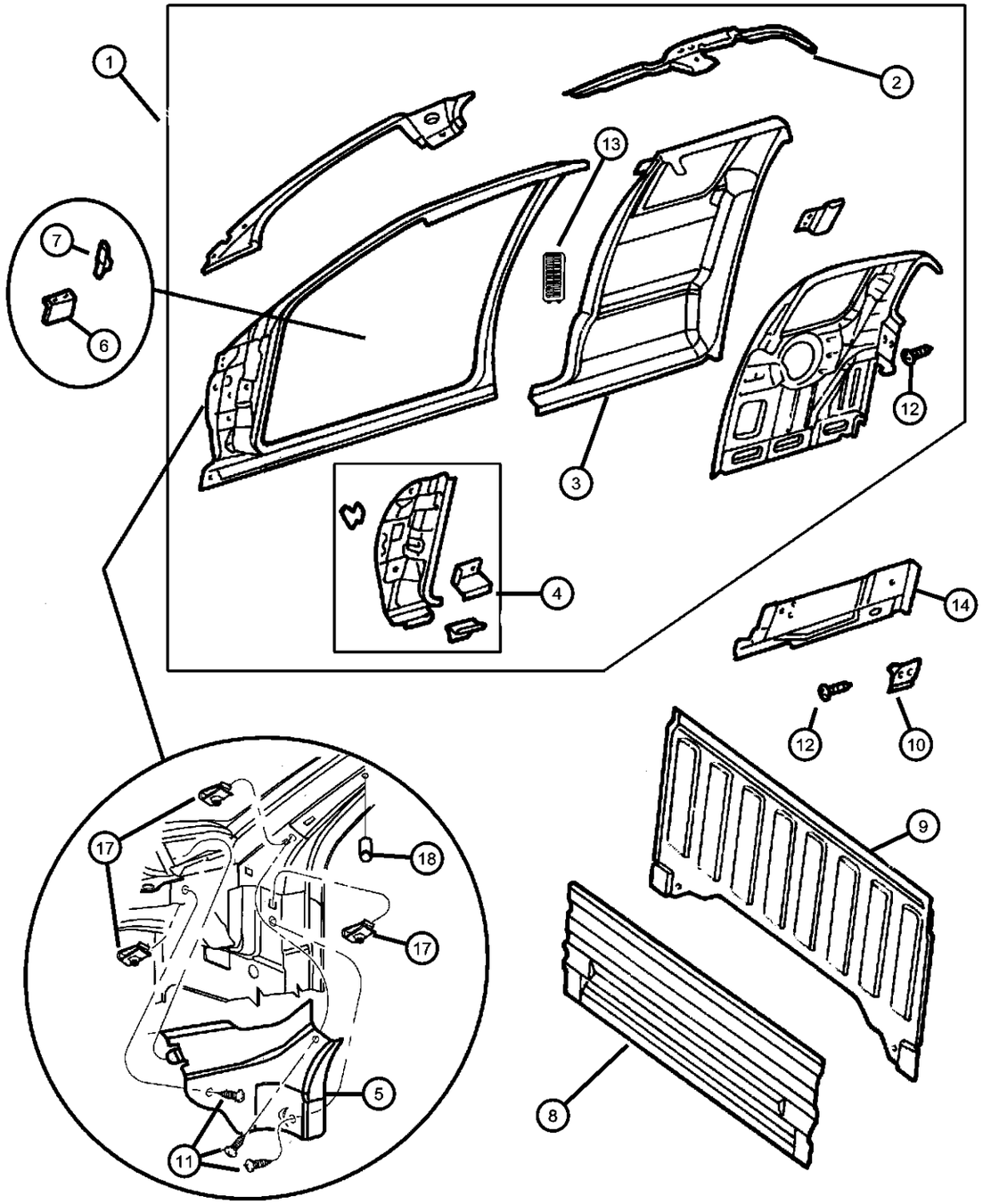

ITEM	PART NUMBER	QTY	LINE	SERIES	BODY	ENGINE	TRANS	TRIM	DESCRIPTION
	55255731	1			31, 61				Left
-16									BAFFLE, Windshield Pillar
	55255724AB	1			31, 61				Right
	55255725AB	1			31, 61				Left
17	06100041	6							U-NUT, .190-16
18	06507161AA	4							NUT

DAKOTA (AN)

SERIES	LINE	BODY	ENGINE	TRANSMISSION
L = Dakota (All)	1 = Dakota 2WD	61 = Regular Cab (112 WB)	EPE = 2.5L 4 Cylinder	DGK = 4 Speed Automatic 42RE
	5 = Dakota 4WD	31 = Club Cab (131 WB)	EHC = 3.9L 6 Cylinder	DGT = 4 Speed Automatic 46RE
		84 = Quad Cab (131 WB)	EML = 5.0L 8 Cylinder	DDC = 5 Speed HD Manual
			EVA = 4.7L Magnum V8	DDK = 5 Speed HD Manual
			EP0 = All 2.5L	DG4 = Multispeed Automatic 45RFE
			EH0 = All 3.9L	DG0 = All Automatic Transmissions
			EM0 = All 5.9L	DBB = All Manual Transmissions
			EV0 = All 4.7L	

AR = use ase required - = Non illustrrated part

<< RETURN TO GROUP INDEX

Aperture Panel Bodyside, 4 Door
Figure SAN-830

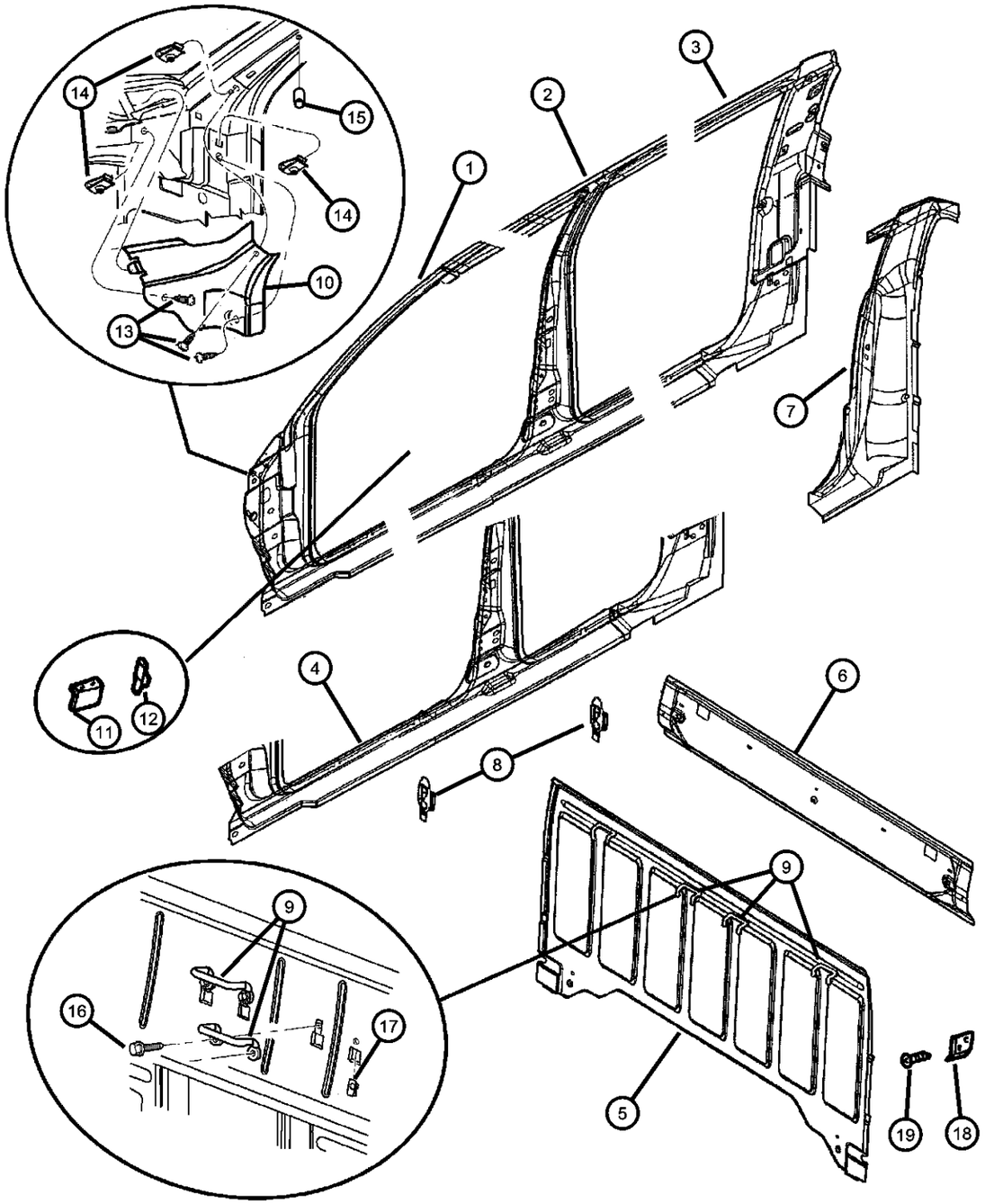

ITEM	PART NUMBER	QTY	LINE	SERIES	BODY	ENGINE	TRANS	TRIM	DESCRIPTION
1									PANEL, Body Side Aperture Front
	05017050AC	1			84				Right
	05017051AC	1			84				Left
2									PANEL, Body Side Aperture Center
	05017052AB	1			84				Right
	05017053AB	1			84				Left
3									PANEL, Body Side Aperture Rear
	05017054AB	1			84				Right
	05017055AB	1			84				Left
4									SILL, Body Side
	05017056AC	1			84				Right
	05017057AC	1			84				Left
5	55257325AA	1							PANEL, Cab Back
6	55257428AA	1			61, 84				REINFORCEMENT, Cab Back
7									PANEL, Quarter Extension
	55257308AA	1			84				Right
	55257309AA	1			84				Left
8	04512871AB	1			84				RETAINER, Door Lock Striker
9	55257382AA	4			84				FOOTMAN LOOP, Hold Down
10									REINFORCEMENT, Cowl Side
	55362022AA	1							Right
	55362023AA	1							Left
11									BRACKET, Aperture to Fender
	55255504AB	1			84				Right
	55255505AB	1			84				Left
12	04512871AB	1			84				RETAINER, Door Lock Striker
13	06101718	6							SCREW AND WASHER, Oval Head, M6x1x25
14	06100041	6							U-NUT, .190-16
15	06507161AA	4			84				NUT
16	06101331	8			84				BOLT, M6x1.00x20
17	06100041	8			84				U-NUT, .190-16
18									REINFORCEMENT, Seat Belt

DAKOTA (AN)

SERIES	LINE	BODY	ENGINE	TRANSMISSION
L = Dakota (All)	1 = Dakota 2WD	61 = Regular Cab (112 WB)	EPE = 2.5L 4 Cylinder	DGK = 4 Speed Automatic 42RE
	5 = Dakota 4WD	31 = Club Cab (131 WB)	EHC = 3.9L 6 Cylinder	DGT = 4 Speed Automatic 46RE
		84 = Quad Cab (131 WB)	EML = 5.0L 8 Cylinder	DDC = 5 Speed HD Manual
			EVA = 4.7L Magnum V8	DDK = 5 Speed HD Manual
			EP0 = All 2.5L	DG4 = Multispeed Automatic 45RFE
			EH0 = All 3.9L	DG0 = All Automatic Transmissions
			EM0 = All 5.9L	DBB = All Manual Transmissions
			EV0 = All 4.7L	

Aperture Panel Bodyside, 4 Door
Figure SAN-830

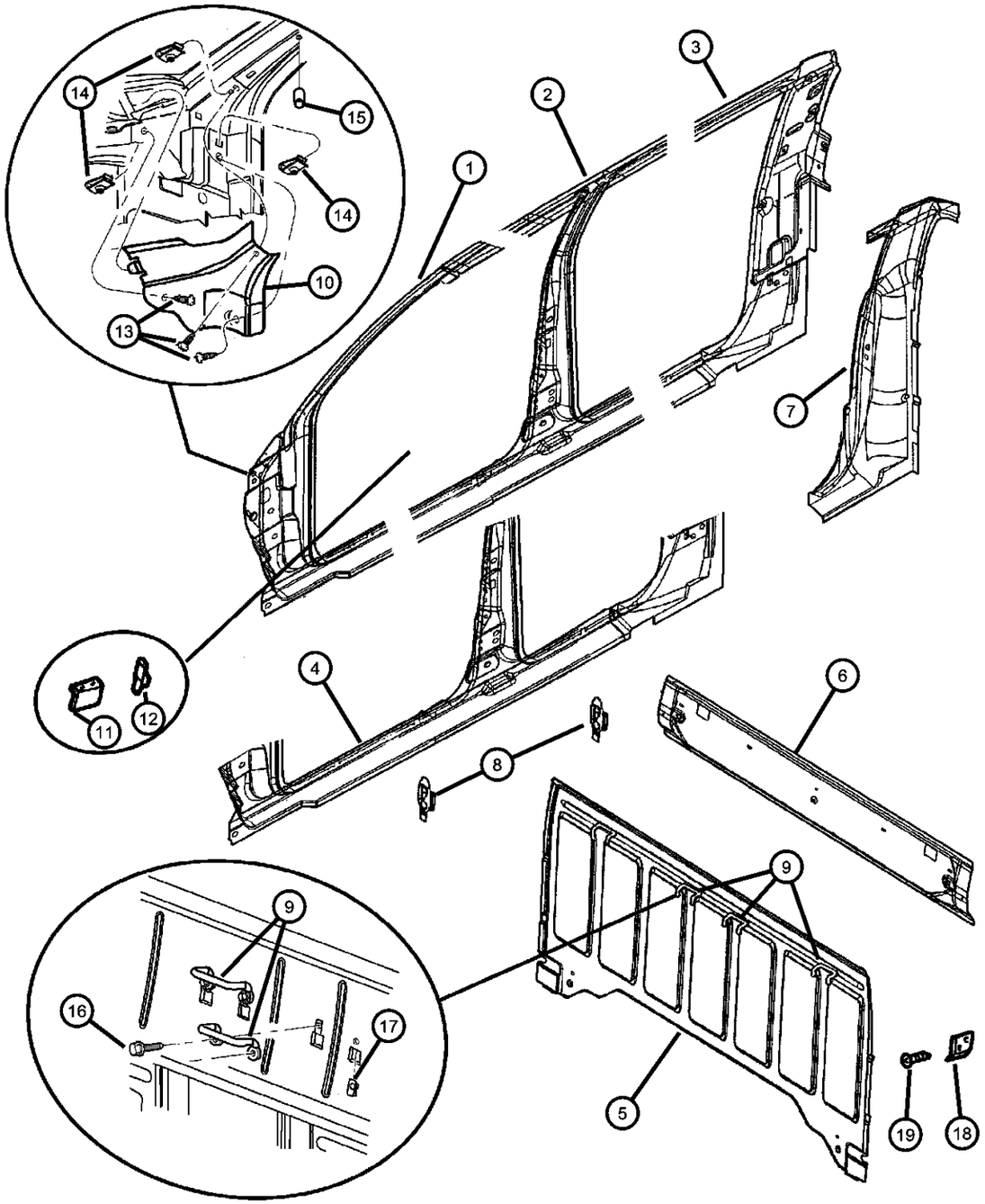

ITEM	PART NUMBER	QTY	LINE	SERIES	BODY	ENGINE	TRANS	TRIM	DESCRIPTION
	55255544AB	1			84				Right
	55255545AB	1			84				Left
19	06030441	1							PIN, Retainer

DAKOTA (AN)

SERIES	LINE	BODY	ENGINE	TRANSMISSION
L = Dakota (All)	1 = Dakota 2WD	61 = Regular Cab (112 WB)	EPE = 2.5L 4 Cylinder	DGK = 4 Speed Automatic 42RE
	5 = Dakota 4WD	31 = Club Cab (131 WB)	EHC = 3.9L 6 Cylinder	DGT = 4 Speed Automatic 46RE
		84 = Quad Cab (131 WB)	EML = 5.0L 8 Cylinder	DDC = 5 Speed HD Manual
			EVA = 4.7L Magnum V8	DDK = 5 Speed HD Manual
			EP0 = All 2.5L	DG4 = Multispeed Automatic 45RFE
			EH0 = All 3.9L	DG0 = All Automatic Transmissions
			EM0 = All 5.9L	DBB = All Manual Transmissions
			EV0 = All 4.7L	

Sweptline Box, Panel Outer Box And Fuel Filler Door
Figure SAN-910

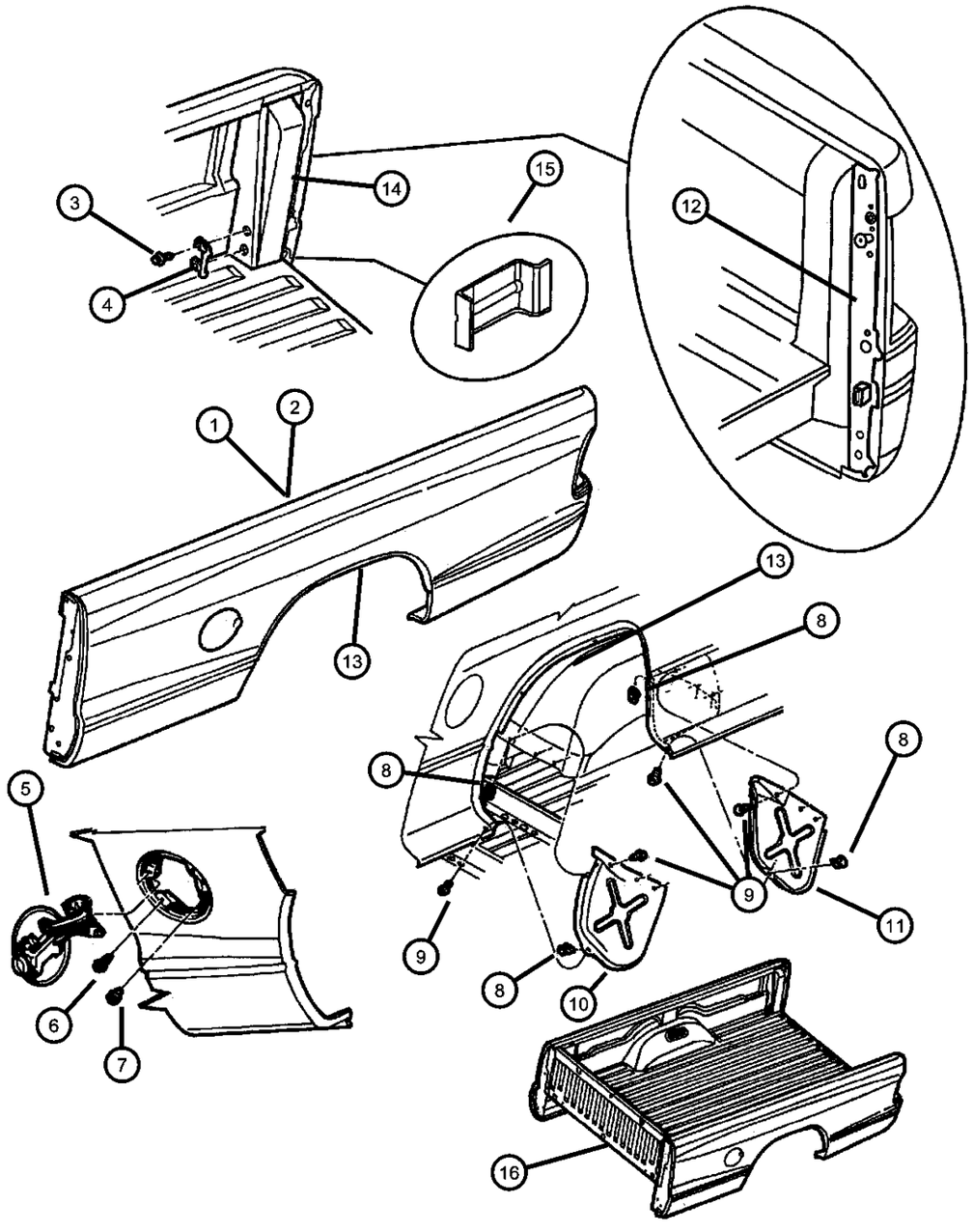

ITEM	PART NUMBER	QTY	LINE	SERIES	BODY	ENGINE	TRANS	TRIM	DESCRIPTION
1									PANEL, Box Side Outer
	55254860	1			31, 61				Right
	55254861	1			31, 61				Left
	55257228AC	1			84				Right
	55257229AC	1			84				Left
2									PANEL, Box Side, Complete
	04883722AA	1			31, 61				Right
	04883723AA	1			31, 61				Left
	55257232AD	1			84				Right
	55257233AD	1			84				Left
3									SCREW AND WASHER, Hex Head, M8x1.25x20
	06102002	4			31, 61				
		8			84				
4									STRIKER, Door Latch
	55362119AA	2			31, 61				
		4			84				
5	55254864AC	1							DOOR, Fuel Fill
6	06503259	2							SCREW, Tapping, M6x1x20
7	55076327	2							BUMPER, Fuel Door
8	06036009AA	12							NUT, U Multi-Thread, .19-24
9	06036009AA	12							SCREW AND WASHER, Hex Head, .19-24x1, (NOT SERVICED)
10									SHIELD, Splash
	55362382AA	1							Rear Wheel Opening, Front Right
	55362383AA	1							Rear Wheel Opening, Front Left
11									SHIELD, Splash
	55362536AA	1							Rear Wheel Opening, Rear Right
	55362537AA	1							Rear Wheel Opening, Rear Left
12									REINFORCEMENT, Box Side
	55257028AB	1			31, 61				Right
		1			84				Right
	55257029AB	1			31, 61				Left

DAKOTA (AN)

SERIES	LINE	BODY	ENGINE	TRANSMISSION
L = Dakota (All)	1 = Dakota 2WD	61 = Regular Cab (112 WB)	EPE = 2.5L 4 Cylinder	DGK = 4 Speed Automatic 42RE
	5 = Dakota 4WD	31 = Club Cab (131 WB)	EHC = 3.9L 6 Cylinder	DGT = 4 Speed Automatic 46RE
		84 = Quad Cab (131 WB)	EML = 5.0L 8 Cylinder	DDC = 5 Speed HD Manual
			EVA = 4.7L Magnum V8	DDK = 5 Speed HD Manual
			EP0 = All 2.5L	DG4 = Multispeed Automatic 45RFE
			EH0 = All 3.9L	DG0 = All Automatic Transmissions
			EM0 = All 5.9L	DBB = All Manual Transmissions
			EV0 = All 4.7L	

Sweptline Box, Panel Outer Box And Fuel Filler Door
Figure SAN-910

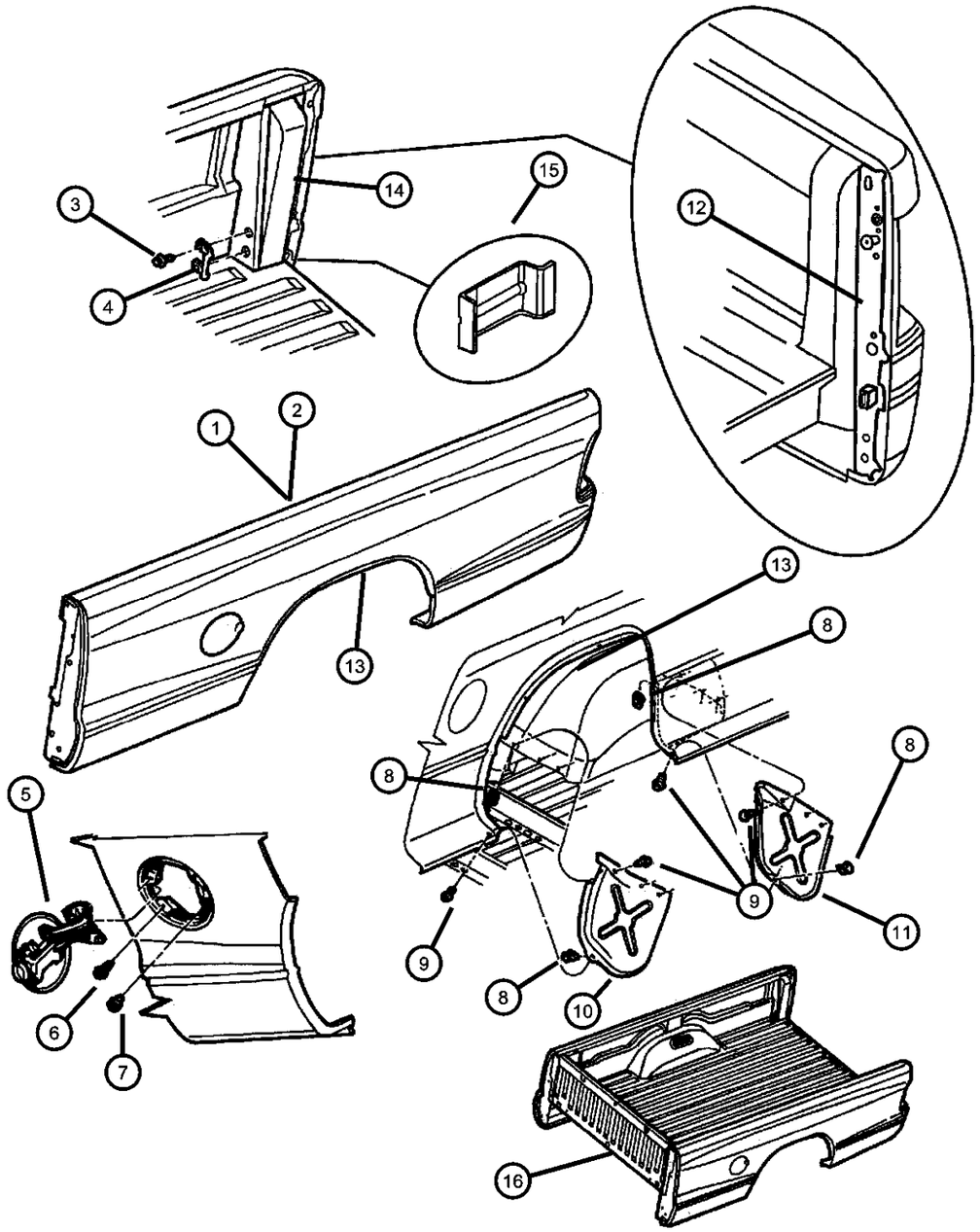

ITEM	PART NUMBER	QTY	LINE	SERIES	BODY	ENGINE	TRANS	TRIM	DESCRIPTION
		1			84				Left
13									WHEELHOUSE, Rear Inner
	55256034	1			84				
		2			31, 61				
14									REINFORCEMENT, Box Side
	55257056AD	1			31, 61				Right
	55257056AE	1			84				Right
	55257057AD	1			31, 61				Left
	55257057AE	1			84				Left
15									REINFORCEMENT, Box Crossmember, Also Serviced in REINFORCEMENT, Box Side
	04335034	1			31, 61				
		1			84				
16									BOX, Pickup
	04897270AB	1			31, 61				
	05080828AA	1			84				
-17									BRACKET, Tail Lamp
	55255070	1			31, 61				Right
	55255071	1			31, 61				Left
-18	55362785AA	2							PLUG, Body, Bedliner, Plastic 4 Inch
-19	06502871	10							RETAINER, Bedliner & Tailgate Liner Attach

DAKOTA (AN)

SERIES	LINE	BODY	ENGINE	TRANSMISSION
L = Dakota (All)	1 = Dakota 2WD	61 = Regular Cab (112 WB)	EPE = 2.5L 4 Cylinder	DGK = 4 Speed Automatic 42RE
	5 = Dakota 4WD	31 = Club Cab (131 WB)	EHC = 3.9L 6 Cylinder	DGT = 4 Speed Automatic 46RE
		84 = Quad Cab (131 WB)	EML = 5.0L 8 Cylinder	DDC = 5 Speed HD Manual
			EVA = 4.7L Magnum V8	DDK = 5 Speed HD Manual
			EP0 = All 2.5L	DG4 = Multispeed Automatic 45RFE
			EH0 = All 3.9L	DG0 = All Automatic Transmissions
			EM0 = All 5.9L	DBB = All Manual Transmissions
			EV0 = All 4.7L	

Roof Panels
Figure SAN-1110

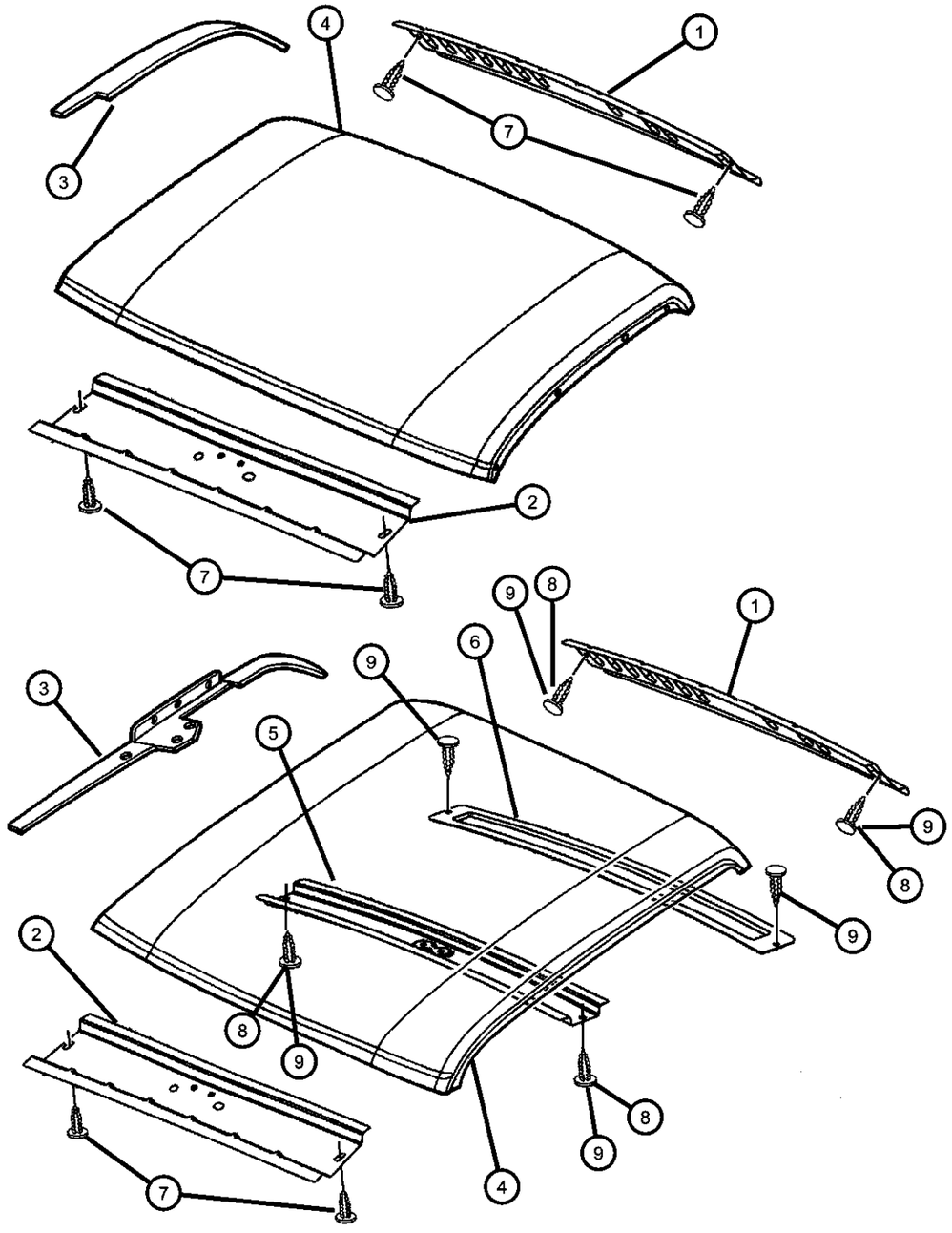

ITEM	PART NUMBER	QTY	LINE	SERIES	BODY	ENGINE	TRANS	TRIM	DESCRIPTION
1									HEADER, Roof Rear
	55255510AB	1			31, 61				
	55257147AB	1			84				
2	55255503AB	1							HEADER, Roof Front
3									RAIL, Roof
	55255538AB	1			61				Right
	55255539AB	1			61				Left
	55255541AC	1			31				Right
	55257166AB	1			84				Right
	55257167AB	1			84				Left
	55257472AA	1			31				Left
4									PANEL, Roof
	55255529	1			61				
	55255532	1			31				
	55257169AA	1			84				
5	55255502	1			31, 84				BOW, Roof, Extension
6	55257280AA	1			84				BOW, Roof
7	06030441	2							PIN, Retainer
8	06030441	2			31				PIN, Retainer
9	06503943	2			84				RETAINER

DAKOTA (AN)

SERIES	LINE	BODY	ENGINE	TRANSMISSION
L = Dakota (All)	1 = Dakota 2WD	61 = Regular Cab (112 WB)	EPE = 2.5L 4 Cylinder	DGK = 4 Speed Automatic 42RE
	5 = Dakota 4WD	31 = Club Cab (131 WB)	EHC = 3.9L 6 Cylinder	DGT = 4 Speed Automatic 46RE
		84 = Quad Cab (131 WB)	EML = 5.0L 8 Cylinder	DDC = 5 Speed HD Manual
			EVA = 4.7L Magnum V8	DDK = 5 Speed HD Manual
			EP0 = All 2.5L	DG4 = Multispeed Automatic 45RFE
			EH0 = All 3.9L	DG0 = All Automatic Transmissions
			EM0 = All 5.9L	DBB = All Manual Transmissions
			EV0 = All 4.7L	

Tailgate
Figure SAN-1310

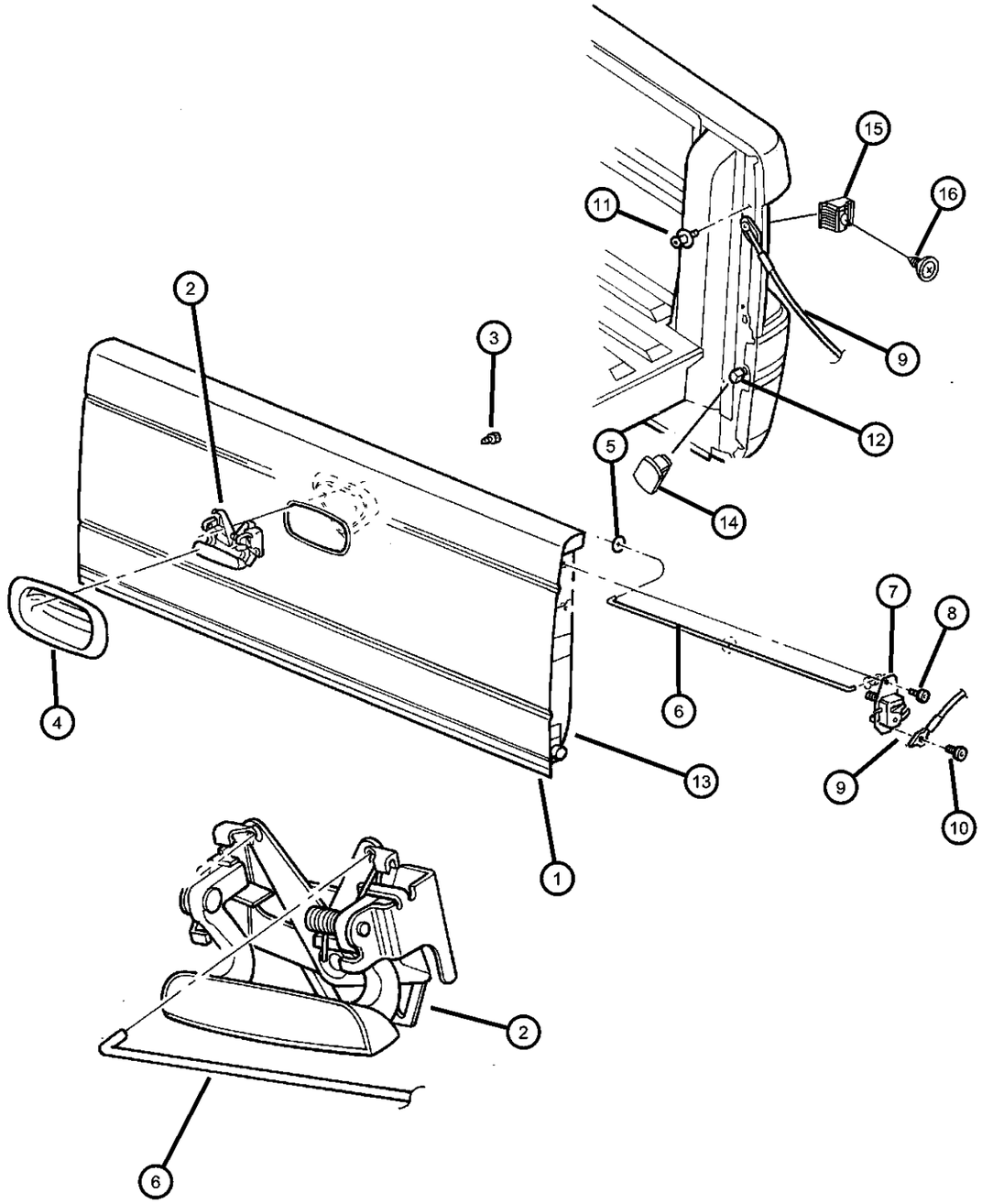

ITEM	PART NUMBER	QTY	LINE	SERIES	BODY	ENGINE	TRANS	TRIM	DESCRIPTION
1	55257014AD	1							TAILGATE
2	55256215AB	1							HANDLE, Tailgate
3	06503734	3							SCREW AND WASHER
4	55256216AB	1							BEZEL, Tailgate Handle
5	55034246	2							SILENCER, Anti-Rattle Disc
6	55255700AC	2							ROD, Tailgate Handle to Latch
7									LATCH, Tailgate
	55275484AA	1							Right
	55275485AA	1							Left
8	06036019AA	2							SCREW
9									CABLE, Tailgate
	55174826AB	1							Right
	55174827AB	1							Left
10	06036018AA	2							BOLT, Shoulder
11	06036409AA	2							SCREW AND WASHER, Shoulder, .375-16x1.575
12	55362794AA	2							BUSHING, Tailgate Pivot
13									BRACKET, Tailgate Pivot
	55257016	1							Right
	55257017	1							Left
14	55257096AA	2							BUMPER, Rubber
15	55257415AA	2							BUMPER, Rubber
16	55257415AA	2							SCREW, .190-16x.500, (NOT SERVICED)

DAKOTA (AN)

SERIES	LINE	BODY	ENGINE	TRANSMISSION
L = Dakota (All)	1 = Dakota 2WD	61 = Regular Cab (112 WB)	EPE = 2.5L 4 Cylinder	DGK = 4 Speed Automatic 42RE
	5 = Dakota 4WD	31 = Club Cab (131 WB)	EHC = 3.9L 6 Cylinder	DGT = 4 Speed Automatic 46RE
		84 = Quad Cab (131 WB)	EML = 5.0L 8 Cylinder	DDC = 5 Speed HD Manual
			EVA = 4.7L Magnum V8	DDK = 5 Speed HD Manual
			EP0 = All 2.5L	DG4 = Multispeed Automatic 45RFE
			EH0 = All 3.9L	DG0 = All Automatic Transmissions
			EM0 = All 5.9L	DBB = All Manual Transmissions
			EV0 = All 4.7L	

Tonneau Cover
Figure SAN-1710

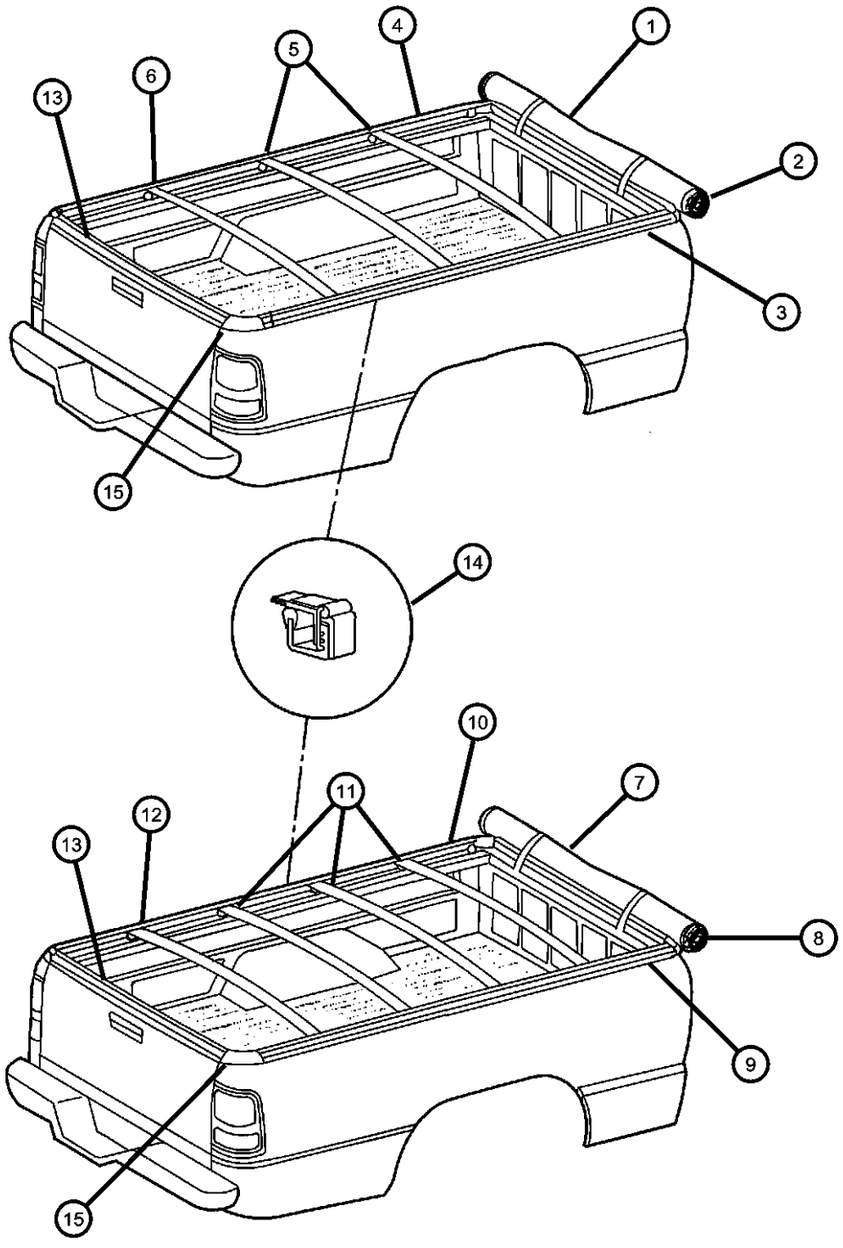

ITEM	PART NUMBER	QTY	LINE	SERIES	BODY	ENGINE	TRANS	TRIM	DESCRIPTION
1	55364091AA	1			84				COVER ASSY, Tonneau, Includes Cover Front Rail and Rear Retainers
2	05086900AA	1			84				COVER, Tonneau, Cover Only
3	55364012AA	1			84				RAIL, Tonneau CoverRight
4	55364013AA	1			84				RAIL, Tonneau CoverLeft
5	55364015AA	2			84				BOW, Tonneau Cover
6	55364092AA	1			84				BOW, Tonneau Cover
7	55364095AA	1			31, 61				COVER ASSY, Tonneau, Includes Cover Front Rail and Rear Retainers
8	05086901AA	1			31, 61				COVER, Tonneau, Cover Only
9	55364008AA	1			31, 61				RAIL, Tonneau CoverRight
10	55364009AA	1			31, 61				RAIL, Tonneau CoverLeft
11	55364015AA	3			31, 61				BOW, Tonneau Cover
12	55364092AA	1			31, 61				BOW, Tonneau Cover
13									RAIL ASSY, Tonneau w/frame
	05086898AA	1			31, 61				
		1			84				
14									CLAMP, Tonneau
	55364093AA	6			31, 61				
		4			84				
15									RETAINER, Tonneau Cover Hook
	05086899AA	1			31, 61				
		1			84				

DAKOTA (AN)

SERIES	LINE	BODY	ENGINE	TRANSMISSION
L = Dakota (All)	1 = Dakota 2WD	61 = Regular Cab (112 WB)	EPE = 2.5L 4 Cylinder	DGK = 4 Speed Automatic 42RE
	5 = Dakota 4WD	31 = Club Cab (131 WB)	EHC = 3.9L 6 Cylinder	DGT = 4 Speed Automatic 46RE
		84 = Quad Cab (131 WB)	EML = 5.0L 8 Cylinder	DDC = 5 Speed HD Manual
			EVA = 4.7L Magnum V8	DDK = 5 Speed HD Manual
			EP0 = All 2.5L	DG4 = Multispeed Automatic 45RFE
			EH0 = All 3.9L	DG0 = All Automatic Transmissions
			EM0 = All 5.9L	DBB = All Manual Transmissions
			EV0 = All 4.7L	