VIN PLATE DECODING INFORMATION

1	2	3	4	5	6	7	8	9	10	11	12 thru 17
Country	**Make**	**Vehicle Type**	**GVWR & Pass. Safety**	**Line**	**Series**	**Body Style**	**Engine**	**Check Digit**	**Model Year**	**Assy. Plant**	**Sequence No.**

The following table interprets the VIN Plate position shown above.

Position	Interpretation	Codes = Description
1	Country of Origin	1 = U.S.
2	Assembler	B = Dodge
3	Vehicle Type	7 = Truck
4	GVWR & Pass. Safety	D = 0-3000 lbs (0-1360 kg) E = 3001-4000 lbs (1361-1814 kg) F = 4001-5000 lbs (1815-2267 kg) G = 5001-6000 lbs (2268-2721 kg) H = 6001-7000 lbs (2722-3175 kg) J = 7001-8000 lbs (3176-3628 kg) K = 8001-9000 lbs (3629-4082 kg) L = 9001-10000 lbs (4083-4535 kg) M = 10001-14000 lbs (4536-6350 kg) W = Buses & Incomplete Vehicles With Hydraulic Brakes
5	Vehicle Line	G = Dakota, Dakota/Sport, Dakota 4x4 L = Dakota, Dakota/Sport, Dakota 4x2
6	Series	2 = Dakota/Sport/SLT
7	Body Style	2 = Club Cab (2 Door) 3 = Club Cab (4WD) 6 = Regular Cab (2WD)
8	Engine	N = 4.7L 8 Cyl Gasoline (MPI) (EVA) P = 2.5L 4 Cyl. (EPE) X = 3.9L 6 Cyl. (EHC) Y = 5.2L 8 Cyl. (ELF) Z = 5.9L 8 Cyl. (EML)
9	Check Digit	0 = Check Digit 0 = Check Digit 0 = Check Digit 0 = Check Digit
10	Model Year	Y = 2000
11	Assembly Plant	S = Dodge City
12 thru 17	Vehicle Build Sequence	Model Year Assembly Sequence

Group - 1

Component Parts for Mopar Accessories

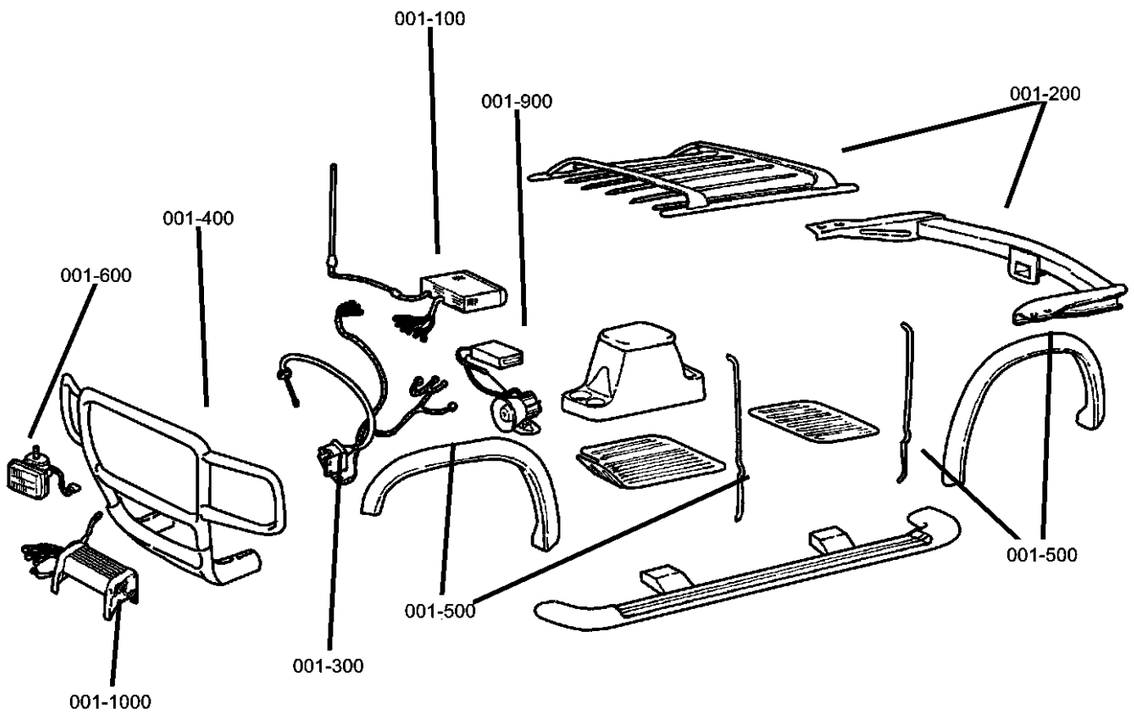

001-100 Audio & Electronics 	**001-1000** 4 - Wheeling & Off Road 	**001-200** Carriers & Cargo Hauling 	**001-300** Driving Convenience
001-400 Exterior Appearance 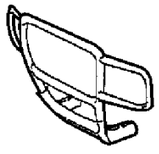	**001-500** Exterior Protection 	**001-600** Fog Lights & Electrical 	**001-900** Security

Group - 1 Component Parts for Mopar Accessories

Illustration Title — Group-Fig. No.

Audio & Electronics
Player Kit - CD Changer - 6 Disc. .... Fig. 1 - 110
Install Kit - CD Changer - Trunk .... Fig. 1 - 130

Carriers & Cargo Hauling
Bike Carrier - Fork Mount .... Fig. 1 - 210
Ski Carrier - Two Pair .... Fig. 1 - 220
Receiver Kit - Trailer Tow .... Fig. 1 - 230
Wiring Kit - Trailer Tow - 7 Way .... Fig. 1 - 240
Cooler Kit - Transmission Oil .... Fig. 1 - 250
Cover Kit - Tonneau .... Fig. 1 - 260
Cover Kit - Folding .... Fig. 1 - 270
Cover Kit - Tonneau .... Fig. 1 - 280

Driving Convenience
Speed Control Kit .... Fig. 1 - 310
Mounting Kit - Cellular Phone .... Fig. 1 - 320

Exterior Appearance
Wheel Lip Mouldings .... Fig. 1 - 410
Grille and Brush Guards .... Fig. 1 - 420
Running Board .... Fig. 1 - 430
Side Steps, Molded and Tubular .... Fig. 1 - 440

Exterior Protection
Bedliner, Trays and Mats .... Fig. 1 - 510
Divider Kit - Cargo .... Fig. 1 - 520
Shield Kit - Air Front .... Fig. 1 - 530

Fog Lights & Electrical
Heater Kit - Engine Block .... Fig. 1 - 610
Light Kit - Off Road .... Fig. 1 - 620
Light Kit - Fog .... Fig. 1 - 630
Install Package - Off Road .... Fig. 1 - 632
Install Package - Fog .... Fig. 1 - 634

Security
Alarm, EVS II Security Plus .... Fig. 1 - 910

4 - Wheeling & Off Road
Winch Kit - Power .... Fig. 1 - 1010

Player Kit - CD Changer - 6 Disc
Figure 1-110

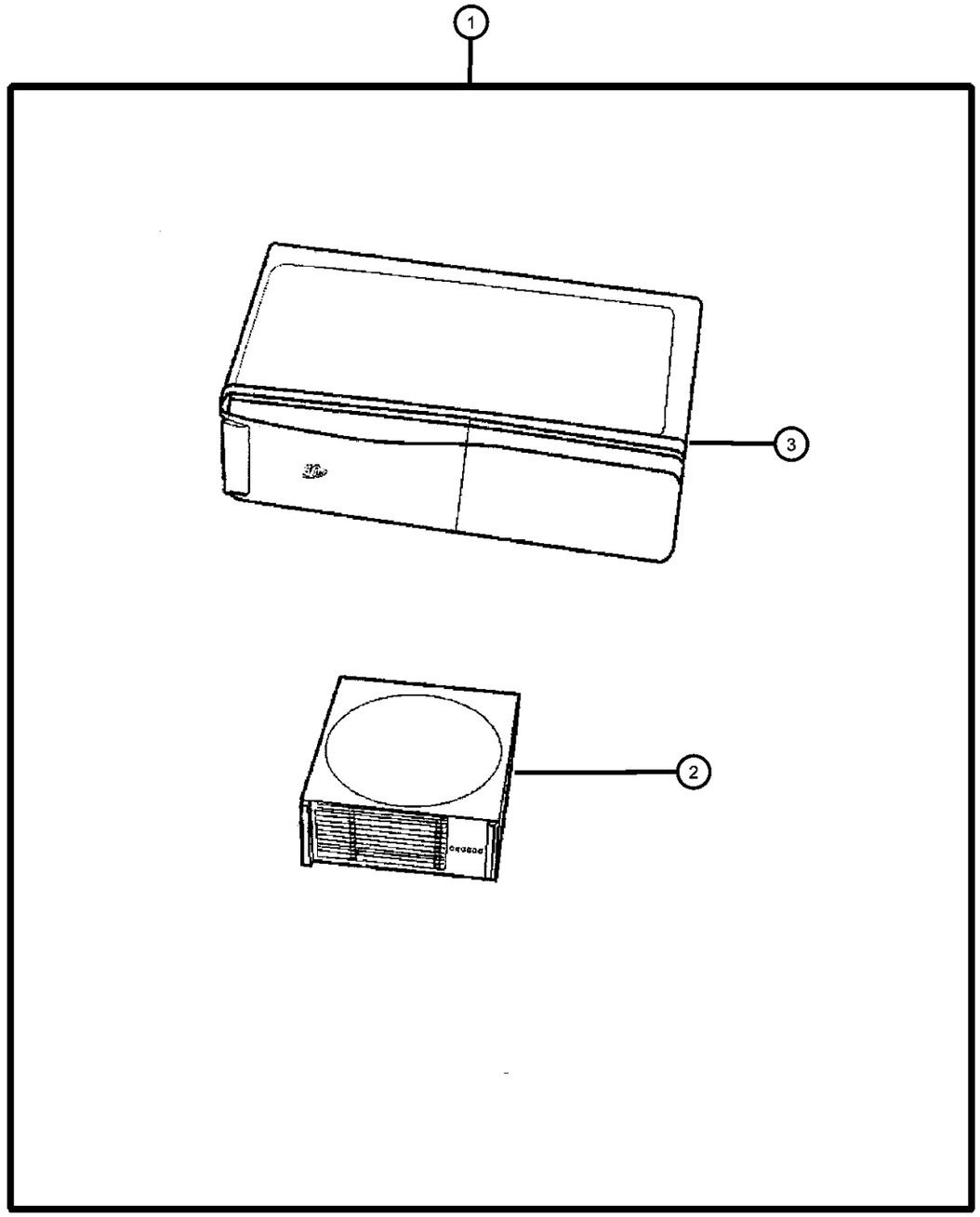

ITEM	PART NUMBER	QTY	LINE	SERIES	BODY	ENGINE	TRANS	TRIM	DESCRIPTION
1	82202700	1							PLAYER KIT, CD Changer - 6 Disc
2	04797433	1							MAGAZINE, CD Changer
3	04797433	1							CHANGER, CD, Serviced in Kit, (NOT SERVICED)

DAKOTA (AN)

SERIES	LINE	BODY	ENGINE	TRANSMISSION
L = Quad Cab L = Regular Cab L = Club Cab	1 = Dakota 2WD 5 = Dakota 4WD	31 = CLUB CAB 2-DR 6.5 FT BOX 61 = REG CAB 6.5 FT BOX 84 = CREW CAB 4-DR W.B.1	EPO = 2.5L 4 Cyl. EHO = 3.9L 6 Cyl. EMO = 5.9L 8 Cyl. EVO = 4.7L Magnum EHC = 3.9L SMPI V6 EML = 5.9L V8 MPI Engine EPE = 2.5L POWER TECH I-4 Cyl. EVA = 4.7L V8 MPI	DDC = TRANSMISSION - 5-SPEED HD MANUAL DG4 = TRANSMISSION-MULTI-SPEED AUTO, 45RFE DGK = TRANSMISSION - 4-SPD. AUTOMATIC,42RE DGT = TRANSMISSION - 4-SPD. AUTOMATIC,46RE DGO = AUTO. TRANS.

Install Kit - CD Changer - Trunk
Figure 1-130

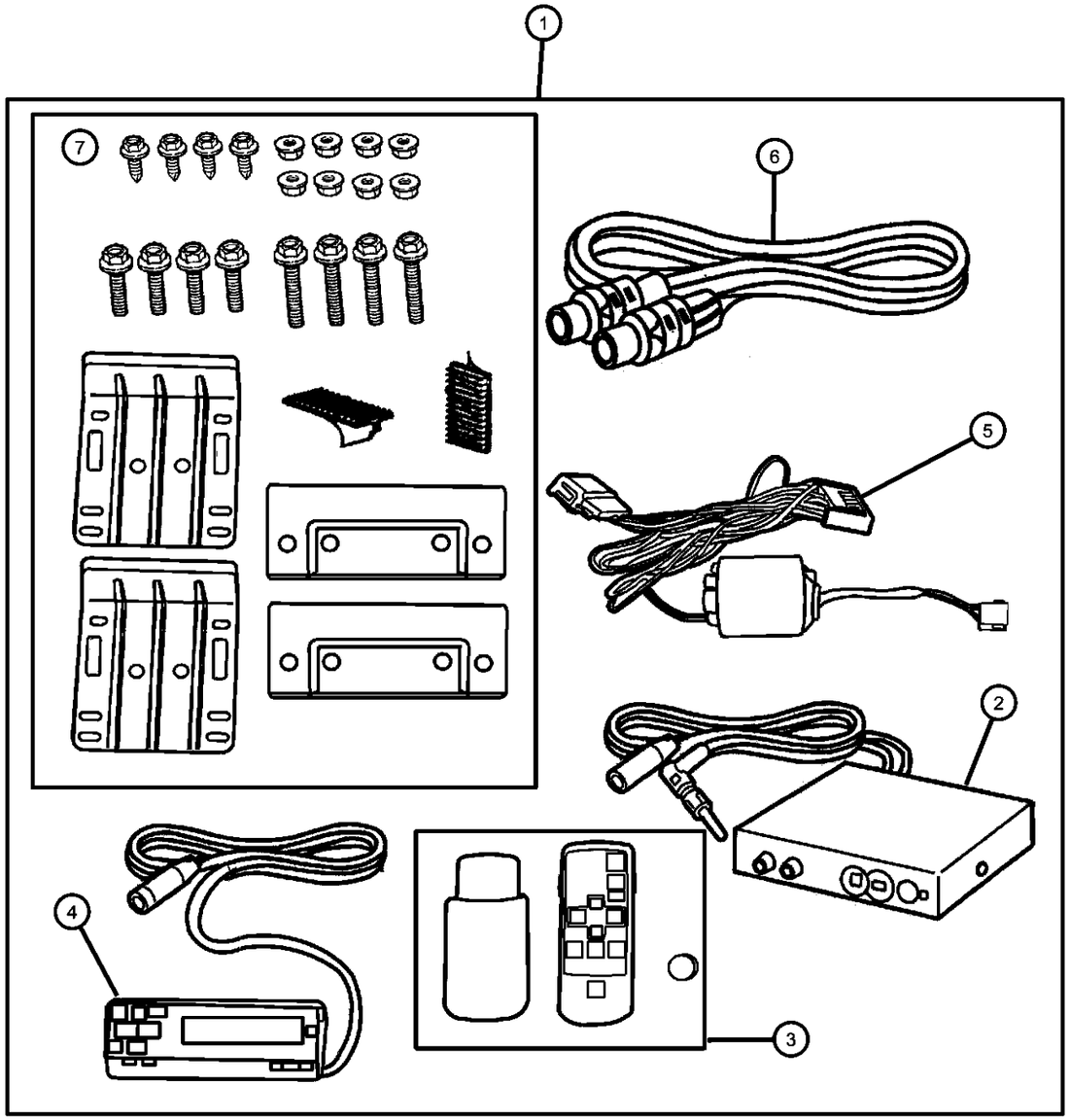

ITEM	PART NUMBER	QTY	LINE	SERIES	BODY	ENGINE	TRANS	TRIM	DESCRIPTION
1	82202292	1							INSTALL KIT, CD Changer - Trunk
2	82202292	1							MODULATOR, FM Changer, Serviced in package, (NOT SERVICED)
3	05017217AA	1							CONTROLLER, CD Wireless
4	05017217AA	1							CONTROLLER, CD Wired, Serviced in package, (NOT SERVICED)
5	04465117	1							ADAPTOR, A/C
6	04465113	1							CABLE, Din
7	04465113	1							HARDWARE KIT, Mounting, Serviced in package, (NOT SERVICED)

DAKOTA (AN)

SERIES	LINE	BODY	ENGINE	TRANSMISSION
L = Quad Cab L = Regular Cab L = Club Cab	1 = Dakota 2WD 5 = Dakota 4WD	31 = CLUB CAB 2-DR 6.5 FT BOX 61 = REG CAB 6.5 FT BOX 84 = CREW CAB 4-DR W.B.1	EPO = 2.5L 4 Cyl. EHO = 3.9L 6 Cyl. EMO = 5.9L 8 Cyl. EVO = 4.7L Magnum EHC = 3.9L SMPI V6 EML = 5.9L V8 MPI Engine EPE = 2.5L POWER TECH I-4 Cyl. EVA = 4.7L V8 MPI	DDC = TRANSMISSION - 5-SPEED HD MANUAL DG4 = TRANSMISSION-MULTI-SPEED AUTO, 45RFE DGK = TRANSMISSION - 4-SPD. AUTOMATIC,42RE DGT = TRANSMISSION - 4-SPD. AUTOMATIC,46RE DGO = AUTO. TRANS.

Bike Carrier - Fork Mount
Figure 1-210

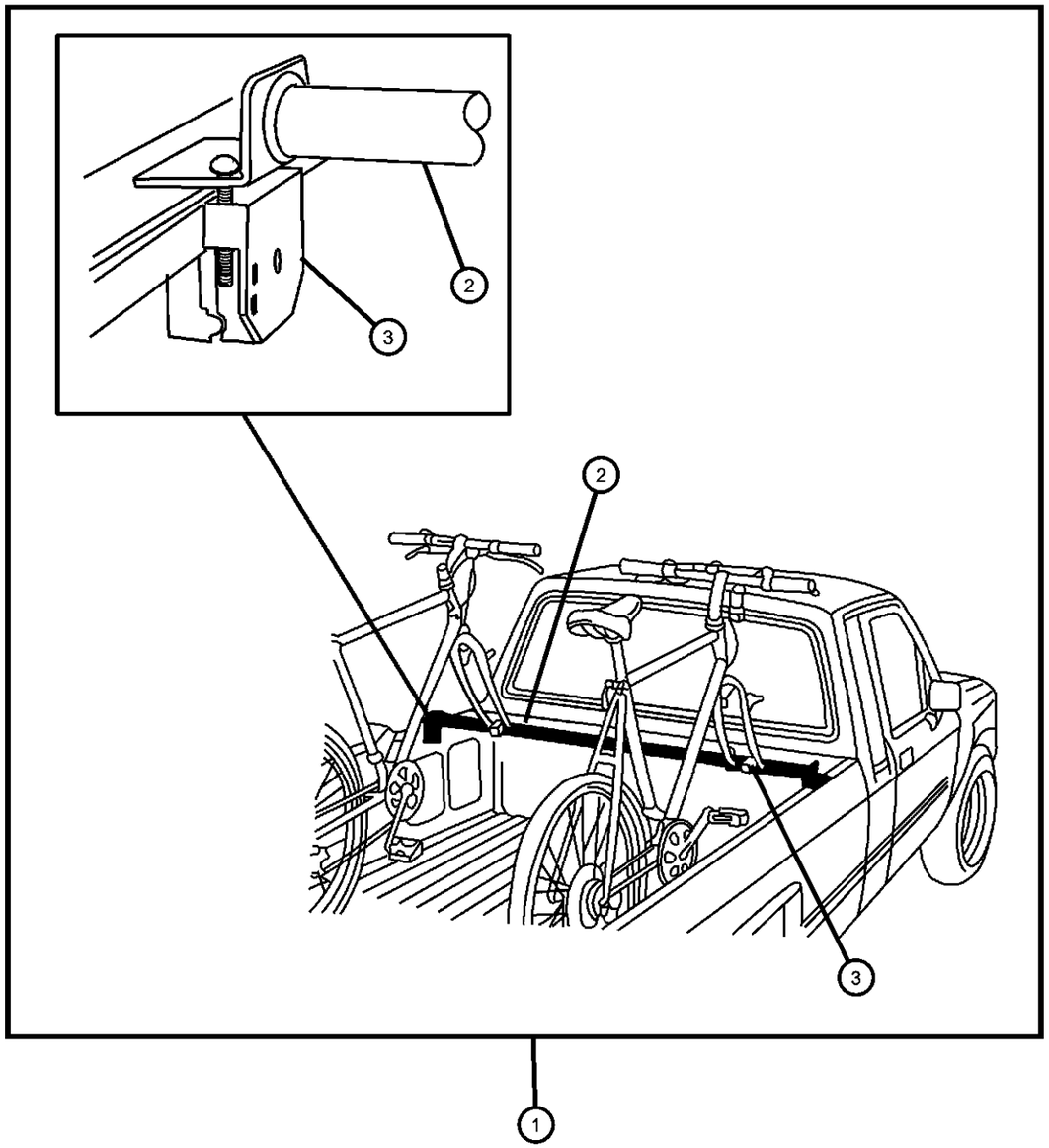

ITEM	PART NUMBER	QTY	LINE	SERIES	BODY	ENGINE	TRANS	TRIM	DESCRIPTION
1	82203189	1	1, 5		31, 61, 84				CARRIER KIT, Bike
2	05018178AA	1	1, 5		31, 61, 84				HARDWARE KIT, Bike Carrier, Telescoping Bar
3	05018184AA	1	1, 5		31, 61, 84				HARDWARE KIT, Bike Carrier, Rail Clamps and Fork Mounts
-4	82203193	1	1, 5		31, 61, 84				ADAPTER KIT, Bike, 4 Bike Conversion
-5	82203191	1	1, 5		31, 61, 84				CARRIER KIT, Bike Wheel
-6	82203192	1	1, 5		31, 61, 84				LOCK KIT, Carrier

DAKOTA (AN)

SERIES	LINE	BODY	ENGINE	TRANSMISSION
L = Quad Cab L = Regular Cab L = Club Cab	1 = Dakota 2WD 5 = Dakota 4WD	31 = CLUB CAB 2-DR 6.5 FT BOX 61 = REG CAB 6.5 FT BOX 84 = CREW CAB 4-DR W.B.1	EPO = 2.5L 4 Cyl. EHO = 3.9L 6 Cyl. EMO = 5.9L 8 Cyl. EVO = 4.7L Magnum EHC = 3.9L SMPI V6 EML = 5.9L V8 MPI Engine EPE = 2.5L POWER TECH I-4 Cyl. EVA = 4.7L V8 MPI	DDC = TRANSMISSION - 5-SPEED HD MANUAL DG4 = TRANSMISSION-MULTI-SPEED AUTO, 45RFE DGK = TRANSMISSION - 4-SPD. AUTOMATIC,42RE DGT = TRANSMISSION - 4-SPD. AUTOMATIC,46RE DGO = AUTO. TRANS.

Ski Carrier - Two Pair
Figure 1-220

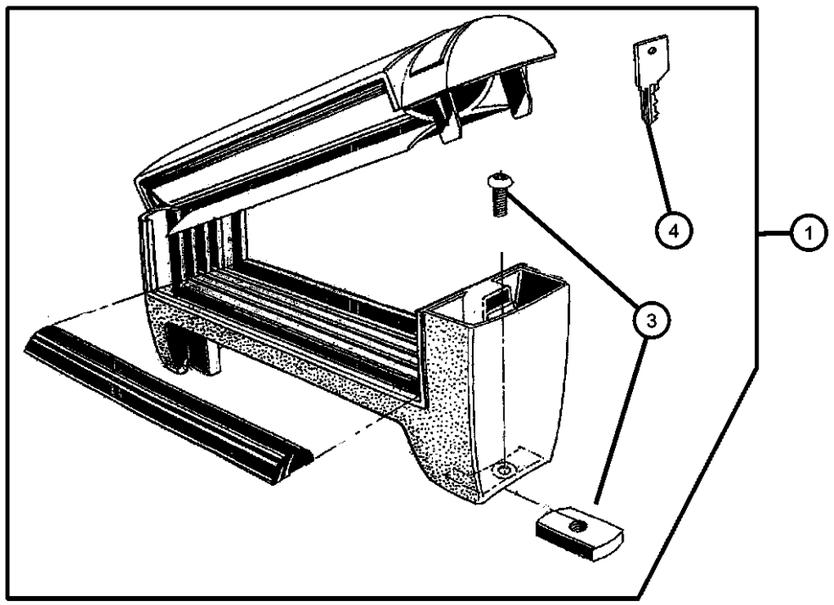

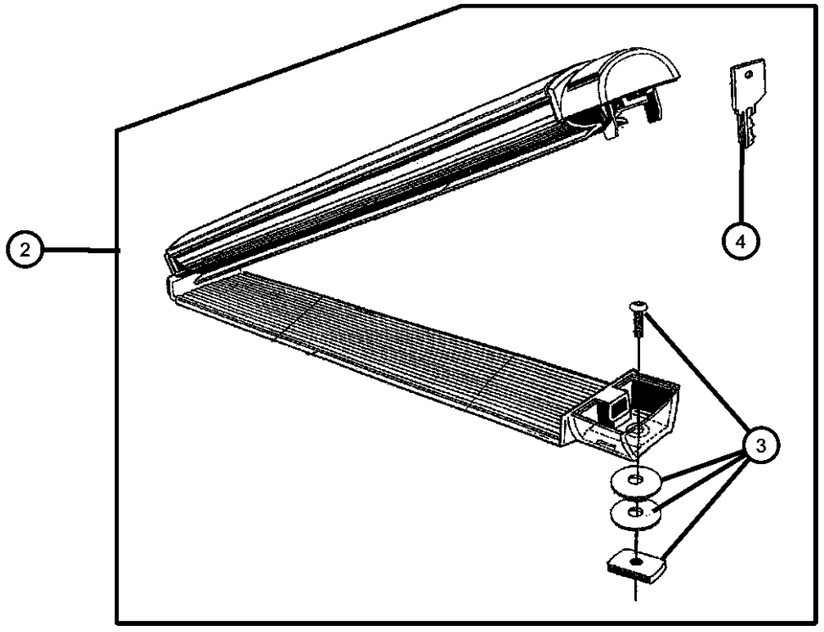

ITEM	PART NUMBER	QTY	LINE	SERIES	BODY	ENGINE	TRANS	TRIM	DESCRIPTION
NOTE: New keys are Vendor Ship Direct.									
1	82203474	1	1, 5		84				CARRIER KIT, Ski - 2 Pair, High Mount
2	82203472	1	1, 5		84				CARRIER KIT, Ski
3									HARDWARE KIT, Mounting
	05018389AA	1	1, 5		84				High Mount
	05019077AA	1	1, 5		84				
4	05019077AA	1							KEY, Master, (NOT SERVICED)

DAKOTA (AN)

SERIES	LINE	BODY	ENGINE	TRANSMISSION
L = Quad Cab L = Regular Cab L = Club Cab	1 = Dakota 2WD 5 = Dakota 4WD	31 = CLUB CAB 2-DR 6.5 FT BOX 61 = REG CAB 6.5 FT BOX 84 = CREW CAB 4-DR W.B.1	EPO = 2.5L 4 Cyl. EHO = 3.9L 6 Cyl. EMO = 5.9L 8 Cyl. EVO = 4.7L Magnum EHC = 3.9L SMPI V6 EML = 5.9L V8 MPI Engine EPE = 2.5L POWER TECH I-4 Cyl. EVA = 4.7L V8 MPI	DDC = TRANSMISSION - 5-SPEED HD MANUAL DG4 = TRANSMISSION-MULTI-SPEED AUTO, 45RFE DGK = TRANSMISSION - 4-SPD. AUTOMATIC,42RE DGT = TRANSMISSION - 4-SPD. AUTOMATIC,46RE DGO = AUTO. TRANS.

Receiver Kit - Trailer Tow
Figure 1-230

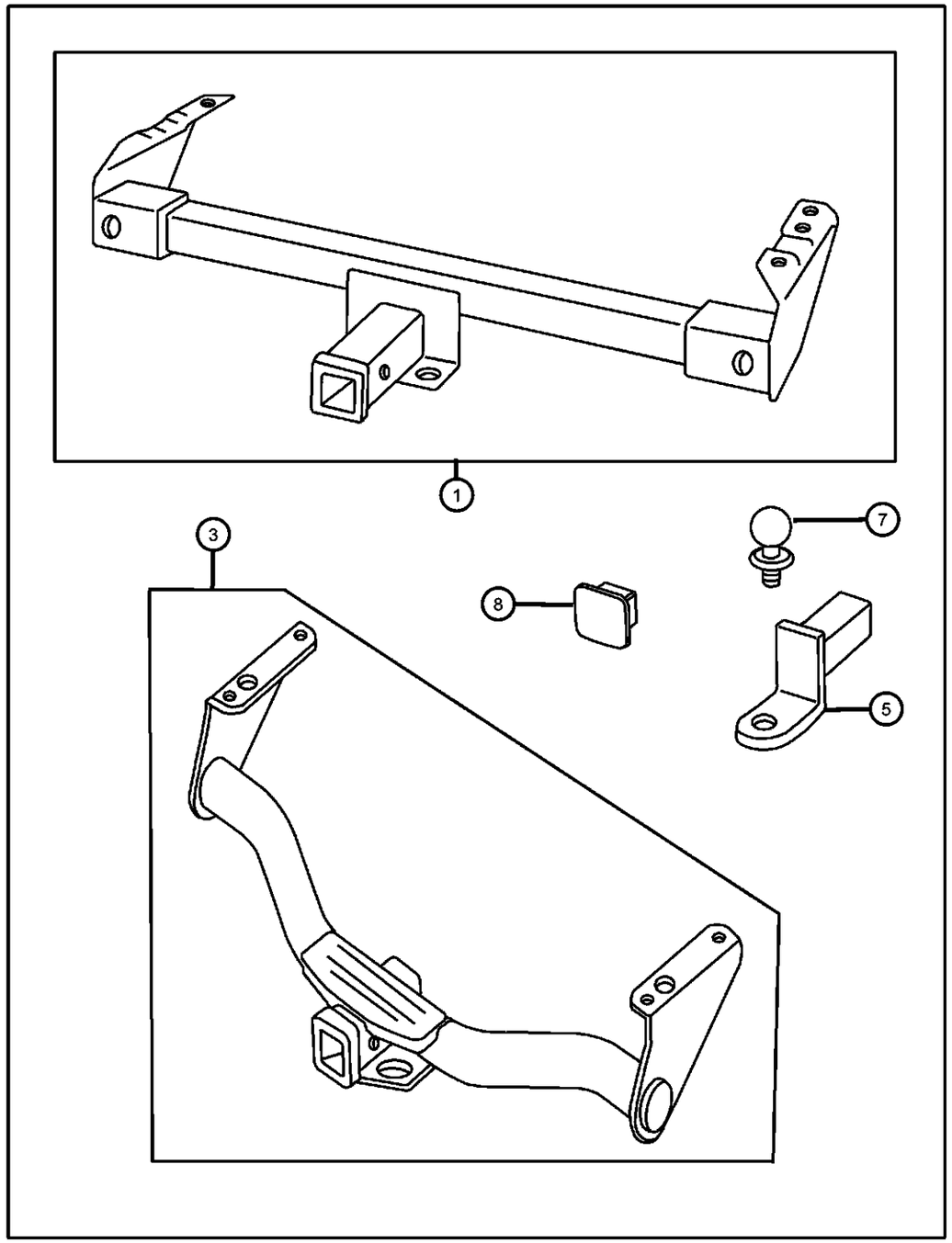

ITEM	PART NUMBER	QTY	LINE	SERIES	BODY	ENGINE	TRANS	TRIM	DESCRIPTION
1	82204712	1	1, 5		31, 61, 84				RECEIVER KIT, Trailer Tow, w/Standard Bumper, Standard Bumper
-2	05018009AA	1	1, 5		31, 61, 84				HARDWARE KIT, Hitch, Used w/82204712
3	82204713	1	1, 5		31, 61, 84				RECEIVER KIT, Trailer Tow, w/Rear Valance Panel
-4	05017945AA	1	1, 5		31, 61, 84				HARDWARE KIT, Hitch
5									ADAPTER KIT, Ball Mount
	82200248	1	1, 5		31, 61, 84				3.5‘ Rise and 2.75‘ Drop for.75‘ Shank Ball
	82201148	1	1, 5		31, 61, 84				1.75‘ Rise and 1.0‘ Drop for 1.0‘ Shank Ball
	82201149	1	1, 5		31, 61, 84				3.0‘ Rise and 2.25‘ Drop for 1.0‘ Shank Ball
-6	05016666AA	1	1, 5		31, 61, 84				PIN, Hitch
7									BALL KIT, Trailer Tow
	82401102	1	1, 5		31, 61, 84				Chrome, 1 7/8‘ Ball, 1.0‘ x 2.5‘ Shank, w/Wrench Flats
	82401103	1	1, 5		31, 61, 84				Chrome, 2.0‘ Ball, 1.0‘ x 2.125‘ Shank, w/Wrench Flats
	82401104	1	1, 5		31, 61, 84				Chrome, 1 7/8‘ Ball, .75‘ x 1.75‘ Shank, w/Wrench Flats
	82401197	1	1, 5		31, 61, 84				Chrome, 1 7/8‘ Ball, .75‘ x 2.312‘ Shank, w/Wrench Flats
	82401218	1	1, 5		31, 61, 84				Chrome, 2.312‘ Ball, 1.0‘ x 2.125‘ Shank, w/Wrench Flats
8									COVER KIT, Trailer Tow
	82203601	1	1, 5		31, 61, 84				w/Ram Logo
	82203602	1	1, 5		31, 61, 84				w/Mpoar Logo
-9	82401217	1	1, 5		31, 61, 84				ADAPTER KIT, Trailer Tow, 7 Way to 6 Way
-10	56019823	1	1, 5		31, 61, 84				ADAPTER, Trailer Tow, 7 Way to 4 Way

DAKOTA (AN)

SERIES	LINE	BODY	ENGINE	TRANSMISSION
L = Quad Cab L = Regular Cab L = Club Cab	1 = Dakota 2WD 5 = Dakota 4WD	31 = CLUB CAB 2-DR 6.5 FT BOX 61 = REG CAB 6.5 FT BOX 84 = CREW CAB 4-DR W.B.1	EPO = 2.5L 4 Cyl. EHO = 3.9L 6 Cyl. EMO = 5.9L 8 Cyl. EVO = 4.7L Magnum EHC = 3.9L SMPI V6 EML = 5.9L V8 MPI Engine EPE = 2.5L POWER TECH I-4 Cyl. EVA = 4.7L V8 MPI	DDC = TRANSMISSION - 5-SPEED HD MANUAL DG4 = TRANSMISSION-MULTI-SPEED AUTO, 45RFE DGK = TRANSMISSION - 4-SPD. AUTOMATIC,42RE DGT = TRANSMISSION - 4-SPD. AUTOMATIC,46RE DGO = AUTO. TRANS.

Wiring Kit - Trailer Tow - 7 Way
Figure 1-240

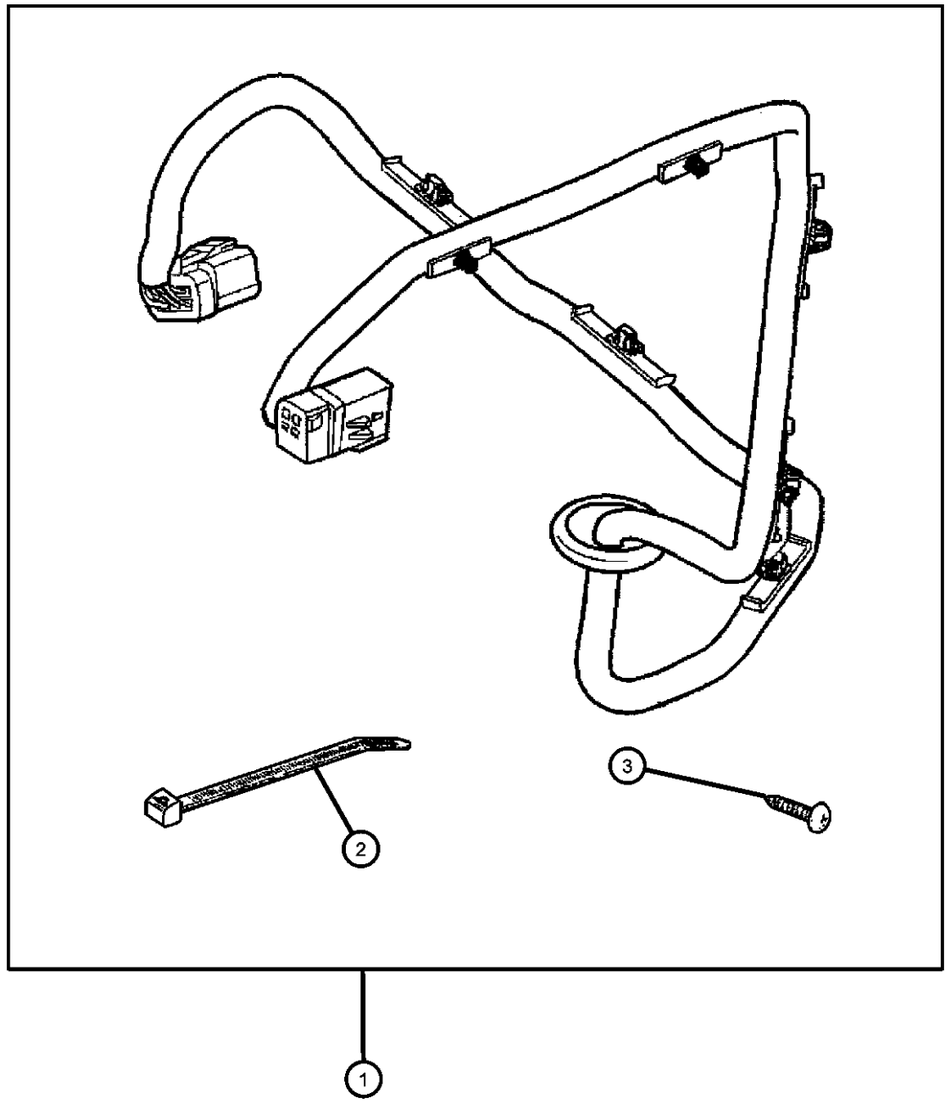

ITEM	PART NUMBER	QTY	LINE	SERIES	BODY	ENGINE	TRANS	TRIM	DESCRIPTION
NOTE: Will not fit Chassis Cab. Built in Running Light Relay.									
1	82204724	1	1, 5		31, 61, 84				WIRING KIT, Trailer Tow - 7 Way
2	06015756	1							STRAP, Tie
3	00154633	4							SCREW, .164-18x.625

DAKOTA (AN)

SERIES	LINE	BODY	ENGINE	TRANSMISSION
L = Quad Cab L = Regular Cab L = Club Cab	1 = Dakota 2WD 5 = Dakota 4WD	31 = CLUB CAB 2-DR 6.5 FT BOX 61 = REG CAB 6.5 FT BOX 84 = CREW CAB 4-DR W.B.1	EPO = 2.5L 4 Cyl. EHO = 3.9L 6 Cyl. EMO = 5.9L 8 Cyl. EVO = 4.7L Magnum EHC = 3.9L SMPI V6 EML = 5.9L V8 MPI Engine EPE = 2.5L POWER TECH I-4 Cyl. EVA = 4.7L V8 MPI	DDC = TRANSMISSION - 5-SPEED HD MANUAL DG4 = TRANSMISSION-MULTI-SPEED AUTO, 45RFE DGK = TRANSMISSION - 4-SPD. AUTOMATIC,42RE DGT = TRANSMISSION - 4-SPD. AUTOMATIC,46RE DGO = AUTO. TRANS.

Cooler Kit - Transmission Oil
Figure 1-250

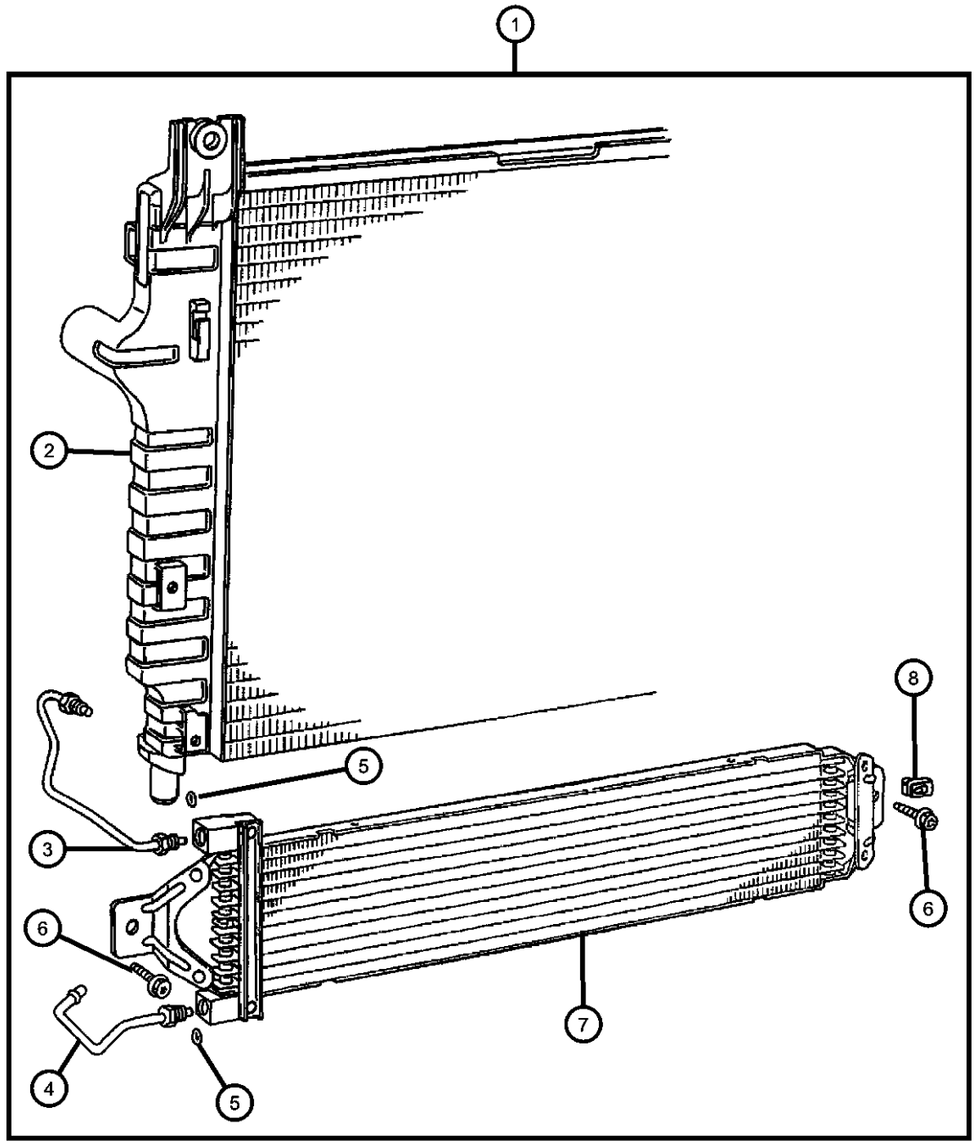

ITEM	PART NUMBER	QTY	LINE	SERIES	BODY	ENGINE	TRANS	TRIM	DESCRIPTION
1									COOLER KIT, Transmission Oil
	82205677	1	1, 5		31, 61, 84				3.9L V-6 Engine
	82205678	1	1, 5		31, 61, 84				4.7L, 5.9L V-8 Engines
2									RADIATOR, Engine Cooling
	52028816AA	1			31, 61, 84				3.9L V-6 Engine
	04267020AB								Mopar Coolant 3 Year Formula 1 Gallon
	52028818AB	1	1, 5		31, 61, 84				4.7L, 5.9L V-8 Engines
	04267020AB								Mopar Coolant 3 Year Formula 1 Gallon
3	05015416AA	1							TUBE, Oil Cooler, Inlet
4	05015415AA	1							TUBE, Oil Cooler, Outlet
5	05016144AA	2							SEAL, O-Ring
6	04734274	2							SCREW, Decking Bracket
7	52028779AA	1							COOLER, Auxiliary Oil
8	52028779AA	1							U-NUT, M6x1.00, (NOT SERVICED)

DAKOTA (AN)

SERIES	LINE	BODY	ENGINE	TRANSMISSION
L = Quad Cab	1 = Dakota 2WD	31 = CLUB CAB 2-DR 6.5 FT BOX	EPO = 2.5L 4 Cyl.	DDC = TRANSMISSION - 5-SPEED HD MANUAL
L = Regular Cab	5 = Dakota 4WD	61 = REG CAB 6.5 FT BOX	EHO = 3.9L 6 Cyl.	DG4 = TRANSMISSION-MULTI-SPEED AUTO, 45RFE
L = Club Cab		84 = CREW CAB 4-DR W.B.1	EMO = 5.9L 8 Cyl.	DGK = TRANSMISSION - 4-SPD. AUTOMATIC,42RE
			EVO = 4.7L Magnum	DGT = TRANSMISSION - 4-SPD. AUTOMATIC,46RE
			EHC = 3.9L SMPI V6	DGO = AUTO. TRANS.
			EML = 5.9L V8 MPI Engine	
			EPE = 2.5L POWER TECH I-4 Cyl.	
			EVA = 4.7L V8 MPI	

Cover Kit - Tonneau
Figure 1-260

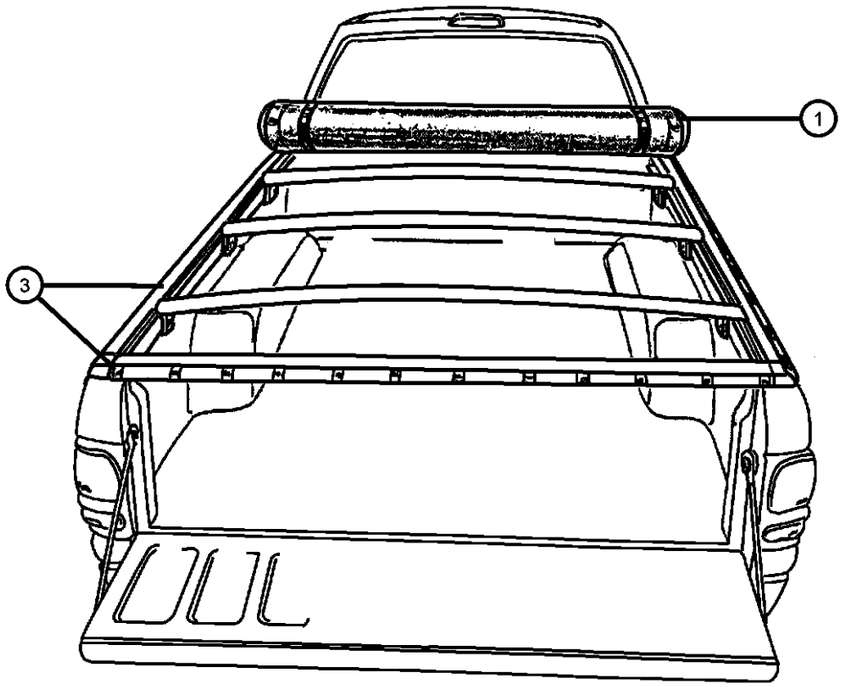

ITEM	PART NUMBER	QTY	LINE	SERIES	BODY	ENGINE	TRANS	TRIM	DESCRIPTION
NOTE; Not for use with OverRail Bedliners. Cover Kits have new material and new bow system.									
1									COVER, Tonneau
	82202723	1	1, 5		31, 61				Sport Style 6.5‘ Bed
	82203122	1	1, 5		31, 61				Premium Style 6.5‘ Bed
-2	05017515AA	1	1, 5		31, 61				SNAP KIT, Tonneau Cover, Replacement Package of 10
3	05018233AA	1	1, 5		31, 61				RAIL KIT, Tonneau - Rear Mounting, Contains: 2 Corner Brackets and Thumb Screws. Rear Rail Mounting.
-4	05018424AA	1	1, 5		31, 61				CLAMP, Cover, ‘F‘ Shaped Clamp is Upper ‘J‘ Shaped Clamp is Lower & 3 Screws for mounting

DAKOTA (AN)

SERIES	LINE	BODY	ENGINE	TRANSMISSION
L = Quad Cab	1 = Dakota 2WD	31 = CLUB CAB 2-DR 6.5 FT BOX	EPO = 2.5L 4 Cyl.	DDC = TRANSMISSION - 5-SPEED HD MANUAL
L = Regular Cab	5 = Dakota 4WD	61 = REG CAB 6.5 FT BOX	EHO = 3.9L 6 Cyl.	DG4 = TRANSMISSION-MULTI-SPEED AUTO, 45RFE
L = Club Cab		84 = CREW CAB 4-DR W.B.1	EMO = 5.9L 8 Cyl.	DGK = TRANSMISSION - 4-SPD. AUTOMATIC,42RE
			EVO = 4.7L Magnum	DGT = TRANSMISSION - 4-SPD. AUTOMATIC,46RE
			EHC = 3.9L SMPI V6	DGO = AUTO. TRANS.
			EML = 5.9L V8 MPI Engine	
			EPE = 2.5L POWER TECH I-4 Cyl.	
			EVA = 4.7L V8 MPI	

Cover Kit - Folding
Figure 1-270

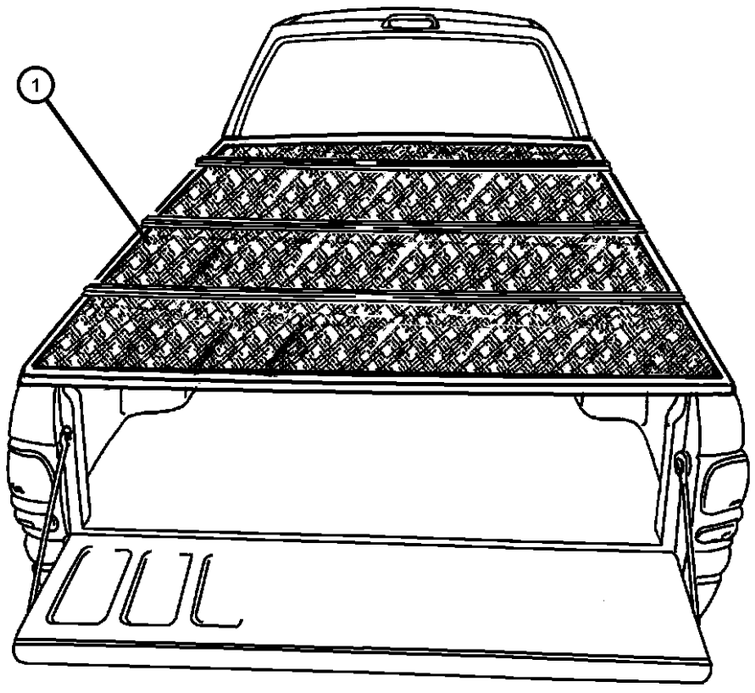

ITEM	PART NUMBER	QTY	LINE	SERIES	BODY	ENGINE	TRANS	TRIM	DESCRIPTION
NOTE; The kit contains mounting hardware									
1									COVER KIT, Tonneau-Folding
	82202727	1	1, 5		31, 61				
	82205224	1	1, 5		84				
-2									LOCK KIT, Folding-tonneau
	05018118AA	1	1, 5		31, 61				
		1	1, 5		84				
-3									KEY, Master
	05018386AA	1	1, 5		31, 61				
		1	1, 5		84				

DAKOTA (AN)

SERIES	LINE	BODY	ENGINE	TRANSMISSION
L = Quad Cab L = Regular Cab L = Club Cab	1 = Dakota 2WD 5 = Dakota 4WD	31 = CLUB CAB 2-DR 6.5 FT BOX 61 = REG CAB 6.5 FT BOX 84 = CREW CAB 4-DR W.B.1	EPO = 2.5L 4 Cyl. EHO = 3.9L 6 Cyl. EMO = 5.9L 8 Cyl. EVO = 4.7L Magnum EHC = 3.9L SMPI V6 EML = 5.9L V8 MPI Engine EPE = 2.5L POWER TECH I-4 Cyl. EVA = 4.7L V8 MPI	DDC = TRANSMISSION - 5-SPEED HD MANUAL DG4 = TRANSMISSION-MULTI-SPEED AUTO, 45RFE DGK = TRANSMISSION - 4-SPD. AUTOMATIC,42RE DGT = TRANSMISSION - 4-SPD. AUTOMATIC,46RE DGO = AUTO. TRANS.

Cover Kit - Tonneau
Figure 1-280

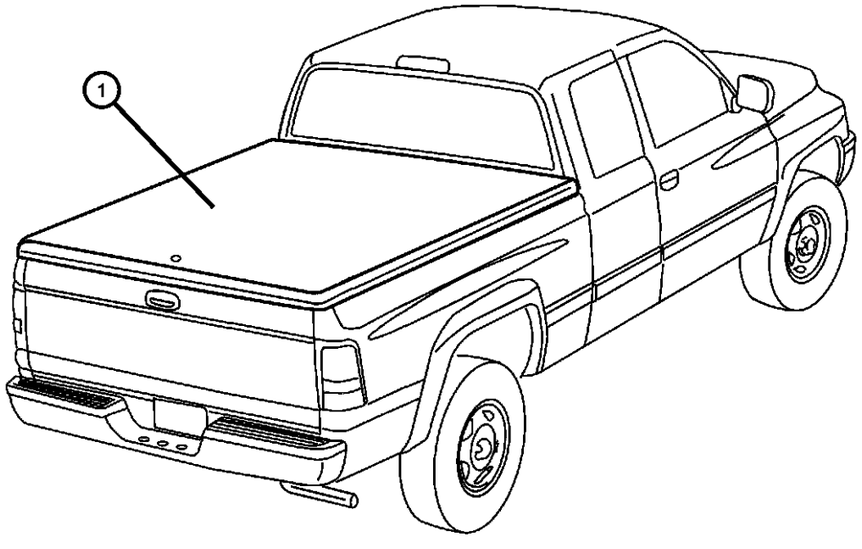

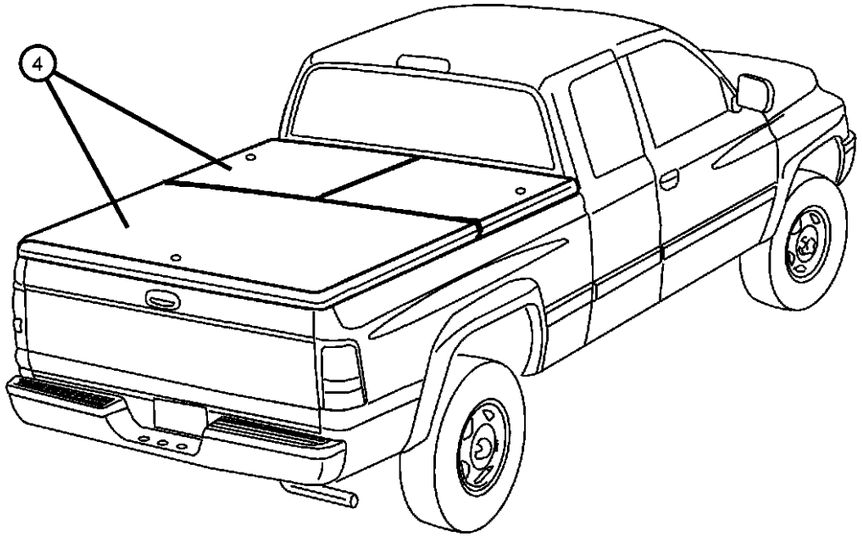

ITEM	PART NUMBER	QTY	LINE	SERIES	BODY	ENGINE	TRANS	TRIM	DESCRIPTION
NOTE; Use the Gas Props for the rear only. The kit contains two gas props, gas prop brackets for lid and frame - 2 of each bracket.									
1									COVER KIT, Tonneau-Hard, One Piece, 6.5‘ Bed
	82204160	1	1, 5		31, 61				Light Weight, w/Hasp on Tailgate, Forrest Green
	82204161	1	1, 5		31, 61				Light Weight, w/Hasp on Tailgate, Deep Amethyst
	82204162	1	1, 5		31, 61				Light Weight, w/Hasp on Tailgate, Intense Blue
	82204366	1	1, 5		31, 61				Black
	82204368	1	1, 5		31, 61				Flame Red
	82204370	1	1, 5		31, 61				White
	82204374	1	1, 5		31, 61				Light Driftwood
	82204376	1	1, 5		31, 61				Radian Red
	82205797	1	1, 5		31, 61				Patriot Blue
	82205798	1	1, 5		31, 61				Dark Garnet Red
	82205799	1	1, 5		31, 61				Sierra Bronze
	82205800	1	1, 5		31, 61				Amber Fire
-2	05018117AA	1	1, 5		31, 61				LOCK KIT, Hard-tonneau
-3	05018343AA	1	1, 5		31, 61				KEY, Master
4									COVER KIT, Tonneau-Hard, Three Piece
	82205069	1			84				Black
	82205070	1	1, 5		84				
	82205071	1			84				Driftwood
	82205072	1			84				Flame Red
	82205073	1			84				Forrest Green
	82205074	1			84				Intense Blue
	82205075	1			84				Solar Yellow
	82205076	1			84				Patriot Blue
	82205077	1			84				Garnet Red
	82205078	1			84				Medium Bronze
	82205079	1			84				Amber Fire
-5									GAS PROP KIT, Tonneau-hard
	05018067AA	1			84				Pair includes brackets

DAKOTA (AN)

SERIES	LINE	BODY	ENGINE	TRANSMISSION
L = Quad Cab L = Regular Cab L = Club Cab	1 = Dakota 2WD 5 = Dakota 4WD	31 = CLUB CAB 2-DR 6.5 FT BOX 61 = REG CAB 6.5 FT BOX 84 = CREW CAB 4-DR W.B.1	EPO = 2.5L 4 Cyl. EHO = 3.9L 6 Cyl. EMO = 5.9L 8 Cyl. EVO = 4.7L Magnum EHC = 3.9L SMPI V6 EML = 5.9L V8 MPI Engine EPE = 2.5L POWER TECH I-4 Cyl. EVA = 4.7L V8 MPI	DDC = TRANSMISSION - 5-SPEED HD MANUAL DG4 = TRANSMISSION-MULTI-SPEED AUTO, 45RFE DGK = TRANSMISSION - 4-SPD. AUTOMATIC,42RE DGT = TRANSMISSION - 4-SPD. AUTOMATIC,46RE DGO = AUTO. TRANS.

Cover Kit - Tonneau
Figure 1-280

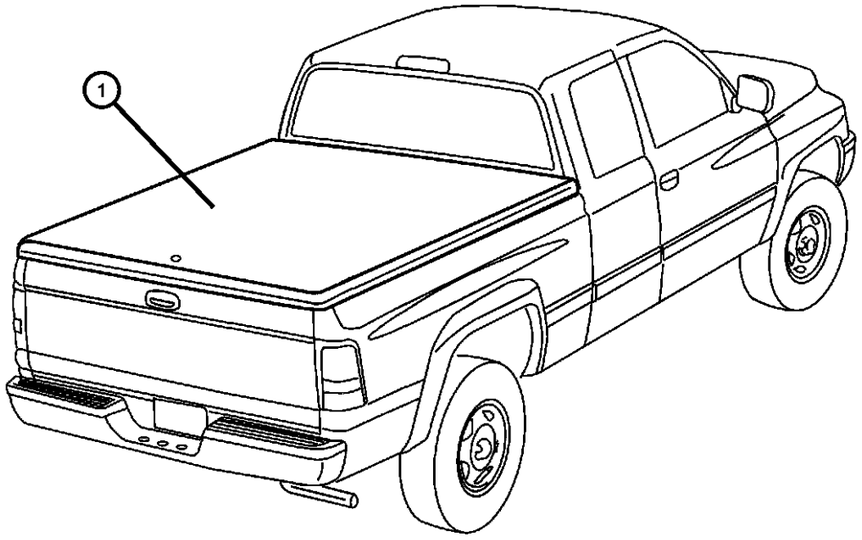

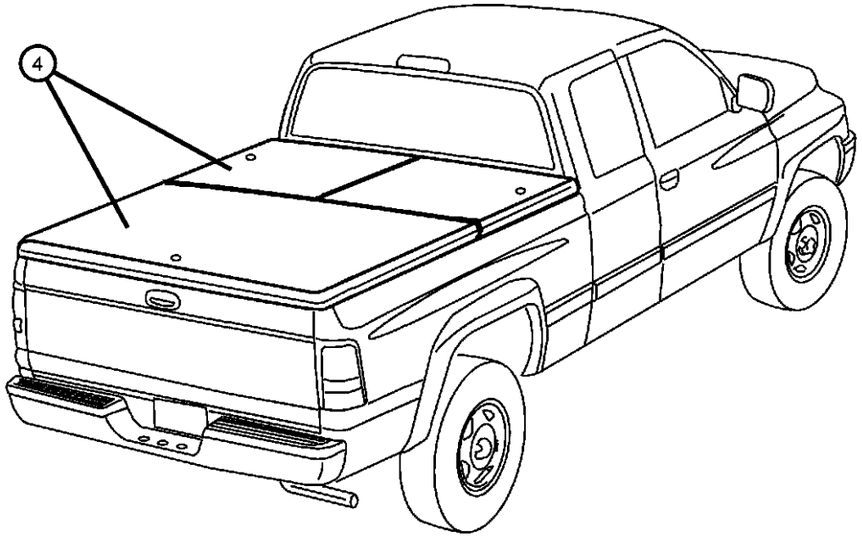

ITEM	PART NUMBER	QTY	LINE	SERIES	BODY	ENGINE	TRANS	TRIM	DESCRIPTION
	05018201AA	1			84				Gas Struts for the front
-6	05018117AA	1							LOCK KIT, Hard-tonneau
-7	05018343AA	1							KEY, Master

DAKOTA (AN)

SERIES	LINE	BODY	ENGINE	TRANSMISSION
L = Quad Cab	1 = Dakota 2WD	31 = CLUB CAB 2-DR 6.5 FT BOX	EPO = 2.5L 4 Cyl.	DDC = TRANSMISSION - 5-SPEED HD MANUAL
L = Regular Cab	5 = Dakota 4WD	61 = REG CAB 6.5 FT BOX	EHO = 3.9L 6 Cyl.	DG4 = TRANSMISSION-MULTI-SPEED AUTO, 45RFE
L = Club Cab		84 = CREW CAB 4-DR W.B.1	EMO = 5.9L 8 Cyl.	DGK = TRANSMISSION - 4-SPD. AUTOMATIC,42RE
			EVO = 4.7L Magnum	DGT = TRANSMISSION - 4-SPD. AUTOMATIC,46RE
			EHC = 3.9L SMPI V6	DGO = AUTO. TRANS.
			EML = 5.9L V8 MPI Engine	
			EPE = 2.5L POWER TECH I-4 Cyl.	
			EVA = 4.7L V8 MPI	

Speed Control Kit
Figure 1-310

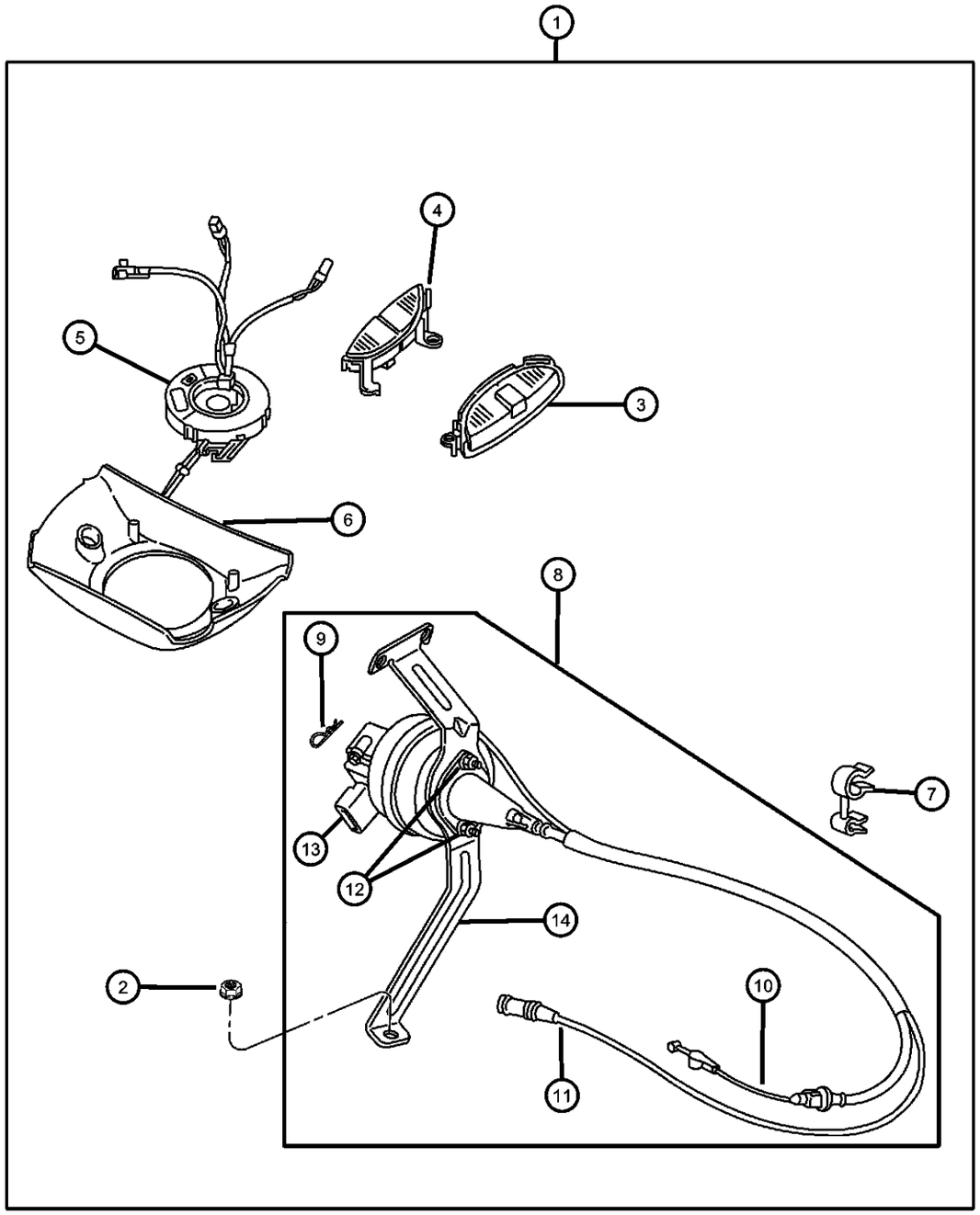

ITEM	PART NUMBER	QTY	LINE	SERIES	BODY	ENGINE	TRANS	TRIM	DESCRIPTION
1									CONTROL PACKAGE, Speed Control
	82205670	1	1, 5		31, 61, 84				3.9L V-6 Engine
	82205855	1	1, 5		31, 61, 84				4.7L V-8 Engine
	82205856	1	1, 5		31, 61, 84				5.9L V-8 Engine
2	82205856	1							NUT AND WASHER, M6x1.00, (NOT SERVICED),
3	56007630AB	1	1, 5		31, 61, 84				SWITCH, Speed ControlRight
4	56007631AB	1	1, 5		31, 61, 84				SWITCH, Speed ControlLeft
5	56045455AD	1							CLOCKSPRING
6	04897002AA	1	1, 5		31, 61, 84				SHROUD, Steering Column
7	53031995AA	1			31, 61, 84				CLIP, Cruise Control
8	53031995AA	1							CONTROL, Speed, Service Component Parts, (NOT SERVICED)
9	06025867	1							CLIP, Cable to Servo Attach
10									CABLE, Speed Control
	05015853AA	1							5.9L V-8 Engine
	05015856AA	1							3.9L V-6 Engine
	05015857AB	1							4.7L V-8 Engine
11									HARNESS, Speed Control Vacuum
	05015845AA	1							5.9L V-8 Engine
		1							3.9L V-6 Engine
	05015846AA	1							4.7L V-8 Engine
12	06500274	2							LOCK NUT, M6x1.0x6
13	04669977	1							SERVO, Speed Control
14	05015843AA	1							BRACKET, Cruise Control Servo

DAKOTA (AN)

SERIES	LINE	BODY	ENGINE	TRANSMISSION
L = Quad Cab L = Regular Cab L = Club Cab	1 = Dakota 2WD 5 = Dakota 4WD	31 = CLUB CAB 2-DR 6.5 FT BOX 61 = REG CAB 6.5 FT BOX 84 = CREW CAB 4-DR W.B.1	EPO = 2.5L 4 Cyl. EHO = 3.9L 6 Cyl. EMO = 5.9L 8 Cyl. EVO = 4.7L Magnum EHC = 3.9L SMPI V6 EML = 5.9L V8 MPI Engine EPE = 2.5L POWER TECH I-4 Cyl. EVA = 4.7L V8 MPI	DDC = TRANSMISSION - 5-SPEED HD MANUAL DG4 = TRANSMISSION-MULTI-SPEED AUTO, 45RFE DGK = TRANSMISSION - 4-SPD. AUTOMATIC,42RE DGT = TRANSMISSION - 4-SPD. AUTOMATIC,46RE DGO = AUTO. TRANS.

Mounting Kit - Cellular Phone
Figure 1-320

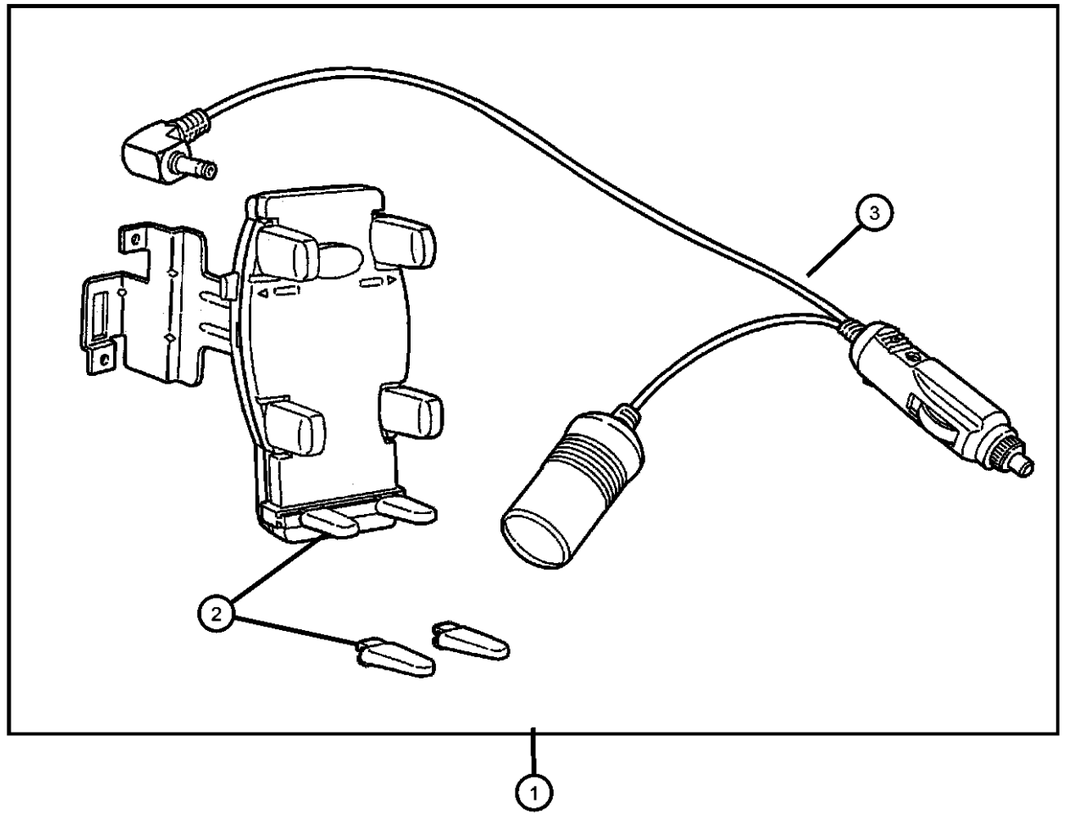

ITEM	PART NUMBER	QTY	LINE	SERIES	BODY	ENGINE	TRANS	TRIM	DESCRIPTION
NOTE; Smart Holder and Bracket Assy. Bracket to be black powder coated low gloss.									
NOTE: Holds any wireless handset. Installs to instrument panel.									
1	82205268	1	1, 5		31, 61, 84				MOUNTING KIT, Cellular Phone
2	05018103AA	1	1, 5		31, 61, 84				HARDWARE KIT, Accessory, Long Support Feet
3	05018104AA	1	1, 5		31, 61, 84				CORD, Cellular Phone

DAKOTA (AN)

SERIES	LINE	BODY	ENGINE	TRANSMISSION
L = Quad Cab	1 = Dakota 2WD	31 = CLUB CAB 2-DR 6.5 FT BOX	EPO = 2.5L 4 Cyl.	DDC = TRANSMISSION - 5-SPEED HD MANUAL
L = Regular Cab	5 = Dakota 4WD	61 = REG CAB 6.5 FT BOX	EHO = 3.9L 6 Cyl.	DG4 = TRANSMISSION-MULTI-SPEED AUTO, 45RFE
L = Club Cab		84 = CREW CAB 4-DR W.B.1	EMO = 5.9L 8 Cyl.	DGK = TRANSMISSION - 4-SPD. AUTOMATIC,42RE
			EVO = 4.7L Magnum	DGT = TRANSMISSION - 4-SPD. AUTOMATIC,46RE
			EHC = 3.9L SMPI V6	DGO = AUTO. TRANS.
			EML = 5.9L V8 MPI Engine	
			EPE = 2.5L POWER TECH I-4 Cyl.	
			EVA = 4.7L V8 MPI	

Wheel Lip Mouldings
Figure 1-410

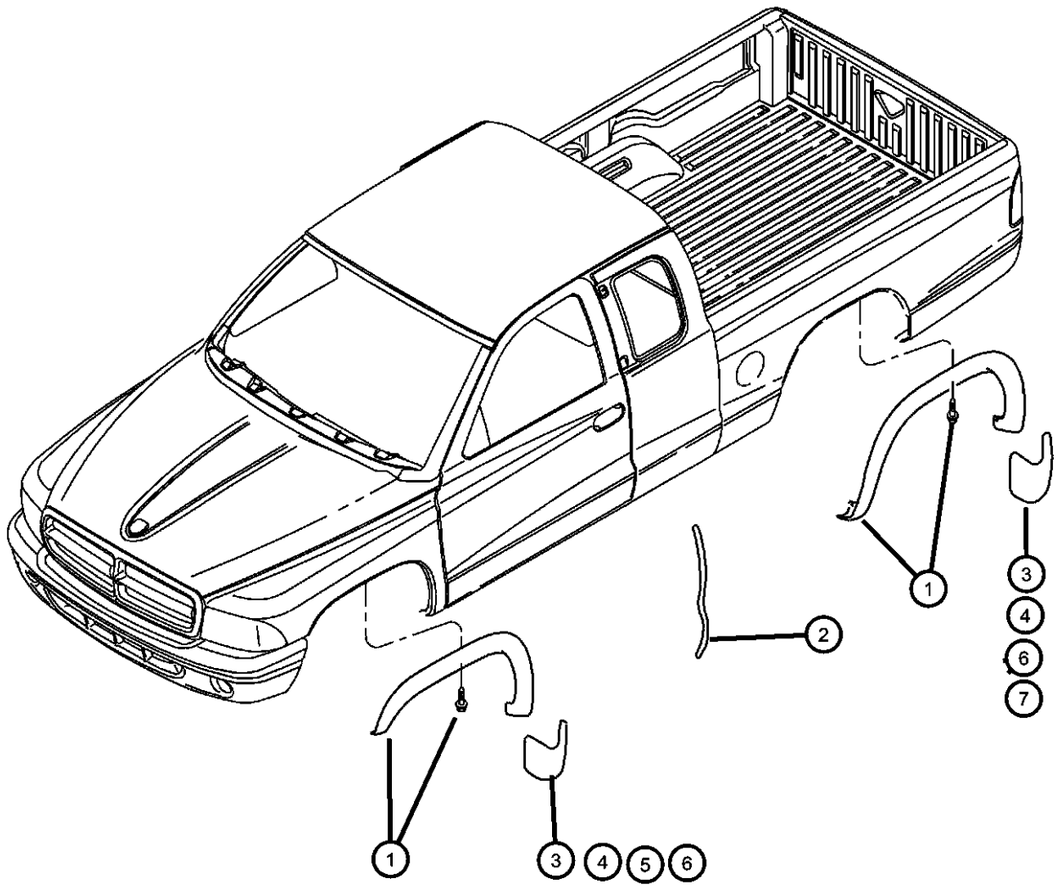

ITEM	PART NUMBER	QTY	LINE	SERIES	BODY	ENGINE	TRANS	TRIM	DESCRIPTION
NOTE' Mounting Hardware is included in Wheel Lip Moulding Kits.									
.									
1									MOLDING KIT, Wheel Lip Opening
	82202877	1	1, 5		31, 61				Light Driftwood [PFA]
	82202882	1	1, 5		31, 61				Metallic Red [PRF]
	82202883	1	1, 5		31, 61				Flame Red [PR4]
	82202884	1	1, 5		31, 61				Black [PX8]
	82202885	1	1, 5		31, 61				Bright White [PW7]
	82204179	1	1, 5		31, 61				Forest Green [PG8]
	82204180	1	1, 5		31, 61				Intense Blue [PB3]
	82204181	1	1, 5		31, 61				Deep Amethyst [PCU]
	82205251	1	1, 5		84				Amber Fire [PV3]
	82205252	1	1, 5		84				Black [PX8]
	82205253	1	1, 5		84				Bright White [PW7]
	82205254	1	1, 5		84				Dark Garnet Red [PRV]
	82205255	1	1, 5		84				Flame Red [PR4]
	82205256	1	1, 5		84				Forest Green [PG8]
	82205257	1	1, 5		84				Intense Blue [PB3]
	82205258	1	1, 5		84				Light Driftwood [PFA]
	82205259	1	1, 5		84				Patriot Blue [PBT]
	82205260	1	1, 5		84				Sierra Bronze [PTL]
	82205261	1	1, 5		84				Solar Yellow [PYH]
	82205806	1	1, 5		31, 61				Amber Fire [PV3]
	82205807	1	1, 5		31, 61				Dark Garnet Red [PRV]
	82205808	1	1, 5		31, 61				Patriot Blue [PBT]
	82205809	1	1, 5		31, 61				Sierra Bronze [PTL]
2	82202760	1	1, 5		31, 61, 84				GUARD KIT, Door Edge
3	82202719	1	1, 5		31, 61, 84				GUARD KIT, Splash Molded
4									GUARD KIT, Splash Flat - Front and Rear
	82202909	1	1		31, 61, 84				Black Rubber with Dodge Logo, 2WD
	82202910	1	5		31, 61, 84				Black Rubber with Dodge Logo,4WD

DAKOTA (AN)

SERIES	LINE	BODY	ENGINE	TRANSMISSION
L = Quad Cab L = Regular Cab L = Club Cab	1 = Dakota 2WD 5 = Dakota 4WD	31 = CLUB CAB 2-DR 6.5 FT BOX 61 = REG CAB 6.5 FT BOX 84 = CREW CAB 4-DR W.B.1	EPO = 2.5L 4 Cyl. EHO = 3.9L 6 Cyl. EMO = 5.9L 8 Cyl. EVO = 4.7L Magnum EHC = 3.9L SMPI V6 EML = 5.9L V8 MPI Engine EPE = 2.5L POWER TECH I-4 Cyl. EVA = 4.7L V8 MPI	DDC = TRANSMISSION - 5-SPEED HD MANUAL DG4 = TRANSMISSION-MULTI-SPEED AUTO, 45RFE DGK = TRANSMISSION - 4-SPD. AUTOMATIC,42RE DGT = TRANSMISSION - 4-SPD. AUTOMATIC,46RE DGO = AUTO. TRANS.

Wheel Lip Mouldings
Figure 1-410

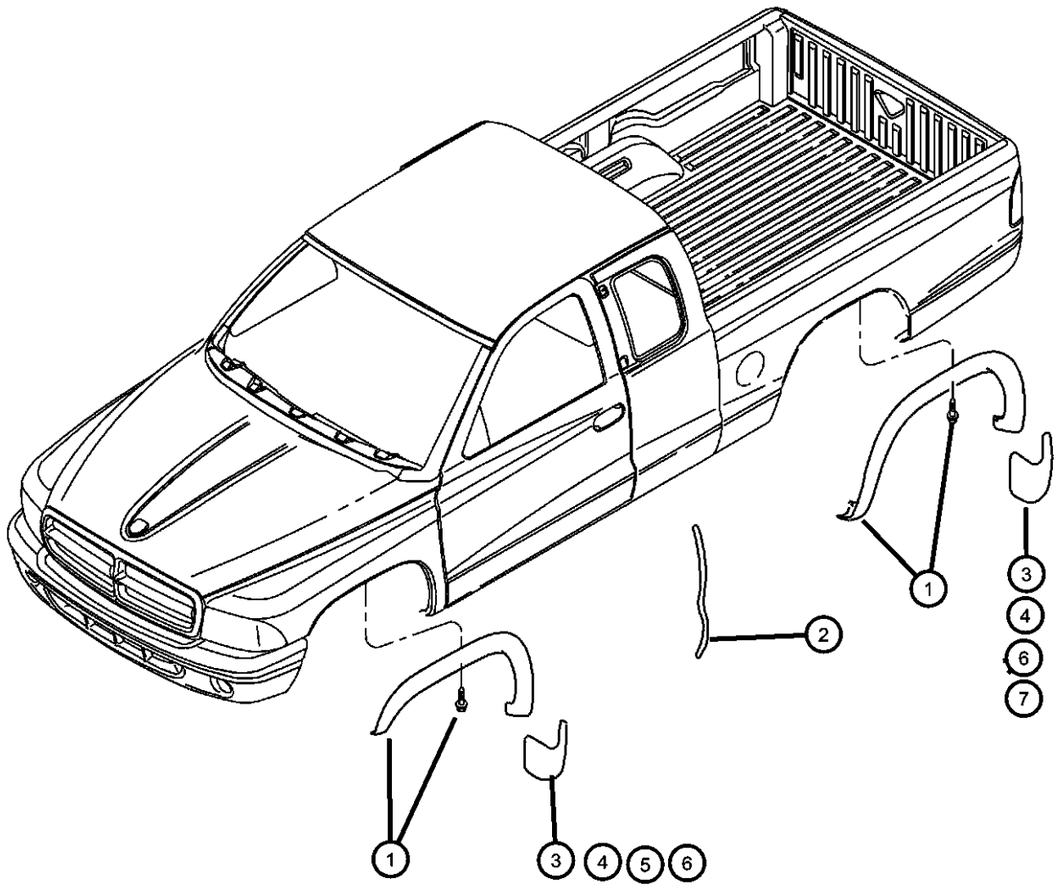

ITEM	PART NUMBER	QTY	LINE	SERIES	BODY	ENGINE	TRANS	TRIM	DESCRIPTION
	82202911	1	1		31, 61, 84				
	82202912	1	5		31, 61, 84				
5	82203473	1	1, 5		31, 61, 84				GUARD KIT, Splash Molded - Front
6									GUARD KIT, Splash Flat
	82203704	1	1		31, 61, 84				
	82203705	1	1, 5		31, 61, 84				
7									GUARD KIT, Splash Molded - Rear
	82203619	1	1, 5		31, 61				
	82204879	1							

DAKOTA (AN)

SERIES	LINE	BODY	ENGINE	TRANSMISSION
L = Quad Cab	1 = Dakota 2WD	31 = CLUB CAB 2-DR 6.5 FT BOX	EPO = 2.5L 4 Cyl.	DDC = TRANSMISSION - 5-SPEED HD MANUAL
L = Regular Cab	5 = Dakota 4WD	61 = REG CAB 6.5 FT BOX	EHO = 3.9L 6 Cyl.	DG4 = TRANSMISSION-MULTI-SPEED AUTO, 45RFE
L = Club Cab		84 = CREW CAB 4-DR W.B.1	EMO = 5.9L 8 Cyl.	DGK = TRANSMISSION - 4-SPD. AUTOMATIC,42RE
			EVO = 4.7L Magnum	DGT = TRANSMISSION - 4-SPD. AUTOMATIC,46RE
			EHC = 3.9L SMPI V6	DGO = AUTO. TRANS.
			EML = 5.9L V8 MPI Engine	
			EPE = 2.5L POWER TECH I-4 Cyl.	
			EVA = 4.7L V8 MPI	

Grille and Brush Guards
Figure 1-420

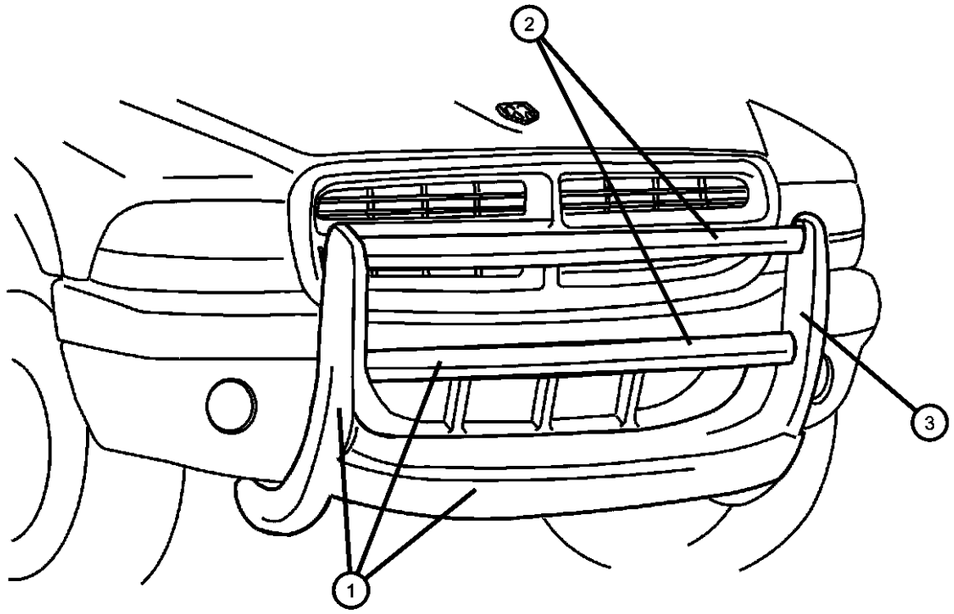

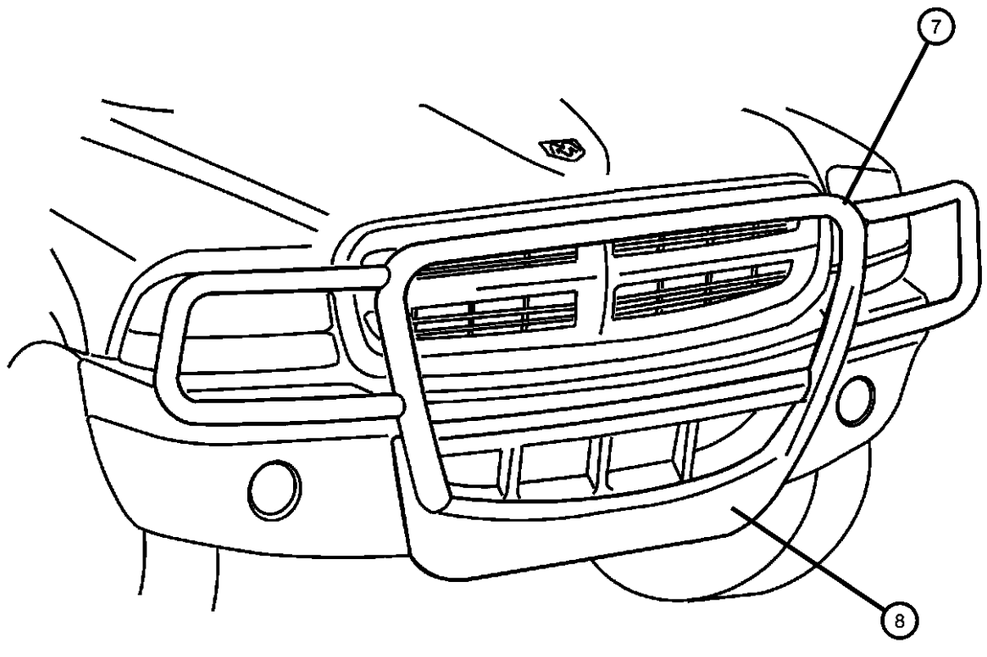

ITEM	PART NUMBER	QTY	LINE	SERIES	BODY	ENGINE	TRANS	TRIM	DESCRIPTION
1									GUARD KIT, Grille, With Lower Fascia
	82202741	1	1, 5		31, 61, 84				Black, Fog Lamp Provision
	82202979	1	1, 5		31, 61, 84				FIlame Red, Fog Lamp Provision
	82202980	1	1, 5		31, 61, 84				White, Fog Lamp Provision
	82203796	1	1, 5		31, 61, 84				Chili Pepper Red, Fog Lamp Provision
	82203797	1	1, 5		31, 61, 84				Light Driftwood, Fog Lamp Provision
	82203798	1	1, 5		31, 61, 84				Forest Green, Fog Lamp Provision
	82203799	1	1, 5		31, 61, 84				Deep Amethyst, Fog Lamp Provision
	82203800	1	1, 5		31, 61, 84				Intense Blue, Fog Lamp Provision
2	05018326AA	1	1, 5		31, 61, 84				CROSSTUBE, Grille Guard, Paint as Required
3									END CAP, Grille Guard
	05018328AA	1	1, 5		31, 61, 84				Right
	05018329AA	1	1, 5		31, 61, 84				Left
-4									GUARD KIT, Grille, Without Lower Fascia
	82203185	1	1, 5		31, 61, 84				Black Painted Steel, Fog Lamp Provisions
	82203186	1	1, 5		31, 61, 84				Natural Finish Aluminum, Fog Lamp Provisions
	82203187	1	1, 5		31, 61, 84				Black Anodized Aluminum, Fog Lamp Provisions
	82203188	1	1, 5		31, 61, 84				Chrome Finish Steel, Fog Lamp Provisions
-5									CROSSTUBE, Grille Guard
	05018326AA	1	1, 5		31, 61, 84				Paint as Required, Cross Tubes
	05018438AA	1	1, 5		31, 61, 84				Chrome Finish, Cross Tubes
	05018439AA	1	1, 5		31, 61, 84				Natural Finish Aluminum, Cross Tubes
	05018440AA	1	1, 5		31, 61, 84				Black Anodized, Cross Tubes
-6									END CAP, Grille Guard
	05018328AA	1	1, 5		31, 61, 84				Right
	05018329AA	1	1, 5		31, 61, 84				Left

DAKOTA (AN)

SERIES	LINE	BODY	ENGINE	TRANSMISSION
L = Quad Cab L = Regular Cab L = Club Cab	1 = Dakota 2WD 5 = Dakota 4WD	31 = CLUB CAB 2-DR 6.5 FT BOX 61 = REG CAB 6.5 FT BOX 84 = CREW CAB 4-DR W.B.1	EPO = 2.5L 4 Cyl. EHO = 3.9L 6 Cyl. EMO = 5.9L 8 Cyl. EVO = 4.7L Magnum EHC = 3.9L SMPI V6 EML = 5.9L V8 MPI Engine EPE = 2.5L POWER TECH I-4 Cyl. EVA = 4.7L V8 MPI	DDC = TRANSMISSION - 5-SPEED HD MANUAL DG4 = TRANSMISSION-MULTI-SPEED AUTO, 45RFE DGK = TRANSMISSION - 4-SPD. AUTOMATIC,42RE DGT = TRANSMISSION - 4-SPD. AUTOMATIC,46RE DGO = AUTO. TRANS.

Grille and Brush Guards
Figure 1-420

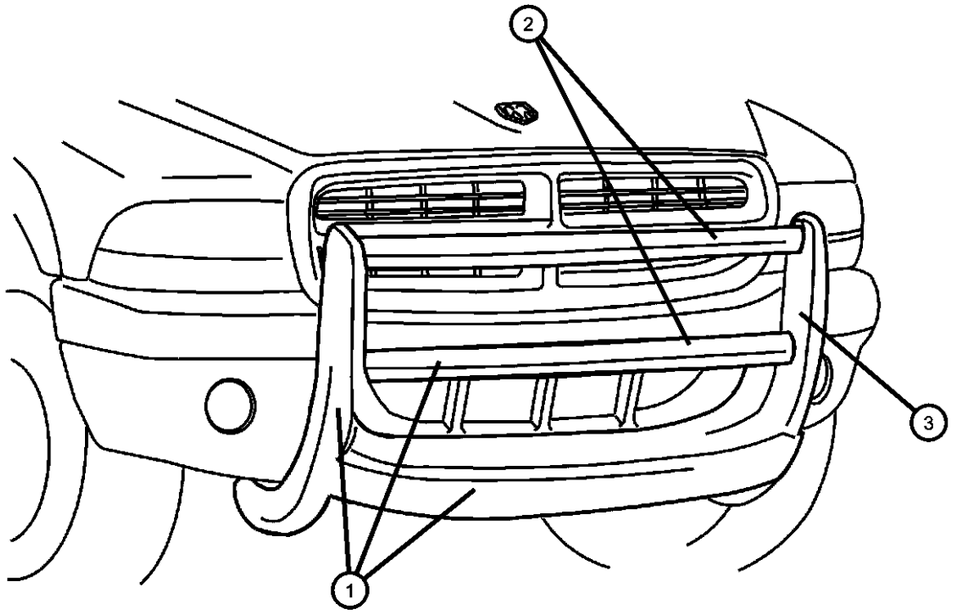

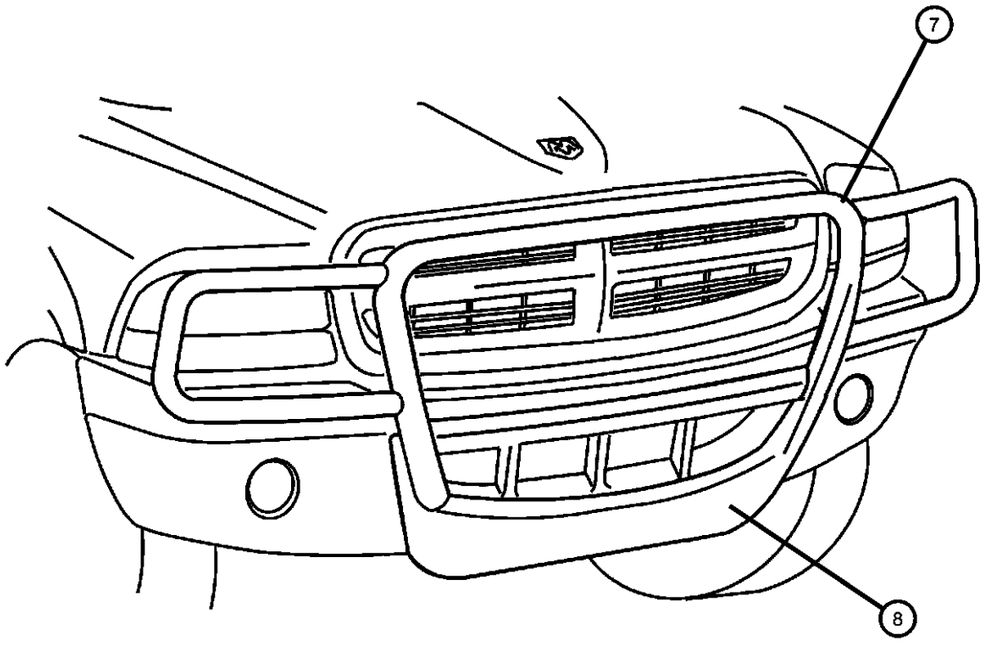

ITEM	PART NUMBER	QTY	LINE	SERIES	BODY	ENGINE	TRANS	TRIM	DESCRIPTION
7									GUARD KIT, Brush/Grille, With Lower Fascia
	82203803	1	1, 5		31, 61, 84				Light Driftwood
	82203804	1	1, 5		31, 61, 84				Deep Amethyst
	82203805	1	1, 5		31, 61, 84				Intense Blue
	82203807	1	1, 5		31, 61, 84				Chromed Steel
	82203922	1	1, 5		31, 61, 84				Black
	82203923	1	1, 5		31, 61, 84				Chili Pepper Red
	82203924	1	1, 5		31, 61, 84				Bright White
	82203925	1	1, 5		31, 61, 84				Flame Red
	82203926	1	1, 5		31, 61, 84				Forest Green
	82204017	1	1, 5		31, 61, 84				Natural Anodized Aluminum
	82205142	1	1, 5		31, 61, 84				Patriot Blue
	82205143	1	1, 5		31, 61, 84				Platinum
	82205762	1	1, 5		31, 61, 84				Aquamarine
	82205763	1	1, 5		31, 61, 84				Sierra Bronze
8	05018364AA	1	1, 5		31, 61, 84				FASCIA, Front, Primed
-9									GUARD KIT, Brush/Grille, Without Lower Fascia
	82202742	1	1, 5		31, 61, 84				Natural Anodized Aluminum
	82202743	1	1, 5		31, 61, 84				Black Anodized Aluminum
	82202744	1	1, 5		31, 61, 84				Black Steel
	82202978	1	1, 5		31, 61, 84				Chromed Steel

DAKOTA (AN)

SERIES	LINE	BODY	ENGINE	TRANSMISSION
L = Quad Cab L = Regular Cab L = Club Cab	1 = Dakota 2WD 5 = Dakota 4WD	31 = CLUB CAB 2-DR 6.5 FT BOX 61 = REG CAB 6.5 FT BOX 84 = CREW CAB 4-DR W.B.1	EPO = 2.5L 4 Cyl. EHO = 3.9L 6 Cyl. EMO = 5.9L 8 Cyl. EVO = 4.7L Magnum EHC = 3.9L SMPI V6 EML = 5.9L V8 MPI Engine EPE = 2.5L POWER TECH I-4 Cyl. EVA = 4.7L V8 MPI	DDC = TRANSMISSION - 5-SPEED HD MANUAL DG4 = TRANSMISSION-MULTI-SPEED AUTO, 45RFE DGK = TRANSMISSION - 4-SPD. AUTOMATIC,42RE DGT = TRANSMISSION - 4-SPD. AUTOMATIC,46RE DGO = AUTO. TRANS.

Running Board
Figure 1-430

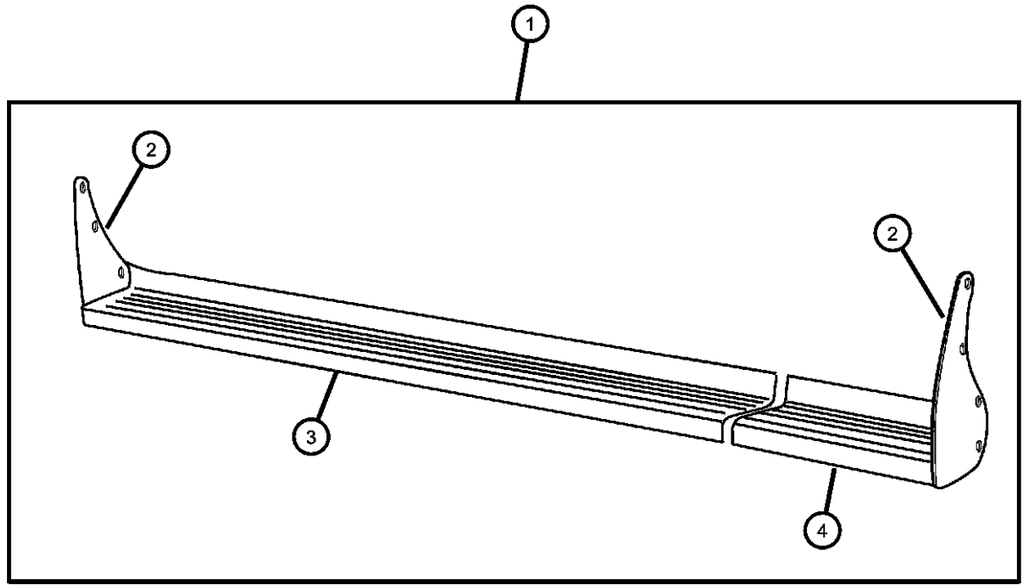

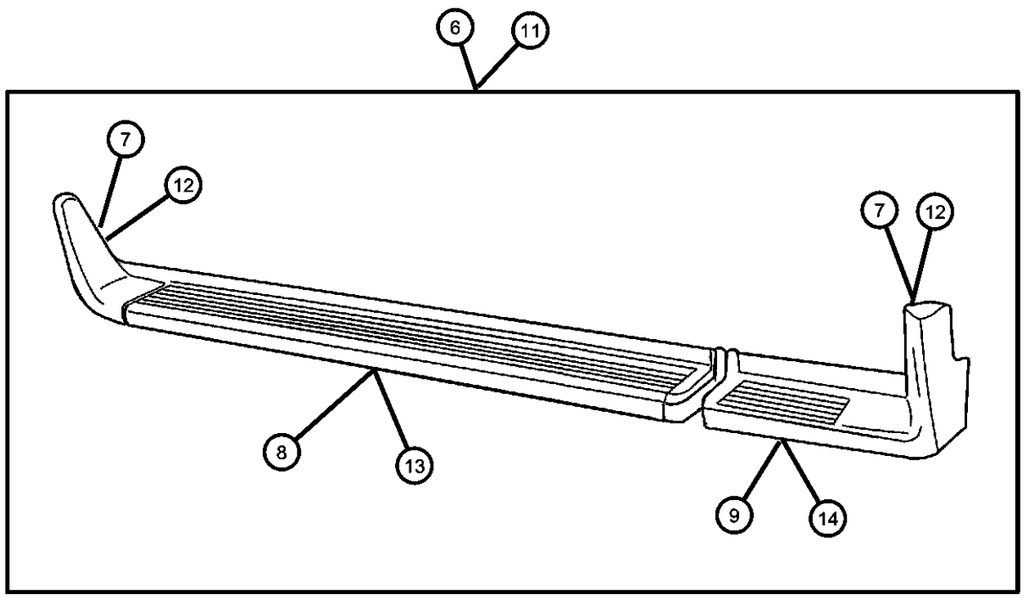

ITEM	PART NUMBER	QTY	LINE	SERIES	BODY	ENGINE	TRANS	TRIM	DESCRIPTION
WILL NOT WORK WITH FRONT SLASHGUARDS.									
1	82202752	1	1, 5		31				RUNNING BOARD KIT, Full, Alumimum
2									END CAP, Running Board
	05010526AA	1			31				Right Rear and Left Front
	05010539AA	1			31				Right Front and Left Rear
3									RUNNING BOARD, Club Cab
	05017038AA	1			31				Right
	05017039AA	1			31				Left
4									RUNNING BOARD, 6.5 Foot box
	05017040AA	1			31				Right
	05017041AA	1			31				Left
-5	05010603AA	1							HARDWARE KIT, Running Board
6									RUNNING BOARD KIT, Full, Molded, Club Cab
	82202649	1			31				Black, [PX8]
	82202654	1			31				Bright White, [PW7]
	82202659	1			31				Emerald Green, [PGF]
	82202669	1			31				Flame Red, [PR4]
	82202674	1			31				Radiant Red, [PRF]
	82204002	1	1, 5		31				Forest Green, [SG8]
	82204003	1	1, 5		31				Deep Amethyst, [TCU]
	82204004	1	1, 5		31				Intense Blue, [VB3]
7									END CAP, Running Board, P.A.R.
	05010526AA	1			31				Right Rear and Left Front
	05010539AA	1							Right Front and Left Rear
8									RUNNING BOARD, Club Cab, P.A.R.
	05017038AA	1			31				Right
	05017039AA	1			31				Left
9									RUNNING BOARD, 6.5 Foot box, P.A.R.
	05017040AA	1			31				Right
	05017041AA	1			31				Left

DAKOTA (AN)

SERIES	LINE	BODY	ENGINE	TRANSMISSION
L = Quad Cab L = Regular Cab L = Club Cab	1 = Dakota 2WD 5 = Dakota 4WD	31 = CLUB CAB 2-DR 6.5 FT BOX 61 = REG CAB 6.5 FT BOX 84 = CREW CAB 4-DR W.B.1	EPO = 2.5L 4 Cyl. EHO = 3.9L 6 Cyl. EMO = 5.9L 8 Cyl. EVO = 4.7L Magnum EHC = 3.9L SMPI V6 EML = 5.9L V8 MPI Engine EPE = 2.5L POWER TECH I-4 Cyl. EVA = 4.7L V8 MPI	DDC = TRANSMISSION - 5-SPEED HD MANUAL DG4 = TRANSMISSION-MULTI-SPEED AUTO, 45RFE DGK = TRANSMISSION - 4-SPD. AUTOMATIC,42RE DGT = TRANSMISSION - 4-SPD. AUTOMATIC,46RE DGO = AUTO. TRANS.

Running Board
Figure 1-430

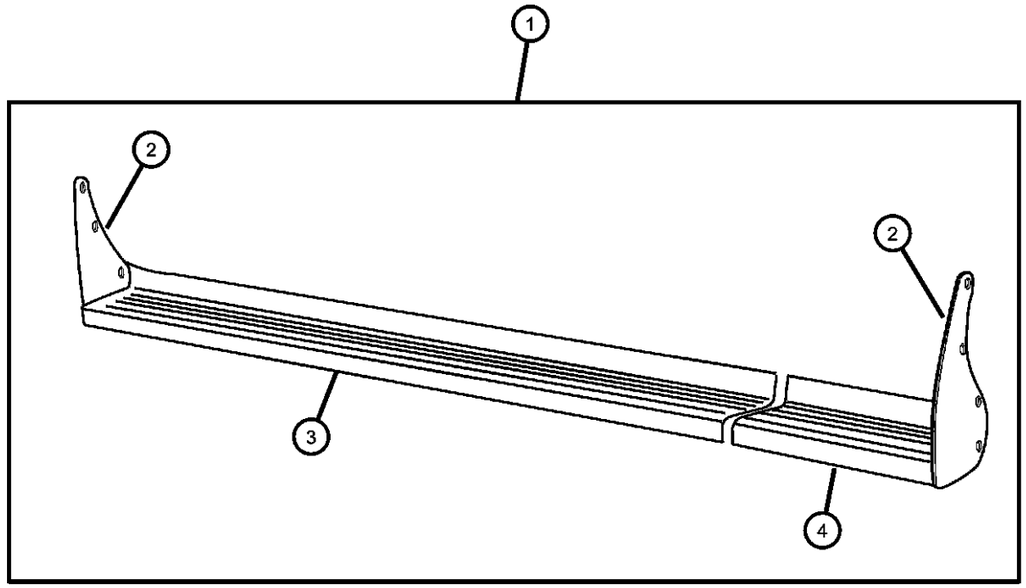

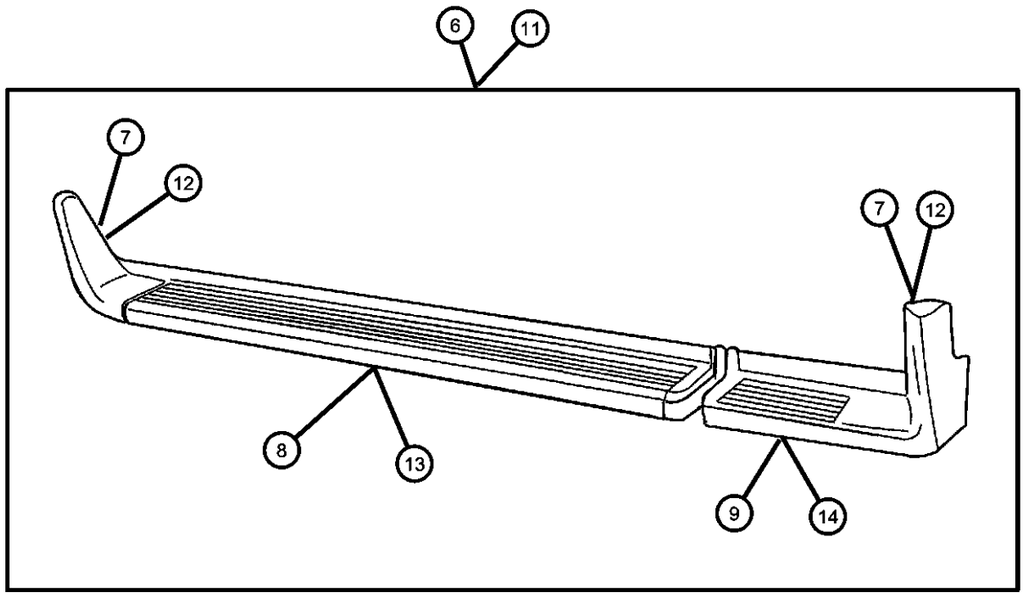

ITEM	PART NUMBER	QTY	LINE	SERIES	BODY	ENGINE	TRANS	TRIM	DESCRIPTION
-10	05010603AA	1							HARDWARE KIT, Running Board
11									RUNNING BOARD KIT, Full, Molded, Standard Cab
	82202646	1			61				Black, [PX8]
	82202651	1			61				Bright White, [PW7]
	82202661	1			61				Driftwood, [PFA]
	82202671	1			61				Radiant Red, [PRF]
	82203999	1	1, 5		61				Forest Green, [SG8]
	82204000	1	1, 5		61				Deep Amethyst, [TCU]
	82204001	1	1, 5		61				Intense Blue, [VB3]
12									END CAP, Running Board, P.A.R.
	05010526AA	1			61				Right Rear and Left Front
	05010539AA	1			61				Right Front and Left Rear
13									RUNNING BOARD, Standard Cab, P.A.R.
	05017036AA	1			61				Right
	05017037AA	1			61				Left
14									RUNNING BOARD, 6.5 Foot box, P.A.R.
	05017040AA	1			61				Right
	05017041AA	1			61				Left
-15	05010603AA	1							HARDWARE KIT, Running Board

DAKOTA (AN)

SERIES	LINE	BODY	ENGINE	TRANSMISSION
L = Quad Cab L = Regular Cab L = Club Cab	1 = Dakota 2WD 5 = Dakota 4WD	31 = CLUB CAB 2-DR 6.5 FT BOX 61 = REG CAB 6.5 FT BOX 84 = CREW CAB 4-DR W.B.1	EPO = 2.5L 4 Cyl. EHO = 3.9L 6 Cyl. EMO = 5.9L 8 Cyl. EVO = 4.7L Magnum EHC = 3.9L SMPI V6 EML = 5.9L V8 MPI Engine EPE = 2.5L POWER TECH I-4 Cyl. EVA = 4.7L V8 MPI	DDC = TRANSMISSION - 5-SPEED HD MANUAL DG4 = TRANSMISSION-MULTI-SPEED AUTO, 45RFE DGK = TRANSMISSION - 4-SPD. AUTOMATIC,42RE DGT = TRANSMISSION - 4-SPD. AUTOMATIC,46RE DGO = AUTO. TRANS.

Side Steps, Molded and Tubular
Figure 1-440

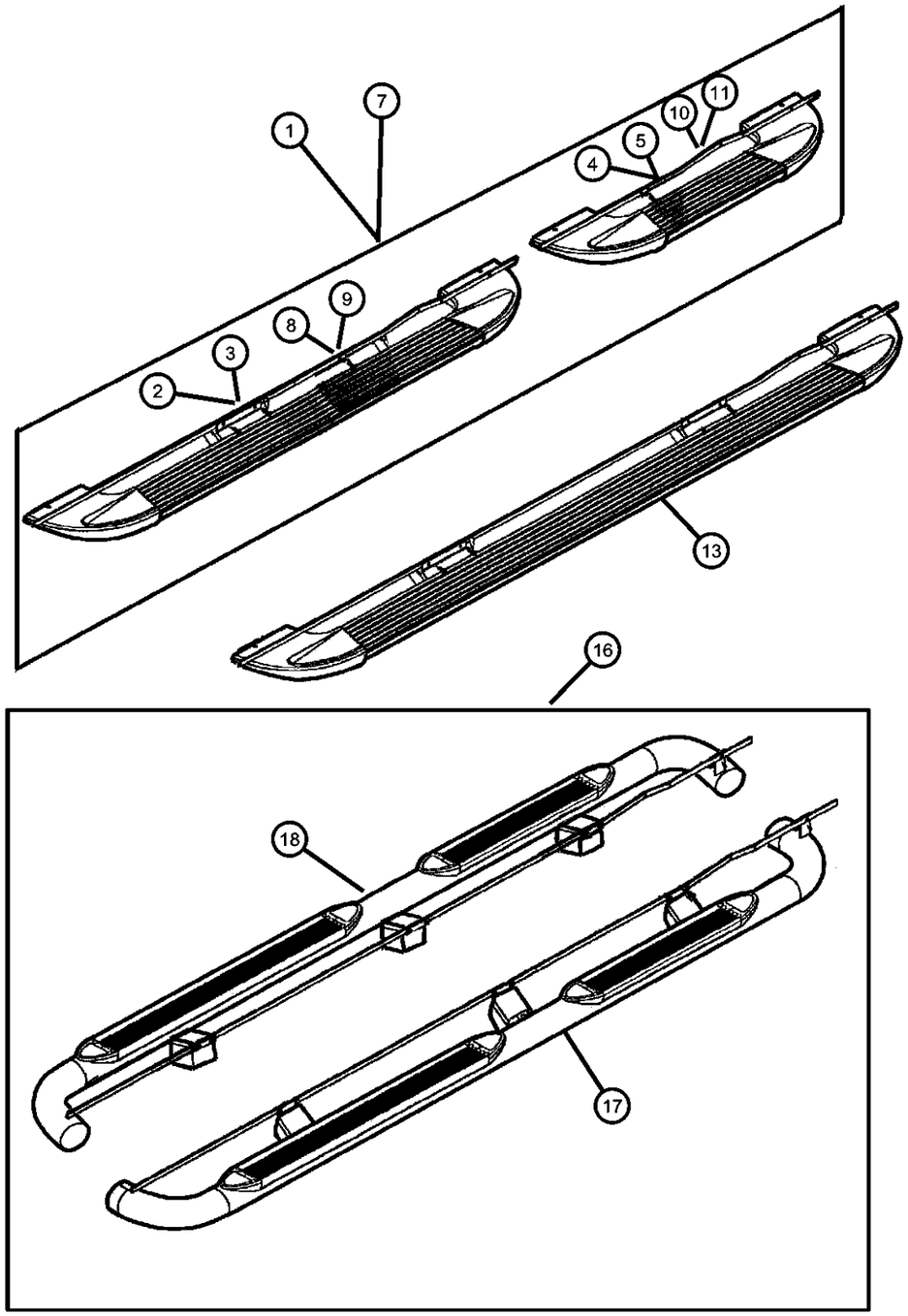

ITEM	PART NUMBER	QTY	LINE	SERIES	BODY	ENGINE	TRANS	TRIM	DESCRIPTION
1									STEP KIT, Truck - Full, Standard Cab
	82202890	1	1, 5		61				Bright White, [PW7]
	82202901	1	1, 5		61				Black, [PX8]
	82202919	1	1, 5		61				Flame Red, [PR4]
	82203467	1	1, 5		61				Metallic Red, [PRF]
	82203469	1	1, 5		61				Light Driftwood, [PFK]
	82204144	1	1, 5		61				Forest Green, [PG8]
	82204145	1	1, 5		61				Deep Amethyst, [PCN]
	82204146	1	1, 5		61				Intense Blue, [PB3]
	82204922	1			61				Solar Yellow, [PYH]
2	05018242AA	1	1, 5		61				STEP KIT, Right Side, P.A.R., Passenger, Cab Section
3	05018243AA	1	1, 5		61				STEP KIT, Left Side, P.A.R., Driver Cab Section
4	05018244AA	1	1, 5		61				STEP KIT, Right Side, P.A.R., Passenger Bed Section
5	05018245AA	1	1, 5		61				STEP KIT, Left Side, P.A.R., Driver, Bed Section
-6	05010603AA	1							HARDWARE KIT, Running Board
7									STEP KIT, Truck - Full, Club Cab
	82202893	1	1, 5		31				Bright White, [PW7]
	82202904	1	1, 5		31				Black, [PX8]
	82202922	1	1, 5		31				Flame Red, [PR4]
	82203468	1	1, 5		31				Metallic Red, [PRF]
	82203470	1	1, 5		31				Light Driftwood, [PFK]
	82204141	1	1, 5		31				Forest Green, [PG8]
	82204142	1	1, 5		31				Deep Amethyst, [PCN]
	82204143	1	1, 5		31				Intense Blue, [PB3]
	82204923	1			61				Solar Yellow, [PYH]
8	05018246AA	1	1, 5		31				STEP KIT, Right Side, P.A.R., Passenger, Cab Section
9	05018247AA	1	1, 5		31				STEP KIT, Left Side, P.A.R., Driver, Cab Section
10	05018244AA	1	1, 5		31				STEP KIT, Right Side, P.A.R., Passenger, Bed Section

DAKOTA (AN)

SERIES	LINE	BODY	ENGINE	TRANSMISSION
L = Quad Cab L = Regular Cab L = Club Cab	1 = Dakota 2WD 5 = Dakota 4WD	31 = CLUB CAB 2-DR 6.5 FT BOX 61 = REG CAB 6.5 FT BOX 84 = CREW CAB 4-DR W.B.1	EPO = 2.5L 4 Cyl. EHO = 3.9L 6 Cyl. EMO = 5.9L 8 Cyl. EVO = 4.7L Magnum EHC = 3.9L SMPI V6 EML = 5.9L V8 MPI Engine EPE = 2.5L POWER TECH I-4 Cyl. EVA = 4.7L V8 MPI	DDC = TRANSMISSION - 5-SPEED HD MANUAL DG4 = TRANSMISSION-MULTI-SPEED AUTO, 45RFE DGK = TRANSMISSION - 4-SPD. AUTOMATIC,42RE DGT = TRANSMISSION - 4-SPD. AUTOMATIC,46RE DGO = AUTO. TRANS.

AR = use ase required - = Non illustrrated part

Side Steps, Molded and Tubular
Figure 1-440

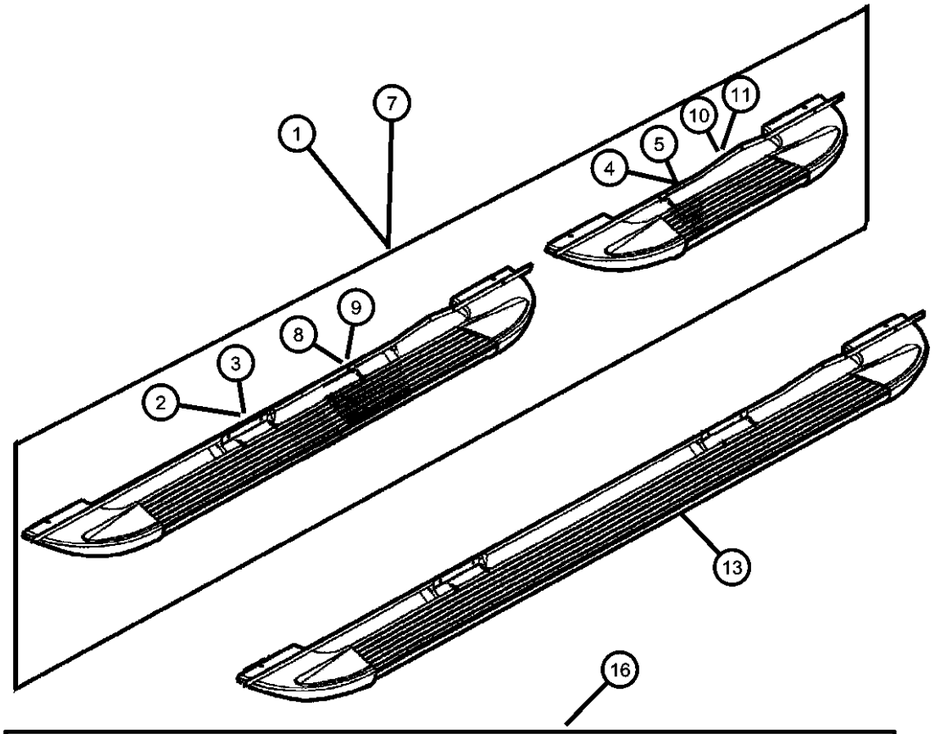

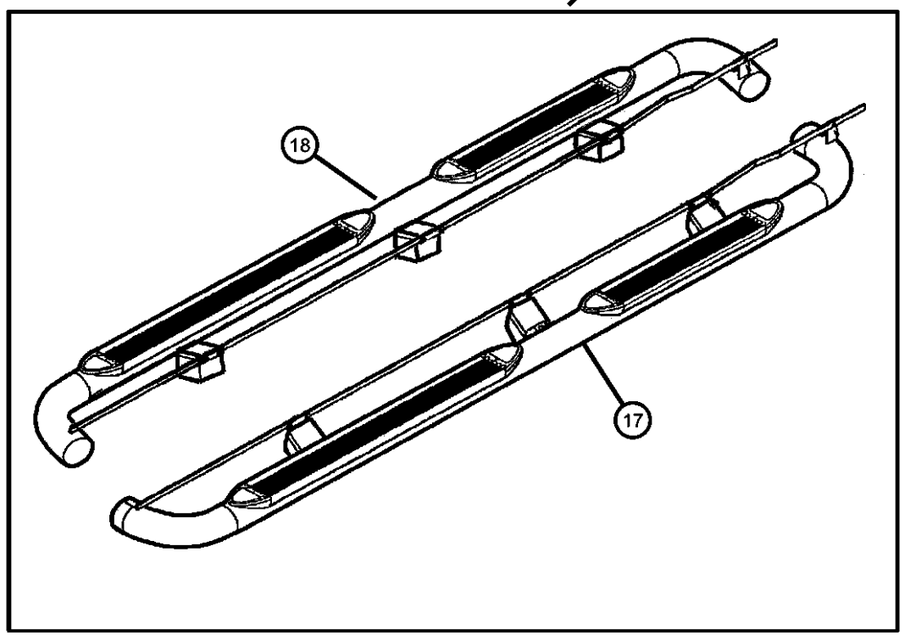

ITEM	PART NUMBER	QTY	LINE	SERIES	BODY	ENGINE	TRANS	TRIM	DESCRIPTION
11	05018245AA	1	1, 5		31				STEP KIT, Left Side, P.A.R., Driver, Bed Section
-12	05010603AA	1							HARDWARE KIT, Running Board
13									STEP KIT, Truck - Full, Quad Cab
	82205050	1	1, 5		84				Black, [PX8]
	82205051	1	1, 5		84				Bright White, [PW7]
	82205052	1	1, 5		84				Light Driftwood, [PFK]
	82205053	1	1, 5		84				Flame Red, [PR4]
	82205054	1	1, 5		84				Forest Green, [PG8]
	82205055	1	1, 5		84				Intense Blue, [PB3]
	82205057	1	1, 5		84				Patroit Blue, [PB7]
	82205058	1	1, 5		84				Dark Garnet Red, [PVR]
	82205059	1	1, 5		84				Sierra Bronze, [PTL]
	82205060	1	1, 5		84				Amber Fire, [PV3]
	82205462	1	1, 5		84				Aluminum Finish
	82205463	1	1, 5		84				Chrome Finish
-14									STEP, Right Side
	05018378AA	1	1, 5		84				Aluminum Finish
	05018380AA	1	1, 5		84				Chrome Finish
	05018382AA	1	1, 5		84				P.A.R.
-15									STEP, Left Side
	05018379AA	1	1, 5		84				Aluminum Finish
	05018381AA	1	1, 5		84				Chrome Finish
	05018383AA	1	1, 5		84				P.A.R.
16									STEP KIT, Tubular Side, Driver & Passenger Complete
	82202733	1	1, 5		61				Black Aluminum, Metal Step Pad
	82202735	1	1, 5		61				Silver Aluminum, Metal Step Pad
	82202736	1	1, 5		31				Black Aluminum, Metal Step Pad
	82202737	1	1, 5		31				Black Steel, Metal Step Pad
	82202738	1			31				Silver Aluminum, Metal Step Pad
	82203073	1	1, 5		61				Chrome Steel, Metal Step Pad
	82203074	1	1, 5		31				Chrome Steel, Metal Step Pad

DAKOTA (AN)

SERIES	LINE	BODY	ENGINE	TRANSMISSION
L = Quad Cab L = Regular Cab L = Club Cab	1 = Dakota 2WD 5 = Dakota 4WD	31 = CLUB CAB 2-DR 6.5 FT BOX 61 = REG CAB 6.5 FT BOX 84 = CREW CAB 4-DR W.B.1	EPO = 2.5L 4 Cyl. EHO = 3.9L 6 Cyl. EMO = 5.9L 8 Cyl. EVO = 4.7L Magnum EHC = 3.9L SMPI V6 EML = 5.9L V8 MPI Engine EPE = 2.5L POWER TECH I-4 Cyl. EVA = 4.7L V8 MPI	DDC = TRANSMISSION - 5-SPEED HD MANUAL DG4 = TRANSMISSION-MULTI-SPEED AUTO, 45RFE DGK = TRANSMISSION - 4-SPD. AUTOMATIC,42RE DGT = TRANSMISSION - 4-SPD. AUTOMATIC,46RE DGO = AUTO. TRANS.

Side Steps, Molded and Tubular
Figure 1-440

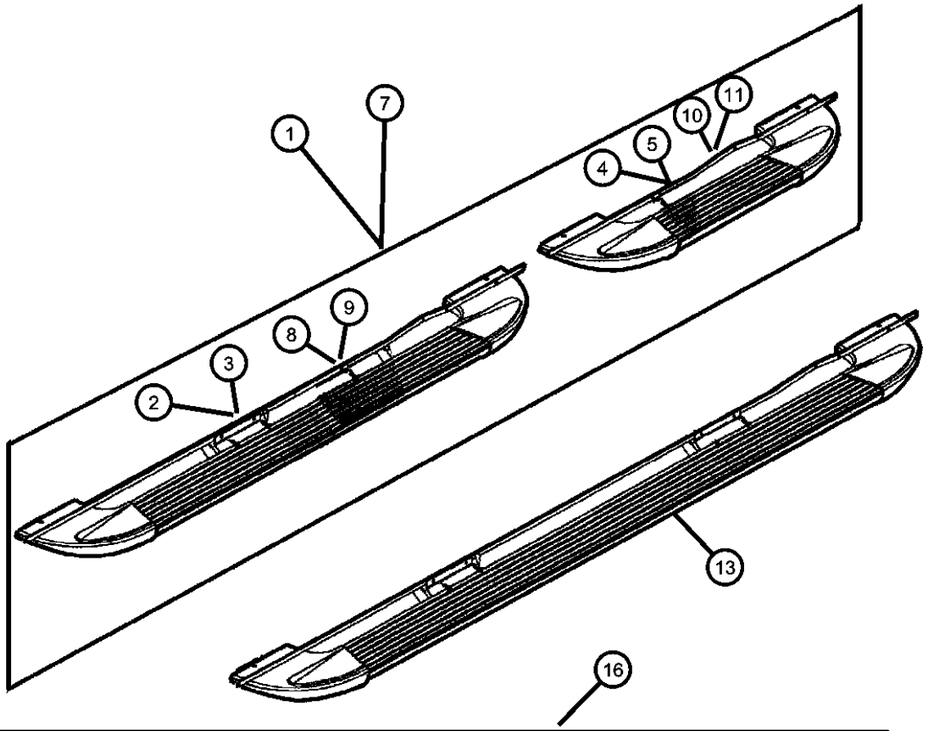

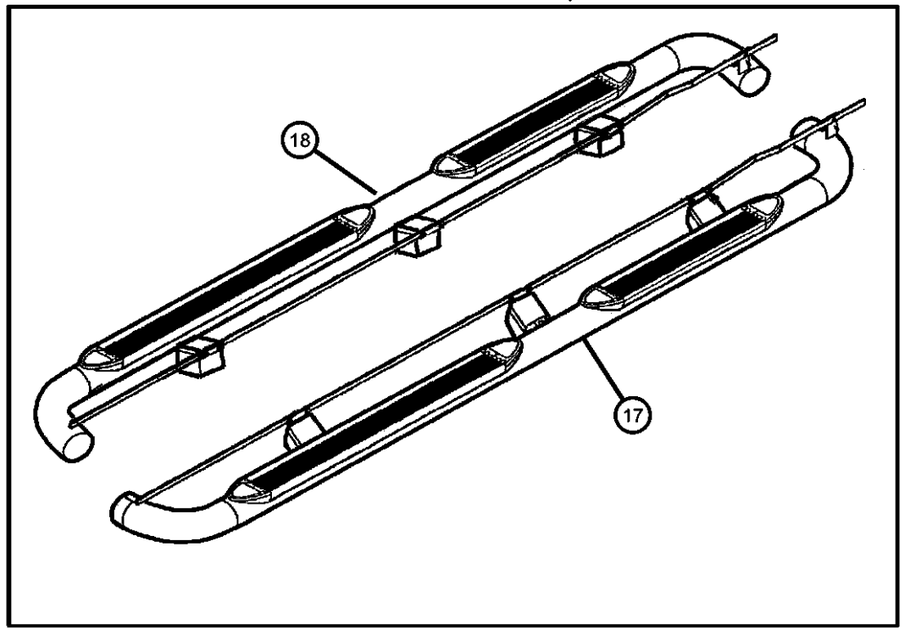

ITEM	PART NUMBER	QTY	LINE	SERIES	BODY	ENGINE	TRANS	TRIM	DESCRIPTION
	82205063	1	1, 5		84				Black Steel, Plastic Step Pad
	82205065	1	1, 5		84				Silver Aluminum, Plastic Step Pad
	82205066	1	1, 5		84				Chrome Steel, Plastic Step Pad
17									STEP KIT, Tubular Side, Driver Side
	05018327AA	1	1, 5		31				Chrome Steel, Metal Step Pad
	05018333AA	1	1, 5		84				Black Steel, Plastic Step Pad
	05018335AA	1	1, 5		84				Silver Aluminum, Plastic Step Pad
	05018337AA	1	1, 5		84				Chrome Steel, Plastic Step Pad
	05018643AA	1	1, 5		61				Black Aluminum, Metal Step Pad
	05018645AA	1	1, 5		61				Silver Aluminum, Metal Step Pad
	05018647AA	1	1, 5		31				Black Aluminum, Metal Step Pad
	05018649AA	1			31				Silver Aluminum, Metal Step Pad
	05018651AA	1	1, 5		31				Black Steel, Metal Step Pad
	05018653AA	1	1, 5		61				Chrome Steel, Metal Step Pad
18									STEP KIT, Tubular Side, Passenger Side
	05018234AA	1	1, 5		31				Chrome Steel, Metal Step Pad
	05018332AA	1	1, 5		84				Black Steel, Plastic Step Pad
	05018334AA	1	1, 5		84				Silver Aluminum, Plastic Step Pad
	05018336AA	1	1, 5		84				Chrome Steel, Plastic Step Pad
	05018642AA	1	1, 5		61				Black Aluminum, Metal Step Pad
	05018644AA	1	1, 5		61				Silver Aluminum, Metal Step Pad
	05018646AA	1	1, 5		31				Black Aluminum, Metal Step Pad
	05018648AA	1			31				Silver Aluminum, Metal Step Pad
	05018650AA	1	1, 5		31				Black Steel, Metal Step Pad
	05018652AA	1	1, 5		61				Chrome Steel, Metal Step Pad

DAKOTA (AN)

SERIES	LINE	BODY	ENGINE	TRANSMISSION
L = Quad Cab L = Regular Cab L = Club Cab	1 = Dakota 2WD 5 = Dakota 4WD	31 = CLUB CAB 2-DR 6.5 FT BOX 61 = REG CAB 6.5 FT BOX 84 = CREW CAB 4-DR W.B.1	EPO = 2.5L 4 Cyl. EHO = 3.9L 6 Cyl. EMO = 5.9L 8 Cyl. EVO = 4.7L Magnum EHC = 3.9L SMPI V6 EML = 5.9L V8 MPI Engine EPE = 2.5L POWER TECH I-4 Cyl. EVA = 4.7L V8 MPI	DDC = TRANSMISSION - 5-SPEED HD MANUAL DG4 = TRANSMISSION-MULTI-SPEED AUTO, 45RFE DGK = TRANSMISSION - 4-SPD. AUTOMATIC,42RE DGT = TRANSMISSION - 4-SPD. AUTOMATIC,46RE DGO = AUTO. TRANS.

Bedliner, Trays and Mats
Figure 1-510

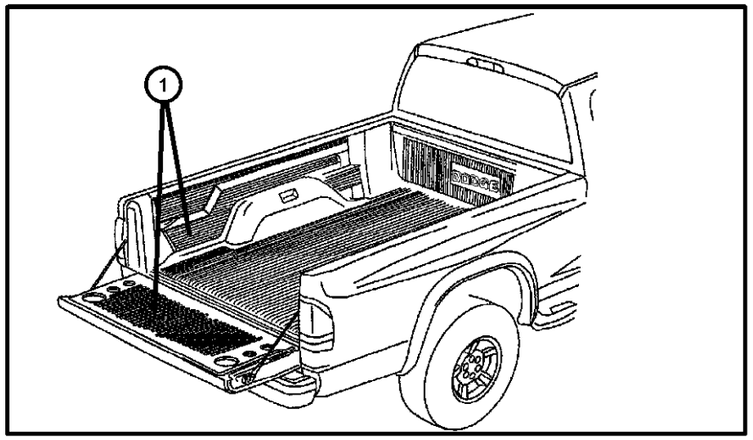

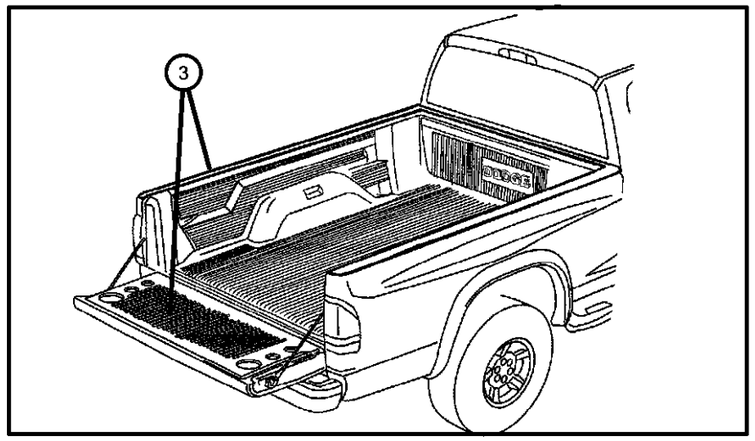

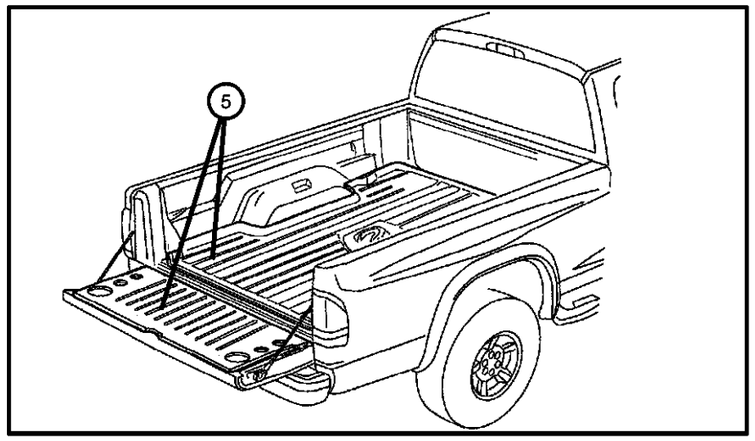

ITEM	PART NUMBER	QTY	LINE	SERIES	BODY	ENGINE	TRANS	TRIM	DESCRIPTION
1									BEDLINER KIT, Under Rail
	82203894	1	1, 5		31, 61				6.5‘ Box
	82205028	1							5.25‘ Box
-2									INSTALL KIT, Bedliner - Under Rail
	05011299AA	1							6.5‘ Box
	05018232AA	1							5.25‘ Box
3	82203896	1	1, 5		31, 61				BEDLINER KIT, Over Rail, 6.5‘ Box
-4	05011300AA	1							INSTALL KIT, Bedliner - Over Rail
5	82205003	1	1, 5		31, 61				TRAY, Molded Cargo, Black, w/2.0‘ Wall and Tailgate Cover
-6	05018121AA	1	1, 5		31, 61				HARDWARE KIT, Bed tray
-7									MAT KIT, Bed - Exterior
	82204301	1	1, 5		31, 61				Tailgate and Bed Mat w/‘Dodge‘ Logo
	82204607	1	1, 5		84				Tailgate and Bed Mat w/‘Ram‘ Logo
-8	82203899	1	1, 5		31, 61, 84				COVER KIT, Tailgate-Molded
-9	05011297AA	1							INSTALL KIT, Bedliner - Under Rail

DAKOTA (AN)

SERIES	LINE	BODY	ENGINE	TRANSMISSION
L = Quad Cab	1 = Dakota 2WD	31 = CLUB CAB 2-DR 6.5 FT BOX	EPO = 2.5L 4 Cyl.	DDC = TRANSMISSION - 5-SPEED HD MANUAL
L = Regular Cab	5 = Dakota 4WD	61 = REG CAB 6.5 FT BOX	EHO = 3.9L 6 Cyl.	DG4 = TRANSMISSION-MULTI-SPEED AUTO, 45RFE
L = Club Cab		84 = CREW CAB 4-DR W.B.1	EMO = 5.9L 8 Cyl.	DGK = TRANSMISSION - 4-SPD. AUTOMATIC,42RE
			EVO = 4.7L Magnum	DGT = TRANSMISSION - 4-SPD. AUTOMATIC,46RE
			EHC = 3.9L SMPI V6	DGO = AUTO. TRANS.
			EML = 5.9L V8 MPI Engine	
			EPE = 2.5L POWER TECH I-4 Cyl.	
			EVA = 4.7L V8 MPI	

Divider Kit - Cargo
Figure 1-520

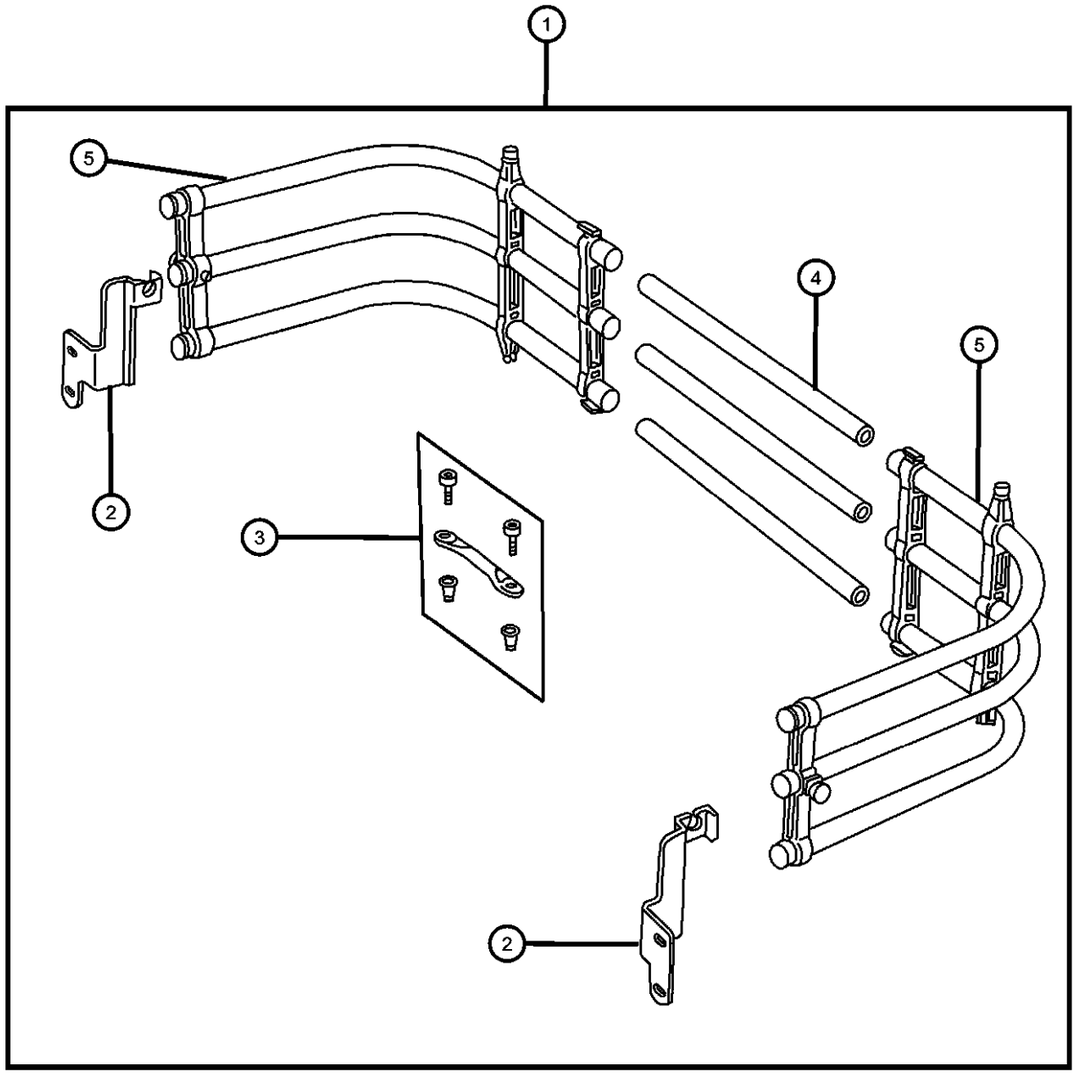

ITEM	PART NUMBER	QTY	LINE	SERIES	BODY	ENGINE	TRANS	TRIM	DESCRIPTION
1	82205461	1	1, 5		84				DIVIDER KIT, Cargo
2									BRACKET, Mounting
	05018978AA	1	1, 5		84				Right
	05018979AA	1	1, 5		84				Left
3	05018980AA	1	1, 5		84				HARDWARE KIT, Mounting, Consists of: 2 Bolts, 2 Nutserts, 1 Retention Bracket.
4	05018981AA	1	1, 5		84				TUBE, Bed Extender
5	05018981AA	1							TUBE, Bed Extender, Serviced in Assembly, (NOT SERVICED)

DAKOTA (AN)

SERIES	LINE	BODY	ENGINE	TRANSMISSION
L = Quad Cab L = Regular Cab L = Club Cab	1 = Dakota 2WD 5 = Dakota 4WD	31 = CLUB CAB 2-DR 6.5 FT BOX 61 = REG CAB 6.5 FT BOX 84 = CREW CAB 4-DR W.B.1	EPO = 2.5L 4 Cyl. EHO = 3.9L 6 Cyl. EMO = 5.9L 8 Cyl. EVO = 4.7L Magnum EHC = 3.9L SMPI V6 EML = 5.9L V8 MPI Engine EPE = 2.5L POWER TECH I-4 Cyl. EVA = 4.7L V8 MPI	DDC = TRANSMISSION - 5-SPEED HD MANUAL DG4 = TRANSMISSION-MULTI-SPEED AUTO, 45RFE DGK = TRANSMISSION - 4-SPD. AUTOMATIC,42RE DGT = TRANSMISSION - 4-SPD. AUTOMATIC,46RE DGO = AUTO. TRANS.

Shield Kit - Air Front
Figure 1-530

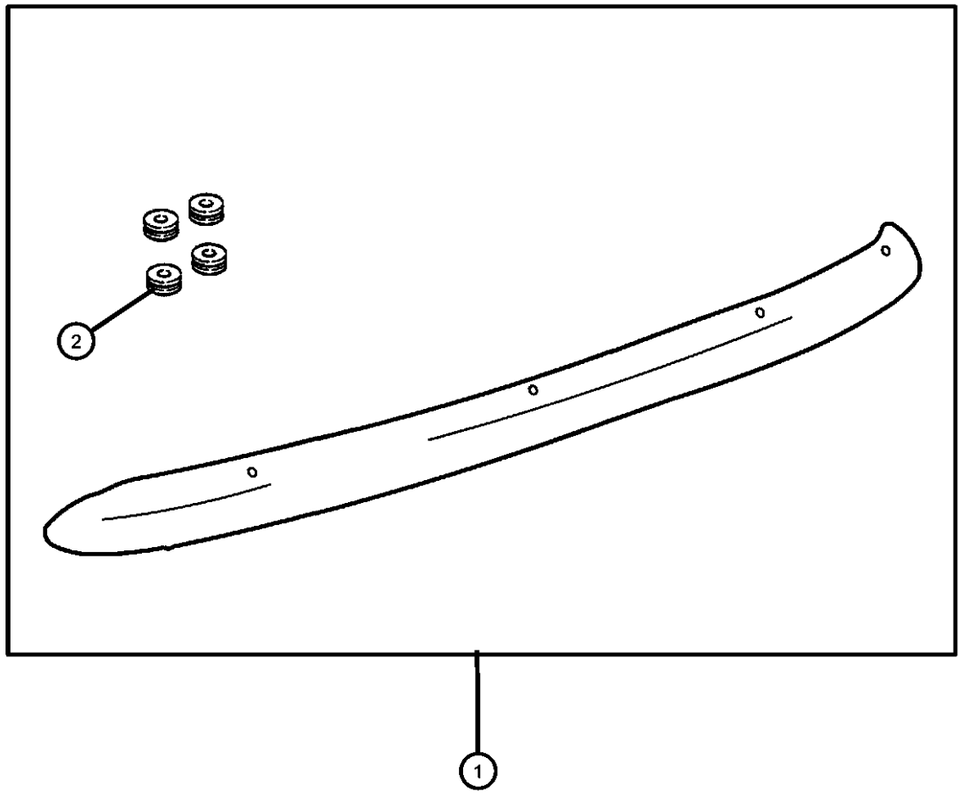

ITEM	PART NUMBER	QTY	LINE	SERIES	BODY	ENGINE	TRANS	TRIM	DESCRIPTION
NOTE: Shield Kit - Color Smoke, Material Lexan. Ram's Head Logo									
1	82202754	1	1, 5		31, 61, 84				SHIELD KIT, Air - Front
2	05014754AA	1	1, 5		31, 61, 84				SPACER, Air Deflector

DAKOTA (AN)

SERIES	LINE	BODY	ENGINE	TRANSMISSION
L = Quad Cab L = Regular Cab L = Club Cab	1 = Dakota 2WD 5 = Dakota 4WD	31 = CLUB CAB 2-DR 6.5 FT BOX 61 = REG CAB 6.5 FT BOX 84 = CREW CAB 4-DR W.B.1	EPO = 2.5L 4 Cyl. EHO = 3.9L 6 Cyl. EMO = 5.9L 8 Cyl. EVO = 4.7L Magnum EHC = 3.9L SMPI V6 EML = 5.9L V8 MPI Engine EPE = 2.5L POWER TECH I-4 Cyl. EVA = 4.7L V8 MPI	DDC = TRANSMISSION - 5-SPEED HD MANUAL DG4 = TRANSMISSION-MULTI-SPEED AUTO, 45RFE DGK = TRANSMISSION - 4-SPD. AUTOMATIC,42RE DGT = TRANSMISSION - 4-SPD. AUTOMATIC,46RE DGO = AUTO. TRANS.

Heater Kit - Engine Block
Figure 1-610

ITEM	PART NUMBER	QTY	LINE	SERIES	BODY	ENGINE	TRANS	TRIM	DESCRIPTION
1	82203640	1	1, 5		31, 61, 84				HEATER PACKAGE, Engine Block
2	56027117	1	1, 5		31, 61, 84				CORD, Engine Block Heater
3	56008876	1	1, 5		31, 61, 84				STRAP, Tie
4	56008876	1							HEATER, Engine Block, (NOT SERVICED)

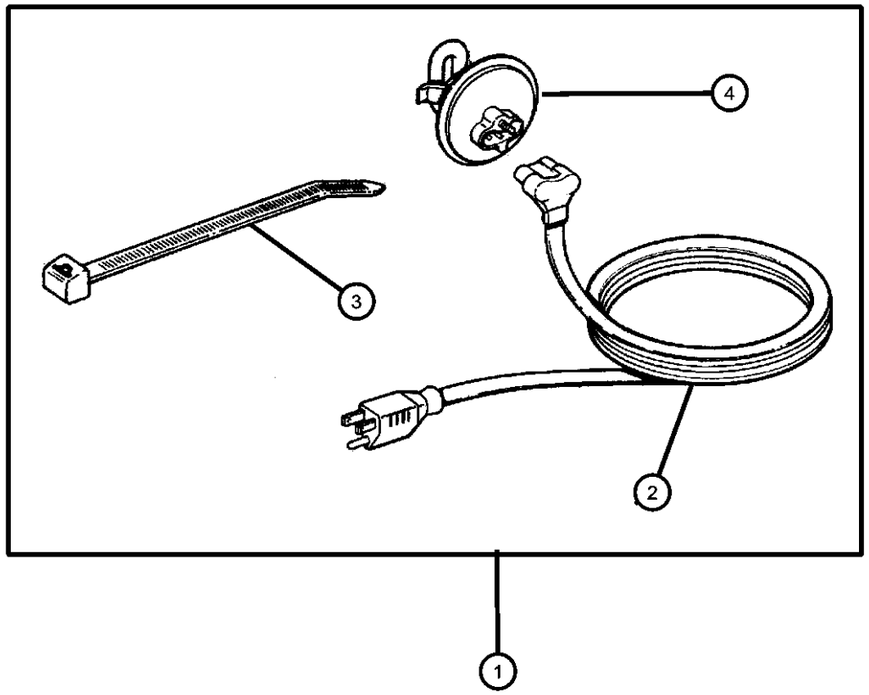

DAKOTA (AN)

SERIES	LINE	BODY	ENGINE	TRANSMISSION
L = Quad Cab L = Regular Cab L = Club Cab	1 = Dakota 2WD 5 = Dakota 4WD	31 = CLUB CAB 2-DR 6.5 FT BOX 61 = REG CAB 6.5 FT BOX 84 = CREW CAB 4-DR W.B.1	EPO = 2.5L 4 Cyl. EHO = 3.9L 6 Cyl. EMO = 5.9L 8 Cyl. EVO = 4.7L Magnum EHC = 3.9L SMPI V6 EML = 5.9L V8 MPI Engine EPE = 2.5L POWER TECH I-4 Cyl. EVA = 4.7L V8 MPI	DDC = TRANSMISSION - 5-SPEED HD MANUAL DG4 = TRANSMISSION-MULTI-SPEED AUTO, 45RFE DGK = TRANSMISSION - 4-SPD. AUTOMATIC,42RE DGT = TRANSMISSION - 4-SPD. AUTOMATIC,46RE DGO = AUTO. TRANS.

Light Kit - Off Road
Figure 1-620

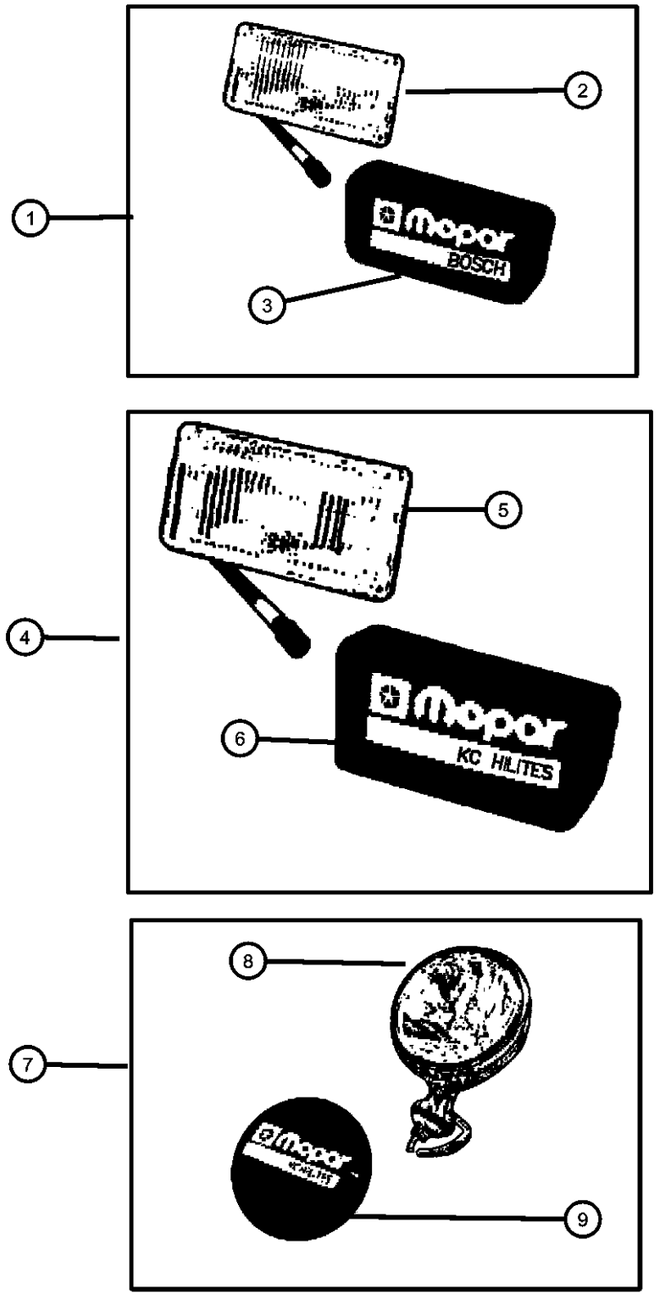

ITEM	PART NUMBER	QTY	LINE	SERIES	BODY	ENGINE	TRANS	TRIM	DESCRIPTION
NOTE: 82204005 contains two of 82202528									
1									LIGHT KIT, Off Road, 5 x 7 Inch
	82201252	1	1, 5		31, 61, 84				Black Plastic
	82201775	1	1, 5		31, 61, 84				Chrome
	82201776	1	1, 5		31, 61, 84				Black Chrome
2	04720330	1							LENS, Fog Lamp, Off Road
3	04720332	1							COVER, Fog Lamp, Off Road
4									LIGHT KIT, Off Road, 6 x 9 Inch
	82203691	1	1, 5		31, 61, 84				Black
	82203692	1	1, 5		31, 61, 84				Chrome
5	04720316	1	1, 5		31, 61, 84				LENS, Fog Lamp
6	04720317	1	1, 5		31, 61, 84				COVER, Fog Lamp
7									LIGHT KIT, Off Road, 6 Inch Round
	82201777	1	1, 5		31, 61, 84				Black Chrome
	82201778	1	1, 5		31, 61, 84				Bright Chrome
8	04720333	1							LENS, Fog Lamp, Off Road
9	04720327	1							COVER, Off Road Lamp, Off Road
-10	82204005	1	1, 5		31, 61, 84				LIGHT KIT, Off Road, 6 Inch Round, Black, Light Bar Mount
-11	82202528	1	1, 5		31, 61, 84				LIGHT KIT, Off Road, 6 Inch Round, Black, Light Bar Mount
-12	82204503	1	1, 5		62				COVER KIT, Light, Ram Logo
-13	04419298	1							BULB, 100 Watt
-14	L00H355W	1	1, 5		31, 61, 84				BULB, Fog Lamp, H-3 55 WATT

DAKOTA (AN)

SERIES	LINE	BODY	ENGINE	TRANSMISSION
L = Quad Cab L = Regular Cab L = Club Cab	1 = Dakota 2WD 5 = Dakota 4WD	31 = CLUB CAB 2-DR 6.5 FT BOX 61 = REG CAB 6.5 FT BOX 84 = CREW CAB 4-DR W.B.1	EPO = 2.5L 4 Cyl. EHO = 3.9L 6 Cyl. EMO = 5.9L 8 Cyl. EVO = 4.7L Magnum EHC = 3.9L SMPI V6 EML = 5.9L V8 MPI Engine EPE = 2.5L POWER TECH I-4 Cyl. EVA = 4.7L V8 MPI	DDC = TRANSMISSION - 5-SPEED HD MANUAL DG4 = TRANSMISSION-MULTI-SPEED AUTO, 45RFE DGK = TRANSMISSION - 4-SPD. AUTOMATIC,42RE DGT = TRANSMISSION - 4-SPD. AUTOMATIC,46RE DGO = AUTO. TRANS.

Light Kit - Fog
Figure 1-630

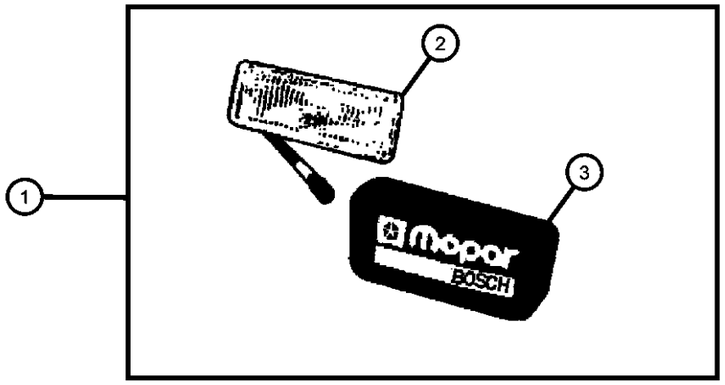

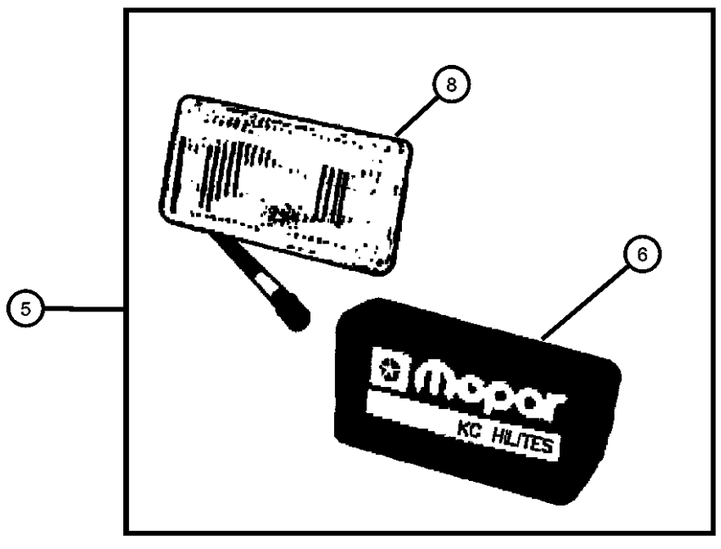

ITEM	PART NUMBER	QTY	LINE	SERIES	BODY	ENGINE	TRANS	TRIM	DESCRIPTION
NOTE: Light Packages - use 55 watt Bulb only. Complete kit including lights for mounting on a Brush Guard.									
1	82400594	1	1, 5		31, 61, 84				LIGHT KIT, Fog, 2.5 x5.5‘, Black Plastic
2	04713332	1							LIGHT, Fog
3	04713333	1							COVER, Fog Lamp
-4	04728646	1							BULB PACKAGE, 55 Watt
5	82201229	1	1, 5		31, 61, 84				LIGHT KIT, Fog, 5 x 7‘, Black Chrome
6	04720332	1							COVER, Fog Lamp
-7	04728646	1							BULB PACKAGE, 55 Watt
8	04720329	1							LENS, Fog Lamp

DAKOTA (AN)

SERIES	LINE	BODY	ENGINE	TRANSMISSION
L = Quad Cab L = Regular Cab L = Club Cab	1 = Dakota 2WD 5 = Dakota 4WD	31 = CLUB CAB 2-DR 6.5 FT BOX 61 = REG CAB 6.5 FT BOX 84 = CREW CAB 4-DR W.B.1	EPO = 2.5L 4 Cyl. EHO = 3.9L 6 Cyl. EMO = 5.9L 8 Cyl. EVO = 4.7L Magnum EHC = 3.9L SMPI V6 EML = 5.9L V8 MPI Engine EPE = 2.5L POWER TECH I-4 Cyl. EVA = 4.7L V8 MPI	DDC = TRANSMISSION - 5-SPEED HD MANUAL DG4 = TRANSMISSION-MULTI-SPEED AUTO, 45RFE DGK = TRANSMISSION - 4-SPD. AUTOMATIC,42RE DGT = TRANSMISSION - 4-SPD. AUTOMATIC,46RE DGO = AUTO. TRANS.

Install Package - Off Road
Figure 1-632

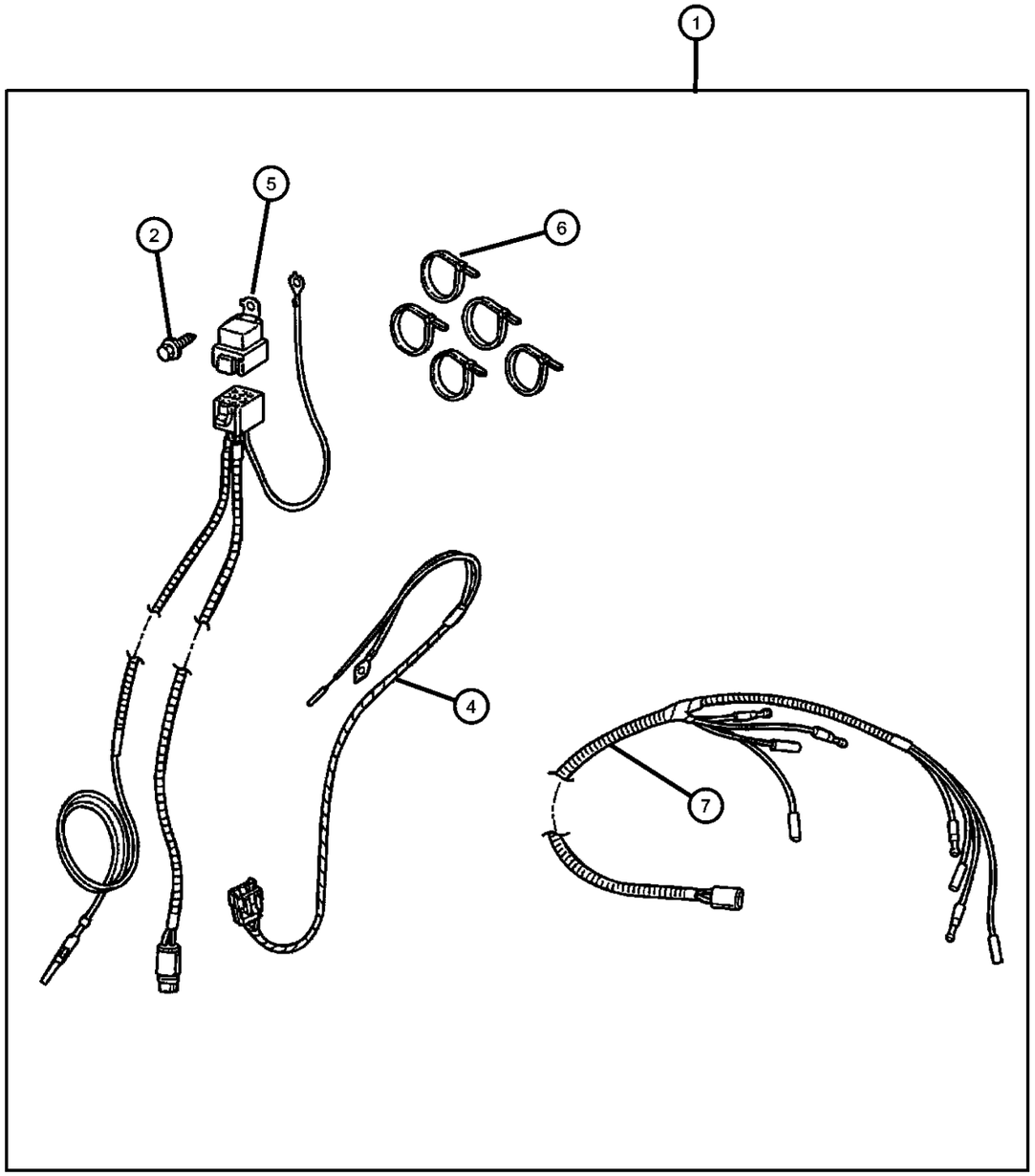

ITEM	PART NUMBER	QTY	LINE	SERIES	BODY	ENGINE	TRANS	TRIM	DESCRIPTION
1	82205343	1	1, 5		31, 61, 84				INSTALL PACKAGE, Off Road Light
2	00154552	1			31, 61, 84				SCREW, Hex Head, .190-16x.625
-3	05269430	1	1, 5		31, 61, 84				SWITCH, Fog Lamp
4	82203273	1	1, 5		31, 61, 84				WIRING, Fog Lamp
5	K4638271	1							RELAY
6	04641780	1	1, 5		31, 61, 84				STRAP, Tie
7	04641780	1							WIRING, Light Bar, (NOT SERVICED)

DAKOTA (AN)

SERIES	LINE	BODY	ENGINE	TRANSMISSION
L = Quad Cab	1 = Dakota 2WD	31 = CLUB CAB 2-DR 6.5 FT BOX	EPO = 2.5L 4 Cyl.	DDC = TRANSMISSION - 5-SPEED HD MANUAL
L = Regular Cab	5 = Dakota 4WD	61 = REG CAB 6.5 FT BOX	EHO = 3.9L 6 Cyl.	DG4 = TRANSMISSION-MULTI-SPEED AUTO, 45RFE
L = Club Cab		84 = CREW CAB 4-DR W.B.1	EMO = 5.9L 8 Cyl.	DGK = TRANSMISSION - 4-SPD. AUTOMATIC,42RE
			EVO = 4.7L Magnum	DGT = TRANSMISSION - 4-SPD. AUTOMATIC,46RE
			EHC = 3.9L SMPI V6	DGO = AUTO. TRANS.
			EML = 5.9L V8 MPI Engine	
			EPE = 2.5L POWER TECH I-4 Cyl.	
			EVA = 4.7L V8 MPI	

Install Package - Fog
Figure 1-634

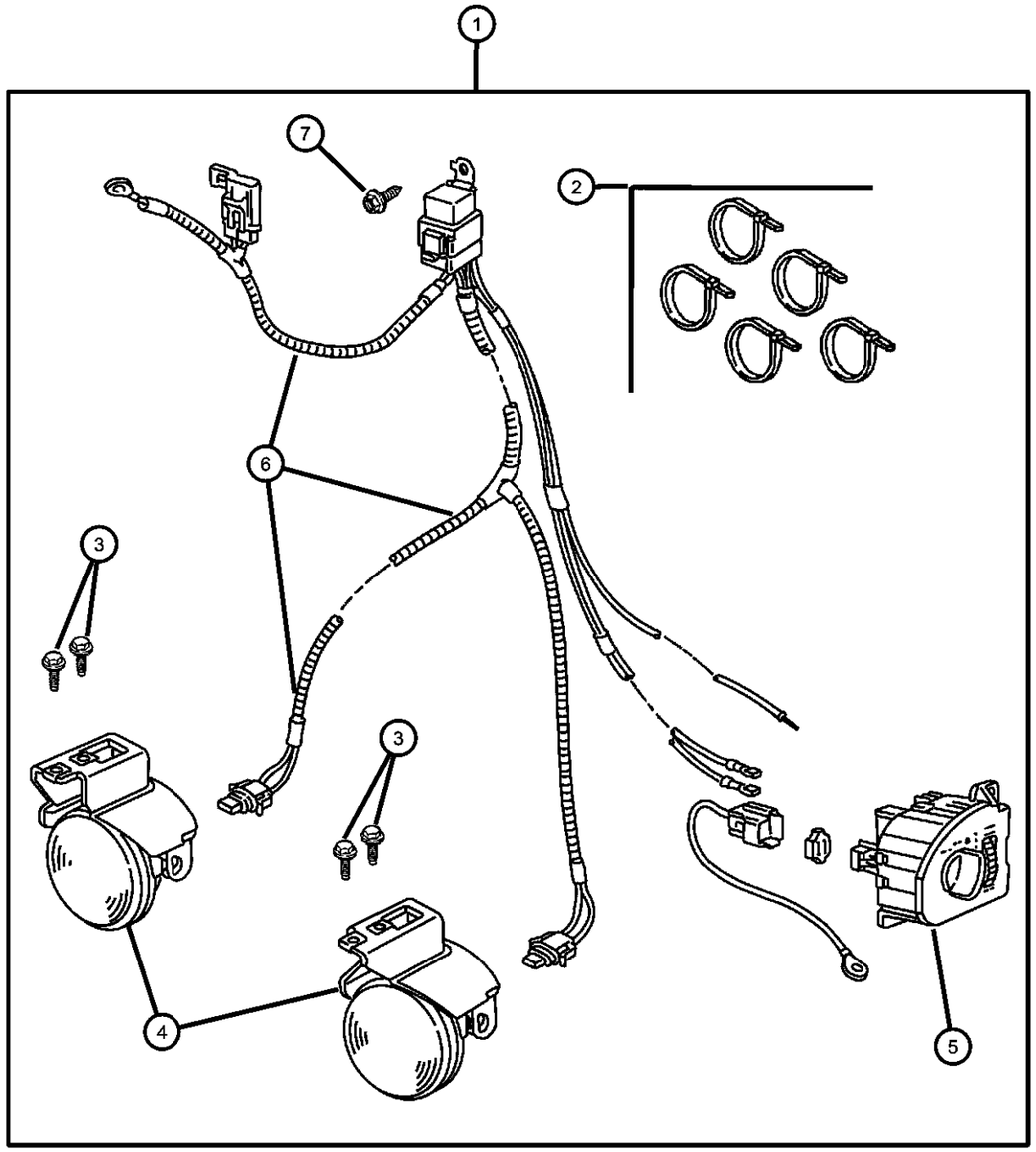

ITEM	PART NUMBER	QTY	LINE	SERIES	BODY	ENGINE	TRANS	TRIM	DESCRIPTION
NOTE: Complete Kit including the Lights.									
1									LIGHT PACKAGE, Fog
	82205658	1	1, 5		31, 61, 84				Without Cargo Lamps
	82205659	1							With Cargo Lamp
2	04641780	1	1, 5		31, 61, 84				STRAP, Tie
3	06101818	1	1, 5		31, 61, 84				SCREW, Quantity of four
4									LAMP, Fog
	55077266AC	1							Right
	55077267AC	1							Left
5									SWITCH, Headlamp
	56021675AE	1							With Cargo Lamps
	56021676AE	1	1, 5		31, 61, 84				Without Cargo Lamps
6	82205247	1	1, 5		31, 61, 84				WIRING, Fog/Driving Light
7	00154552	1			31, 61, 84				SCREW, Hex Head, .190-16x.625

DAKOTA (AN)

SERIES	LINE	BODY	ENGINE	TRANSMISSION
L = Quad Cab L = Regular Cab L = Club Cab	1 = Dakota 2WD 5 = Dakota 4WD	31 = CLUB CAB 2-DR 6.5 FT BOX 61 = REG CAB 6.5 FT BOX 84 = CREW CAB 4-DR W.B.1	EPO = 2.5L 4 Cyl. EHO = 3.9L 6 Cyl. EMO = 5.9L 8 Cyl. EVO = 4.7L Magnum EHC = 3.9L SMPI V6 EML = 5.9L V8 MPI Engine EPE = 2.5L POWER TECH I-4 Cyl. EVA = 4.7L V8 MPI	DDC = TRANSMISSION - 5-SPEED HD MANUAL DG4 = TRANSMISSION-MULTI-SPEED AUTO, 45RFE DGK = TRANSMISSION - 4-SPD. AUTOMATIC,42RE DGT = TRANSMISSION - 4-SPD. AUTOMATIC,46RE DGO = AUTO. TRANS.

Alarm, EVS II Security Plus
Figure 1-910

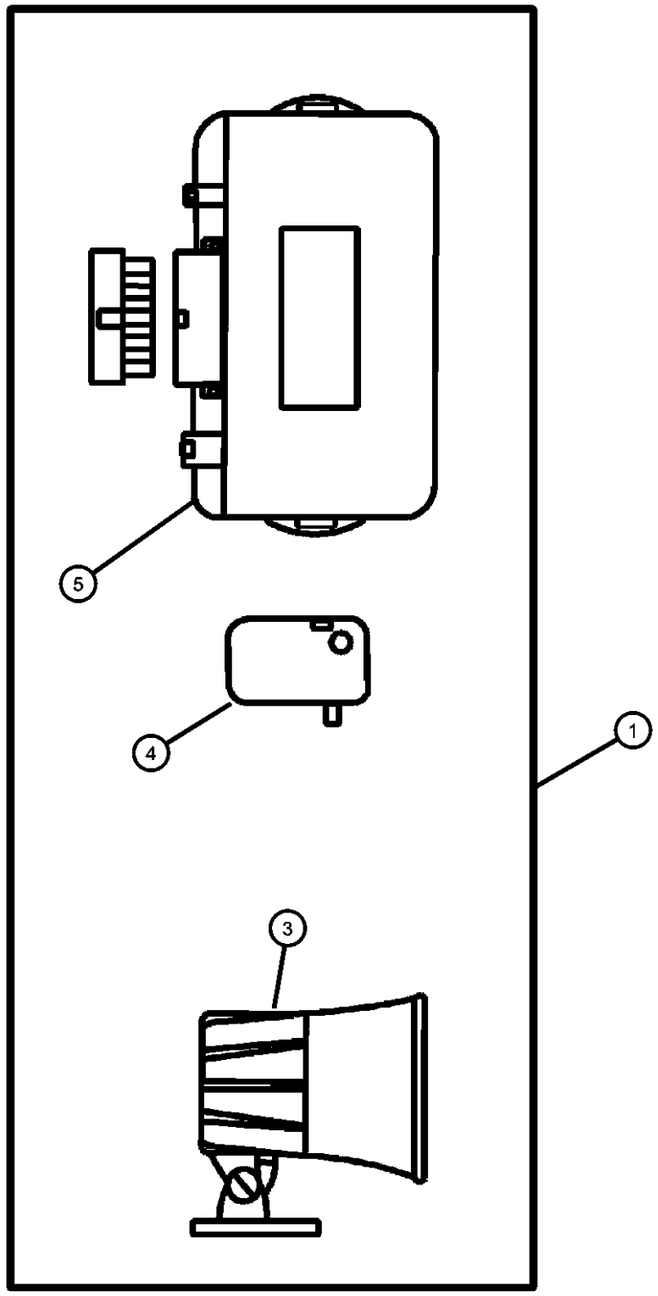

ITEM	PART NUMBER	QTY	LINE	SERIES	BODY	ENGINE	TRANS	TRIM	DESCRIPTION
1	82204268	1	1, 5		31, 61, 84				MODULE, Security Alarm, Plus System, For Vehicles With Original Equipment Keyless Entry
-2	82205834	1	1, 5		31, 61, 84				WIRING KIT, Alarm Security Plus
3	82203198	1	1, 5		31, 61, 84				SIREN, Alarm
4	04886261AA	1	1, 5		31, 61, 84				SENSOR, Shock, With Connector
5	05011619AA	1	1, 5		31, 61, 84				MODULE, Security Alarm

DAKOTA (AN)

SERIES	LINE	BODY	ENGINE	TRANSMISSION
L = Quad Cab L = Regular Cab L = Club Cab	1 = Dakota 2WD 5 = Dakota 4WD	31 = CLUB CAB 2-DR 6.5 FT BOX 61 = REG CAB 6.5 FT BOX 84 = CREW CAB 4-DR W.B.1	EPO = 2.5L 4 Cyl. EHO = 3.9L 6 Cyl. EMO = 5.9L 8 Cyl. EVO = 4.7L Magnum EHC = 3.9L SMPI V6 EML = 5.9L V8 MPI Engine EPE = 2.5L POWER TECH I-4 Cyl. EVA = 4.7L V8 MPI	DDC = TRANSMISSION - 5-SPEED HD MANUAL DG4 = TRANSMISSION-MULTI-SPEED AUTO, 45RFE DGK = TRANSMISSION - 4-SPD. AUTOMATIC,42RE DGT = TRANSMISSION - 4-SPD. AUTOMATIC,46RE DGO = AUTO. TRANS.

AR = use ase required - = Non illustrrated part

Winch Kit - Power
Figure 1-1010

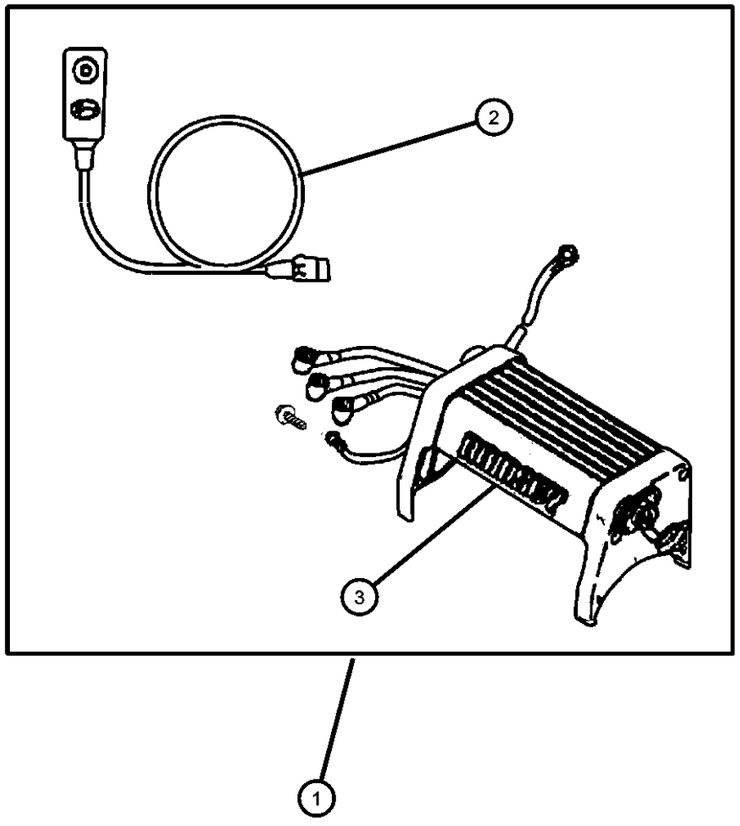

ITEM	PART NUMBER	QTY	LINE	SERIES	BODY	ENGINE	TRANS	TRIM	DESCRIPTION
NOTE: Use Mounting Kit 82202762									
1									WINCH KIT, Power
	82204129	1	5		31, 61, 84				9000# - 95' Cable
	82204130	1	5		31, 61, 84				6000#
	82204131	1	5		31, 61, 84				8000#
	82204134	1	5		31, 61, 84				8000# with Ground Wire
2	05018221AA	1	5		31, 61, 84				CABLE KIT, Winch
3									SOLENOID, Winch
	05018363AA	1	5		31, 61, 84				
	05018366AA	1	5		31, 61, 84				Use with 8000HX

DAKOTA (AN)

SERIES	LINE	BODY	ENGINE	TRANSMISSION
L = Quad Cab	1 = Dakota 2WD	31 = CLUB CAB 2-DR 6.5 FT BOX	EPO = 2.5L 4 Cyl.	DDC = TRANSMISSION - 5-SPEED HD MANUAL
L = Regular Cab	5 = Dakota 4WD	61 = REG CAB 6.5 FT BOX	EHO = 3.9L 6 Cyl.	DG4 = TRANSMISSION-MULTI-SPEED AUTO, 45RFE
L = Club Cab		84 = CREW CAB 4-DR W.B.1	EMO = 5.9L 8 Cyl.	DGK = TRANSMISSION - 4-SPD. AUTOMATIC,42RE
			EVO = 4.7L Magnum	DGT = TRANSMISSION - 4-SPD. AUTOMATIC,46RE
			EHC = 3.9L SMPI V6	DGO = AUTO. TRANS.
			EML = 5.9L V8 MPI Engine	
			EPE = 2.5L POWER TECH I-4 Cyl.	
			EVA = 4.7L V8 MPI	

Group - 2

Front Suspension & Drive

002-100 Front Suspension 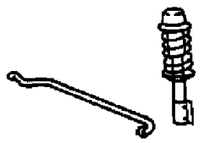	**002-200** Front Axle Drive Shafts 	**002-300** Front Axle Housing 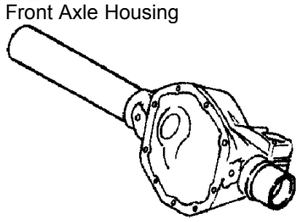	**002-400** Front Axle Assembly 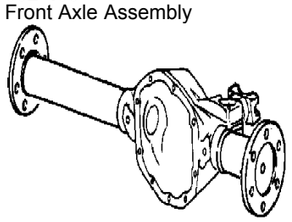
002-600 Front Axle Differential 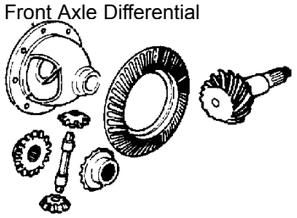	**002-800** Front Axle Skid Plate 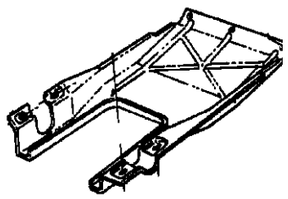		

Group - 2 Front Suspension & Drive

Illustration Title — Group-Fig. No.

Front Suspension
Suspension,Front,Control Arms,Springs,Shocks,Knuckles-AN 1 ..... Fig. 2 - 110
Stabilizer Bar,Front-AN 1 ..... Fig. 2 - 120
Suspension,Front,Control Arms,Shocks,Knuckles-AN 5 ..... Fig. 2 - 130
Stabilizer Bar and Torsion Bar,Front-AN 5 ..... Fig. 2 - 140

Front Axle Drive Shafts
Shaft.Front Drive Axle ..... Fig. 2 - 210

Front Axle Housing
Housing,Front Axle ..... Fig. 2 - 310

Front Axle Assembly
Axle Assembly,Front ..... Fig. 2 - 410

Front Axle Differential
Differential,Front Axle ..... Fig. 2 - 610

Front Axle Skid Plate
Skid Plate,Front Axle ..... Fig. 2 - 810

Suspension,Front,Control Arms,Springs,Shocks,Knuckles-AN 1
Figure 2-110

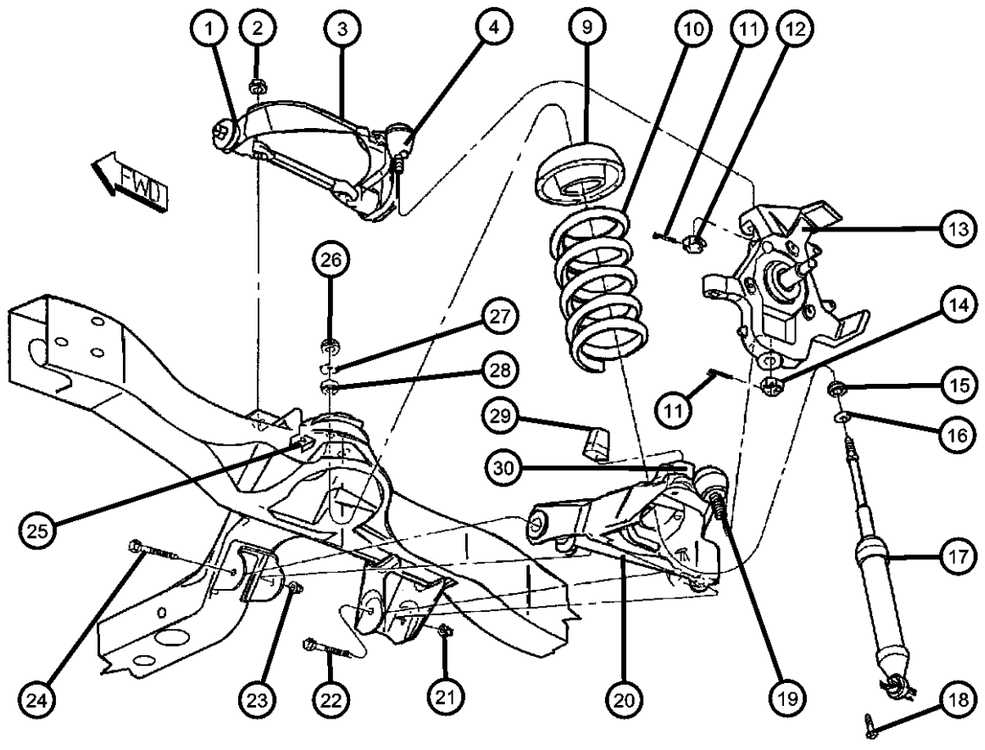

ITEM	PART NUMBER	QTY	LINE	SERIES	BODY	ENGINE	TRANS	TRIM	DESCRIPTION
NOTES:UCA=Upper Control Arm—LCA=Lower Control Arm—Check VIN Number for proper Sales Code on Front Springs.—EP0=All 2.5L 4 Cylin									
1	52037673	2	1						BUSHING, Control ArmUpper
2	06036048AA	4	1						NUT, Hex Lock, .562 - 18, Pivot Bar Mounting Bolt, Upper Control Arm
3									ARM, Upper Control, Front
	52106160AC	1	1						Complete Assembly, Right
	52106161AB	1	1						Complete Assembly, Left
4	05104816AA	1	1						BALL JOINT PACKAGE, Upper Control ArmRight or Left
-5	06503320	2	1						NUT, Hex Lock, M15x2, Pivot, Upper Control Arm
-6	52038241	2	1						WASHER, Control Arm Shaft, Outer, Upper Front
-7	52038745	1	1						BUMPER, Suspension JounceUpper Control Arm
-8	06504317	1	1						NUT, Hex, Jounce Bumper Mounting, Upper Control Arm
9	52037718	2	1						ISOLATOR, SpringUpper
10									SPRING, Front Coil
	52039198	1	1						ZBG,ZPG
	52039199	1	1						ZBH,ZPH
	52039200	1	1						ZBJ,ZPJ
	52039201	1	1						ZBK,ZPK
	52039242	1	1						ZAC,ZNC
	52039243	1	1						ZAD,ZND
	52039244	1	1						ZAE,ZNE
	52039245	1	1						ZAF,ZNF
	52039246	1	1						ZAG,ZNG
	52039247	1	1						ZAH,ZNH
	52039248	1	1						ZAJ,ZNJ
	52039249	1	1						ZAK,ZNK
	52106196AA	1	1						ZBE,ZPE
	52106197AA	1	1						ZBF,ZPF
	52106436AA	1	1		31, 61				ZCA,ZRA
11	00120123	2							PIN, Cotter, UCA and LCA Ball Joint Stud

DAKOTA (AN)

SERIES	LINE	BODY	ENGINE	TRANSMISSION
L = Quad Cab L = Regular Cab L = Club Cab	1 = Dakota 2WD 5 = Dakota 4WD	31 = CLUB CAB 2-DR 6.5 FT BOX 61 = REG CAB 6.5 FT BOX 84 = CREW CAB 4-DR W.B.1	EPO = 2.5L 4 Cyl. EHO = 3.9L 6 Cyl. EMO = 5.9L 8 Cyl. EVO = 4.7L Magnum EHC = 3.9L SMPI V6 EML = 5.9L V8 MPI Engine EPE = 2.5L POWER TECH I-4 Cyl. EVA = 4.7L V8 MPI	DDC = TRANSMISSION - 5-SPEED HD MANUAL DG4 = TRANSMISSION-MULTI-SPEED AUTO, 45RFE DGK = TRANSMISSION - 4-SPD. AUTOMATIC,42RE DGT = TRANSMISSION - 4-SPD. AUTOMATIC,46RE DGO = AUTO. TRANS.

Suspension,Front,Control Arms,Springs,Shocks,Knuckles-AN 1
Figure 2-110

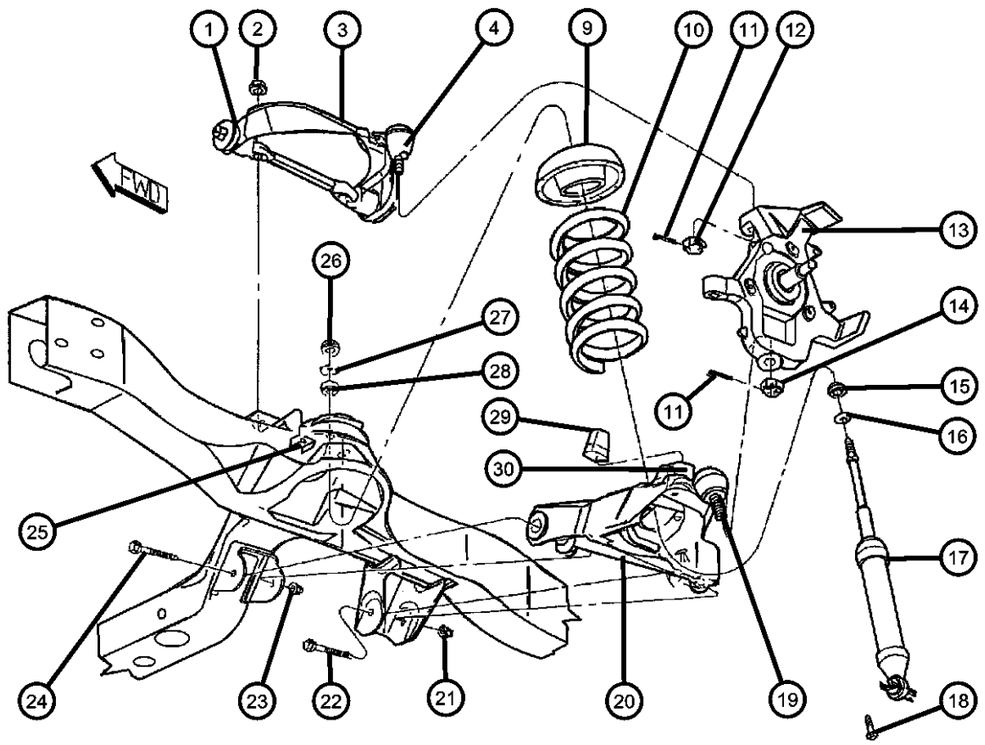

ITEM	PART NUMBER	QTY	LINE	SERIES	BODY	ENGINE	TRANS	TRIM	DESCRIPTION
12	06502749	2							NUT, Castle, M14x1.5, Ball Joint Mounting, Upper Control Arm
13									KNUCKLE, Front
	52106508AA	1	1		31, 61, 84				Right
	52106509AA	1	1		31, 61, 84				Left
14	06502858	2	1						NUT, Hex, Ball Joint Mounting, Lower Control Arm
15	52106499AA	2			31, 61, 84				GROMMET, Shock AbsorberLower
16	52038809	2							RETAINER, Shock AbsorberLower
17									SHOCK ABSORBER PACKAGE, Suspension, Front
	04883055	2	1		31, 61	EH0			SFB+ Z1J,Z1B
	0SGR5609								Rancho Shock
	0SG23318								Mopar V-Line Alternative Part
	04883057	2	1		31, 61	EH0			SFB+ Z1D
	04883058	2	1		31, 61	EV0			SFB+ Z1D
	05011245AB	2	1		31, 61	EP0			SFB
	0SG23318								Mopar V-Line Alternative Part
	0SGR5609								Rancho Shock
	05011246AA	2	1		31, 61	EM0			SFD+Z1J
	0SGR5609								Rancho Shock
	05015435AA	2	1		31, 61	EV0			SFB+Z1J,Z1B
	05015444AA	2	1		84				SFB+Z1B,EH0,EVO
	0SG23318								Mopar V-Line Alternative Part
	0SGR5609								Rancho Shock
	05015931AA	2	1		84	EM0			SFB+Z1B
18	06503792	4	1						SCREW AND WASHER, Hex Head, M8-1.25x32.00, Shock Mounting, Lower
19	05104817AA	1	1						BALL JOINT PACKAGE, Lower Control ArmRight or Left
20									ARM, Lower Control, Front
	52106116AA	1	1		31, 61, 84				Complete Assembly, Right
	52106117AA	1	1		31, 61, 84				Complete Assembly, Left

DAKOTA (AN)

SERIES	LINE	BODY	ENGINE	TRANSMISSION
L = Quad Cab L = Regular Cab L = Club Cab	1 = Dakota 2WD 5 = Dakota 4WD	31 = CLUB CAB 2-DR 6.5 FT BOX 61 = REG CAB 6.5 FT BOX 84 = CREW CAB 4-DR W.B.1	EPO = 2.5L 4 Cyl. EHO = 3.9L 6 Cyl. EMO = 5.9L 8 Cyl. EVO = 4.7L Magnum EHC = 3.9L SMPI V6 EML = 5.9L V8 MPI Engine EPE = 2.5L POWER TECH I-4 Cyl. EVA = 4.7L V8 MPI	DDC = TRANSMISSION - 5-SPEED HD MANUAL DG4 = TRANSMISSION-MULTI-SPEED AUTO, 45RFE DGK = TRANSMISSION - 4-SPD. AUTOMATIC,42RE DGT = TRANSMISSION - 4-SPD. AUTOMATIC,46RE DGO = AUTO. TRANS.

Suspension,Front,Control Arms,Springs,Shocks,Knuckles-AN 1
Figure 2-110

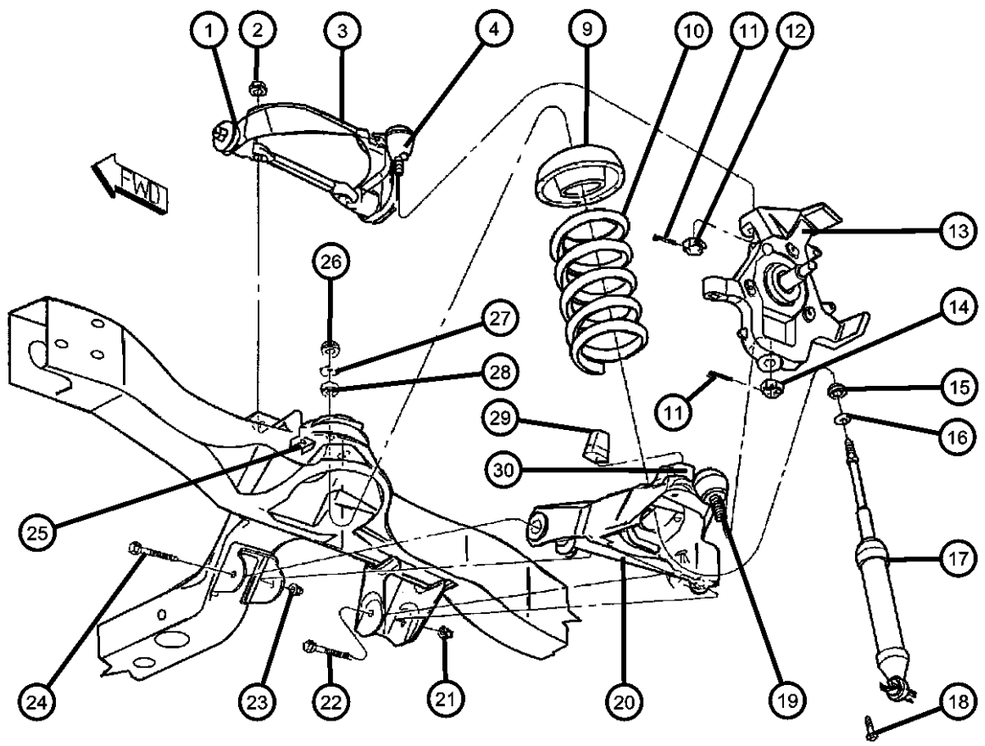

ITEM	PART NUMBER	QTY	LINE	SERIES	BODY	ENGINE	TRANS	TRIM	DESCRIPTION
21	06502697	2	1						NUT, Hex Flange Lock, M12x1.75, Rear Pivot Screw Mounting, Lower Control Arm
22	06503965	2	1						SCREW, Hex Flange Head, Rear Pivot, Lower Control Arm
23	06502698	2	1						NUT, Hex Flange Lock, Front Pivot Screw Mounting, Lower Control Arm
24	06505599AA	2	1						SCREW, Pilot Point, Front Pivot, Lower Control Arm
25	06036049AA	4	1						BOLT AND RETAINER, .562-18x2.07, Pivot Bar Mounting, Upper Control Arm
26	06504728	2							NUT AND WASHER, M10x1.5, Shock Mounting, Upper
27	52038805	2							RETAINER, Shock AbsorberUpper
28	52106498AA	2			31, 61, 84				GROMMET, Shock AbsorberUpper
29	52106438AB	2	1						BUMPER, JounceLower Control Arm
30	52038815	1	1						CUP, Jounce BumperLower Control Arm

DAKOTA (AN)

SERIES	LINE	BODY	ENGINE	TRANSMISSION
L = Quad Cab L = Regular Cab L = Club Cab	1 = Dakota 2WD 5 = Dakota 4WD	31 = CLUB CAB 2-DR 6.5 FT BOX 61 = REG CAB 6.5 FT BOX 84 = CREW CAB 4-DR W.B.1	EPO = 2.5L 4 Cyl. EHO = 3.9L 6 Cyl. EMO = 5.9L 8 Cyl. EVO = 4.7L Magnum EHC = 3.9L SMPI V6 EML = 5.9L V8 MPI Engine EPE = 2.5L POWER TECH I-4 Cyl. EVA = 4.7L V8 MPI	DDC = TRANSMISSION - 5-SPEED HD MANUAL DG4 = TRANSMISSION-MULTI-SPEED AUTO, 45RFE DGK = TRANSMISSION - 4-SPD. AUTOMATIC,42RE DGT = TRANSMISSION - 4-SPD. AUTOMATIC,46RE DGO = AUTO. TRANS.

Stabilizer Bar,Front-AN 1
Figure 2-120

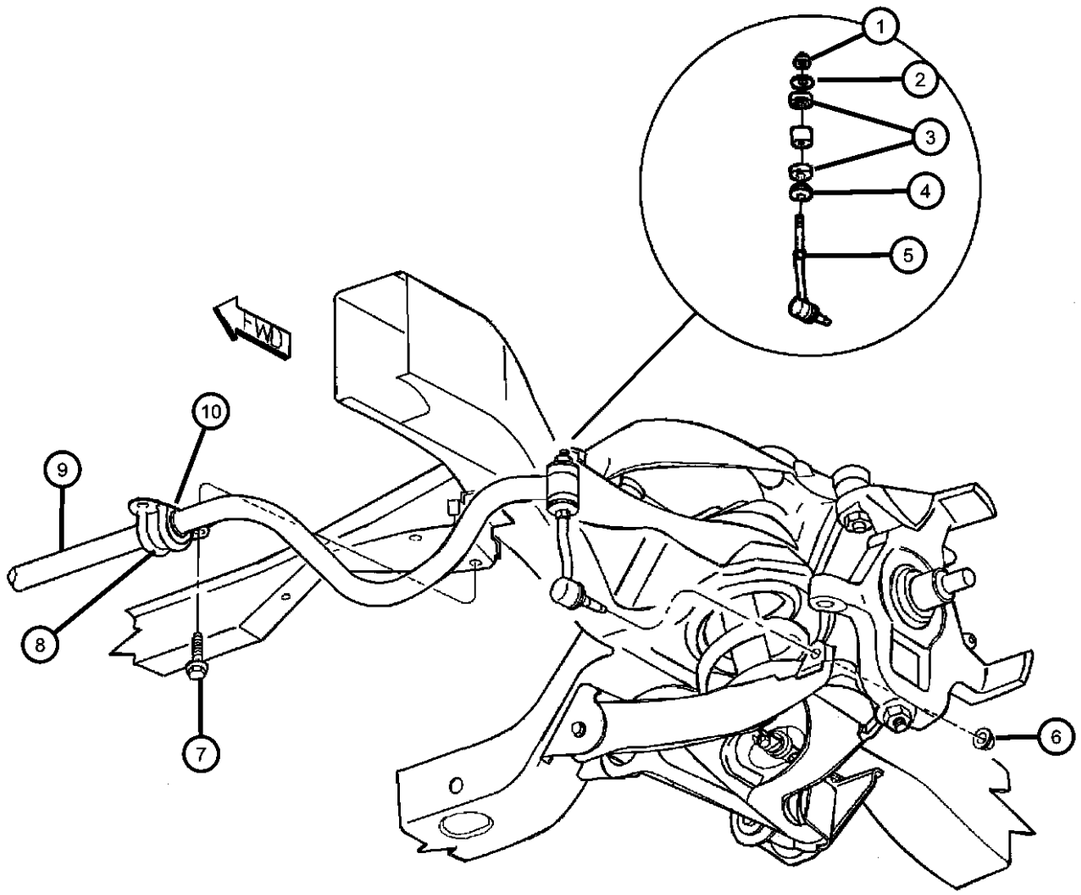

ITEM	PART NUMBER	QTY	LINE	SERIES	BODY	ENGINE	TRANS	TRIM	DESCRIPTION
Note: EP0=All 2.5L 4 Cylinder Gas Engines—EH0=All 3.9L V-6 Gas Engines—EM0=All 5.9L 8 Cylinder Gas Engines									
1									NUT, Hex Lock, M10x1.5
	06506746AA	2	1			EH0, EM0, EV0			
		2	1		31, 61	EP0			
2									RETAINER, Stabilizer Bar Grommet
	52038115	2	1			EH0, EM0, EV0			Large Hole
		2	1		31, 61	EP0			Large Hole
	52038116	2	1			EH0, EM0, EV0			Small Hole
		2	1		31, 61	EP0			Small Hole
3									GROMMET, Link
	52037916	4	1			EH0, EM0, EV0			
		4	1		31, 61	EP0			
4									LINK, Sway Eliminator
	52038736	2	1			EH0, EM0, EV0			
		2	1		31, 61	EP0			
5	06101696	4	1						NUT, Stabilizer Link to LCA, Mounting
6	06506093AA	4	1						SCREW AND WASHER, Hex Head, M10x1.50x35, Stabilizer Retainer to Frame
7									RETAINER, Stabilizer Bar Grommet
	52037710	2	1			EH0, EM0, EV0			Bushing
		2	1		31, 61	EP0			Bushing
8									STABILIZER BAR, Front
	52038864	1	1		31, 61	EP0			
	52106091AB	1	1			EH0, EM0, EV0			
9									BUSHING, Stabilizer Bar
	52038975	2	1		31, 61	EP0			
	52106092AA	2	1			EH0, EM0, EV0			

DAKOTA (AN)

SERIES	LINE	BODY	ENGINE	TRANSMISSION
L = Quad Cab L = Regular Cab L = Club Cab	1 = Dakota 2WD 5 = Dakota 4WD	31 = CLUB CAB 2-DR 6.5 FT BOX 61 = REG CAB 6.5 FT BOX 84 = CREW CAB 4-DR W.B.1	EPO = 2.5L 4 Cyl. EHO = 3.9L 6 Cyl. EMO = 5.9L 8 Cyl. EVO = 4.7L Magnum EHC = 3.9L SMPI V6 EML = 5.9L V8 MPI Engine EPE = 2.5L POWER TECH I-4 Cyl. EVA = 4.7L V8 MPI	DDC = TRANSMISSION - 5-SPEED HD MANUAL DG4 = TRANSMISSION-MULTI-SPEED AUTO, 45RFE DGK = TRANSMISSION - 4-SPD. AUTOMATIC,42RE DGT = TRANSMISSION - 4-SPD. AUTOMATIC,46RE DGO = AUTO. TRANS.

Suspension,Front,Control Arms,Shocks,Knuckles-AN 5
Figure 2-130

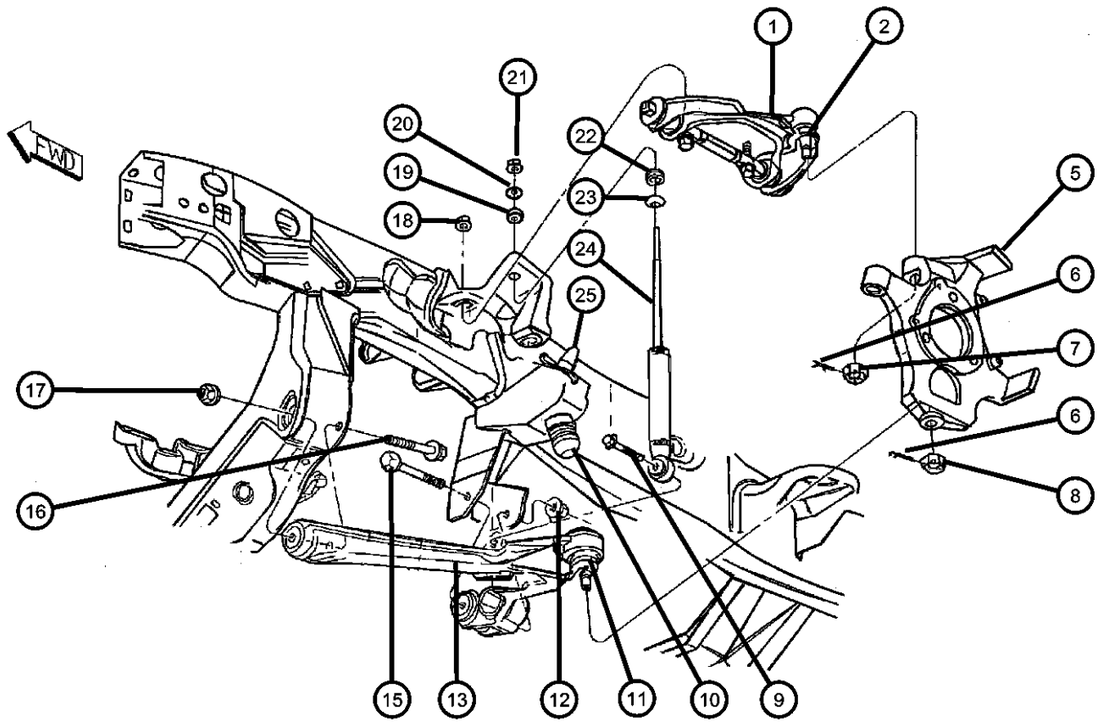

ITEM	PART NUMBER	QTY	LINE	SERIES	BODY	ENGINE	TRANS	TRIM	DESCRIPTION
NOTES:UCA=Upper Control Arm—LCA=Lower Control Arm—EM0=5.9L 8 Cylinder Gas—EV0=4.7L Gas									
1									ARM, Control
	52106386AB	1	5						Complete Assembly, Upper Right
	52106387AB	1	5						Complete Assembly, Upper Left
2	05104816AA	1	5						BALL JOINT PACKAGE, Upper Control ArmRight or Left
-3	03815704	2	5						RETAINER, Control Arm Bushing
-4	06503975	2	5						NUT, Hex Lock, M14 x 2.00, Bushing, Upper Control Arm
5									KNUCKLE, Front
	52106406AB	1	5						Right
	52106407AB	1	5						Left
6	00120123	2							PIN, Cotter, Ball Joint Stud, Upper or Lower
7	06502749	2							NUT, Castle, M14x1.5, Mounting, Upper Control Arm Ball Joint
8	06502858	2	5						NUT, Hex, Mounting, Lower Control Arm Ball Joint
9	06101971	2	5						SCREW AND WASHER, Front Shock to LCA, Mounting
10	52038558	2	5						BUMPER, JounceFront Suspension
11	52106222AA	1	5						BALL JOINT, Lower Control ArmRight or Left
12	06502698	2	5						NUT, Hex Flange Lock, Rear Pivot Screw Mounting, Lower Control Arm
13									ARM, Control
	52106396AA	1	5						Complete Assembly, Lower Right
	52106397AA	1	5						Complete Assembly, Lower Left
-14	09412281	1	5						PIN, Spring, .250 x 1.00Torsion Bar Locator
15	06504109	2	5						SCREW, Hex Flange Head, M14x2x110, Rear Pivot, Lower Control Arm
16	06506021AA	2	5						SCREW, Hex Flange Head, M12X1.75X110.00, Front Pivot, Lower Control Arm
17	06502697	2	5						NUT, Hex Flange Lock, M12x1.75, Front Pivot Screw Mounting, Lower Control Arm

DAKOTA (AN)

SERIES	LINE	BODY	ENGINE	TRANSMISSION
L = Quad Cab L = Regular Cab L = Club Cab	1 = Dakota 2WD 5 = Dakota 4WD	31 = CLUB CAB 2-DR 6.5 FT BOX 61 = REG CAB 6.5 FT BOX 84 = CREW CAB 4-DR W.B.1	EPO = 2.5L 4 Cyl. EHO = 3.9L 6 Cyl. EMO = 5.9L 8 Cyl. EVO = 4.7L Magnum EHC = 3.9L SMPI V6 EML = 5.9L V8 MPI Engine EPE = 2.5L POWER TECH I-4 Cyl. EVA = 4.7L V8 MPI	DDC = TRANSMISSION - 5-SPEED HD MANUAL DG4 = TRANSMISSION-MULTI-SPEED AUTO, 45RFE DGK = TRANSMISSION - 4-SPD. AUTOMATIC,42RE DGT = TRANSMISSION - 4-SPD. AUTOMATIC,46RE DGO = AUTO. TRANS.

Suspension,Front,Control Arms,Shocks,Knuckles-AN 5
Figure 2-130

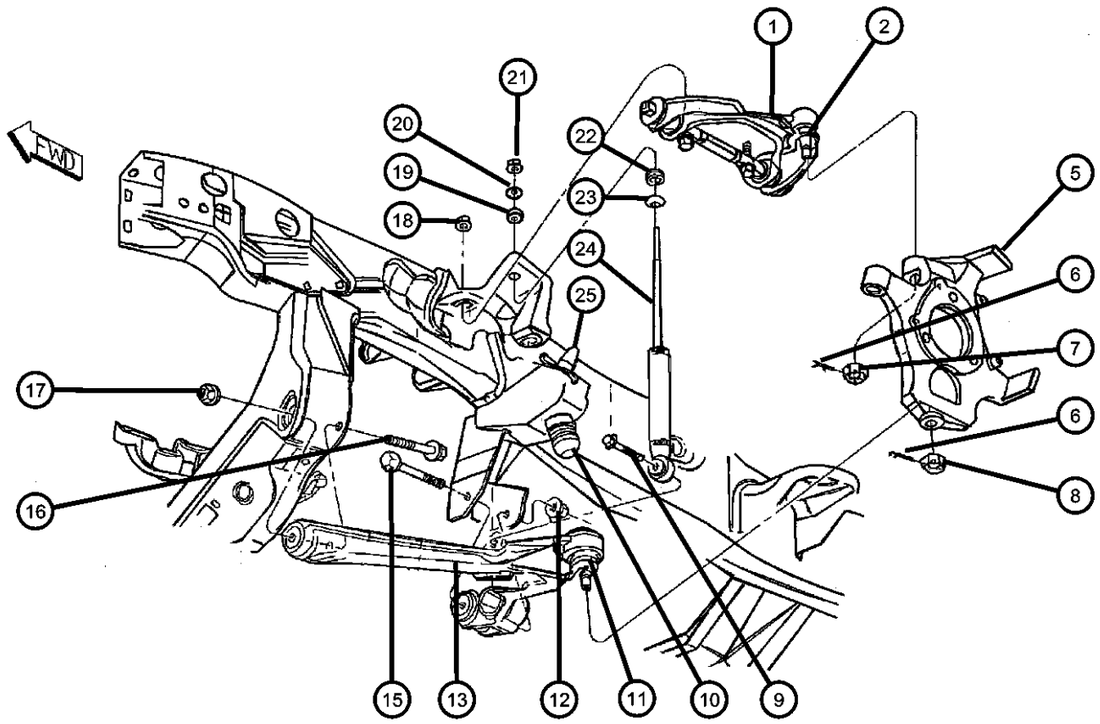

ITEM	PART NUMBER	QTY	LINE	SERIES	BODY	ENGINE	TRANS	TRIM	DESCRIPTION
18									NUT
	06504707	4	5		84				Pivot Bar Mounting, Upper Control Arm
		4	5		31, 61				Pivot Bar Mounting, Upper Control Arm
19	52106498AA	2							GROMMET, Shock AbsorberUpper
20	52038805	2							RETAINER, Shock AbsorberUpper
21	06504728	2							NUT AND WASHER, M10x1.5Shock Mounting Upper
22	52106499AA	2							GROMMET, Shock AbsorberLower
23	52038809	2							RETAINER, Shock AbsorberLower
24									SHOCK ABSORBER PACKAGE, Suspension, Front
	05015442AC	2	5		31, 61	EH0			[SFB,Z5A]
	05015443AC	2	5		31, 61	EM0, EV0			[SFB,Z5A]
	05015445AC	2	5		84				[SFB,Z5A]
	05016354AA	2	5		31, 61	EH0			[SFB,Z5B,Z5C]
	05016355AA	2	5		31, 61	EM0, EV0			[SFB,Z5B,Z5C]
25	52038781	2	5						BUMPER, Jounce

DAKOTA (AN)

SERIES	LINE	BODY	ENGINE	TRANSMISSION
L = Quad Cab	1 = Dakota 2WD	31 = CLUB CAB 2-DR 6.5 FT BOX	EPO = 2.5L 4 Cyl.	DDC = TRANSMISSION - 5-SPEED HD MANUAL
L = Regular Cab	5 = Dakota 4WD	61 = REG CAB 6.5 FT BOX	EHO = 3.9L 6 Cyl.	DG4 = TRANSMISSION-MULTI-SPEED AUTO, 45RFE
L = Club Cab		84 = CREW CAB 4-DR W.B.1	EMO = 5.9L 8 Cyl.	DGK = TRANSMISSION - 4-SPD. AUTOMATIC,42RE
			EVO = 4.7L Magnum	DGT = TRANSMISSION - 4-SPD. AUTOMATIC,46RE
			EHC = 3.9L SMPI V6	DGO = AUTO. TRANS.
			EML = 5.9L V8 MPI Engine	
			EPE = 2.5L POWER TECH I-4 Cyl.	
			EVA = 4.7L V8 MPI	

Stabilizer Bar and Torsion Bar,Front-AN 5
Figure 2-140

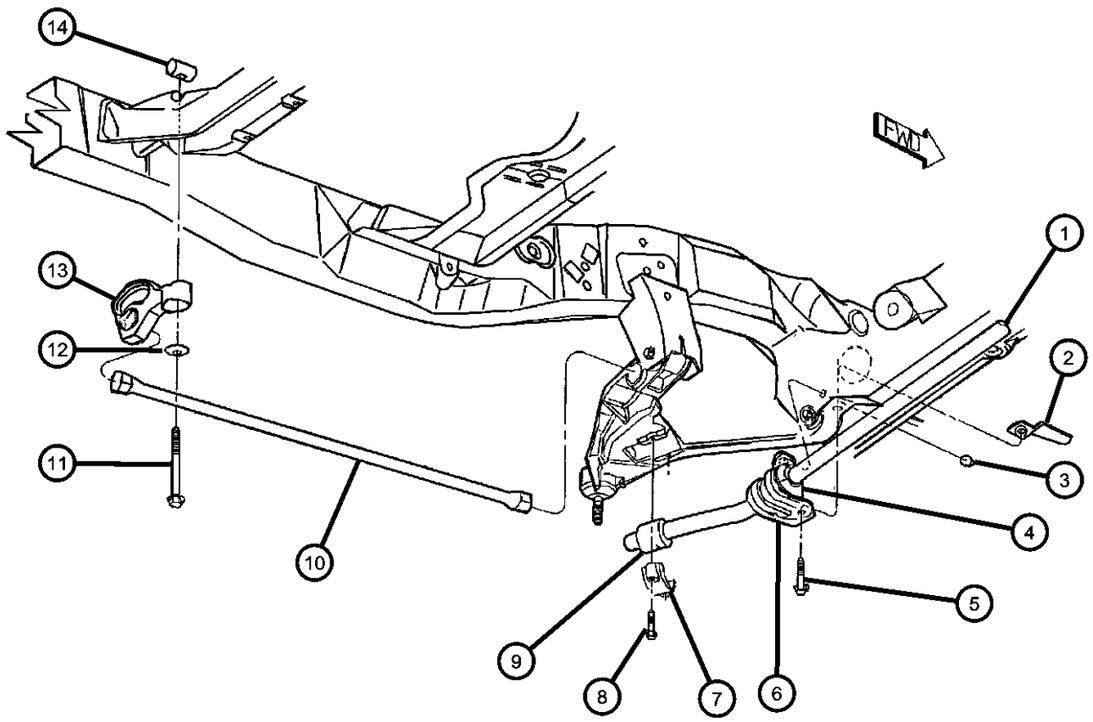

ITEM	PART NUMBER	QTY	LINE	SERIES	BODY	ENGINE	TRANS	TRIM	DESCRIPTION
Note: LCA=Lower Control Arm–Check Vin number for sales codes for Torsion Bars.									
1									BAR, Front Sway
	52106324AA	1	5		31, 61				
	52106378AA	1	5		84				
2	06502697	2	5						NUT, Hex Flange Lock, M12x1.75, Stabilizer Retainer to Crossmember
3	06502698	2	5						NUT, Hex Flange Lock, Upper Sill Bushing, Mounting
4									BUSHING, Stabilizer Bar
	52106420AA	2	5		84				Inner
	52106427AA	2	5		31, 61				Inner
5	06502559	2	5						SCREW, Hex Flange Head, M12x1.75x40.00, Stabilizer Bar Retainer, Mounting
6									RETAINER, Stabilizer Bar Grommet
	52106426AA	2	5		31, 61				Bushing, Inner
		2	5		84				Bushing, Inner
7	52106379AA	2	5						CLAMP, Stabilizer Shaft Bushing, Stabilizer Bar to LCA, Mounting
8	06101980	4	5						SCREW AND WASHER, Hex Head, M8x1.25x45, Stabilizer Bar Clamp, Mounting
9									CUSHION, Sway Eliminator
	52106332AA	2	5		31, 61				Outer
	52106421AA	2	5		84				Outer
10									BAR, Torsion
	52106640AA	1	5		31, 61, 84				[ZSA], Right
	52106641AA	1	5		31, 61, 84				[ZDA], Left
	52106642AA	1	5		31, 61, 84				[ZTA], Right
	52106643AA	1	5		31, 61, 84				[ZEA], Left
11	06035925AA	2	5						SCREW, Hex Head, .625-11x5.75, Torsion Bar Rear Anchor
12	04014100	2	5						BEARING, Torsion Bar, Torsion Bar Rear Anchor Adjust Bolt

DAKOTA (AN)

SERIES	LINE	BODY	ENGINE	TRANSMISSION
L = Quad Cab L = Regular Cab L = Club Cab	1 = Dakota 2WD 5 = Dakota 4WD	31 = CLUB CAB 2-DR 6.5 FT BOX 61 = REG CAB 6.5 FT BOX 84 = CREW CAB 4-DR W.B.1	EPO = 2.5L 4 Cyl. EHO = 3.9L 6 Cyl. EMO = 5.9L 8 Cyl. EVO = 4.7L Magnum EHC = 3.9L SMPI V6 EML = 5.9L V8 MPI Engine EPE = 2.5L POWER TECH I-4 Cyl. EVA = 4.7L V8 MPI	DDC = TRANSMISSION - 5-SPEED HD MANUAL DG4 = TRANSMISSION-MULTI-SPEED AUTO, 45RFE DGK = TRANSMISSION - 4-SPD. AUTOMATIC,42RE DGT = TRANSMISSION - 4-SPD. AUTOMATIC,46RE DGO = AUTO. TRANS.

Stabilizer Bar and Torsion Bar,Front-AN 5
Figure 2-140

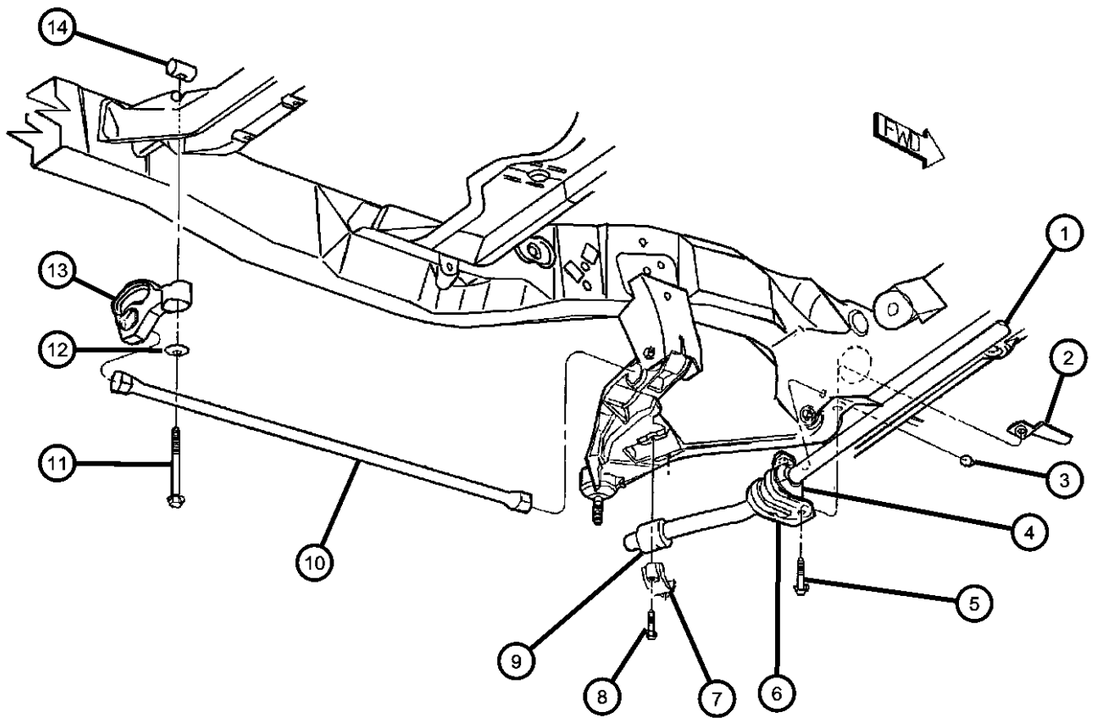

ITEM	PART NUMBER	QTY	LINE	SERIES	BODY	ENGINE	TRANS	TRIM	DESCRIPTION
13	52038973AB	2	5						ANCHOR, Torsion Bar, Front Adjustment
14	04322561	2	5						SWIVEL, Torsion Bar, Torsion Bar Rear Anchor Adjust Bolt

DAKOTA (AN)

SERIES	LINE	BODY	ENGINE	TRANSMISSION
L = Quad Cab L = Regular Cab L = Club Cab	1 = Dakota 2WD 5 = Dakota 4WD	31 = CLUB CAB 2-DR 6.5 FT BOX 61 = REG CAB 6.5 FT BOX 84 = CREW CAB 4-DR W.B.1	EPO = 2.5L 4 Cyl. EHO = 3.9L 6 Cyl. EMO = 5.9L 8 Cyl. EVO = 4.7L Magnum EHC = 3.9L SMPI V6 EML = 5.9L V8 MPI Engine EPE = 2.5L POWER TECH I-4 Cyl. EVA = 4.7L V8 MPI	DDC = TRANSMISSION - 5-SPEED HD MANUAL DG4 = TRANSMISSION-MULTI-SPEED AUTO, 45RFE DGK = TRANSMISSION - 4-SPD. AUTOMATIC,42RE DGT = TRANSMISSION - 4-SPD. AUTOMATIC,46RE DGO = AUTO. TRANS.

Shaft.Front Drive Axle
Figure 2-210

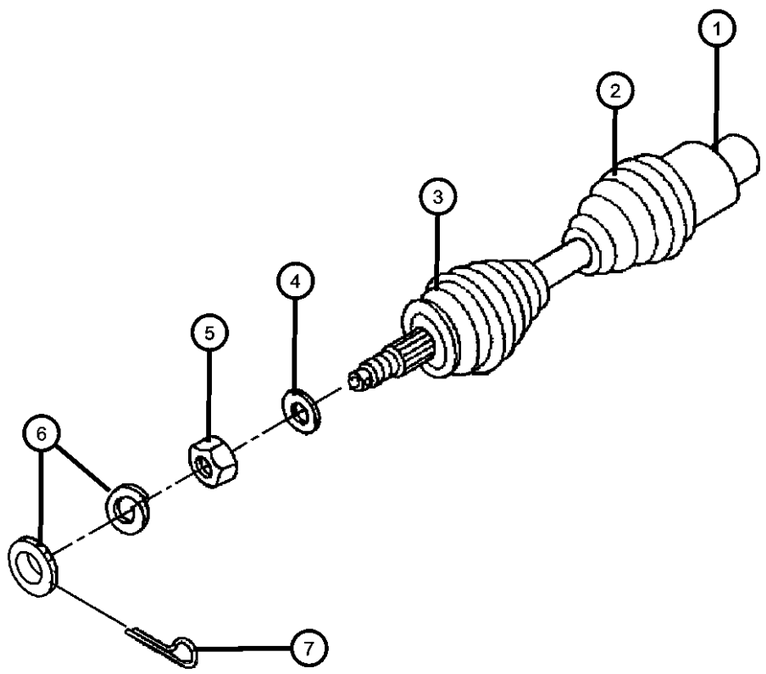

ITEM	PART NUMBER	QTY	LINE	SERIES	BODY	ENGINE	TRANS	TRIM	DESCRIPTION
1	05015964AA	2	5		31, 61, 84				SHAFT, Axle Half, with Boots, Right or Left
2	05015966AA	2	5		31, 61, 84				BOOT KIT, Half Shaft, Inner, with Clamps, Right or Left
3	05015967AA	2	5		31, 61, 84				BOOT KIT, Half Shaft, Outer, with Clamps, Right or Left
4	06502293	2	5		31, 61, 84				WASHER, Flat, M23x43x4
5	06502294	2	5		31, 61, 84				NUT, Hex Flange, M22x1.25
6	04293167	2	5		31, 61, 84				NUT AND WASHER PACKAGE
7	06500336	2	5		31, 61, 84				PIN, Cotter, M5x36.00

DAKOTA (AN)

SERIES	LINE	BODY	ENGINE	TRANSMISSION
L = Quad Cab	1 = Dakota 2WD	31 = CLUB CAB 2-DR 6.5 FT BOX	EPO = 2.5L 4 Cyl.	DDC = TRANSMISSION - 5-SPEED HD MANUAL
L = Regular Cab	5 = Dakota 4WD	61 = REG CAB 6.5 FT BOX	EHO = 3.9L 6 Cyl.	DG4 = TRANSMISSION-MULTI-SPEED AUTO, 45RFE
L = Club Cab		84 = CREW CAB 4-DR W.B.1	EMO = 5.9L 8 Cyl.	DGK = TRANSMISSION - 4-SPD. AUTOMATIC,42RE
			EVO = 4.7L Magnum	DGT = TRANSMISSION - 4-SPD. AUTOMATIC,46RE
			EHC = 3.9L SMPI V6	DGO = AUTO. TRANS.
			EML = 5.9L V8 MPI Engine	
			EPE = 2.5L POWER TECH I-4 Cyl.	
			EVA = 4.7L V8 MPI	

AR = use ase required - = Non illustrrated part

Housing,Front Axle
Figure 2-310

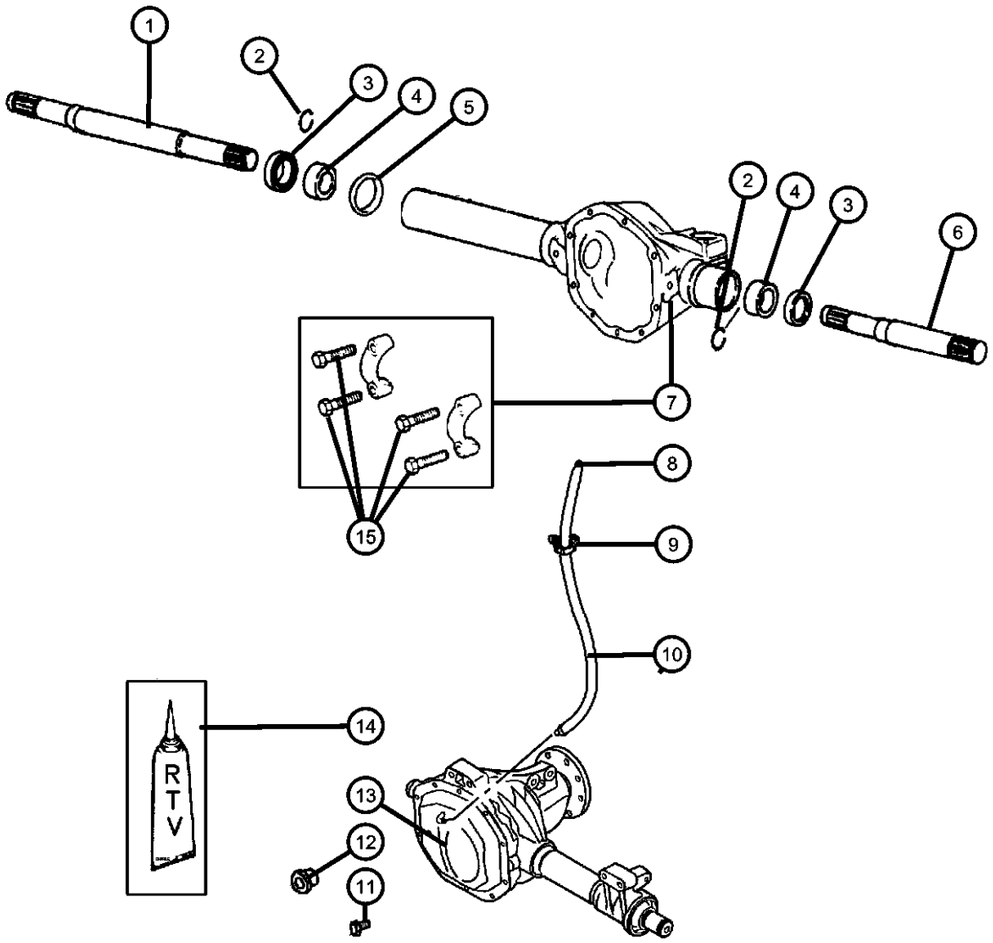

ITEM	PART NUMBER	QTY	LINE	SERIES	BODY	ENGINE	TRANS	TRIM	DESCRIPTION
1	52069708	1	5						SHAFT, Axle, Intermediate, Right
2	52069710AB	2	5						SNAP RING, Axle ShaftRight or Left
3	52069706	2	5						SEAL, Axle Drive ShaftRight or Left
4	52069707	2	5						BEARING, Axle ShaftRight or Left
5	52069888AA	2	5		31, 61, 84				O RING, Shaft DisconnectRight or Left
6	52069711	1	5						SHAFT, Axle, Intermediate
7	05015892AA	1	5						HOUSING, Axle, Includes Item 15
8	J5352955	1	5						VENT, Axle
9	56021384	1	5		31, 61, 84				CLIP, Wiring
10	52069960AC	1	5						HOSE, Axle Vent, Includes Item 8
11	06505216AA	12	5						BOLT, Differential Cover
12	52070428AA	1	5						PLUG, Differential Cover
13	52069713	1	5						COVER, Differential, with Vent
14	05010884AA	1	5						SEALANT, RTV, Cover, Differential
15	06100954	4	5						BOLT, Differential, Carrier Bearing Cap, Mounting

DAKOTA (AN)

SERIES	LINE	BODY	ENGINE	TRANSMISSION
L = Quad Cab L = Regular Cab L = Club Cab	1 = Dakota 2WD 5 = Dakota 4WD	31 = CLUB CAB 2-DR 6.5 FT BOX 61 = REG CAB 6.5 FT BOX 84 = CREW CAB 4-DR W.B.1	EPO = 2.5L 4 Cyl. EHO = 3.9L 6 Cyl. EMO = 5.9L 8 Cyl. EVO = 4.7L Magnum EHC = 3.9L SMPI V6 EML = 5.9L V8 MPI Engine EPE = 2.5L POWER TECH I-4 Cyl. EVA = 4.7L V8 MPI	DDC = TRANSMISSION - 5-SPEED HD MANUAL DG4 = TRANSMISSION-MULTI-SPEED AUTO, 45RFE DGK = TRANSMISSION - 4-SPD. AUTOMATIC,42RE DGT = TRANSMISSION - 4-SPD. AUTOMATIC,46RE DGO = AUTO. TRANS.

AR = use ase required - = Non illustrrated part

Axle Assembly,Front
Figure 2-410

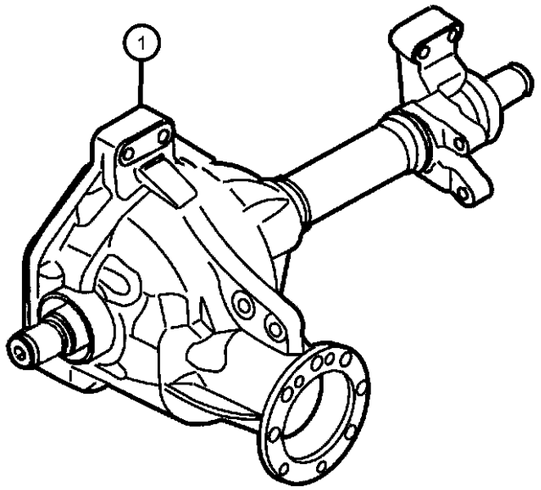

ITEM	PART NUMBER	QTY	LINE	SERIES	BODY	ENGINE	TRANS	TRIM	DESCRIPTION
Notes:DMD=3.55 Ratio—DMH=3.92 Ratio									
1									AXLE, Service Front
	52069680AB	1	5						[DMD]
	52069862AB	1	5						[DMH]

DAKOTA (AN)

SERIES	LINE	BODY	ENGINE	TRANSMISSION
L = Quad Cab L = Regular Cab L = Club Cab	1 = Dakota 2WD 5 = Dakota 4WD	31 = CLUB CAB 2-DR 6.5 FT BOX 61 = REG CAB 6.5 FT BOX 84 = CREW CAB 4-DR W.B.1	EPO = 2.5L 4 Cyl. EHO = 3.9L 6 Cyl. EMO = 5.9L 8 Cyl. EVO = 4.7L Magnum EHC = 3.9L SMPI V6 EML = 5.9L V8 MPI Engine EPE = 2.5L POWER TECH I-4 Cyl. EVA = 4.7L V8 MPI	DDC = TRANSMISSION - 5-SPEED HD MANUAL DG4 = TRANSMISSION-MULTI-SPEED AUTO, 45RFE DGK = TRANSMISSION - 4-SPD. AUTOMATIC,42RE DGT = TRANSMISSION - 4-SPD. AUTOMATIC,46RE DGO = AUTO. TRANS.

Differential,Front Axle
Figure 2-610

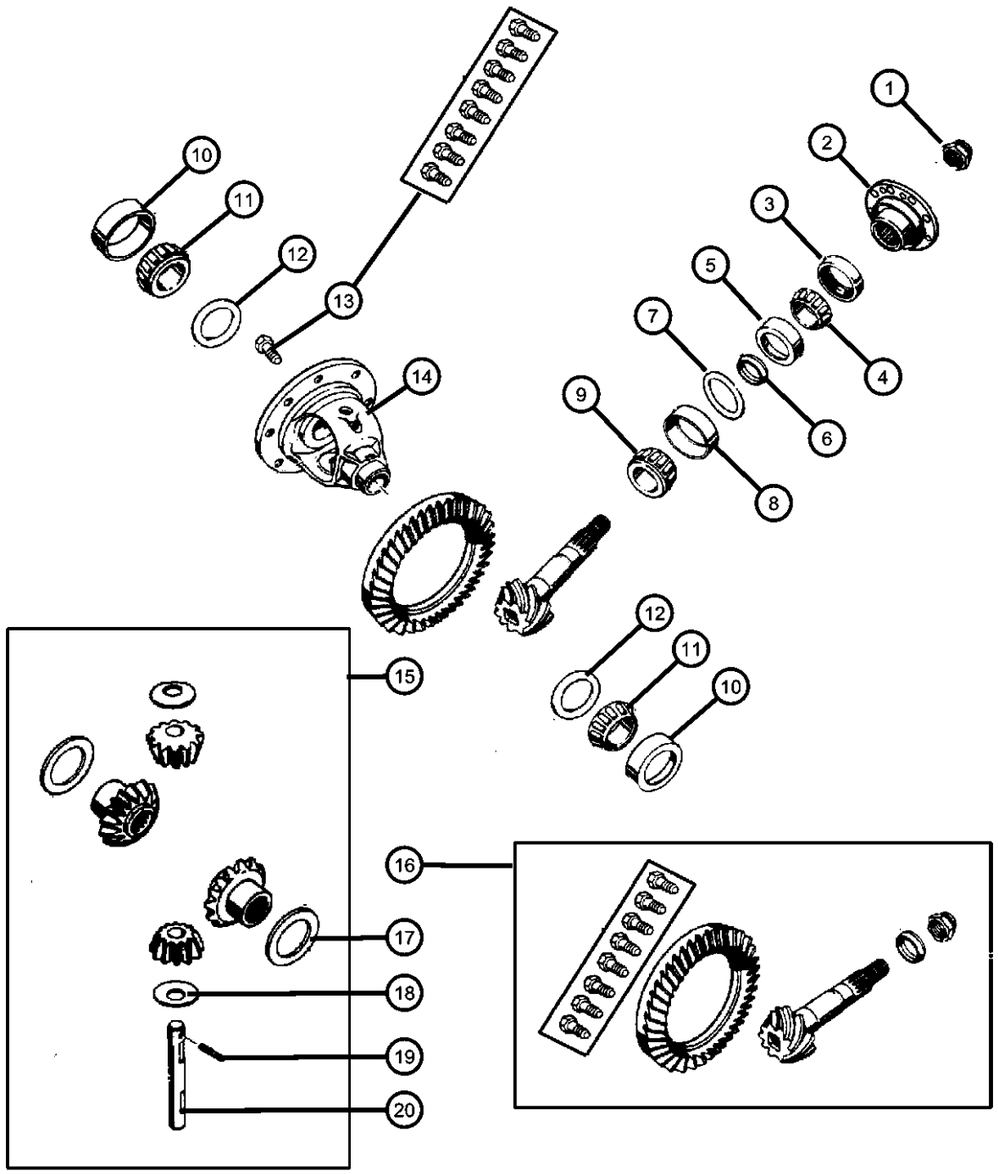

ITEM	PART NUMBER	QTY	LINE	SERIES	BODY	ENGINE	TRANS	TRIM	DESCRIPTION
Note: DMD=3.55 Ratio—DMH=3.92 Ratio									
1	06036150AA	1	5						NUT, Hex, .875-14, Pinion Flange
2	52105400AA	1	5						FLANGE, Driveshaft Yoke
3	52069700	1	5						SEAL, Drive Pinion
4	01820552	1	5						BEARING, Drive PinionFront
5	01820551	1	5						CUP, Pinion BearingFront
6	03507678	1	5						SPACER, Drive Pinion Bearing, Crush
7									SHIM PACKAGE, Pinion
	05015874AA	1	5						0.64MM to 0.91MM
	05015875AA	1	5						0.94MM to 1.27MM
	05015876AA	1	5						1.30MM to 1.57MM
8	52069693	1	5						CUP, Pinion BearingRear
9	52069691	1	5						BEARING, Drive PinionRear
10	52069916AA	2	5						CUP, Differential Side
11	52069915AA	2	5						BEARING, Differential
12									SHIM PACKAGE, Differential
	05015884AA	1	5						2.82MM to 3.05MM
	05015885AA	1	5						3.07MM to 3.35MM
	05015886AA	1	5						3.38MM to 3.66MM
	05015887AA	1	5						3.68MM to 3.96MM
	05015888AA	1	5						3.99MM to 4.27MM
	05015889AA	1	5						4.29MM to 4.57MM
	05015890AA	1	5						4.60MM to 4.88MM
13	04443158	1	5						SCREW PACKAGE, Axle Drive Gear
14	52069908AA	1	5						CASE, Differential, Includes Item 15
15	05015870AA	1	5						GEAR PACKAGE, Differential
16									GEAR KIT, Ring And Pinion
	05015873AA	1	5						[DMD]
	05015895AA	1	5						[DMH]
17	05015864AA	1	5						WASHER PACKAGE, Side Gear Thrust

DAKOTA (AN)

SERIES	LINE	BODY	ENGINE	TRANSMISSION
L = Quad Cab L = Regular Cab L = Club Cab	1 = Dakota 2WD 5 = Dakota 4WD	31 = CLUB CAB 2-DR 6.5 FT BOX 61 = REG CAB 6.5 FT BOX 84 = CREW CAB 4-DR W.B.1	EPO = 2.5L 4 Cyl. EHO = 3.9L 6 Cyl. EMO = 5.9L 8 Cyl. EVO = 4.7L Magnum EHC = 3.9L SMPI V6 EML = 5.9L V8 MPI Engine EPE = 2.5L POWER TECH I-4 Cyl. EVA = 4.7L V8 MPI	DDC = TRANSMISSION - 5-SPEED HD MANUAL DG4 = TRANSMISSION-MULTI-SPEED AUTO, 45RFE DGK = TRANSMISSION - 4-SPD. AUTOMATIC,42RE DGT = TRANSMISSION - 4-SPD. AUTOMATIC,46RE DGO = AUTO. TRANS.

Differential,Front Axle
Figure 2-610

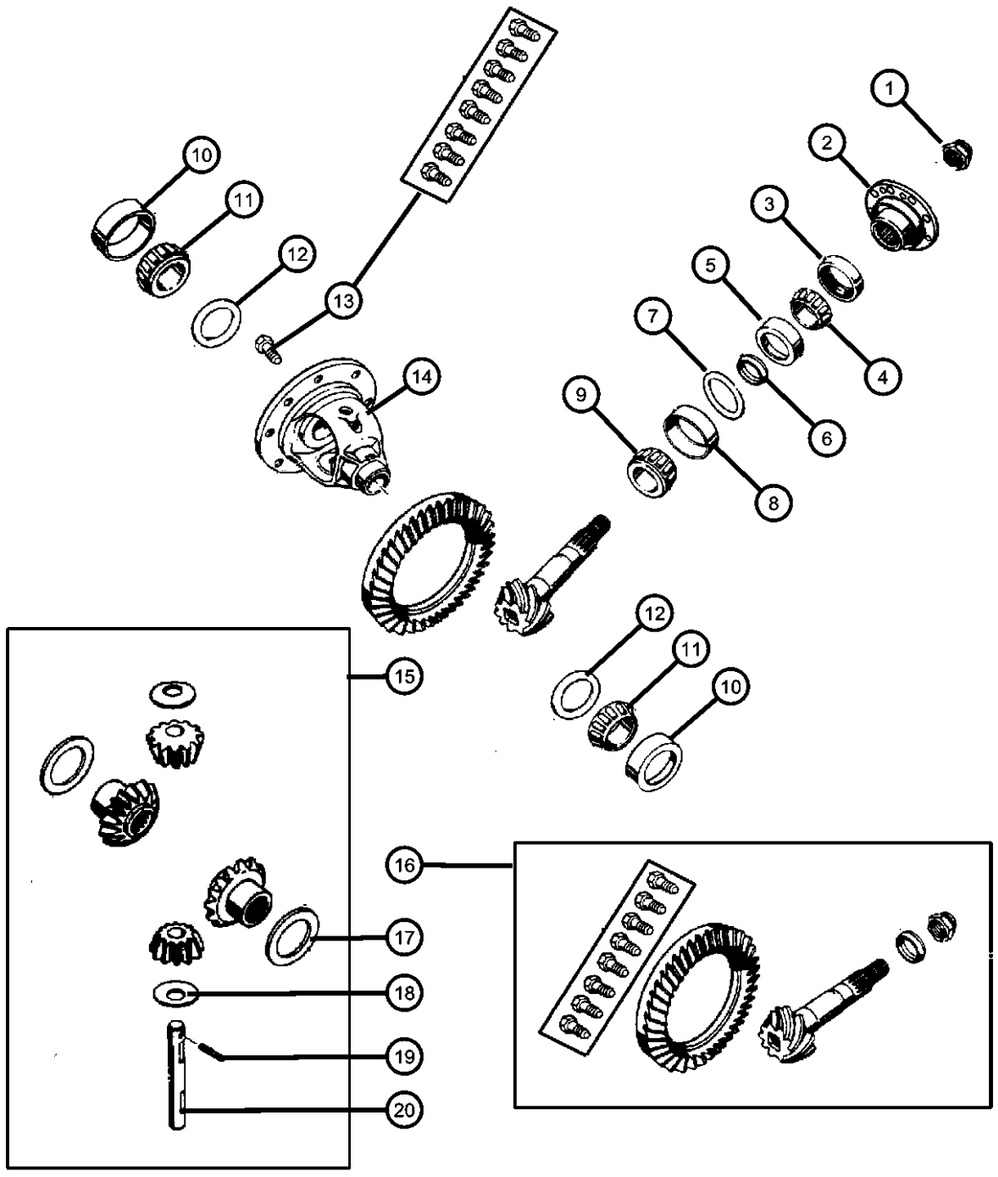

ITEM	PART NUMBER	QTY	LINE	SERIES	BODY	ENGINE	TRANS	TRIM	DESCRIPTION
18	02852912	2	5						WASHER, Pinion Thrust
19	52070338AA	1	5						PIN, Differential Shaft
20	52069657	1	5						SHAFT, Differential Pinion

DAKOTA (AN)

SERIES	LINE	BODY	ENGINE	TRANSMISSION
L = Quad Cab	1 = Dakota 2WD	31 = CLUB CAB 2-DR 6.5 FT BOX	EPO = 2.5L 4 Cyl.	DDC = TRANSMISSION - 5-SPEED HD MANUAL
L = Regular Cab	5 = Dakota 4WD	61 = REG CAB 6.5 FT BOX	EHO = 3.9L 6 Cyl.	DG4 = TRANSMISSION-MULTI-SPEED AUTO, 45RFE
L = Club Cab		84 = CREW CAB 4-DR W.B.1	EMO = 5.9L 8 Cyl.	DGK = TRANSMISSION - 4-SPD. AUTOMATIC,42RE
			EVO = 4.7L Magnum	DGT = TRANSMISSION - 4-SPD. AUTOMATIC,46RE
			EHC = 3.9L SMPI V6	DGO = AUTO. TRANS.
			EML = 5.9L V8 MPI Engine	
			EPE = 2.5L POWER TECH I-4 Cyl.	
			EVA = 4.7L V8 MPI	

Skid Plate,Front Axle
Figure 2-810

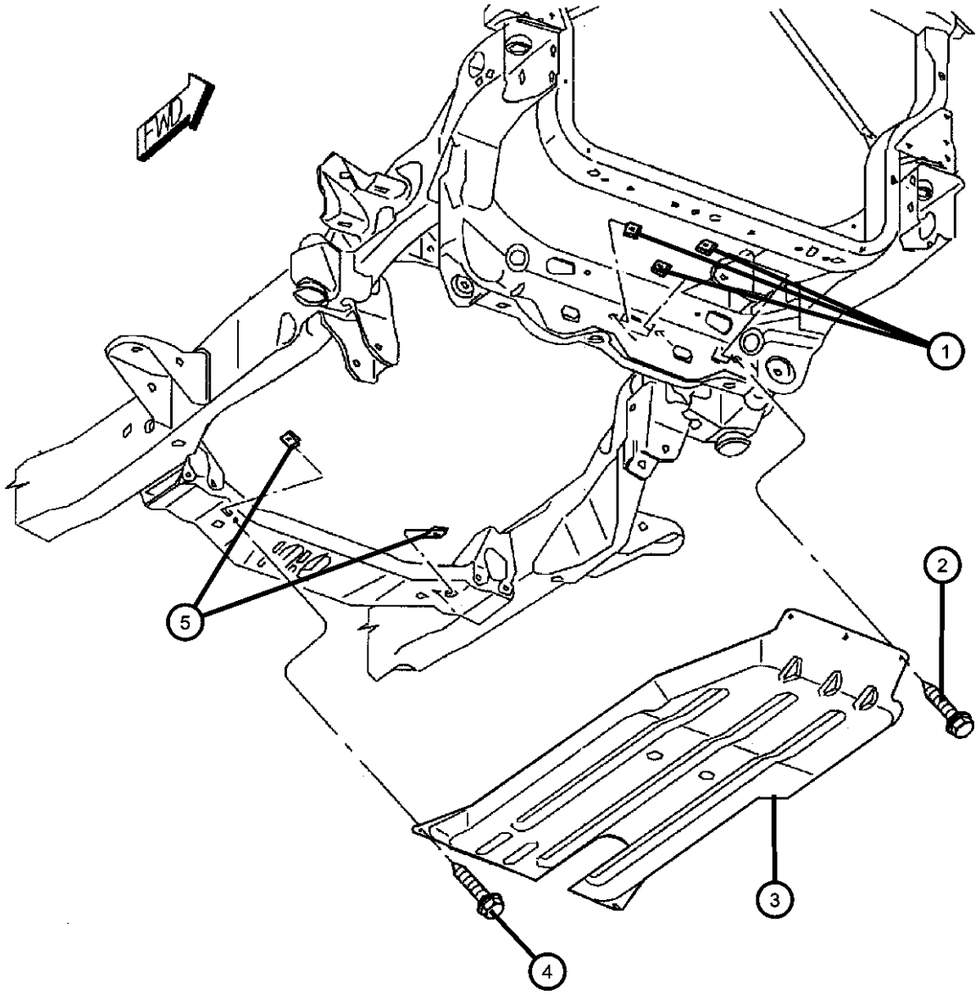

ITEM	PART NUMBER	QTY	LINE	SERIES	BODY	ENGINE	TRANS	TRIM	DESCRIPTION
1	06101340	3	5						U-NUT, M10-1.50, Skid Plate to Frame, Mounting
2	06101340	3							SCREW AND WASHER, Hex Head, M10x1.5x40, Skid Plate to Frame Mounting-Quanity 3, (NOT SERVICED)
3	52020378AC	1	5						SKID PLATE, Front
4	52020378AC	1							SCREW AND WASHER, Hex Head, M10x1.5x40, Skid Plate to Crossmember Mounting-Quanity 2, (NOT SERVICED)
5	06101340	2	5						U-NUT, M10-1.50, Skid Plate to Crossmember, Mounting

DAKOTA (AN)

SERIES	LINE	BODY	ENGINE	TRANSMISSION
L = Quad Cab L = Regular Cab L = Club Cab	1 = Dakota 2WD 5 = Dakota 4WD	31 = CLUB CAB 2-DR 6.5 FT BOX 61 = REG CAB 6.5 FT BOX 84 = CREW CAB 4-DR W.B.1	EPO = 2.5L 4 Cyl. EHO = 3.9L 6 Cyl. EMO = 5.9L 8 Cyl. EVO = 4.7L Magnum EHC = 3.9L SMPI V6 EML = 5.9L V8 MPI Engine EPE = 2.5L POWER TECH I-4 Cyl. EVA = 4.7L V8 MPI	DDC = TRANSMISSION - 5-SPEED HD MANUAL DG4 = TRANSMISSION-MULTI-SPEED AUTO, 45RFE DGK = TRANSMISSION - 4-SPD. AUTOMATIC,42RE DGT = TRANSMISSION - 4-SPD. AUTOMATIC,46RE DGO = AUTO. TRANS.

Group - 3

Rear Axle

003-100 Rear Axle 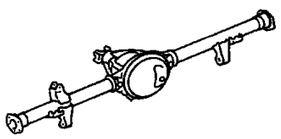	**003-200** Differential and Housing 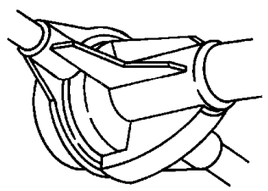	**003-300** Rear Axle Vent 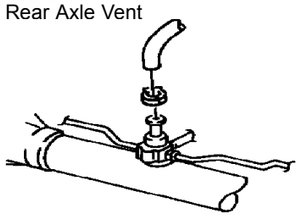	

Group - 3 Rear Axle

Illustration Title — Group-Fig. No.

Rear Axle

Axle Assembly,Rear,Chrysler Model 8.25 ..... Fig. 3 - 110
Axle Assembly,Rear,Chrysler Model 9.25 ..... Fig. 3 - 120

Differential and Housing

Axle,Rear,with Differential and Carrier,Chrysler Model 8.25 ..... Fig. 3 - 210
Axle,Rear,with Differential and Carrier,Chrysler Model 9.25 ..... Fig. 3 - 220

Rear Axle Vent

Vent,Axle ..... Fig. 3 - 310

Axle Assembly,Rear,Chrysler Model 8.25
Figure 3-110

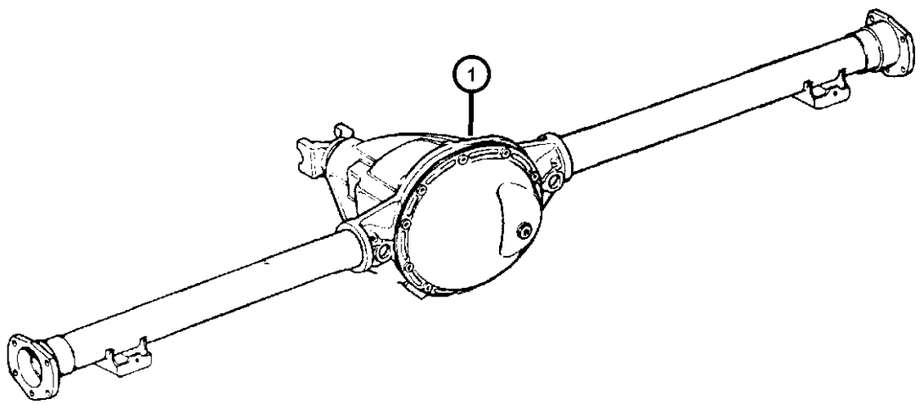

ITEM	PART NUMBER	QTY	LINE	SERIES	BODY	ENGINE	TRANS	TRIM	DESCRIPTION
NOTE: DRA = 8.25 Chrysler Axle—DMC = 3.21 Axle Ratio—DMD = 3.55 Axle Ratio—DMH = 3.92 Axle Ratio—DSA = Anti-Spin Differential									
1									AXLE, Service Rear
	05015765AA	1	1						[DMD,+DSA] with Tag# 52070300AA
	04874469								Mopar SAE 75W-140 Synthetic Gear and Axle Lube Quart
	68003055AA								Mopar SAE 75W-140 Synthetic Gear and Axle Lube 16 Gallon Keg
	05010320AA								Mopar SAE 75W-90 Synthetic Gear Lube Quart
	68003056								Mopar SAE 75W-90 Synthetic Gear Lube 16 Gallon Keg
	P5007326								Performance Mobil 1, 75W - 90 Synthetic Gear Lube
	05015768AA	1	1						[DMH,+DSA] with Tag# 52070292AB,52070302AA
	04874469								Mopar SAE 75W-140 Synthetic Gear and Axle Lube Quart
	68003055AA								Mopar SAE 75W-140 Synthetic Gear and Axle Lube 16 Gallon Keg
	05010320AA								Mopar SAE 75W-90 Synthetic Gear Lube Quart
	68003056								Mopar SAE 75W-90 Synthetic Gear Lube 16 Gallon Keg
	P5007326								Performance Mobil 1, 75W - 90 Synthetic Gear Lube
	05015774AA	1	1						[DMH,-DSA] with Tag# 52069779AD,52070301AA
	04874469								Mopar SAE 75W-140 Synthetic Gear and Axle Lube Quart
	68003055AA								Mopar SAE 75W-140 Synthetic Gear and Axle Lube 16 Gallon Keg
	05010320AA								Mopar SAE 75W-90 Synthetic Gear Lube Quart
	68003056								Mopar SAE 75W-90 Synthetic Gear Lube 16 Gallon Keg
	P5007326								Performance Mobil 1, 75W - 90 Synthetic Gear Lube
	05015783AA	1	1						[DMC,-DSA] with Tag# 52069642AF

DAKOTA (AN)

SERIES	LINE	BODY	ENGINE	TRANSMISSION
L = Quad Cab L = Regular Cab L = Club Cab	1 = Dakota 2WD 5 = Dakota 4WD	31 = CLUB CAB 2-DR 6.5 FT BOX 61 = REG CAB 6.5 FT BOX 84 = CREW CAB 4-DR W.B.1	EPO = 2.5L 4 Cyl. EHO = 3.9L 6 Cyl. EMO = 5.9L 8 Cyl. EVO = 4.7L Magnum EHC = 3.9L SMPI V6 EML = 5.9L V8 MPI Engine EPE = 2.5L POWER TECH I-4 Cyl. EVA = 4.7L V8 MPI	DDC = TRANSMISSION - 5-SPEED HD MANUAL DG4 = TRANSMISSION-MULTI-SPEED AUTO, 45RFE DGK = TRANSMISSION - 4-SPD. AUTOMATIC,42RE DGT = TRANSMISSION - 4-SPD. AUTOMATIC,46RE DGO = AUTO. TRANS.

Axle Assembly,Rear,Chrysler Model 8.25
Figure 3-110

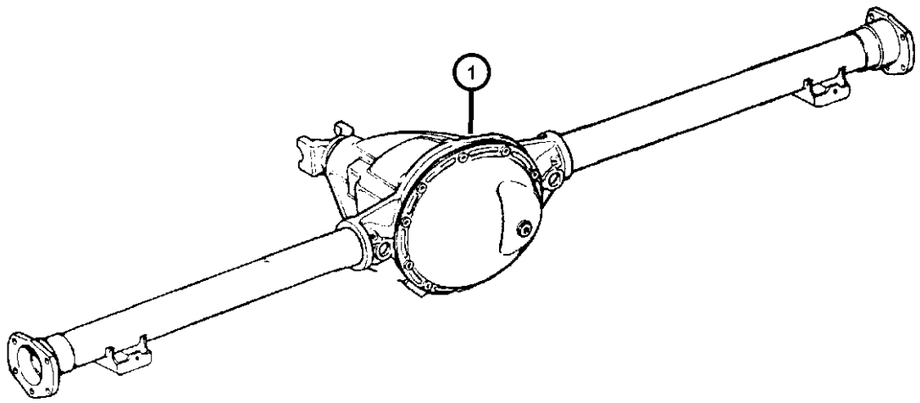

ITEM	PART NUMBER	QTY	LINE	SERIES	BODY	ENGINE	TRANS	TRIM	DESCRIPTION
	04874469								Mopar SAE 75W-140 Synthetic Gear and Axle Lube Quart
	68003055AA								Mopar SAE 75W-140 Synthetic Gear and Axle Lube 16 Gallon Keg
	05010320AA								Mopar SAE 75W-90 Synthetic Gear Lube Quart
	68003056								Mopar SAE 75W-90 Synthetic Gear Lube 16 Gallon Keg
	P5007326								Performance Mobil 1, 75W - 90 Synthetic Gear Lube
	05015786AA	1	1						[DMD,-DSA] with Tag# 52069814AD,52070298AA
	04874469								Mopar SAE 75W-140 Synthetic Gear and Axle Lube Quart
	68003055AA								Mopar SAE 75W-140 Synthetic Gear and Axle Lube 16 Gallon Keg
	05010320AA								Mopar SAE 75W-90 Synthetic Gear Lube Quart
	68003056								Mopar SAE 75W-90 Synthetic Gear Lube 16 Gallon Keg
	P5007326								Performance Mobil 1, 75W - 90 Synthetic Gear Lube
	05015798AA	1	5						[DMH,-DSA] with Tag# 52070305AA
	04874469								Mopar SAE 75W-140 Synthetic Gear and Axle Lube Quart
	68003055AA								Mopar SAE 75W-140 Synthetic Gear and Axle Lube 16 Gallon Keg
	05010320AA								Mopar SAE 75W-90 Synthetic Gear Lube Quart
	68003056								Mopar SAE 75W-90 Synthetic Gear Lube 16 Gallon Keg
	P5007326								Performance Mobil 1, 75W - 90 Synthetic Gear Lube
	05015802AA	1	5						[DMD,+DSA] with Tag# 52070293AB,52070304AA
	04874469								Mopar SAE 75W-140 Synthetic Gear and Axle Lube Quart
	68003055AA								Mopar SAE 75W-140 Synthetic Gear and Axle Lube 16 Gallon Keg

DAKOTA (AN)

SERIES	LINE	BODY	ENGINE	TRANSMISSION
L = Quad Cab L = Regular Cab L = Club Cab	1 = Dakota 2WD 5 = Dakota 4WD	31 = CLUB CAB 2-DR 6.5 FT BOX 61 = REG CAB 6.5 FT BOX 84 = CREW CAB 4-DR W.B.1	EPO = 2.5L 4 Cyl. EHO = 3.9L 6 Cyl. EMO = 5.9L 8 Cyl. EVO = 4.7L Magnum EHC = 3.9L SMPI V6 EML = 5.9L V8 MPI Engine EPE = 2.5L POWER TECH I-4 Cyl. EVA = 4.7L V8 MPI	DDC = TRANSMISSION - 5-SPEED HD MANUAL DG4 = TRANSMISSION-MULTI-SPEED AUTO, 45RFE DGK = TRANSMISSION - 4-SPD. AUTOMATIC,42RE DGT = TRANSMISSION - 4-SPD. AUTOMATIC,46RE DGO = AUTO. TRANS.

Axle Assembly,Rear,Chrysler Model 8.25
Figure 3-110

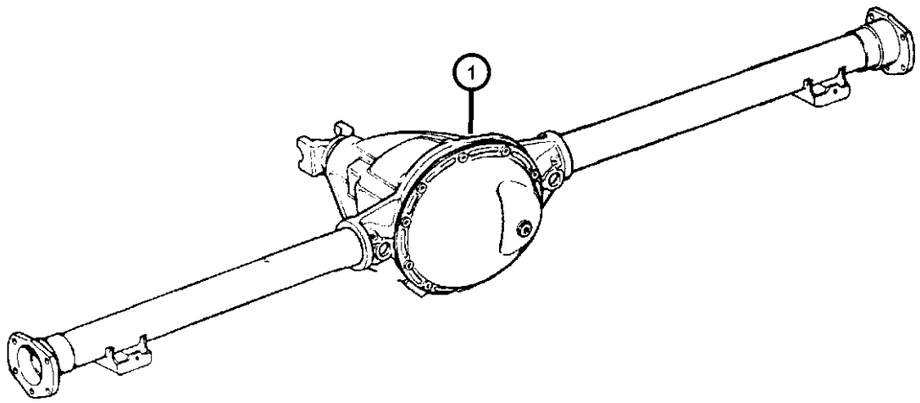

ITEM	PART NUMBER	QTY	LINE	SERIES	BODY	ENGINE	TRANS	TRIM	DESCRIPTION
	05010320AA								Mopar SAE 75W-90 Synthetic Gear Lube Quart
	68003056								Mopar SAE 75W-90 Synthetic Gear Lube 16 Gallon Keg
	P5007326								Performance Mobil 1, 75W - 90 Synthetic Gear Lube
	05015806AA	1	5						[DMD,-DSA] with Tag# 52069812AD,52070303AA
	04874469								Mopar SAE 75W-140 Synthetic Gear and Axle Lube Quart
	68003055AA								Mopar SAE 75W-140 Synthetic Gear and Axle Lube 16 Gallon Keg
	05010320AA								Mopar SAE 75W-90 Synthetic Gear Lube Quart
	68003056								Mopar SAE 75W-90 Synthetic Gear Lube 16 Gallon Keg
	P5007326								Performance Mobil 1, 75W - 90 Synthetic Gear Lube
	05015807AA	1	5						[DMH,+DSA] with Tag# 52070294AB,52070306AA
	04874469								Mopar SAE 75W-140 Synthetic Gear and Axle Lube Quart
	68003055AA								Mopar SAE 75W-140 Synthetic Gear and Axle Lube 16 Gallon Keg
	05010320AA								Mopar SAE 75W-90 Synthetic Gear Lube Quart
	68003056								Mopar SAE 75W-90 Synthetic Gear Lube 16 Gallon Keg
	P5007326								Performance Mobil 1, 75W - 90 Synthetic Gear Lube
	05015830AA	1	5						[DMH,+DSA] with Tag# 52070314AA
	04874469								Mopar SAE 75W-140 Synthetic Gear and Axle Lube Quart
	68003055AA								Mopar SAE 75W-140 Synthetic Gear and Axle Lube 16 Gallon Keg
	05010320AA								Mopar SAE 75W-90 Synthetic Gear Lube Quart
	68003056								Mopar SAE 75W-90 Synthetic Gear Lube 16 Gallon Keg
	P5007326								Performance Mobil 1, 75W - 90 Synthetic Gear Lube

DAKOTA (AN)

SERIES	LINE	BODY	ENGINE	TRANSMISSION
L = Quad Cab L = Regular Cab L = Club Cab	1 = Dakota 2WD 5 = Dakota 4WD	31 = CLUB CAB 2-DR 6.5 FT BOX 61 = REG CAB 6.5 FT BOX 84 = CREW CAB 4-DR W.B.1	EPO = 2.5L 4 Cyl. EHO = 3.9L 6 Cyl. EMO = 5.9L 8 Cyl. EVO = 4.7L Magnum EHC = 3.9L SMPI V6 EML = 5.9L V8 MPI Engine EPE = 2.5L POWER TECH I-4 Cyl. EVA = 4.7L V8 MPI	DDC = TRANSMISSION - 5-SPEED HD MANUAL DG4 = TRANSMISSION-MULTI-SPEED AUTO, 45RFE DGK = TRANSMISSION - 4-SPD. AUTOMATIC,42RE DGT = TRANSMISSION - 4-SPD. AUTOMATIC,46RE DGO = AUTO. TRANS.

Axle Assembly,Rear,Chrysler Model 9.25
Figure 3-120

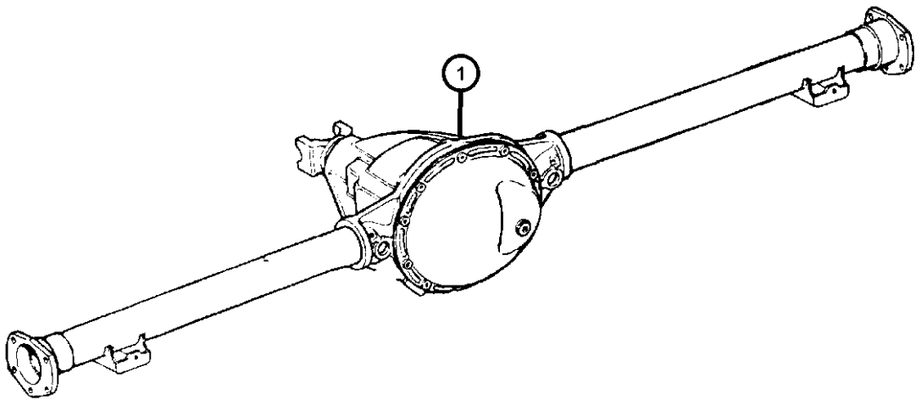

ITEM	PART NUMBER	QTY	LINE	SERIES	BODY	ENGINE	TRANS	TRIM	DESCRIPTION
Note:DRB =9.25 Chrysler Axle—DMD=3.55 Axle Ratio—DMH=3.92 Axle Ratio—DSA= Anti-Spin Differential									
1									AXLE, Service Rear
	05015809AA	1	1						[DMD,+DSA] with Tag# 52070295AB,52070308AA
	04874469								Mopar SAE 75W-140 Synthetic Gear and Axle Lube Quart
	68003055AA								Mopar SAE 75W-140 Synthetic Gear and Axle Lube 16 Gallon Keg
	05010320AA								Mopar SAE 75W-90 Synthetic Gear Lube Quart
	68003056								Mopar SAE 75W-90 Synthetic Gear Lube 16 Gallon Keg
	P5007326								Performance Mobil 1, 75W - 90 Synthetic Gear Lube
	05015815AA	1	1						[DMH,+DSA] with Tag# 52070200AB,52070310AA
	04874469								Mopar SAE 75W-140 Synthetic Gear and Axle Lube Quart
	68003055AA								Mopar SAE 75W-140 Synthetic Gear and Axle Lube 16 Gallon Keg
	05010320AA								Mopar SAE 75W-90 Synthetic Gear Lube Quart
	68003056								Mopar SAE 75W-90 Synthetic Gear Lube 16 Gallon Keg
	P5007326								Performance Mobil 1, 75W - 90 Synthetic Gear Lube
	05015816AA	1	1						DMH,-DSA] with Tag# 52069982AA,52070378AA
	04874469								Mopar SAE 75W-140 Synthetic Gear and Axle Lube Quart
	68003055AA								Mopar SAE 75W-140 Synthetic Gear and Axle Lube 16 Gallon Keg
	05010320AA								Mopar SAE 75W-90 Synthetic Gear Lube Quart
	68003056								Mopar SAE 75W-90 Synthetic Gear Lube 16 Gallon Keg
	P5007326								Performance Mobil 1, 75W - 90 Synthetic Gear Lube
	05015820AA	1	1						[DMD,-DSA] with Tag# 52069973AA,52070377AA

DAKOTA (AN)

SERIES	LINE	BODY	ENGINE	TRANSMISSION
L = Quad Cab L = Regular Cab L = Club Cab	1 = Dakota 2WD 5 = Dakota 4WD	31 = CLUB CAB 2-DR 6.5 FT BOX 61 = REG CAB 6.5 FT BOX 84 = CREW CAB 4-DR W.B.1	EPO = 2.5L 4 Cyl. EHO = 3.9L 6 Cyl. EMO = 5.9L 8 Cyl. EVO = 4.7L Magnum EHC = 3.9L SMPI V6 EML = 5.9L V8 MPI Engine EPE = 2.5L POWER TECH I-4 Cyl. EVA = 4.7L V8 MPI	DDC = TRANSMISSION - 5-SPEED HD MANUAL DG4 = TRANSMISSION-MULTI-SPEED AUTO, 45RFE DGK = TRANSMISSION - 4-SPD. AUTOMATIC,42RE DGT = TRANSMISSION - 4-SPD. AUTOMATIC,46RE DGO = AUTO. TRANS.

Axle Assembly,Rear,Chrysler Model 9.25
Figure 3-120

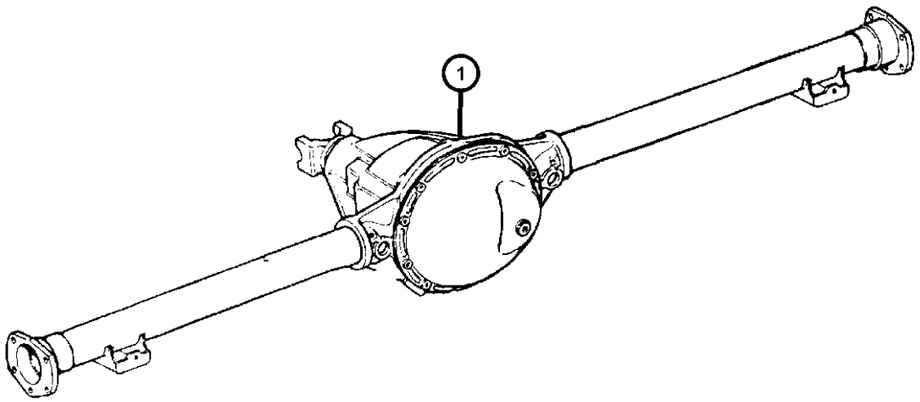

ITEM	PART NUMBER	QTY	LINE	SERIES	BODY	ENGINE	TRANS	TRIM	DESCRIPTION
	04874469								Mopar SAE 75W-140 Synthetic Gear and Axle Lube Quart
	68003055AA								Mopar SAE 75W-140 Synthetic Gear and Axle Lube 16 Gallon Keg
	05010320AA								Mopar SAE 75W-90 Synthetic Gear Lube Quart
	68003056								Mopar SAE 75W-90 Synthetic Gear Lube 16 Gallon Keg
	P5007326								Performance Mobil 1, 75W - 90 Synthetic Gear Lube
	05015821AA	1	5						DMD,+DSA] with Tag# 52070296AB,52070312AA
	04874469								Mopar SAE 75W-140 Synthetic Gear and Axle Lube Quart
	68003055AA								Mopar SAE 75W-140 Synthetic Gear and Axle Lube 16 Gallon Keg
	05010320AA								Mopar SAE 75W-90 Synthetic Gear Lube Quart
	68003056								Mopar SAE 75W-90 Synthetic Gear Lube 16 Gallon Keg
	P5007326								Performance Mobil 1, 75W - 90 Synthetic Gear Lube
	05015830AA	1	5						DMH,+DSA] with Tag# 52070297AA,52070314AB
	04874469								Mopar SAE 75W-140 Synthetic Gear and Axle Lube Quart
	68003055AA								Mopar SAE 75W-140 Synthetic Gear and Axle Lube 16 Gallon Keg
	05010320AA								Mopar SAE 75W-90 Synthetic Gear Lube Quart
	68003056								Mopar SAE 75W-90 Synthetic Gear Lube 16 Gallon Keg
	P5007326								Performance Mobil 1, 75W - 90 Synthetic Gear Lube
	05015839AA	1	5						DMH,-DSA] with Tag# 52070376AA
	04874469								Mopar SAE 75W-140 Synthetic Gear and Axle Lube Quart
	68003055AA								Mopar SAE 75W-140 Synthetic Gear and Axle Lube 16 Gallon Keg

DAKOTA (AN)

SERIES	LINE	BODY	ENGINE	TRANSMISSION
L = Quad Cab L = Regular Cab L = Club Cab	1 = Dakota 2WD 5 = Dakota 4WD	31 = CLUB CAB 2-DR 6.5 FT BOX 61 = REG CAB 6.5 FT BOX 84 = CREW CAB 4-DR W.B.1	EPO = 2.5L 4 Cyl. EHO = 3.9L 6 Cyl. EMO = 5.9L 8 Cyl. EVO = 4.7L Magnum EHC = 3.9L SMPI V6 EML = 5.9L V8 MPI Engine EPE = 2.5L POWER TECH I-4 Cyl. EVA = 4.7L V8 MPI	DDC = TRANSMISSION - 5-SPEED HD MANUAL DG4 = TRANSMISSION-MULTI-SPEED AUTO, 45RFE DGK = TRANSMISSION - 4-SPD. AUTOMATIC,42RE DGT = TRANSMISSION - 4-SPD. AUTOMATIC,46RE DGO = AUTO. TRANS.

Axle Assembly,Rear,Chrysler Model 9.25
Figure 3-120

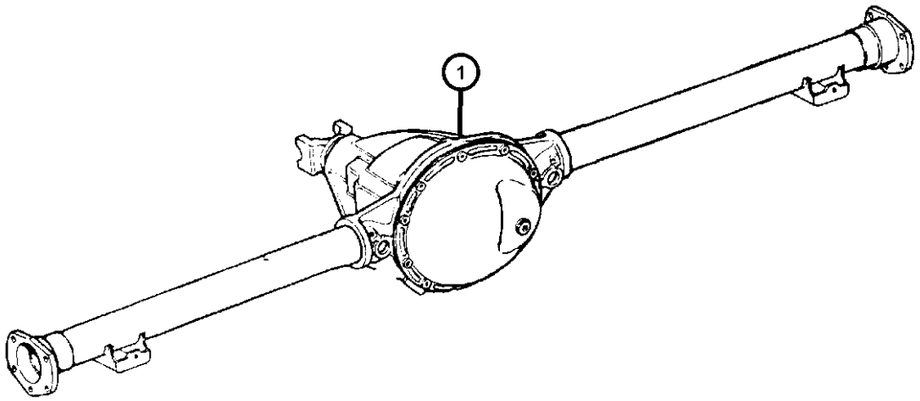

ITEM	PART NUMBER	QTY	LINE	SERIES	BODY	ENGINE	TRANS	TRIM	DESCRIPTION
	05010320AA								Mopar SAE 75W-90 Synthetic Gear Lube Quart
	68003056								Mopar SAE 75W-90 Synthetic Gear Lube 16 Gallon Keg
	05015840AA	1	5						[DMD,-DSA] with Tag# 52069975AA,52070379AA
	04874469								Mopar SAE 75W-140 Synthetic Gear and Axle Lube Quart
	68003055AA								Mopar SAE 75W-140 Synthetic Gear and Axle Lube 16 Gallon Keg
	05010320AA								Mopar SAE 75W-90 Synthetic Gear Lube Quart
	68003056								Mopar SAE 75W-90 Synthetic Gear Lube 16 Gallon Keg
	P5007326								Performance Mobil 1, 75W - 90 Synthetic Gear Lube

DAKOTA (AN)

SERIES	LINE	BODY	ENGINE	TRANSMISSION
L = Quad Cab L = Regular Cab L = Club Cab	1 = Dakota 2WD 5 = Dakota 4WD	31 = CLUB CAB 2-DR 6.5 FT BOX 61 = REG CAB 6.5 FT BOX 84 = CREW CAB 4-DR W.B.1	EPO = 2.5L 4 Cyl. EHO = 3.9L 6 Cyl. EMO = 5.9L 8 Cyl. EVO = 4.7L Magnum EHC = 3.9L SMPI V6 EML = 5.9L V8 MPI Engine EPE = 2.5L POWER TECH I-4 Cyl. EVA = 4.7L V8 MPI	DDC = TRANSMISSION - 5-SPEED HD MANUAL DG4 = TRANSMISSION-MULTI-SPEED AUTO, 45RFE DGK = TRANSMISSION - 4-SPD. AUTOMATIC,42RE DGT = TRANSMISSION - 4-SPD. AUTOMATIC,46RE DGO = AUTO. TRANS.

AR = use ase required - = Non illustrrated part

Axle,Rear,with Differential and Carrier,Chrysler Model 8.25
Figure 3-210

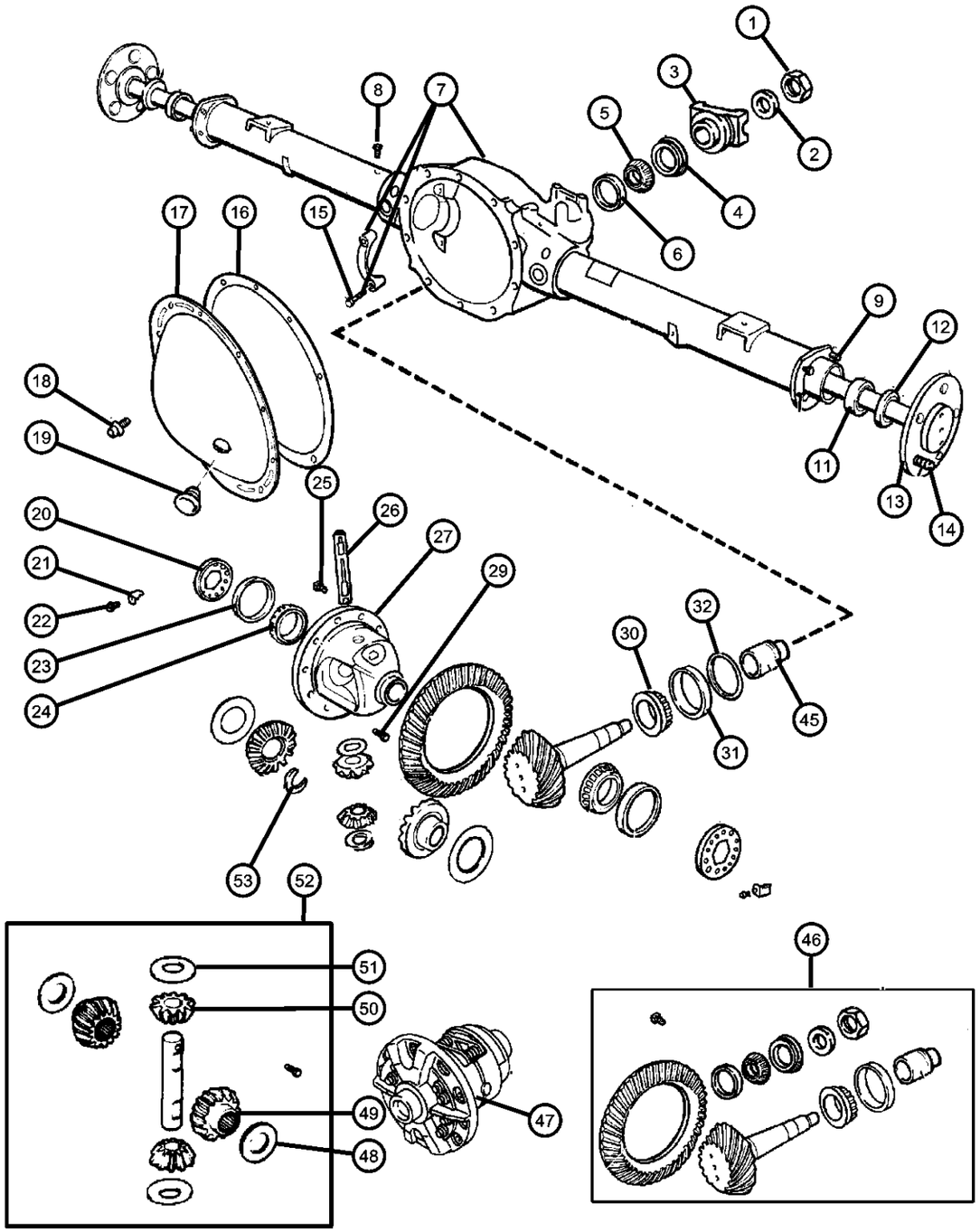

ITEM	PART NUMBER	QTY	LINE	SERIES	BODY	ENGINE	TRANS	TRIM	DESCRIPTION
NOTE: DRA = 8.25 Chrysler Axle—DMC = 3.21 Axle Ratio—DMD = 3.55 Axle Ratio—DMH = 3.92 Axle Ratio—DSA = Anti-Spin Differential									
1									NUT, Pinion Yoke
	06028041	1	1						
		1	5						
2									WASHER, Pinion Yoke
	02070117	1	1						
		1	5						
3									FLANGE, Driveshaft Yoke
	52105065	1	1						
		1	5						
4									SEAL, Drive Pinion
	52070339AA	1	1						
		1	5						
5									BEARING, Drive Pinion
	02070316	1	1						Front
		1	5						Front
6									CUP, Pinion Bearing
	02070317	1	1						Front
		1	5						Front
7									HOUSING, Axle
	04897072AC	1	1						
	04897075AC	1	5						
8									VENT, Axle
	52069896AA	1	1						
		1	5						
9									STUD
	03723668	8	1						Axle Housing to Backing Plate, Mounting
		8	5						Axle Housing to Backing Plate, Mounting
-10									NUT, Hex Flange Lock
	00152345	8	1						Axle Housing to Backing Plate, Mounting

DAKOTA (AN)

SERIES	LINE	BODY	ENGINE	TRANSMISSION
L = Quad Cab L = Regular Cab L = Club Cab	1 = Dakota 2WD 5 = Dakota 4WD	31 = CLUB CAB 2-DR 6.5 FT BOX 61 = REG CAB 6.5 FT BOX 84 = CREW CAB 4-DR W.B.1	EPO = 2.5L 4 Cyl. EHO = 3.9L 6 Cyl. EMO = 5.9L 8 Cyl. EVO = 4.7L Magnum EHC = 3.9L SMPI V6 EML = 5.9L V8 MPI Engine EPE = 2.5L POWER TECH I-4 Cyl. EVA = 4.7L V8 MPI	DDC = TRANSMISSION - 5-SPEED HD MANUAL DG4 = TRANSMISSION-MULTI-SPEED AUTO, 45RFE DGK = TRANSMISSION - 4-SPD. AUTOMATIC,42RE DGT = TRANSMISSION - 4-SPD. AUTOMATIC,46RE DGO = AUTO. TRANS.

Axle,Rear,with Differential and Carrier,Chrysler Model 8.25
Figure 3-210

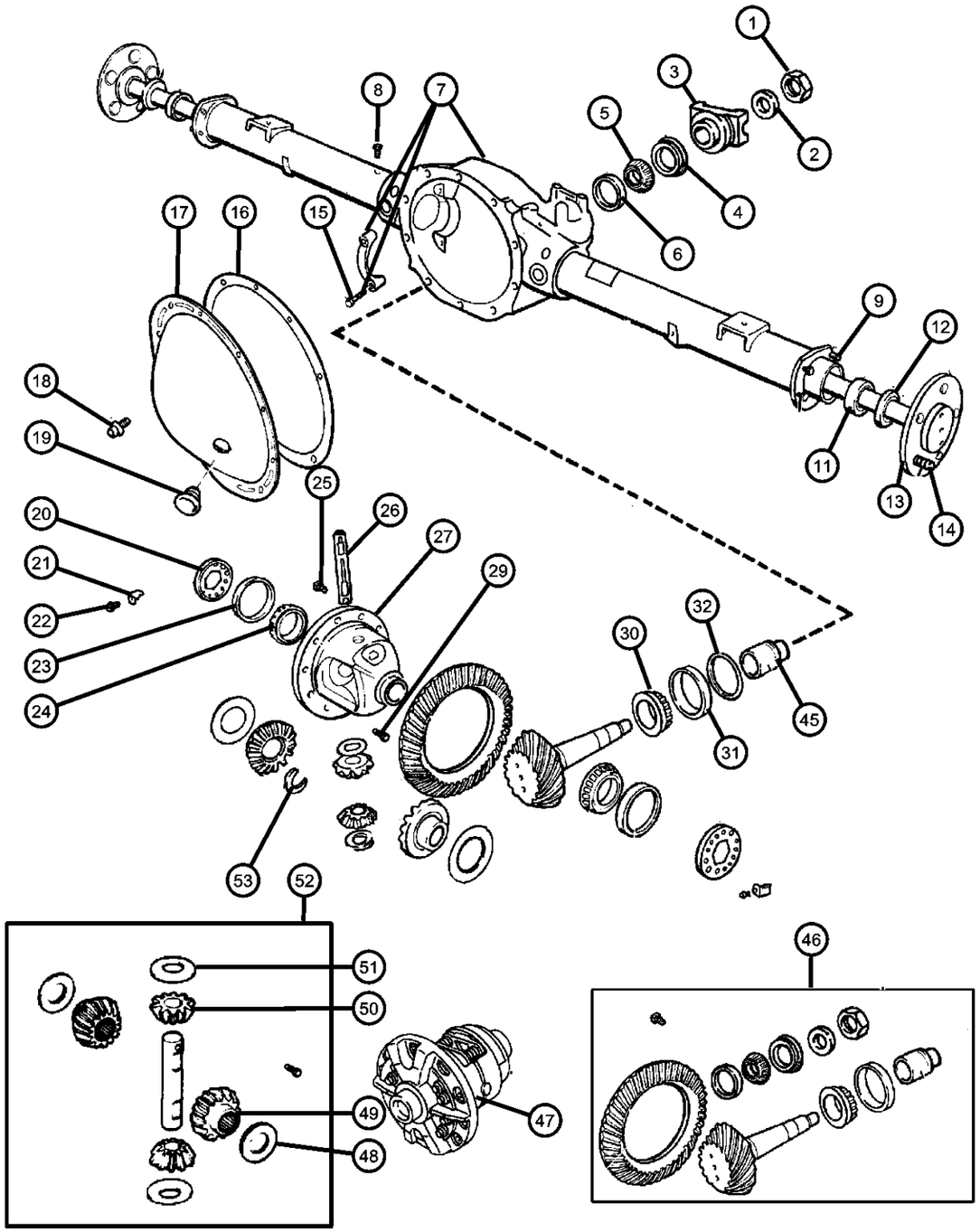

ITEM	PART NUMBER	QTY	LINE	SERIES	BODY	ENGINE	TRANS	TRIM	DESCRIPTION
		1	5						Axle Housing to Backing Plate, Mounting
11									BEARING, Wheel
	03507898AB	2	1						
		2	5						
12									SEAL, Axle Drive Shaft
	52070427AA	2	1						
		2	5						
13									SHAFT, Axle
	52069512	1	1						Right
		1	5						Right
	52069513	1	1						Left
		1	5						Left
14									STUD, Wheel
	06036123AA	12	1						
		12	5						
15									SCREW, Hex Head, .50-13x2.38
	03432695	4	1						Carrier Bearing Cap, Mounting
		4	5						Carrier Bearing Cap, Mounting
16									SEALANT, RTV
	05010884AA	1	1						
		1	5						
17									COVER, Differential
	03723681AC	1	1						
		1	5						
18									SCREW AND WASHER, Hex Flange Head, .312-18x.562
	06033043	10	1						Differential Cover, Mounting
		10	5						Differential Cover, Mounting
19									PLUG, Differential Cover
	52070428AA	1	1						
		1	5						
20									ADJUSTER, Differential Bearing

DAKOTA (AN)

SERIES	LINE	BODY	ENGINE	TRANSMISSION
L = Quad Cab	1 = Dakota 2WD	31 = CLUB CAB 2-DR 6.5 FT BOX	EPO = 2.5L 4 Cyl.	DDC = TRANSMISSION - 5-SPEED HD MANUAL
L = Regular Cab	5 = Dakota 4WD	61 = REG CAB 6.5 FT BOX	EHO = 3.9L 6 Cyl.	DG4 = TRANSMISSION-MULTI-SPEED AUTO, 45RFE
L = Club Cab		84 = CREW CAB 4-DR W.B.1	EMO = 5.9L 8 Cyl.	DGK = TRANSMISSION - 4-SPD. AUTOMATIC,42RE
			EVO = 4.7L Magnum	DGT = TRANSMISSION - 4-SPD. AUTOMATIC,46RE
			EHC = 3.9L SMPI V6	DGO = AUTO. TRANS.
			EML = 5.9L V8 MPI Engine	
			EPE = 2.5L POWER TECH I-4 Cyl.	
			EVA = 4.7L V8 MPI	

Axle,Rear,with Differential and Carrier,Chrysler Model 8.25
Figure 3-210

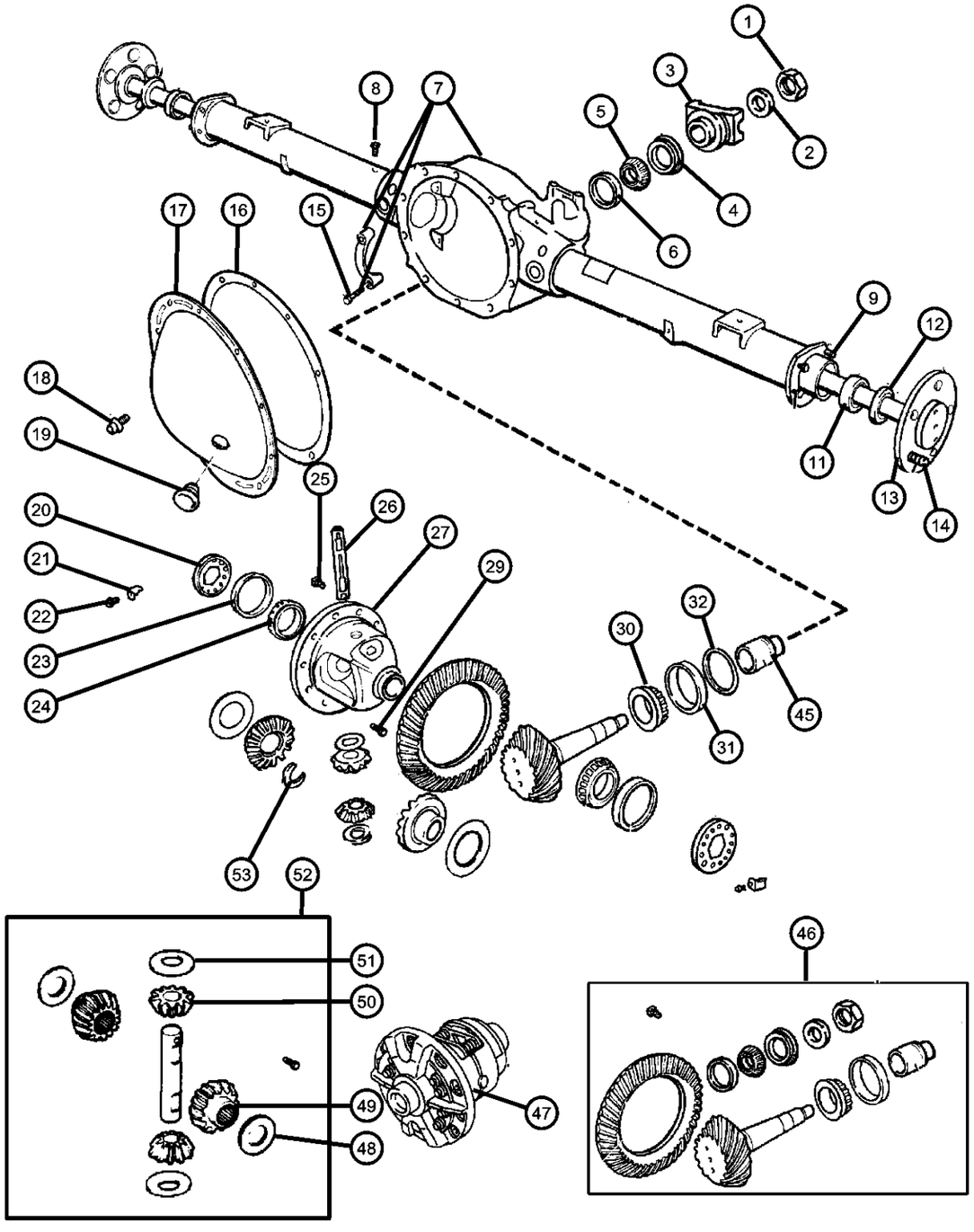

ITEM	PART NUMBER	QTY	LINE	SERIES	BODY	ENGINE	TRANS	TRIM	DESCRIPTION
	03507876	2	1						
		2	5						
21									LOCK, Differential Bearing
	03723859	2	1						
		2	5						
22									SCREW AND WASHER, Hex Head, .25-20x.50
	06023092	2	1						Differential Bearing Lock
		2	5						Differential Bearing Lock
23									CUP, Differential Side
	03723569	2	1						
		2	5						
24									BEARING, Differential
	01790541	2	1						
		2	5						
25									SCREW PACKAGE, Axle Drive Gear
	04443158	1	1						Ring Gear, Mounting
		1	5						Ring Gear, Mounting
26									SHAFT, Differential Pinion, Also Serviced In Differential Gear Package
	52069657	1	1						[-DSA]
		1	5		31, 61, 84				[-DSA]
27									CASE, Differential
	52069428	1	1						[-DSA] without Internal Parts
		1	5						[-DSA] without Internal Parts
-28									TONE RING, Sensor
	04384226	1	1						
		1	5		31, 61, 84				
29									SCREW, Hex Head, .312-18x1.80, Also Serviced in Differential Gear Package
	03507724	1	1						

DAKOTA (AN)

SERIES	LINE	BODY	ENGINE	TRANSMISSION
L = Quad Cab L = Regular Cab L = Club Cab	1 = Dakota 2WD 5 = Dakota 4WD	31 = CLUB CAB 2-DR 6.5 FT BOX 61 = REG CAB 6.5 FT BOX 84 = CREW CAB 4-DR W.B.1	EPO = 2.5L 4 Cyl. EHO = 3.9L 6 Cyl. EMO = 5.9L 8 Cyl. EVO = 4.7L Magnum EHC = 3.9L SMPI V6 EML = 5.9L V8 MPI Engine EPE = 2.5L POWER TECH I-4 Cyl. EVA = 4.7L V8 MPI	DDC = TRANSMISSION - 5-SPEED HD MANUAL DG4 = TRANSMISSION-MULTI-SPEED AUTO, 45RFE DGK = TRANSMISSION - 4-SPD. AUTOMATIC,42RE DGT = TRANSMISSION - 4-SPD. AUTOMATIC,46RE DGO = AUTO. TRANS.

Axle,Rear,with Differential and Carrier,Chrysler Model 8.25
Figure 3-210

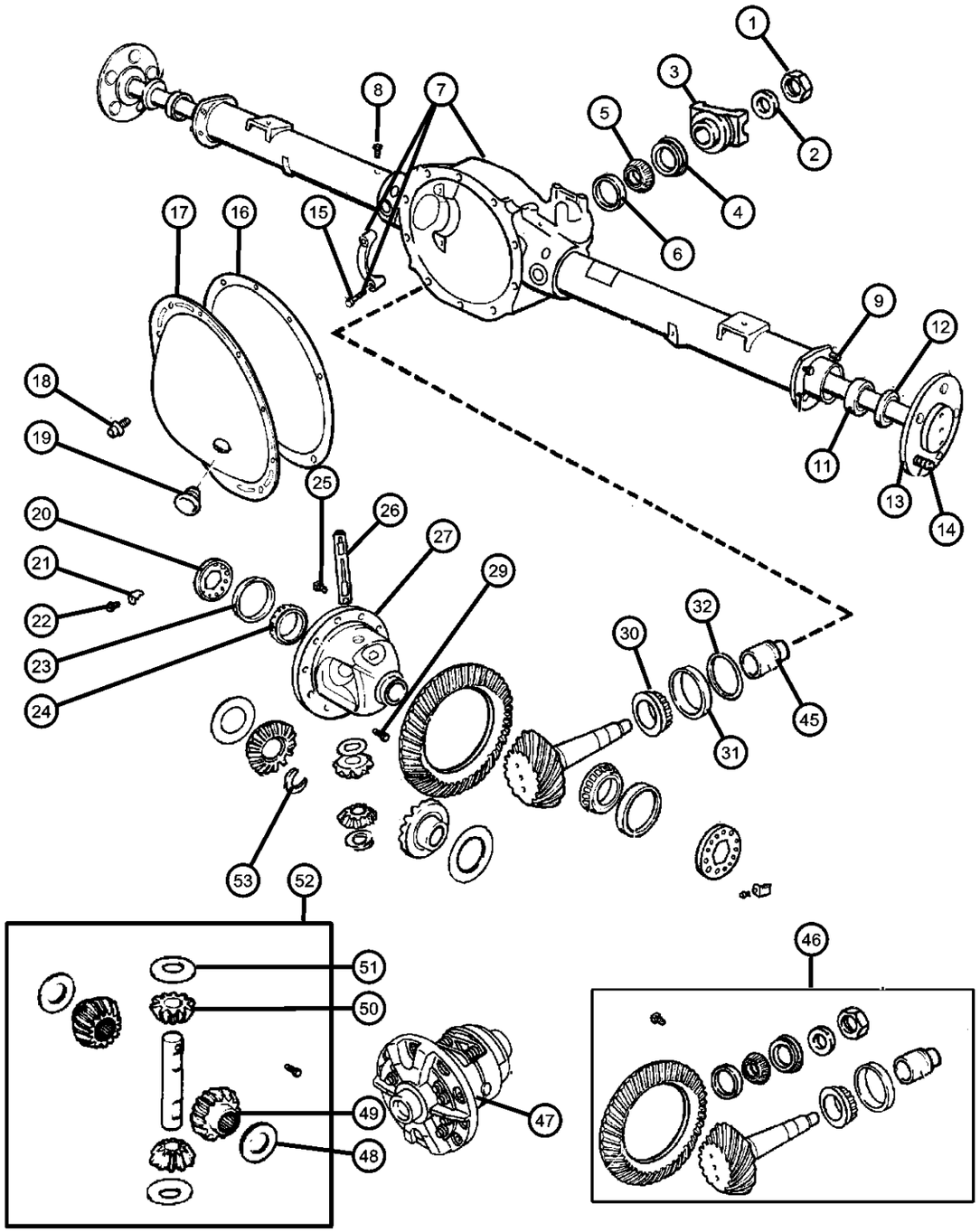

ITEM	PART NUMBER	QTY	LINE	SERIES	BODY	ENGINE	TRANS	TRIM	DESCRIPTION
		1	5						
30									BEARING, Drive Pinion
	02800484	1	1						Rear
		1	5						Rear
31									CUP, Pinion Bearing
	02800485	1	1						Rear
		1	5						Rear
32									SHIM, Drive Pinion Bearing, 0.020
	03723520	AR	1						
		AR	5						
-33									SHIM, Drive Pinion Bearing, 0.022
	03723522	AR	1						
		AR	5						
-34									SHIM, Drive Pinion Bearing, 0.024
	03723524	AR	1						
		AR	5						
-35									SHIM, Drive Pinion Bearing, 0.026
	03723526	AR	1						
		AR	5						
-36									SHIM, Drive Pinion Bearing, 0.027
	03723527	AR	1						
		AR	5						
-37									SHIM, Drive Pinion Bearing, 0.028
	03723528	AR	1						
		AR	5						
-38									SHIM, Drive Pinion Bearing, 0.029
	03723529	AR	1						
		AR	5						
-39									SHIM, Drive Pinion Bearing, 0.030
	03723530	AR	1						
		AR	5						

DAKOTA (AN)

SERIES	LINE	BODY	ENGINE	TRANSMISSION
L = Quad Cab L = Regular Cab L = Club Cab	1 = Dakota 2WD 5 = Dakota 4WD	31 = CLUB CAB 2-DR 6.5 FT BOX 61 = REG CAB 6.5 FT BOX 84 = CREW CAB 4-DR W.B.1	EPO = 2.5L 4 Cyl. EHO = 3.9L 6 Cyl. EMO = 5.9L 8 Cyl. EVO = 4.7L Magnum EHC = 3.9L SMPI V6 EML = 5.9L V8 MPI Engine EPE = 2.5L POWER TECH I-4 Cyl. EVA = 4.7L V8 MPI	DDC = TRANSMISSION - 5-SPEED HD MANUAL DG4 = TRANSMISSION-MULTI-SPEED AUTO, 45RFE DGK = TRANSMISSION - 4-SPD. AUTOMATIC,42RE DGT = TRANSMISSION - 4-SPD. AUTOMATIC,46RE DGO = AUTO. TRANS.

AR = use ase required - = Non illustrrated part

Axle,Rear,with Differential and Carrier,Chrysler Model 8.25
Figure 3-210

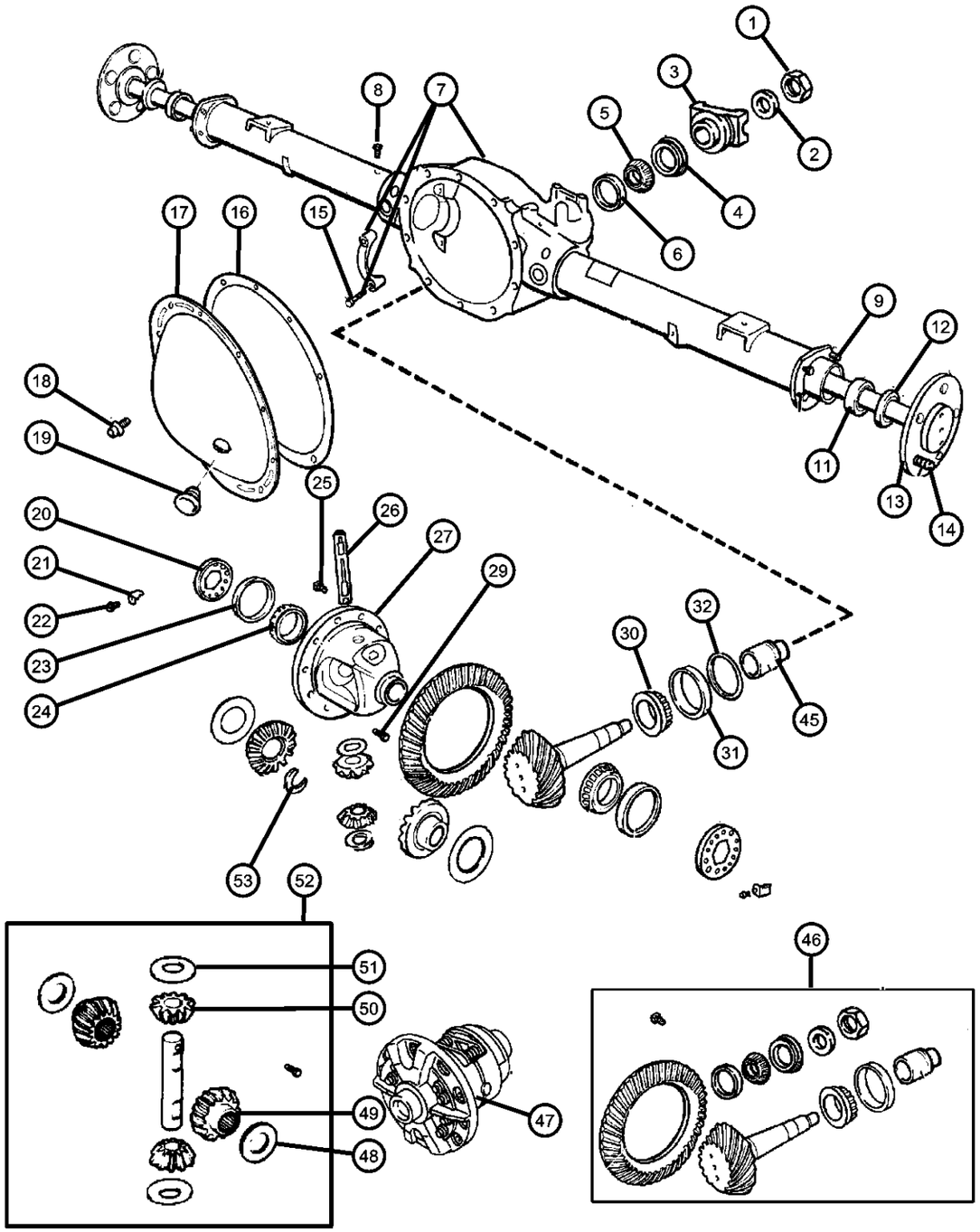

ITEM	PART NUMBER	QTY	LINE	SERIES	BODY	ENGINE	TRANS	TRIM	DESCRIPTION
-40									SHIM, Drive Pinion Bearing, 0.031
	03723531	AR	1						
		AR	5						
-41									SHIM, Drive Pinion Bearing, 0.032
	03723532	AR	1						
		AR	5						
-42									SHIM, Drive Pinion Bearing, 0.034
	03723534	AR	1						
		AR	5						
-43									SHIM, Drive Pinion Bearing, 0.036
	03723536	AR	1						
		AR	5						
-44									SHIM, Drive Pinion Bearing, 0.038
	03723538	AR	1						
		AR	5						
45									SPACER, Drive Pinion Bearing
	03507575	1	1						Crush
		1	5						Crush
46									GEAR KIT, Ring And Pinion
	04856540AB	1	5						[DMD]
		1	1						[DMD]
	04882051AB	1	1						[DMC]
	04882132AB	1	1						[DMH]
		1	5						[DMH]
47									CASE, Differential
	52098778	1	1						[+DSA] with Internal Parts
		1	5						[+DSA] with Internal Parts
48									WASHER PACKAGE, Side Gear Thrust, Also Serviced In Differential Gear Package
	04883085	1	1						[-DSA]
		1	5						[-DSA]

DAKOTA (AN)

SERIES	LINE	BODY	ENGINE	TRANSMISSION
L = Quad Cab	1 = Dakota 2WD	31 = CLUB CAB 2-DR 6.5 FT BOX	EPO = 2.5L 4 Cyl.	DDC = TRANSMISSION - 5-SPEED HD MANUAL
L = Regular Cab	5 = Dakota 4WD	61 = REG CAB 6.5 FT BOX	EHO = 3.9L 6 Cyl.	DG4 = TRANSMISSION-MULTI-SPEED AUTO, 45RFE
L = Club Cab		84 = CREW CAB 4-DR W.B.1	EMO = 5.9L 8 Cyl.	DGK = TRANSMISSION - 4-SPD. AUTOMATIC,42RE
			EVO = 4.7L Magnum	DGT = TRANSMISSION - 4-SPD. AUTOMATIC,46RE
			EHC = 3.9L SMPI V6	DGO = AUTO. TRANS.
			EML = 5.9L V8 MPI Engine	
			EPE = 2.5L POWER TECH I-4 Cyl.	
			EVA = 4.7L V8 MPI	

AR = use ase required - = Non illustrrated part

Axle,Rear,with Differential and Carrier,Chrysler Model 8.25
Figure 3-210

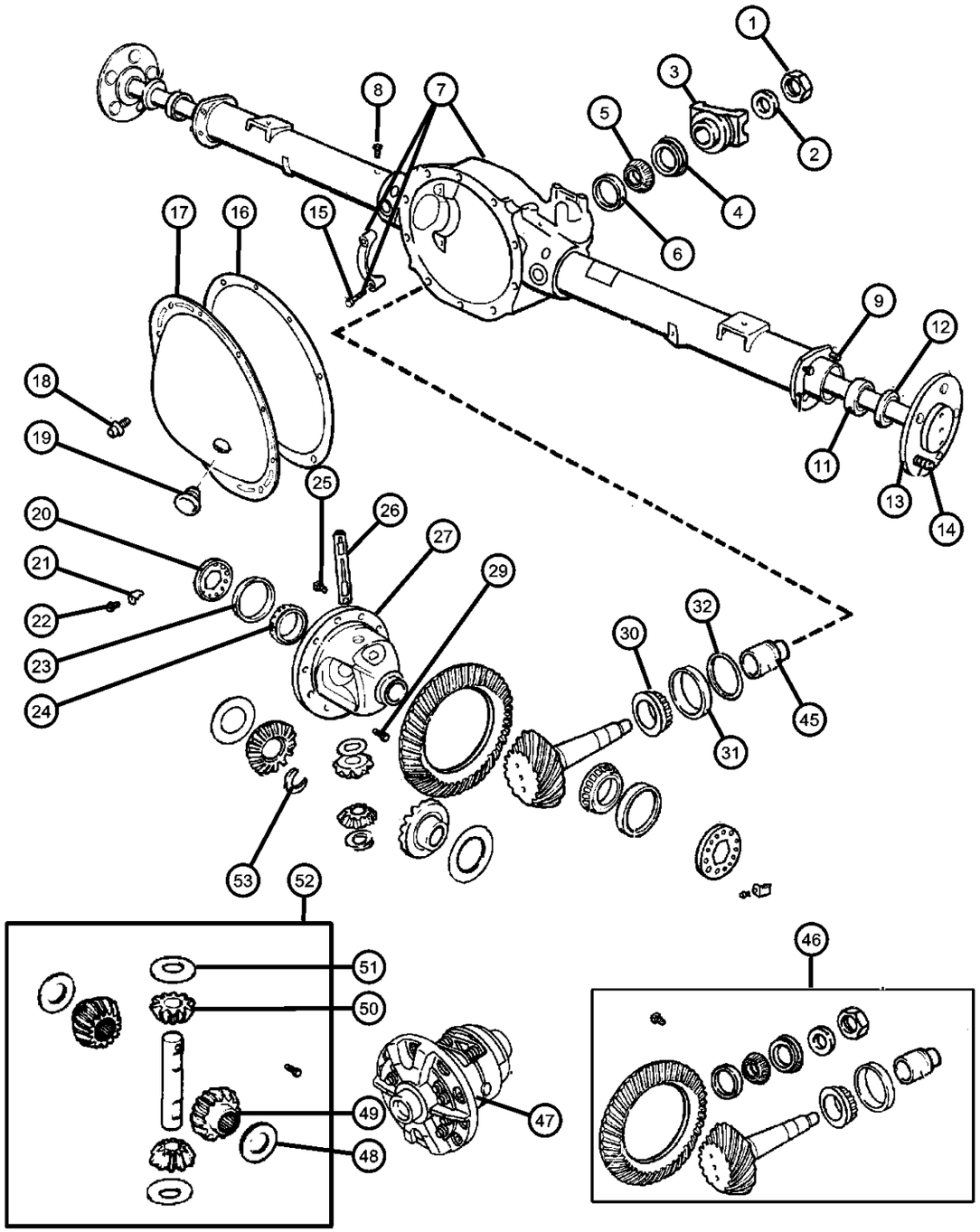

ITEM	PART NUMBER	QTY	LINE	SERIES	BODY	ENGINE	TRANS	TRIM	DESCRIPTION
49									GEAR, Differential, Also Serviced In Differential Gear Package
	52069429	2	1						[-DSA]
		2	5						[-DSA]
50									PINION, Differential, Also Serviced In Differential Gear Package
	52069655	2	1						[-DSA]
		2	5						[-DSA]
51									WASHER, Pinion Thrust, Also Serviced In Differential Gear Package
	02852912	2	1						[-DSA]
		2	5						[-DSA]
52									GEAR PACKAGE, Differential
	04883087	1	1						[-DSA]
		1	5						[-DSA]
53									RETAINER, Axle Shaft
	52069426	2	1						
		2	5						

DAKOTA (AN)

SERIES	LINE	BODY	ENGINE	TRANSMISSION
L = Quad Cab	1 = Dakota 2WD	31 = CLUB CAB 2-DR 6.5 FT BOX	EPO = 2.5L 4 Cyl.	DDC = TRANSMISSION - 5-SPEED HD MANUAL
L = Regular Cab	5 = Dakota 4WD	61 = REG CAB 6.5 FT BOX	EHO = 3.9L 6 Cyl.	DG4 = TRANSMISSION-MULTI-SPEED AUTO, 45RFE
L = Club Cab		84 = CREW CAB 4-DR W.B.1	EMO = 5.9L 8 Cyl.	DGK = TRANSMISSION - 4-SPD. AUTOMATIC,42RE
			EVO = 4.7L Magnum	DGT = TRANSMISSION - 4-SPD. AUTOMATIC,46RE
			EHC = 3.9L SMPI V6	DGO = AUTO. TRANS.
			EML = 5.9L V8 MPI Engine	
			EPE = 2.5L POWER TECH I-4 Cyl.	
			EVA = 4.7L V8 MPI	

Axle,Rear,with Differential and Carrier,Chrysler Model 9.25
Figure 3-220

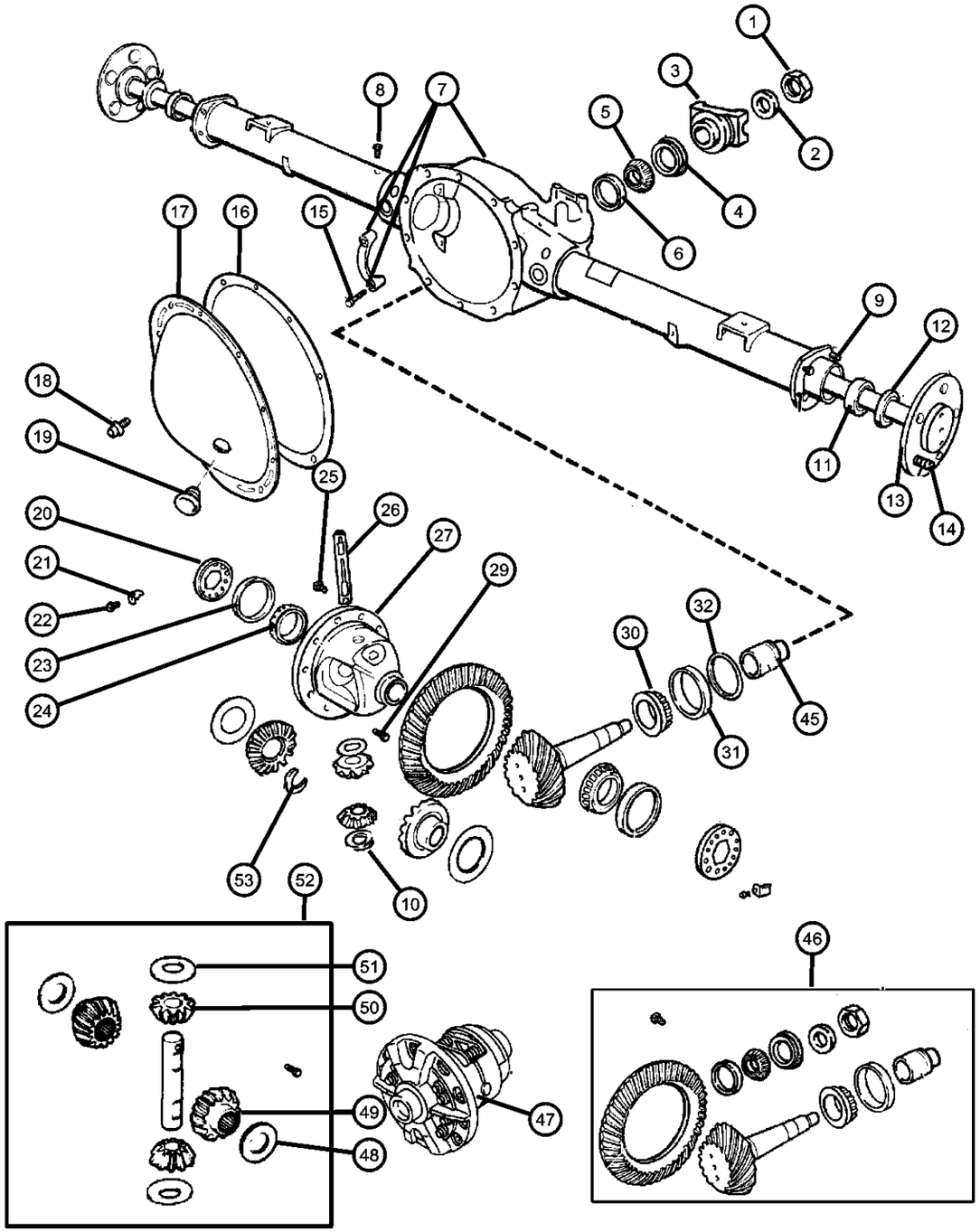

ITEM	PART NUMBER	QTY	LINE	SERIES	BODY	ENGINE	TRANS	TRIM	DESCRIPTION
06Note:DRB =9.25 Chrysler Axle—DMD=3.55 Axle Ratio—DMH=3.92 Axle Ratio—DSA= Anti-Spin Differential									
1									NUT, Pinion Yoke
	06028041	1	5						
		1	1						
2									WASHER, Pinion Yoke
	02070117	1	1						
		1	5						
3									FLANGE, Driveshaft Yoke
	52105064	1	1						
		1	5						
4									SEAL, Drive Pinion
	52070340AA	1	1						
		1	5						
5									BEARING, Drive Pinion
	01820552	1	1						Front
		1	5						Front
6									CUP, Pinion Bearing
	01820551	1	1						Front
		1	5						Front
7									HOUSING, Axle
	05003676AB	1	1						
	05003678AB	1	5						
8									VENT, Axle
	52069896AA	1	1						
		1	5						
9									STUD
	03723668	8	1						Axle Housing to Backing Plate, Mounting
		8	5						Axle Housing to Backing Plate, Mounting
10									NUT, Hex Flange Lock
	00152345	8	1						Axle Housing to Backing Plate, Mounting

DAKOTA (AN)

SERIES	LINE	BODY	ENGINE	TRANSMISSION
L = Quad Cab	1 = Dakota 2WD	31 = CLUB CAB 2-DR 6.5 FT BOX	EPO = 2.5L 4 Cyl.	DDC = TRANSMISSION - 5-SPEED HD MANUAL
L = Regular Cab	5 = Dakota 4WD	61 = REG CAB 6.5 FT BOX	EHO = 3.9L 6 Cyl.	DG4 = TRANSMISSION-MULTI-SPEED AUTO, 45RFE
L = Club Cab		84 = CREW CAB 4-DR W.B.1	EMO = 5.9L 8 Cyl.	DGK = TRANSMISSION - 4-SPD. AUTOMATIC,42RE
			EVO = 4.7L Magnum	DGT = TRANSMISSION - 4-SPD. AUTOMATIC,46RE
			EHC = 3.9L SMPI V6	DGO = AUTO. TRANS.
			EML = 5.9L V8 MPI Engine	
			EPE = 2.5L POWER TECH I-4 Cyl.	
			EVA = 4.7L V8 MPI	

Axle,Rear,with Differential and Carrier,Chrysler Model 9.25
Figure 3-220

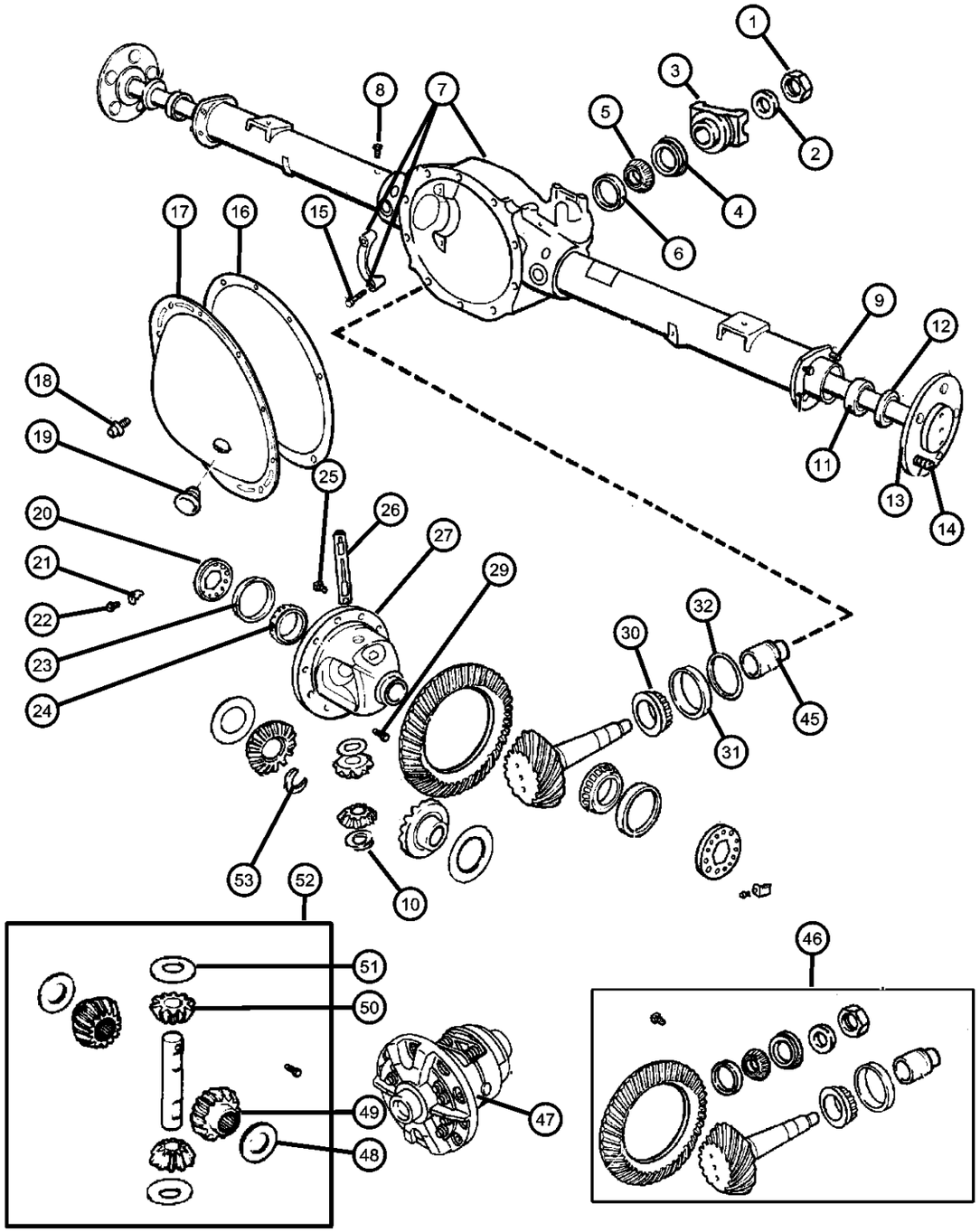

ITEM	PART NUMBER	QTY	LINE	SERIES	BODY	ENGINE	TRANS	TRIM	DESCRIPTION
		1	5						Axle Housing to Backing Plate, Mounting
11									BEARING, Wheel
	03507898AB	2	1						
		2	5						
12									SEAL, Axle Drive Shaft
	52070427AA	2	1						
		2	5						
13									SHAFT, Axle
	52069388	1	1						Right
		1	5						Right
	52069389	1	1						Left
		1	5						Left
14									STUD, Wheel
	06036123AA	12	1						
		12	5						
15									SCREW, Hex Head, .50-13x2.38
	03432695	4	1						Carrier Bearing Cap, Mounting
		4	5						Carrier Bearing Cap, Mounting
16									SEALANT, RTV
	05010884AA	1	5						
		1	1						
17									COVER, Differential
	04384293AC	1	1						
		1	5						
18									SCREW AND WASHER, Hex Flange Head, .312-18x.562
	06033043	12	1						Differential Cover, Mounting
		12	5						Differential Cover, Mounting
19									PLUG, Differential Cover
	52070428AA	1	1						
		1	5						
20									ADJUSTER, Differential Bearing

DAKOTA (AN)

SERIES	LINE	BODY	ENGINE	TRANSMISSION
L = Quad Cab	1 = Dakota 2WD	31 = CLUB CAB 2-DR 6.5 FT BOX	EPO = 2.5L 4 Cyl.	DDC = TRANSMISSION - 5-SPEED HD MANUAL
L = Regular Cab	5 = Dakota 4WD	61 = REG CAB 6.5 FT BOX	EHO = 3.9L 6 Cyl.	DG4 = TRANSMISSION-MULTI-SPEED AUTO, 45RFE
L = Club Cab		84 = CREW CAB 4-DR W.B.1	EMO = 5.9L 8 Cyl.	DGK = TRANSMISSION - 4-SPD. AUTOMATIC,42RE
			EVO = 4.7L Magnum	DGT = TRANSMISSION - 4-SPD. AUTOMATIC,46RE
			EHC = 3.9L SMPI V6	DGO = AUTO. TRANS.
			EML = 5.9L V8 MPI Engine	
			EPE = 2.5L POWER TECH I-4 Cyl.	
			EVA = 4.7L V8 MPI	

Axle,Rear,with Differential and Carrier,Chrysler Model 9.25
Figure 3-220

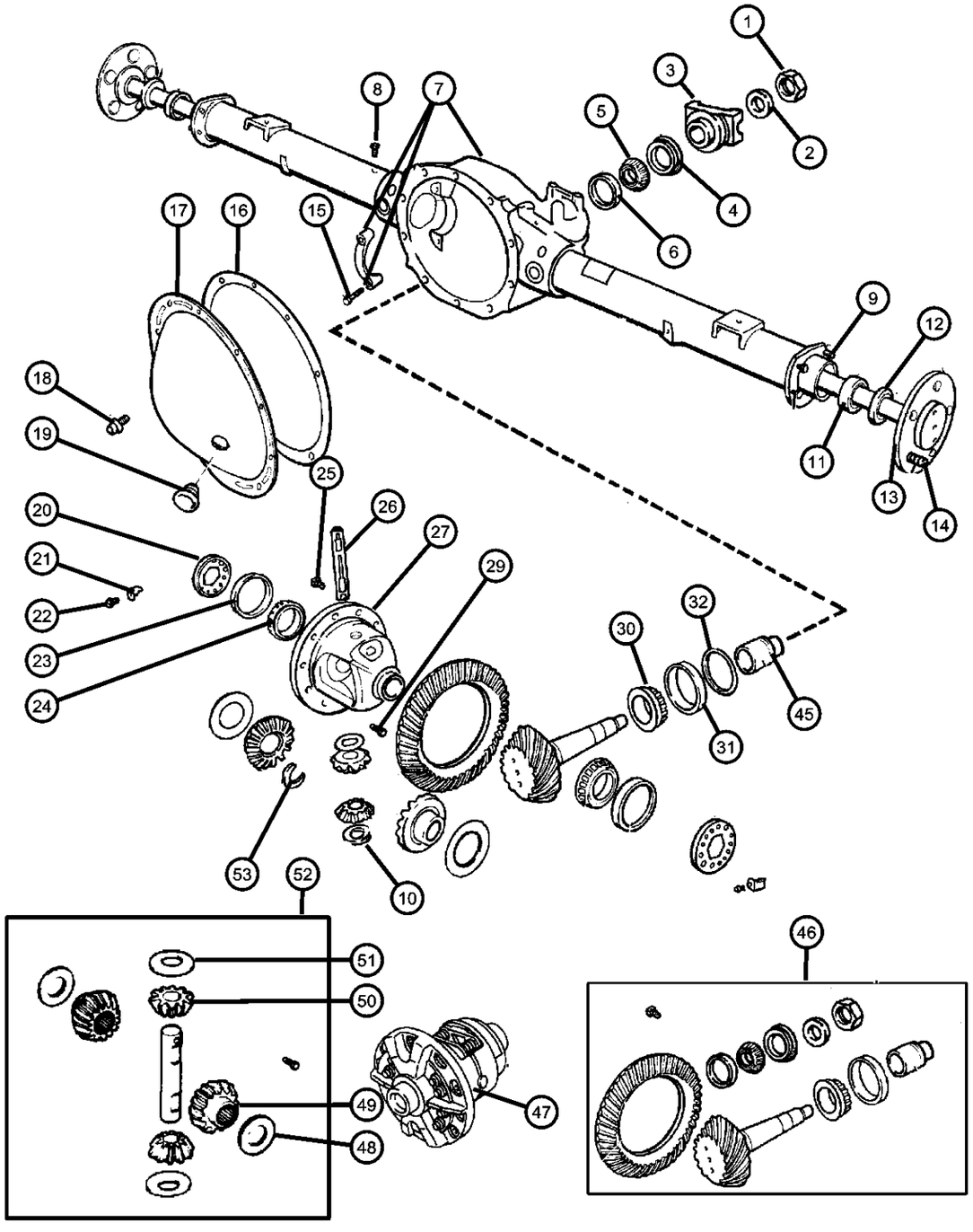

ITEM	PART NUMBER	QTY	LINE	SERIES	BODY	ENGINE	TRANS	TRIM	DESCRIPTION
	52070443AA	2	1						
		2	5						
21									LOCK, Differential Bearing
	03723858	2	1						
		2	5						
22									SCREW AND WASHER, Hex Head, .25-20x.50
	06023092	2	1						Differential Bearing Lock
		2	5						Differential Bearing Lock
23									CUP, Differential Side
	03723148	2	1						
		2	5						
24									BEARING, Differential
	03723149	2	1						
		2	5						
25									SCREW, Hex Flange Head, .437-20x.88
	06036054AA	12	1						Ring Gear, Mounting
		12	5						Ring Gear, Mounting
26									SHAFT, Differential, Also Serviced In Differential Gear Package
	01633928	1	1						[-DSA]
		1	5						[-DSA]
27									CASE, Differential
	04384222	1	1						[-DSA] without Internal Parts
		1	5						[-DSA] without Internal Parts
-28									TONE RING, Sensor
	04384227	1	1						
		1	5						
29									SCREW, Hex Head, .312-18x1.80, Also Serviced in Differential Gear Package
	03507724	2	1						
		2	5						

DAKOTA (AN)

SERIES	LINE	BODY	ENGINE	TRANSMISSION
L = Quad Cab L = Regular Cab L = Club Cab	1 = Dakota 2WD 5 = Dakota 4WD	31 = CLUB CAB 2-DR 6.5 FT BOX 61 = REG CAB 6.5 FT BOX 84 = CREW CAB 4-DR W.B.1	EPO = 2.5L 4 Cyl. EHO = 3.9L 6 Cyl. EMO = 5.9L 8 Cyl. EVO = 4.7L Magnum EHC = 3.9L SMPI V6 EML = 5.9L V8 MPI Engine EPE = 2.5L POWER TECH I-4 Cyl. EVA = 4.7L V8 MPI	DDC = TRANSMISSION - 5-SPEED HD MANUAL DG4 = TRANSMISSION-MULTI-SPEED AUTO, 45RFE DGK = TRANSMISSION - 4-SPD. AUTOMATIC,42RE DGT = TRANSMISSION - 4-SPD. AUTOMATIC,46RE DGO = AUTO. TRANS.

AR = use ase required - = Non illustrrated part

<< RETURN TO GROUP INDEX

Axle,Rear,with Differential and Carrier,Chrysler Model 9.25
Figure 3-220

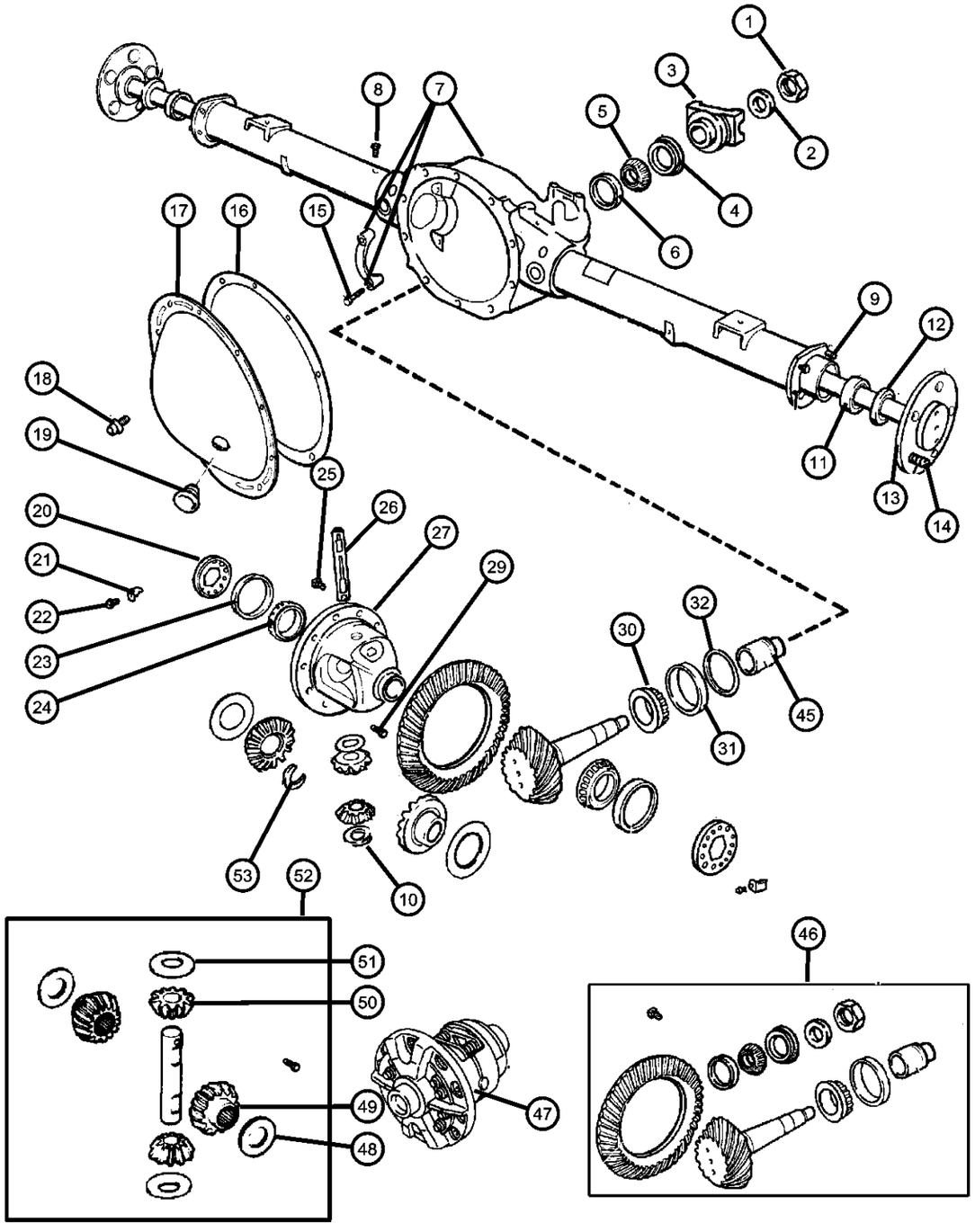

ITEM	PART NUMBER	QTY	LINE	SERIES	BODY	ENGINE	TRANS	TRIM	DESCRIPTION
30									BEARING, Drive Pinion
	02852731	1	1						Rear
		1	5						Rear
31									CUP, Pinion Bearing
	02852732	1	1						Rear
		1	5						Rear
32									SHIM, Drive Pinion Bearing, 0.020
	03432320	AR	1						
		AR	5						
-33									SHIM, Drive Pinion Bearing, 0.022
	03432322	AR	1						
		AR	5						
-34									SHIM, Drive Pinion Bearing, 0.024
	03432324	AR	1						
		AR	5						
-35									SHIM, Drive Pinion Bearing, 0.026
	03432326	AR	1						
		AR	5						
-36									SHIM, Drive Pinion Bearing, 0.027
	03432327	AR	1						
		AR	5						
-37									SHIM, Drive Pinion Bearing, 0.028
	03432328	AR	1						
		AR	5						
-38									SHIM, Drive Pinion Bearing, 0.029
	03432329	AR	1						
		AR	5						
-39									SHIM, Drive Pinion Bearing, 0.030
	03432330	AR	1						
		AR	5						
-40									SHIM, Drive Pinion Bearing, 0.031

DAKOTA (AN)

SERIES	LINE	BODY	ENGINE	TRANSMISSION
L = Quad Cab L = Regular Cab L = Club Cab	1 = Dakota 2WD 5 = Dakota 4WD	31 = CLUB CAB 2-DR 6.5 FT BOX 61 = REG CAB 6.5 FT BOX 84 = CREW CAB 4-DR W.B.1	EPO = 2.5L 4 Cyl. EHO = 3.9L 6 Cyl. EMO = 5.9L 8 Cyl. EVO = 4.7L Magnum EHC = 3.9L SMPI V6 EML = 5.9L V8 MPI Engine EPE = 2.5L POWER TECH I-4 Cyl. EVA = 4.7L V8 MPI	DDC = TRANSMISSION - 5-SPEED HD MANUAL DG4 = TRANSMISSION-MULTI-SPEED AUTO, 45RFE DGK = TRANSMISSION - 4-SPD. AUTOMATIC,42RE DGT = TRANSMISSION - 4-SPD. AUTOMATIC,46RE DGO = AUTO. TRANS.

AR = use ase required - = Non illustrrated part

Axle,Rear,with Differential and Carrier,Chrysler Model 9.25
Figure 3-220

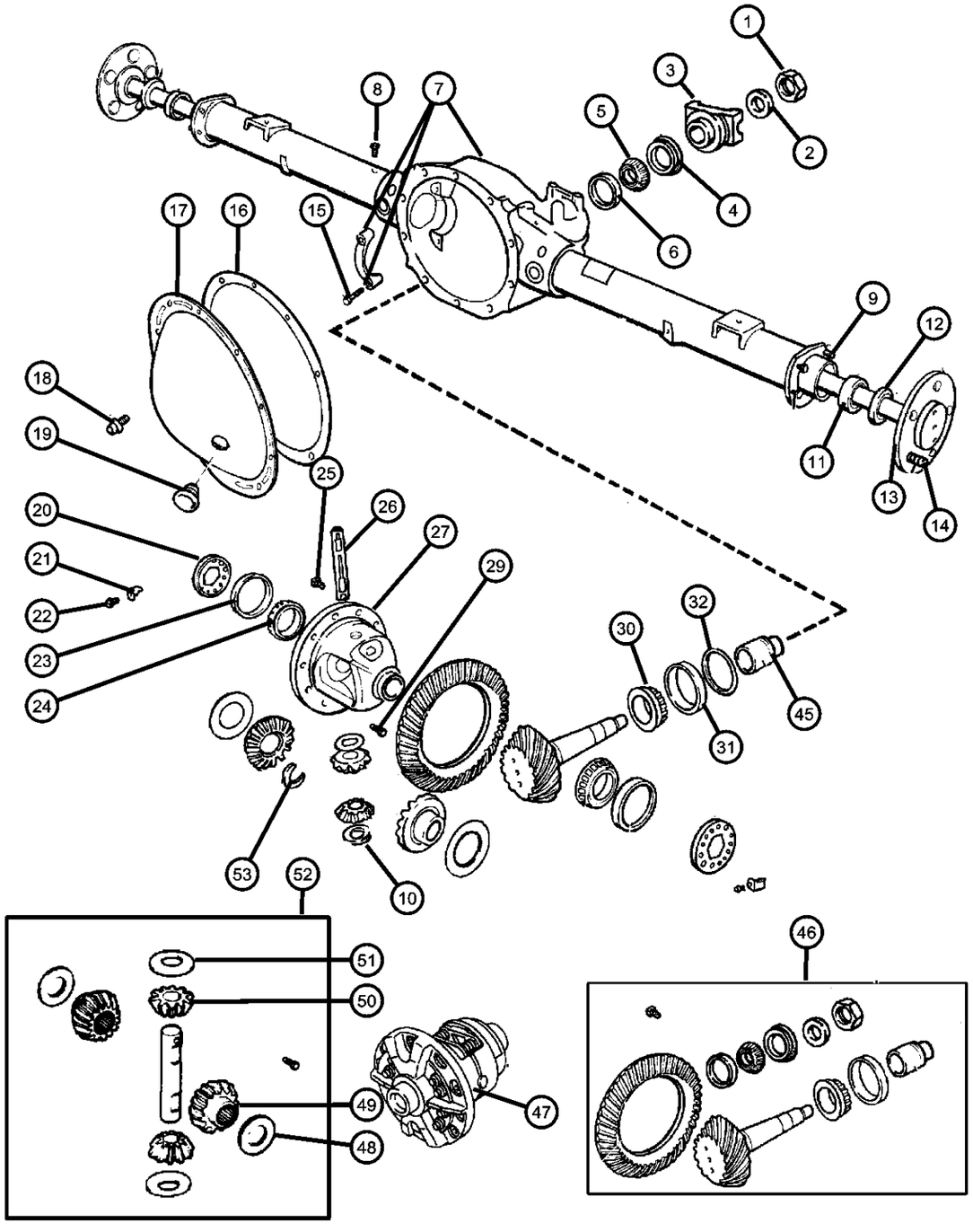

ITEM	PART NUMBER	QTY	LINE	SERIES	BODY	ENGINE	TRANS	TRIM	DESCRIPTION
	03432331	AR	1						
		AR	5						
-41									SHIM, Drive Pinion Bearing, 0.032
	03432332	AR	1						
		AR	5						
-42									SHIM, Drive Pinion Bearing, 0.034
	03432334	AR	1						
		AR	5						
-43									SHIM, Drive Pinion Bearing, 0.036
	03432336	AR	1						
		AR	5						
-44									SHIM, Drive Pinion Bearing, 0.038
	03432338	AR	1						
		AR	5						
45									SPACER, Drive Pinion Bearing
	03507678	1	1						Crush
		1	5						Crush
46									GEAR KIT, Ring And Pinion
	05010321AB	1	1						[DMH]
		1	5						[DMH]
	05010322AD	1	1						[DMD]
		1	5						[DMD]
47									CASE, Differential
	52068450	1	1						[+DSA] with Internal Parts
		1	5						[+DSA] with Internal Parts
48									WASHER PACKAGE, Side Gear Thrust, Also Serviced In Differential Gear Package
	04131294	1	1						[-DSA]
		1	5		31, 61, 84				[-DSA]
49		1							GEAR, Differential, Serviced In Differential Gear Package Only, (NOT SERVICED),

DAKOTA (AN)

SERIES	LINE	BODY	ENGINE	TRANSMISSION
L = Quad Cab L = Regular Cab L = Club Cab	1 = Dakota 2WD 5 = Dakota 4WD	31 = CLUB CAB 2-DR 6.5 FT BOX 61 = REG CAB 6.5 FT BOX 84 = CREW CAB 4-DR W.B.1	EPO = 2.5L 4 Cyl. EHO = 3.9L 6 Cyl. EMO = 5.9L 8 Cyl. EVO = 4.7L Magnum EHC = 3.9L SMPI V6 EML = 5.9L V8 MPI Engine EPE = 2.5L POWER TECH I-4 Cyl. EVA = 4.7L V8 MPI	DDC = TRANSMISSION - 5-SPEED HD MANUAL DG4 = TRANSMISSION-MULTI-SPEED AUTO, 45RFE DGK = TRANSMISSION - 4-SPD. AUTOMATIC,42RE DGT = TRANSMISSION - 4-SPD. AUTOMATIC,46RE DGO = AUTO. TRANS.

AR = use ase required - = Non illustrrated part

<< RETURN TO GROUP INDEX

Axle,Rear,with Differential and Carrier,Chrysler Model 9.25
Figure 3-220

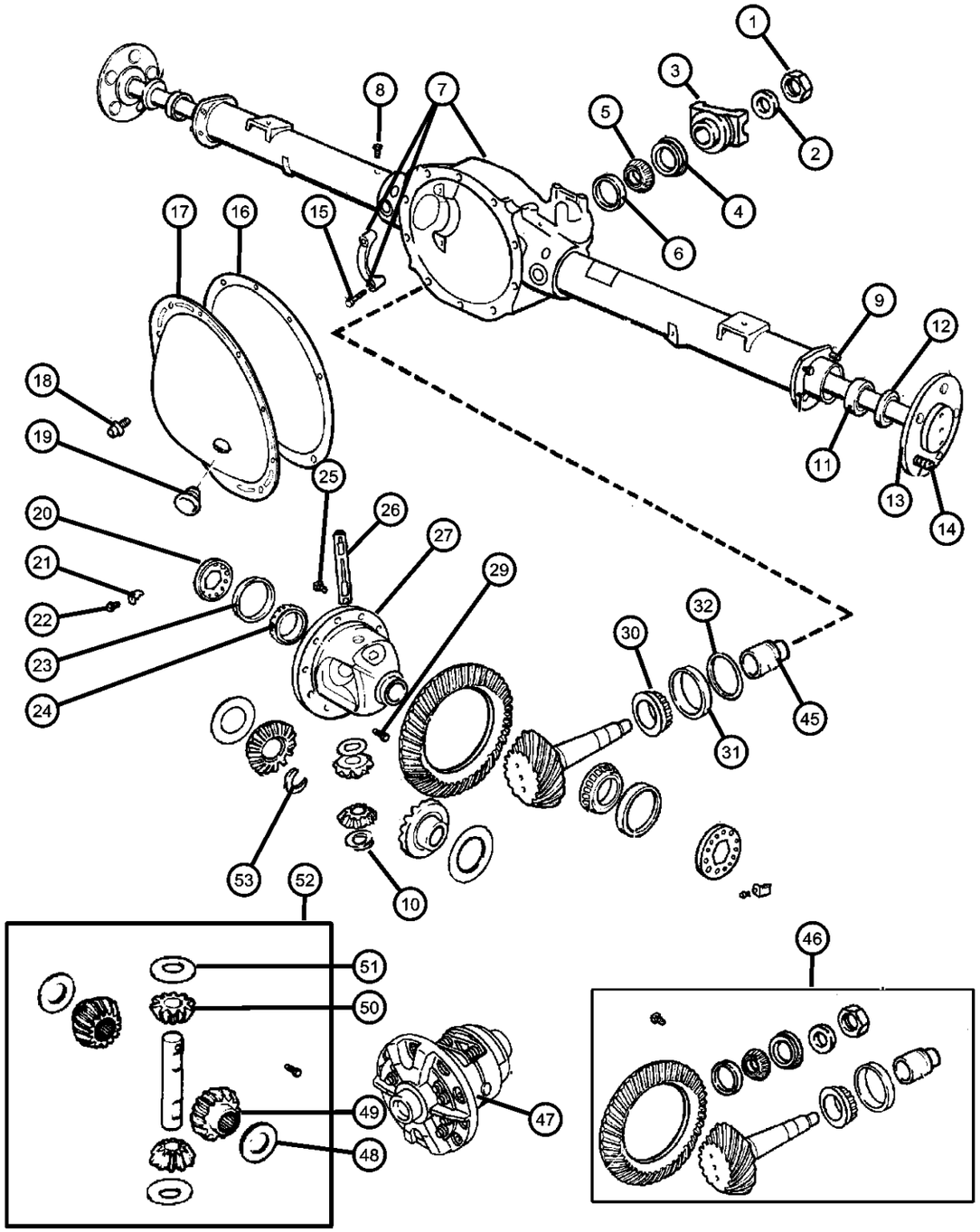

ITEM	PART NUMBER	QTY	LINE	SERIES	BODY	ENGINE	TRANS	TRIM	DESCRIPTION
50		1							PINION, Differential, Serviced In Differential Gear Package Only, (NOT SERVICED)
51									WASHER, Pinion Thrust, Also Serviced In Differential Gear Package
	03507641	2	1						[-DSA]
		2	5						[-DSA]
52									GEAR PACKAGE, Differential
	04798912	1	1						[-DSA]
		1	5						[-DSA]
53									LOCK, Drive Shaft
	04137669	2	1						
		2	5						

DAKOTA (AN)

SERIES	LINE	BODY	ENGINE	TRANSMISSION
L = Quad Cab	1 = Dakota 2WD	31 = CLUB CAB 2-DR 6.5 FT BOX	EPO = 2.5L 4 Cyl.	DDC = TRANSMISSION - 5-SPEED HD MANUAL
L = Regular Cab	5 = Dakota 4WD	61 = REG CAB 6.5 FT BOX	EHO = 3.9L 6 Cyl.	DG4 = TRANSMISSION-MULTI-SPEED AUTO, 45RFE
L = Club Cab		84 = CREW CAB 4-DR W.B.1	EMO = 5.9L 8 Cyl.	DGK = TRANSMISSION - 4-SPD. AUTOMATIC,42RE
			EVO = 4.7L Magnum	DGT = TRANSMISSION - 4-SPD. AUTOMATIC,46RE
			EHC = 3.9L SMPI V6	DGO = AUTO. TRANS.
			EML = 5.9L V8 MPI Engine	
			EPE = 2.5L POWER TECH I-4 Cyl.	
			EVA = 4.7L V8 MPI	

Vent,Axle
Figure 3-310

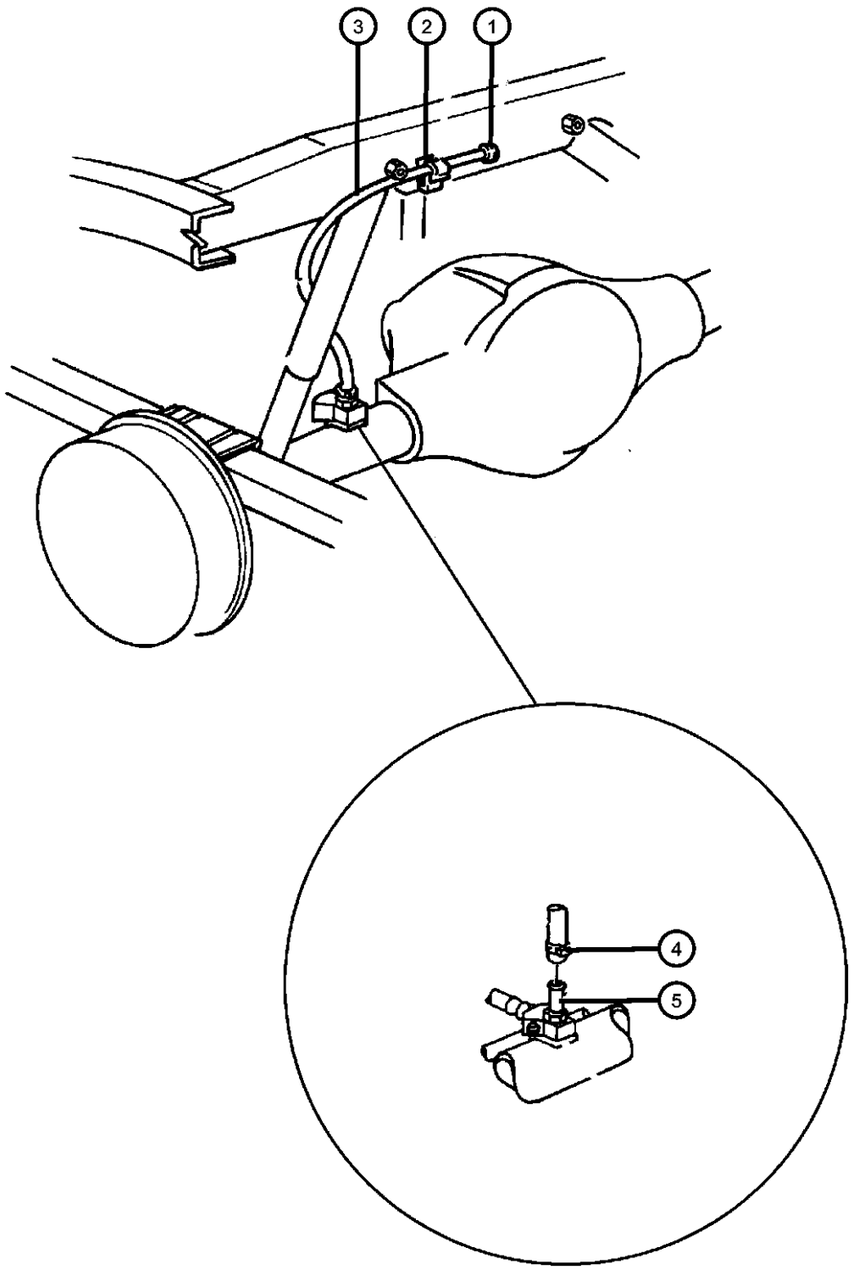

ITEM	PART NUMBER	QTY	LINE	SERIES	BODY	ENGINE	TRANS	TRIM	DESCRIPTION
1	52067516	1							CAP, Rear Axle Vent
2	34175327	1							CLIP, Conduit Convoluted
3	52099476AA	1							HOSE, Axle Vent
4	00153455	1	5		31, 61, 84				CLAMP, Hose, .620
5									VENT, Axle
	52069896AA	1	1						
		1	5						

DAKOTA (AN)

SERIES	LINE	BODY	ENGINE	TRANSMISSION
L = Quad Cab L = Regular Cab L = Club Cab	1 = Dakota 2WD 5 = Dakota 4WD	31 = CLUB CAB 2-DR 6.5 FT BOX 61 = REG CAB 6.5 FT BOX 84 = CREW CAB 4-DR W.B.1	EPO = 2.5L 4 Cyl. EHO = 3.9L 6 Cyl. EMO = 5.9L 8 Cyl. EVO = 4.7L Magnum EHC = 3.9L SMPI V6 EML = 5.9L V8 MPI Engine EPE = 2.5L POWER TECH I-4 Cyl. EVA = 4.7L V8 MPI	DDC = TRANSMISSION - 5-SPEED HD MANUAL DG4 = TRANSMISSION-MULTI-SPEED AUTO, 45RFE DGK = TRANSMISSION - 4-SPD. AUTOMATIC,42RE DGT = TRANSMISSION - 4-SPD. AUTOMATIC,46RE DGO = AUTO. TRANS.

Group - 4

Parking Brake

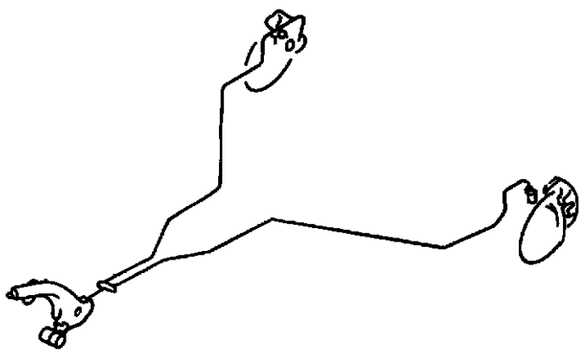

004-100 Parking Brake Lever and Cables 			

Group - 4 Parking Brake

Illustration Title — Group-Fig. No.

Parking Brake Lever and Cables

Parking Brake Lever ..... Fig. 4 - 110
Parking Brake Cables ..... Fig. 4 - 120

Parking Brake Lever
Figure 4-110

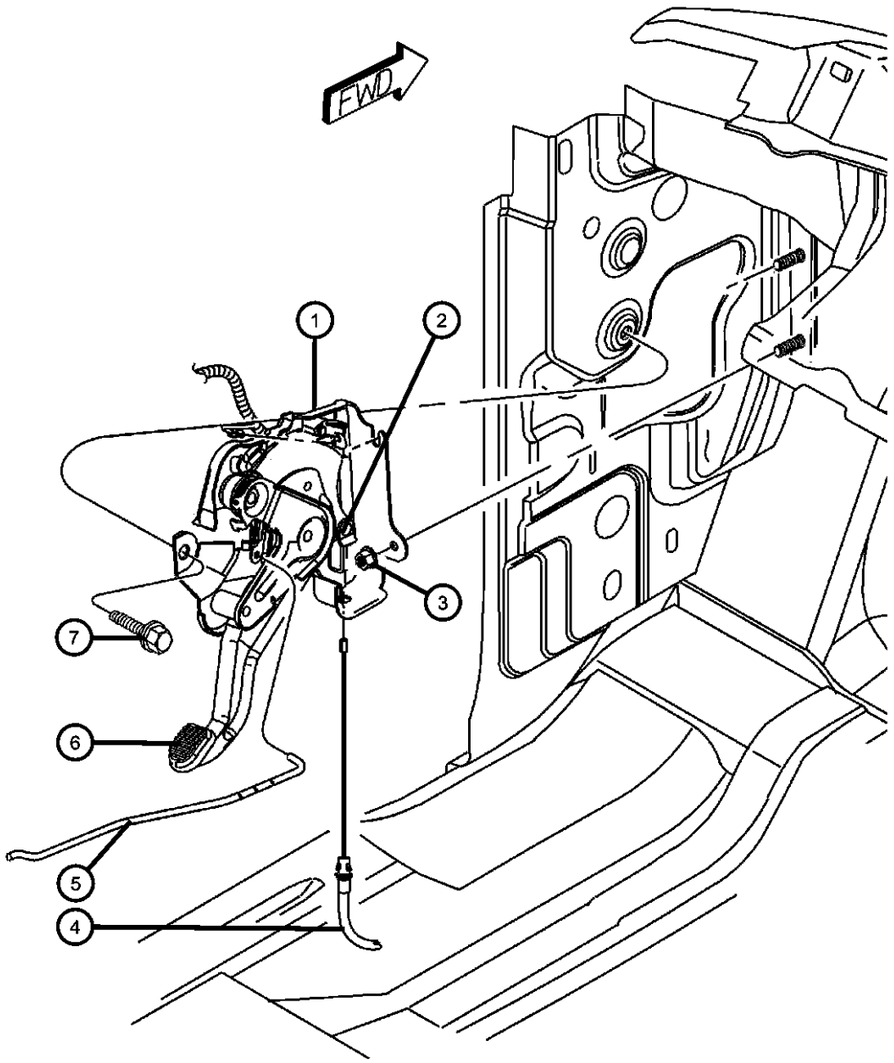

ITEM	PART NUMBER	QTY	LINE	SERIES	BODY	ENGINE	TRANS	TRIM	DESCRIPTION
1	52078976AG	1							LEVER, Park Brake, Includes Pedal Pad and Parking Brake Switch
2	04221463	1							SWITCH, Parking Brake
3	34201711	2							NUT, Hex Flange, M8x1.25, Park Brake Lever to Dash Panel, Mounting
4									CABLE, Parking Brake
	52009869AB	1			84				Front
		1			31, 61				Front
5	52078977AC	1							ROD, Parking Brake Release
6	04019175	1							PAD, Parking Brake Pedal
7	06102153AA	1							SCREW, Tapping, M8x20, Park Brake Lever to Left Cowl Panel, Mounting

DAKOTA (AN)

SERIES	LINE	BODY	ENGINE	TRANSMISSION
L = Quad Cab L = Regular Cab L = Club Cab	1 = Dakota 2WD 5 = Dakota 4WD	31 = CLUB CAB 2-DR 6.5 FT BOX 61 = REG CAB 6.5 FT BOX 84 = CREW CAB 4-DR W.B.1	EPO = 2.5L 4 Cyl. EHO = 3.9L 6 Cyl. EMO = 5.9L 8 Cyl. EVO = 4.7L Magnum EHC = 3.9L SMPI V6 EML = 5.9L V8 MPI Engine EPE = 2.5L POWER TECH I-4 Cyl. EVA = 4.7L V8 MPI	DDC = TRANSMISSION - 5-SPEED HD MANUAL DG4 = TRANSMISSION-MULTI-SPEED AUTO, 45RFE DGK = TRANSMISSION - 4-SPD. AUTOMATIC,42RE DGT = TRANSMISSION - 4-SPD. AUTOMATIC,46RE DGO = AUTO. TRANS.

Parking Brake Cables
Figure 4-120

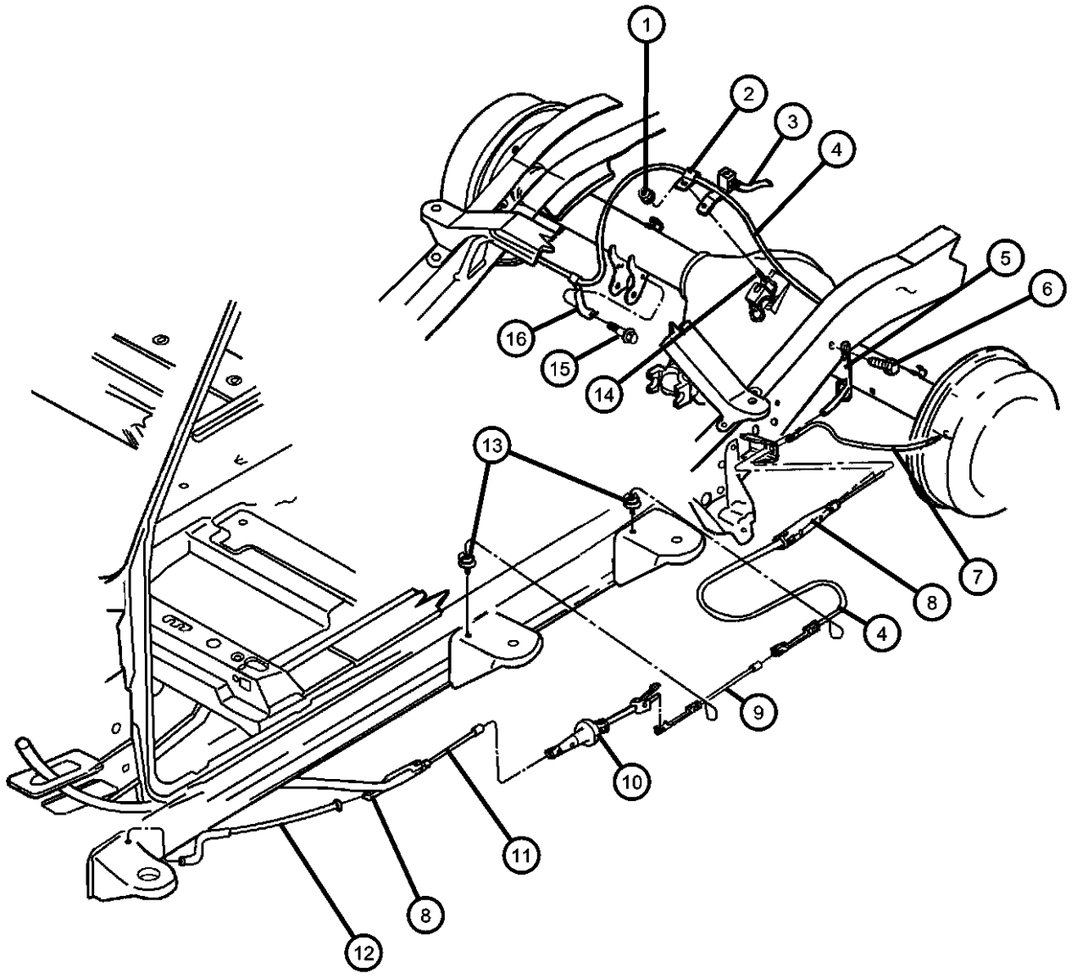

ITEM	PART NUMBER	QTY	LINE	SERIES	BODY	ENGINE	TRANS	TRIM	DESCRIPTION
1	00152472	1							NUT, Hex Flange Lock, .312-18, Locking Clip to RWAL Stud, Mounting
2	00152472	1							CLIP, Brake Cable, 23x45x.76, Order #4, (NOT SERVICED)
3	52008984AE	1							HOSE, Brake
4									CABLE, Parking Brake
	52009870AB	1			84				Right Rear
		1			31, 61				Right Rear
5	52009772AB	1							GUIDE, Parking Brake Cable
6	34201888	1							SCREW, Hex Head
7									CABLE, Parking Brake
	52009871AA	1	1						Left Rear
	52009872AA	1	5						Left Rear
8	52009494	2							CONNECTOR, Parking Brake Cable
9	52009086	1			31, 84				CABLE, Parking Brake Extension
10									TENSIONER, Parking Brake Cable
	52009868AD	1			31, 61				
		1			84				
	52010096AC	1							
11									CABLE, Parking Brake
	52009869AB	1			84				Front
		1			31, 61				Front
12									CABLE, Parking Brake Extension
	52009273AB	1			84				
		1			31, 61				
13	32000404	1	5						CABLE, Parking Brake Extension
14	06035887	1							STUD, Double Ended, .312-18/.312-18x2.00, Sensor,Cover and Bracket Clip to Rear Axle
15	34201888	1							SCREW, Hex Head
16	34201888	1							CLAMP, Cable, Order #4, (NOT SERVICED)

DAKOTA (AN)

SERIES	LINE	BODY	ENGINE	TRANSMISSION
L = Quad Cab L = Regular Cab L = Club Cab	1 = Dakota 2WD 5 = Dakota 4WD	31 = CLUB CAB 2-DR 6.5 FT BOX 61 = REG CAB 6.5 FT BOX 84 = CREW CAB 4-DR W.B.1	EPO = 2.5L 4 Cyl. EHO = 3.9L 6 Cyl. EMO = 5.9L 8 Cyl. EVO = 4.7L Magnum EHC = 3.9L SMPI V6 EML = 5.9L V8 MPI Engine EPE = 2.5L POWER TECH I-4 Cyl. EVA = 4.7L V8 MPI	DDC = TRANSMISSION - 5-SPEED HD MANUAL DG4 = TRANSMISSION-MULTI-SPEED AUTO, 45RFE DGK = TRANSMISSION - 4-SPD. AUTOMATIC,42RE DGT = TRANSMISSION - 4-SPD. AUTOMATIC,46RE DGO = AUTO. TRANS.

Group - 5

Service Brakes

005-100 Front Brakes 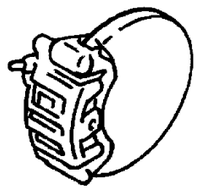	**005-200** Rear Brakes 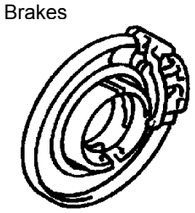	**005-300** Power Brake Booster 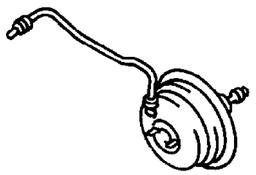	**005-400** Brake Master Cylinder 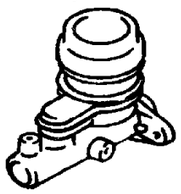
005-500 Brake Lines and Hoses 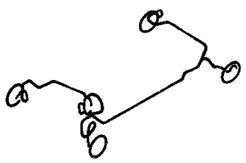	**005-600** Brake Pedals 		

Group - 5 Service Brakes

Illustration Title — Group-Fig. No.

Front Brakes
Brakes,Front ..... Fig. 5 - 110

Rear Brakes
Brakes,Rear,9 Inches x 2.5 Inches ..... Fig. 5 - 210
Brakes,Rear,11 Inches x 2.25 Inches ..... Fig. 5 - 220

Power Brake Booster
Booster,Power Brake ..... Fig. 5 - 310

Brake Master Cylinder
Master Cylinder,Brake ..... Fig. 5 - 410

Brake Lines and Hoses
Lines,Brake,From EHCU or RWAL II to Frame-AN 1,AN 5 ..... Fig. 5 - 510
Lines and Hoses,Front-AN 1 ..... Fig. 5 - 520
Lines and Hoses,Front-AN 5 ..... Fig. 5 - 530
Lines and Hoses,Rear and Chassis ..... Fig. 5 - 540

Brake Pedals
Pedals,Brake and Clutch ..... Fig. 5 - 610

Brakes,Front
Figure 5-110

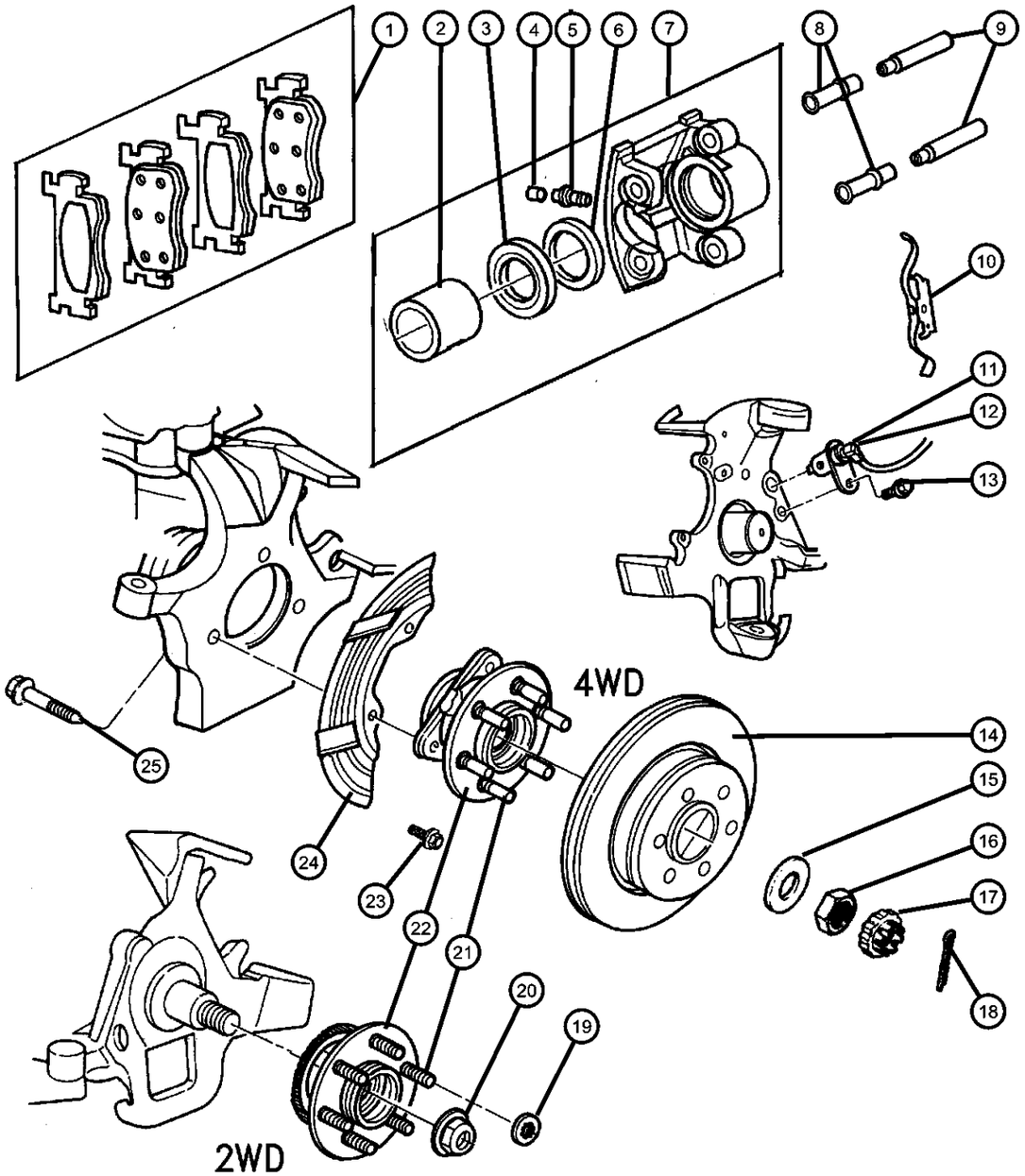

ITEM	PART NUMBER	QTY	LINE	SERIES	BODY	ENGINE	TRANS	TRIM	DESCRIPTION
Note:BGJ=Power Disc/Drum (R.W.A.L.)—BGK= 4-Wheel Anti-Lock Brakes (A.W.A.L.)									
1	05016167AA	1							PAD KIT, Front Disc Brake
	V1013167								Mopar V-Line Alternative Part
	VDN13167								Make It New Brake Kits
	BHKH5568								Mopar V-Line Alternative Part Disc Hardware
	BHKH5025								Mopar V-Line Alternative Part Caliper Bolts
	VOE13167								Make It Original Brake Kit
	VK616869AA								Mopar Loaded Brake Caliper Kit (2 Calipers, Brake Friction)
	V3010820								Mopar V-Line Alternative Part Ceramic
2	05003794AA	1							PISTON, Brake
3	05003795AA	1							BOOT, Brake Piston
4	04126733	1							CAP, Bleeder
5	04126879	1							BLEEDER SCREW, Brake
6	05003796AA	1							SEAL, Caliper Piston
7									CALIPER, Disc Brake
	05016168AA	1							Right
	VK616869AA								Mopar Loaded Brake Caliper Kit (2 Calipers, Brake Friction)
	05016169AA	1							Left
	VK616869AA								Mopar Loaded Brake Caliper Kit (2 Calipers, Brake Friction)
8	04886074AA	2							BUSHING, Caliper
9	04886075AA	2							PIN, Caliper
10	52010170AB	2							CLIP, Brake Caliper, Caliper Retention Spring
11									SENSOR, Anti-Lock Brake
	56027921AD	1	1						Left
	56027924AE	1	1		31, 61, 84				Upto and Including 03-29-00, Right
	56027924AG	1	1						03-30-00 and After, Right
12									SENSOR KIT, Anti-Lock Brakes
	05016338AA	1	5						Comes with Mounting Bolt, Right
	05016339AA	1	5						Comes with Mounting Bolt, Left

DAKOTA (AN)

SERIES	LINE	BODY	ENGINE	TRANSMISSION
L = Quad Cab L = Regular Cab L = Club Cab	1 = Dakota 2WD 5 = Dakota 4WD	31 = CLUB CAB 2-DR 6.5 FT BOX 61 = REG CAB 6.5 FT BOX 84 = CREW CAB 4-DR W.B.1	EPO = 2.5L 4 Cyl. EHO = 3.9L 6 Cyl. EMO = 5.9L 8 Cyl. EVO = 4.7L Magnum EHC = 3.9L SMPI V6 EML = 5.9L V8 MPI Engine EPE = 2.5L POWER TECH I-4 Cyl. EVA = 4.7L V8 MPI	DDC = TRANSMISSION - 5-SPEED HD MANUAL DG4 = TRANSMISSION-MULTI-SPEED AUTO, 45RFE DGK = TRANSMISSION - 4-SPD. AUTOMATIC,42RE DGT = TRANSMISSION - 4-SPD. AUTOMATIC,46RE DGO = AUTO. TRANS.

Brakes,Front
Figure 5-110

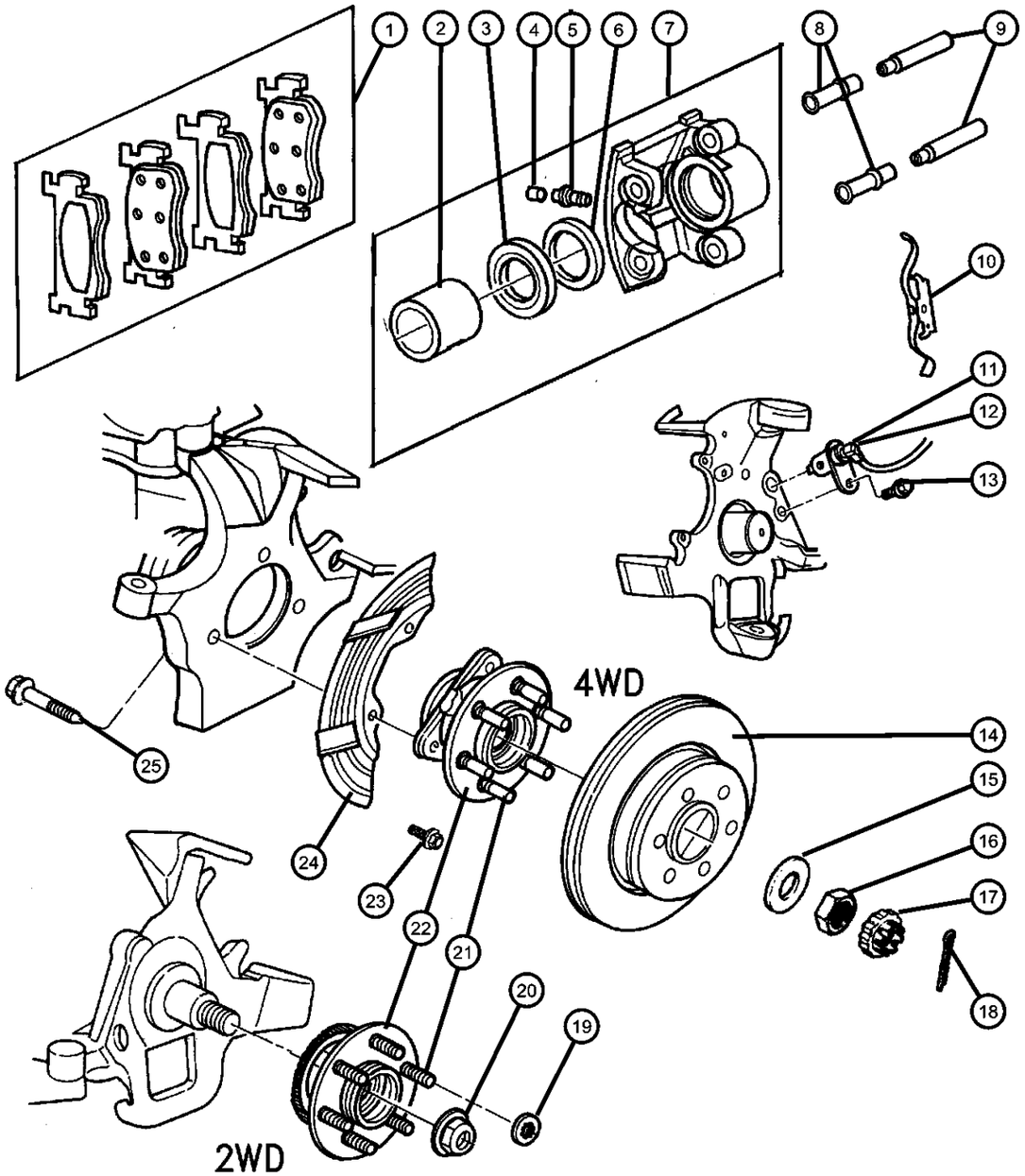

ITEM	PART NUMBER	QTY	LINE	SERIES	BODY	ENGINE	TRANS	TRIM	DESCRIPTION
13	00180077	1	1						BOLT, Hex Head, 5/16x18x3/4, Anti-Lock Brake Sensor Mounting
14	52009208	2							ROTOR, BrakeRight or Left
15	06502293	2	5						WASHER, Flat, M23x43x4
16	06502294	2	5						NUT, Hex Flange, M22x1.25
17	04293167	2	5						NUT AND WASHER PACKAGE, Front Hub, Consists of Wave Washer and Lock Nut
18	06500336	2	5						PIN, Cotter, M5x36.00
19	06031635	4							NUT, Push, .50-13
20	06504007	2	1						NUT, Axle Hub
21									STUD, Hub
	04897915AA	6	1						
		6	5						
22									HUB AND BEARING, Brake
	52009406	2	1						BGK-with Wheel Studs, Right or Left
	52009528	2	1						BGJ-with Wheel Studs, Right or Left
	52068964AD	1	5						BGK-with Wheel Studs and Sensor, Right
	52068965AD	1	5						BGK-with Wheel Studs and Sensor, Left
	52069361AB	2	5						BGJ-with Wheel Studs, Right or Left
23									SCREW, Hex Flange Head, M8x1.25x23
	06502905	6	1						Splash Shield to Knuckle, Mounting
		4	5						Splash Shield to Knuckle, Mounting
24									SHIELD, Splash
	52008456	1	1						Right
	52008457	1	1						Left
	52008990	1	5						Right
	52008991	1	5						Left
25	06505828AA	6	5						BOLT, Hub, Knuckle to Hub Mounting

DAKOTA (AN)

SERIES	LINE	BODY	ENGINE	TRANSMISSION
L = Quad Cab L = Regular Cab L = Club Cab	1 = Dakota 2WD 5 = Dakota 4WD	31 = CLUB CAB 2-DR 6.5 FT BOX 61 = REG CAB 6.5 FT BOX 84 = CREW CAB 4-DR W.B.1	EPO = 2.5L 4 Cyl. EHO = 3.9L 6 Cyl. EMO = 5.9L 8 Cyl. EVO = 4.7L Magnum EHC = 3.9L SMPI V6 EML = 5.9L V8 MPI Engine EPE = 2.5L POWER TECH I-4 Cyl. EVA = 4.7L V8 MPI	DDC = TRANSMISSION - 5-SPEED HD MANUAL DG4 = TRANSMISSION-MULTI-SPEED AUTO, 45RFE DGK = TRANSMISSION - 4-SPD. AUTOMATIC,42RE DGT = TRANSMISSION - 4-SPD. AUTOMATIC,46RE DGO = AUTO. TRANS.

Brakes,Rear,9 Inches x 2.5 Inches
Figure 5-210

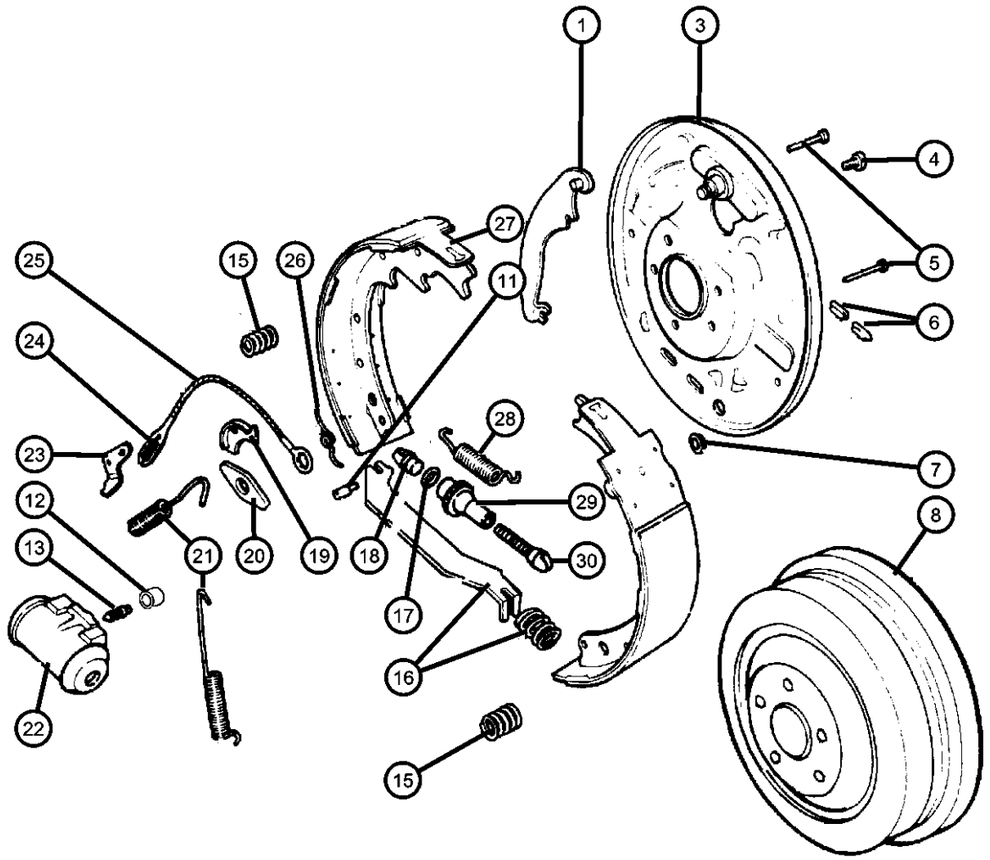

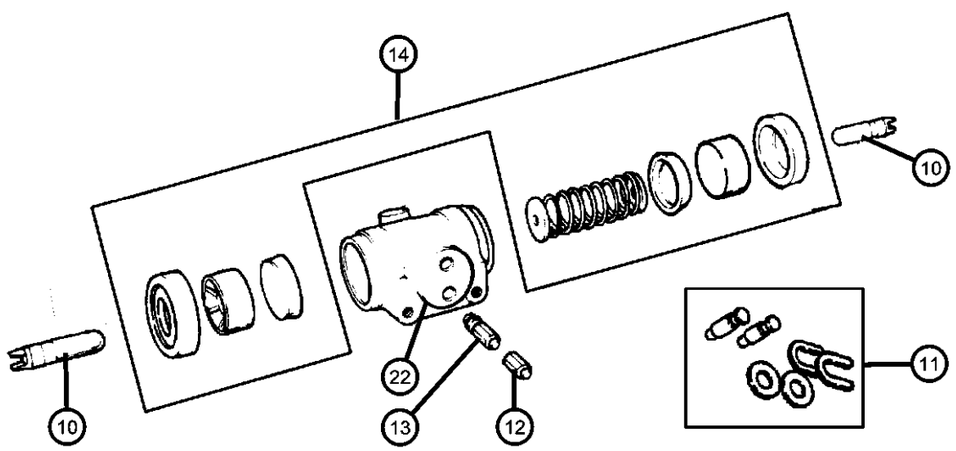

ITEM	PART NUMBER	QTY	LINE	SERIES	BODY	ENGINE	TRANS	TRIM	DESCRIPTION
1									LEVER, Park Brake
	04882774	1	5		31, 61, 84				Right
		1	1						Right
	04882775	1	1						Left
		1	5		31, 61, 84				Left
-2									SPRING, Parking Brake
	04882776	1	1						Anti-Rattle Spring, Lever
		1	5		31, 61, 84				Anti-Rattle Spring, Lever
3									PLATE, Brake Backing
	05252720	1	1						Right
		1	5		31, 61, 84				Right
	05252721	1	1						Left
		1	5		31, 61, 84				Left
4									BOLT, Hex Head
	06028921	2	1						Wheel Cylinder, Mounting
		2	5		31, 61, 84				Wheel Cylinder, Mounting
5									PIN, Brake Shoe Hold Down
	02260548	2	1						
		2	5		31, 61, 84				
6									PLUG, Brake Adjusting Hole
	04238721	2	1						
		2	5		31, 61, 84				
7									NUT, Hex Flange Lock
	00152345	8	1						Backing Plate to Axle, Mounting
		8	5		31, 61, 84				Backing Plate to Axle, Mounting
8									DRUM, Brake
	52006290	2	5		31, 61, 84				
		2	1						
-9	06031635	4							NUT, Push, .50-13, Brake Drum Retainer
10									ROD, Brake Cylinder Piston
	02260787	2	5		31, 61, 84				
		2	1						

DAKOTA (AN)

SERIES	LINE	BODY	ENGINE	TRANSMISSION
L = Quad Cab L = Regular Cab L = Club Cab	1 = Dakota 2WD 5 = Dakota 4WD	31 = CLUB CAB 2-DR 6.5 FT BOX 61 = REG CAB 6.5 FT BOX 84 = CREW CAB 4-DR W.B.1	EPO = 2.5L 4 Cyl. EHO = 3.9L 6 Cyl. EMO = 5.9L 8 Cyl. EVO = 4.7L Magnum EHC = 3.9L SMPI V6 EML = 5.9L V8 MPI Engine EPE = 2.5L POWER TECH I-4 Cyl. EVA = 4.7L V8 MPI	DDC = TRANSMISSION - 5-SPEED HD MANUAL DG4 = TRANSMISSION-MULTI-SPEED AUTO, 45RFE DGK = TRANSMISSION - 4-SPD. AUTOMATIC,42RE DGT = TRANSMISSION - 4-SPD. AUTOMATIC,46RE DGO = AUTO. TRANS.

AR = use ase required - = Non illustrrated part

Brakes,Rear,9 Inches x 2.5 Inches
Figure 5-210

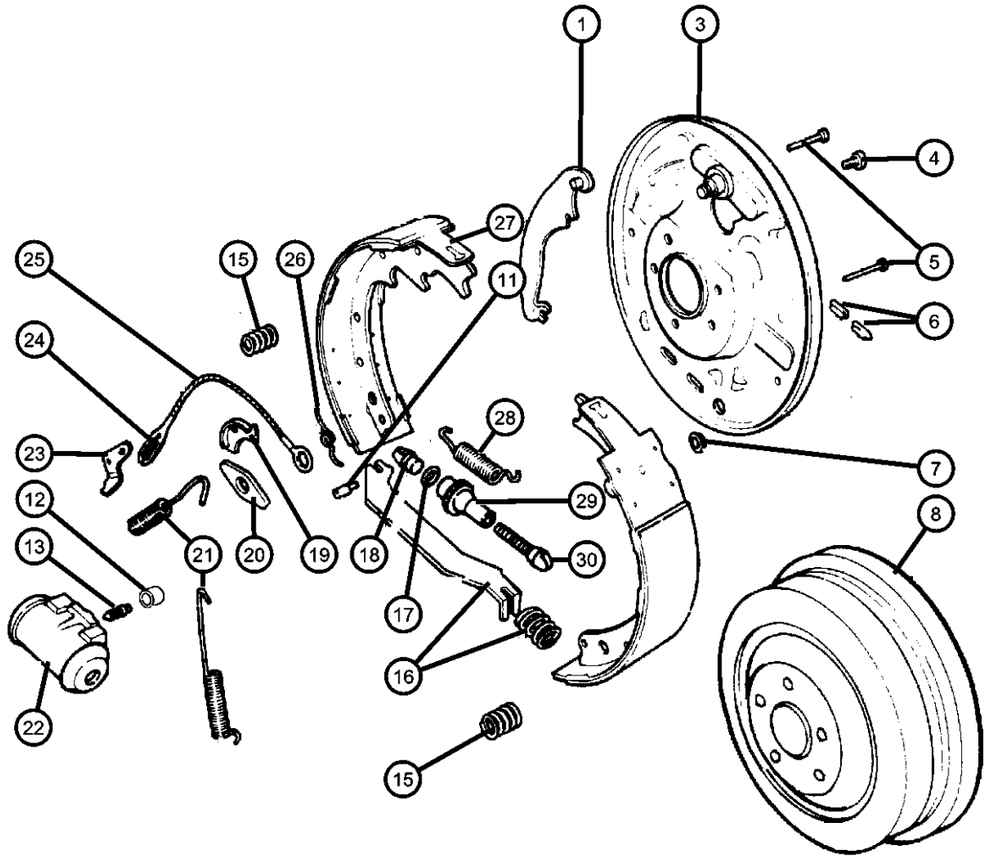

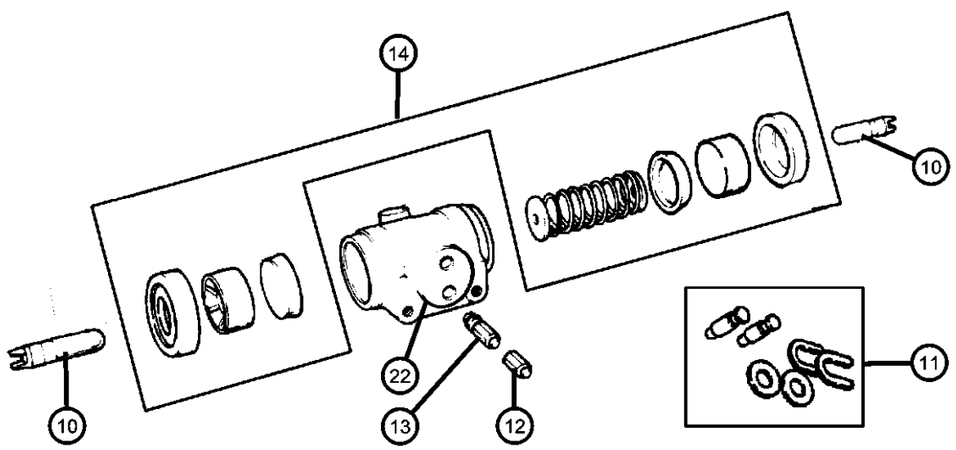

ITEM	PART NUMBER	QTY	LINE	SERIES	BODY	ENGINE	TRANS	TRIM	DESCRIPTION
11									HARDWARE PACKAGE, Rear Brake
	04049681	1	1						
		1	5		31, 61, 84				
12									CAP, Bleeder
	04238717	1	1						
		1	5						
13									SCREW, Bleeder
	03766674	1	1						
		1	5						
14									REPAIR KIT, Wheel Cylinder
	05252631	1	1						
		1	5						
15									SPRING, Brake Shoe Hold Down
	04313062	1	1						
		1	5		31, 61, 84				
16									STRUT, Parking Brake
	04713590	1	5		31, 61, 84				
		1	1						
17									WASHER, Adjuster Button
	06027559	1	5		31, 61, 84				
		1	1						
18									BUTTON, Rear Brake Auto Adjust
	02944586	1	5		31, 61, 84				
		1	1						
19									GUIDE, Brake Adjusting Cable
	02260793	1	5		31, 61, 84				
		1	1						
20									PLATE, Brake Shoe Guide
	04313075	1	5		31, 61, 84				
		1	1						
21									SPRING, Brake Shoe Return

DAKOTA (AN)

SERIES	LINE	BODY	ENGINE	TRANSMISSION
L = Quad Cab L = Regular Cab L = Club Cab	1 = Dakota 2WD 5 = Dakota 4WD	31 = CLUB CAB 2-DR 6.5 FT BOX 61 = REG CAB 6.5 FT BOX 84 = CREW CAB 4-DR W.B.1	EPO = 2.5L 4 Cyl. EHO = 3.9L 6 Cyl. EMO = 5.9L 8 Cyl. EVO = 4.7L Magnum EHC = 3.9L SMPI V6 EML = 5.9L V8 MPI Engine EPE = 2.5L POWER TECH I-4 Cyl. EVA = 4.7L V8 MPI	DDC = TRANSMISSION - 5-SPEED HD MANUAL DG4 = TRANSMISSION-MULTI-SPEED AUTO, 45RFE DGK = TRANSMISSION - 4-SPD. AUTOMATIC,42RE DGT = TRANSMISSION - 4-SPD. AUTOMATIC,46RE DGO = AUTO. TRANS.

Brakes,Rear,9 Inches x 2.5 Inches
Figure 5-210

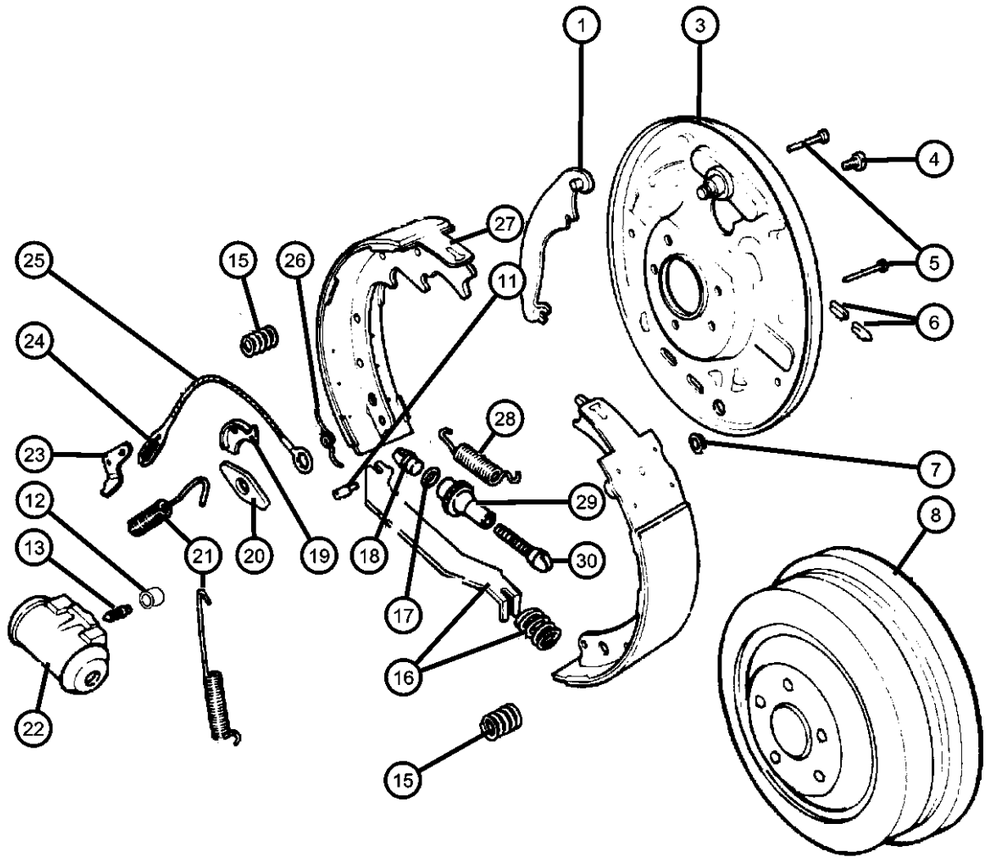

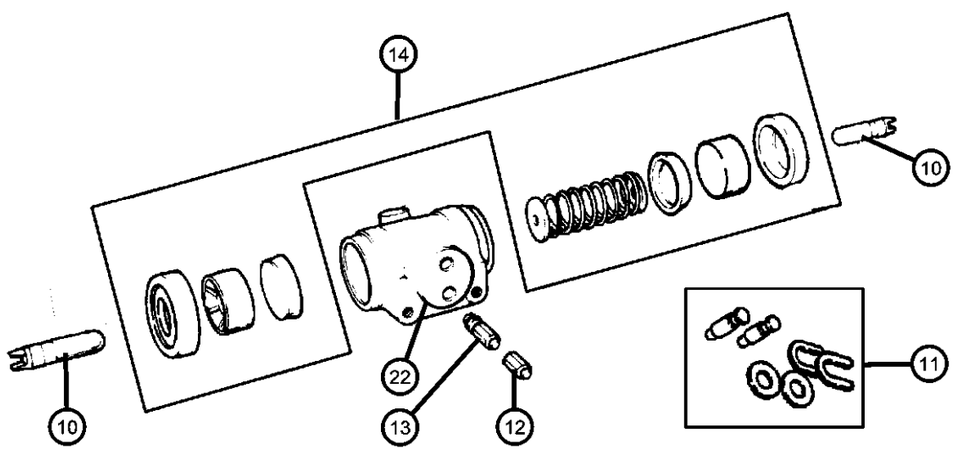

ITEM	PART NUMBER	QTY	LINE	SERIES	BODY	ENGINE	TRANS	TRIM	DESCRIPTION
	02881676	1	1						
		1	5		31, 61, 84				
22									CYLINDER, Wheel
	04313056	1	1						Complete Assembly
	V2103056AA								Mopar V-Line Alternative Part Wheel Cylinder
		1	5		31, 61, 84				Complete Assembly
	V2103056AA								Mopar V-Line Alternative Part Wheel Cylinder
23									LEVER, Park Brake Adjusting
	04761759	1	1						
		1	5		31, 61, 84				
24									SPRING, Adjuster Cable
	03461660	1	1						
		1	5		31, 61, 84				
25									CABLE, Brake Automatic Adjuster
	03461662	1	1						
		1	5		31, 61, 84				
26									SPRING, Brake Auto Adjuster Lever
	02944580	1	1						Right
		1	5		31, 61, 84				Right
	02944581	1	5		31, 61, 84				Left
		1	1						Left
27									SHOE AND LINING KIT, Drum
	04723367AB	1	1						Comes with Item 11
	BHKH7265								Mopar V-Line Alternative Part All In One Drum Combi Kits
	BHKH2526								Mopar V-Line Alternative Part Drum Self Adjuster Kit Left
	BHKH2527								Mopar V-Line Alternative Part Drum Self Adjuster Kit
	V2010367AB								Mopar V-Line Alternative Part
		1	5		31, 61, 84				Comes with Item 11

DAKOTA (AN)

SERIES	LINE	BODY	ENGINE	TRANSMISSION
L = Quad Cab L = Regular Cab L = Club Cab	1 = Dakota 2WD 5 = Dakota 4WD	31 = CLUB CAB 2-DR 6.5 FT BOX 61 = REG CAB 6.5 FT BOX 84 = CREW CAB 4-DR W.B.1	EPO = 2.5L 4 Cyl. EHO = 3.9L 6 Cyl. EMO = 5.9L 8 Cyl. EVO = 4.7L Magnum EHC = 3.9L SMPI V6 EML = 5.9L V8 MPI Engine EPE = 2.5L POWER TECH I-4 Cyl. EVA = 4.7L V8 MPI	DDC = TRANSMISSION - 5-SPEED HD MANUAL DG4 = TRANSMISSION-MULTI-SPEED AUTO, 45RFE DGK = TRANSMISSION - 4-SPD. AUTOMATIC,42RE DGT = TRANSMISSION - 4-SPD. AUTOMATIC,46RE DGO = AUTO. TRANS.

AR = use ase required - = Non illustrrated part

Brakes,Rear,9 Inches x 2.5 Inches
Figure 5-210

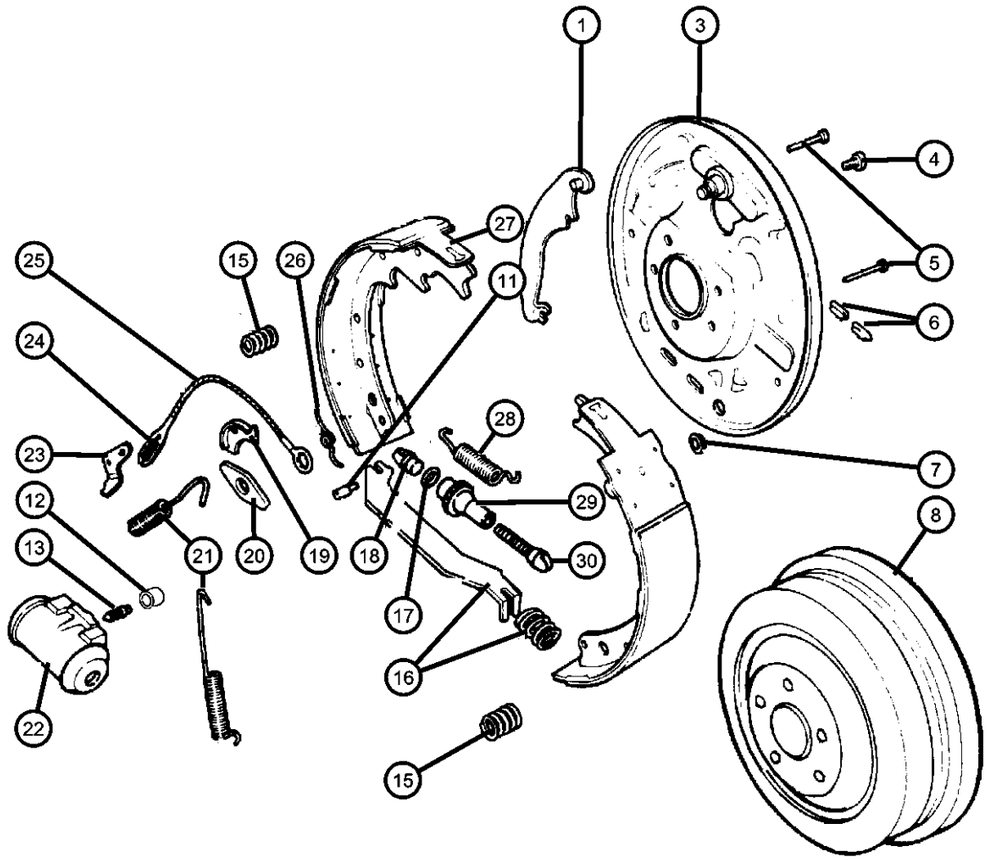

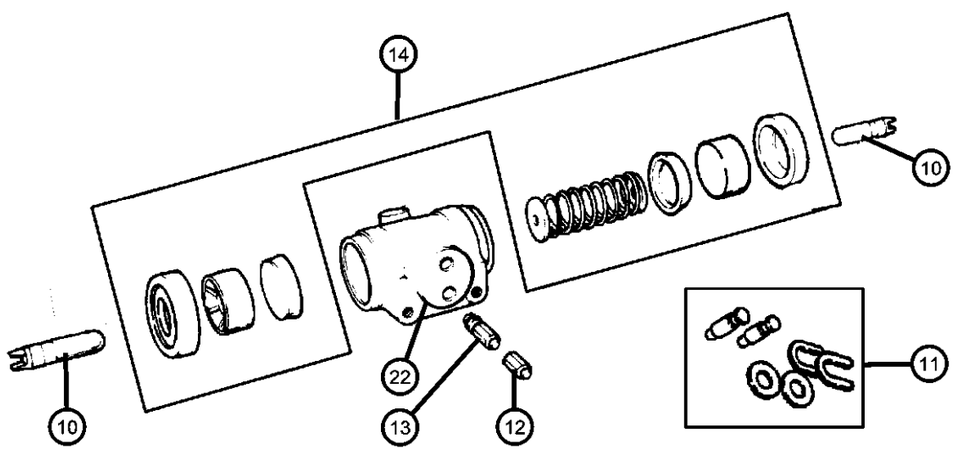

ITEM	PART NUMBER	QTY	LINE	SERIES	BODY	ENGINE	TRANS	TRIM	DESCRIPTION
	BHKH7265								Mopar V-Line Alternative Part All In One Drum Combi Kits
	BHKH2526								Mopar V-Line Alternative Part Drum Self Adjuster Kit Left
	BHKH2527								Mopar V-Line Alternative Part Drum Self Adjuster Kit
	V2010367AB								Mopar V-Line Alternative Part
28									SPRING, Brake Shoe to Shoe
	04423085	1	5		31, 61, 84				
		1	1						
29									NUT, Rear Brake Auto Adjust Pivot
	02944692	1	1						Right
		1	5		31, 61, 84				Right
	02944693	1	1						Left
		1	5		31, 61, 84				Left
30									SCREW, Brake Adjusting
	04423898	1	5		31, 61, 84				Right
		1	1						Right
	04423899	1	5		31, 61, 84				Left
		1	1						Left

DAKOTA (AN)

SERIES	LINE	BODY	ENGINE	TRANSMISSION
L = Quad Cab	1 = Dakota 2WD	31 = CLUB CAB 2-DR 6.5 FT BOX	EPO = 2.5L 4 Cyl.	DDC = TRANSMISSION - 5-SPEED HD MANUAL
L = Regular Cab	5 = Dakota 4WD	61 = REG CAB 6.5 FT BOX	EHO = 3.9L 6 Cyl.	DG4 = TRANSMISSION-MULTI-SPEED AUTO, 45RFE
L = Club Cab		84 = CREW CAB 4-DR W.B.1	EMO = 5.9L 8 Cyl.	DGK = TRANSMISSION - 4-SPD. AUTOMATIC,42RE
			EVO = 4.7L Magnum	DGT = TRANSMISSION - 4-SPD. AUTOMATIC,46RE
			EHC = 3.9L SMPI V6	DGO = AUTO. TRANS.
			EML = 5.9L V8 MPI Engine	
			EPE = 2.5L POWER TECH I-4 Cyl.	
			EVA = 4.7L V8 MPI	

Brakes,Rear,11 Inches x 2.25 Inches
Figure 5-220

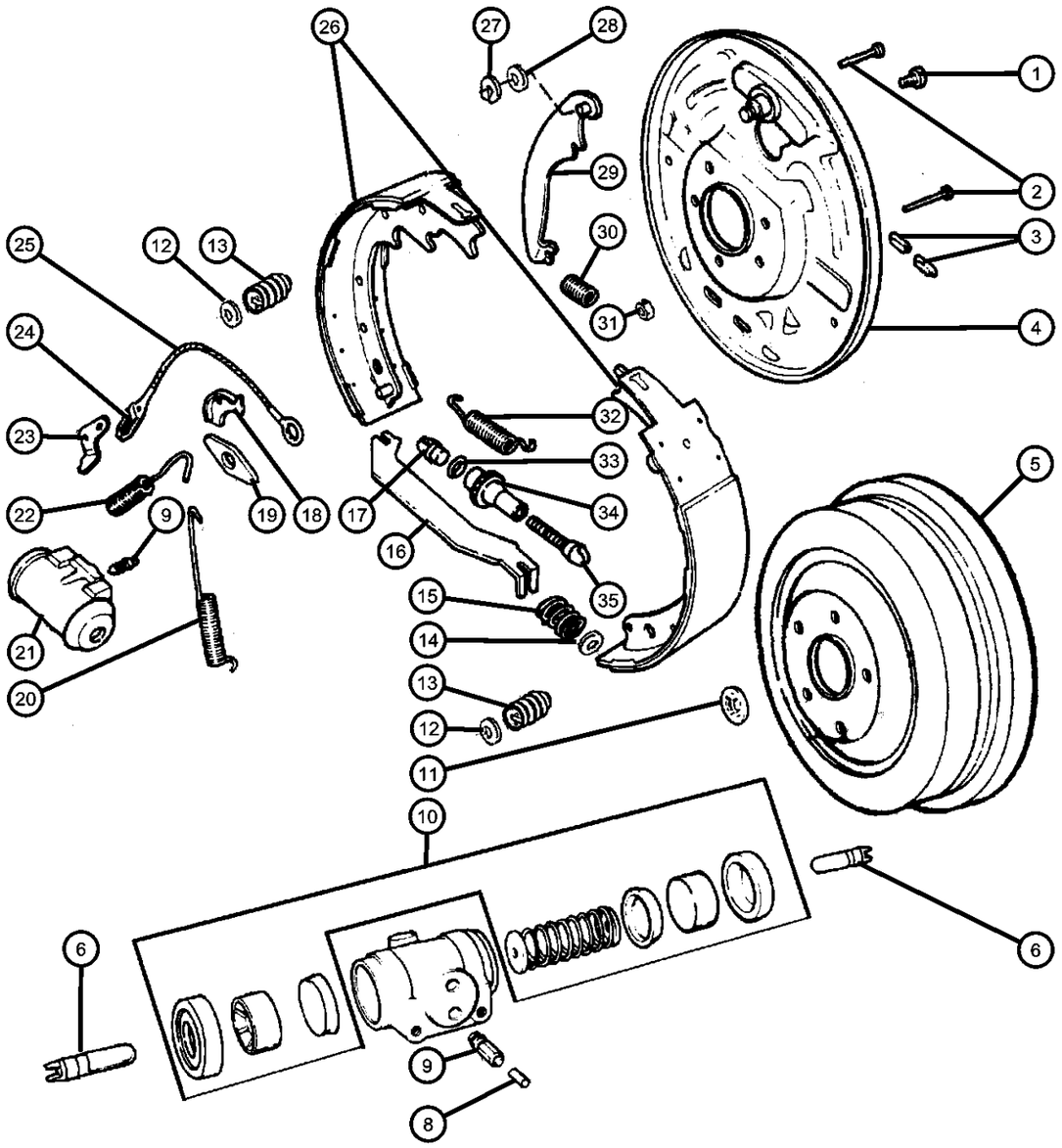

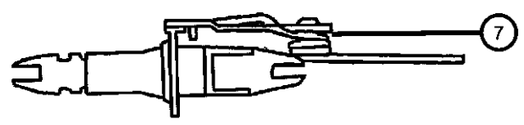

ITEM	PART NUMBER	QTY	LINE	SERIES	BODY	ENGINE	TRANS	TRIM	DESCRIPTION
1									BOLT, Hex Head
	06028921	2	1						Wheel Cylinder, Mounting
		2	5						Wheel Cylinder, Mounting
2									PIN, Brake Shoe Hold Down
	05014223AA	2	5		31, 61, 84				
		2	1						
3									PLUG, Brake Adjusting Hole
	32000147	2	5		31, 61, 84				
		2	1						
4									PLATE, Brake Backing
	05014128AA	1	5		31, 61, 84				Right
		1	1						Right
	05014129AA	1	5		31, 61, 84				Left
		1	1						Left
5									DRUM, Brake
	52009595AC	2	5						
		2	1						
6									ROD, Brake Cylinder Piston
	03492657	2	5		31, 61, 84				
		2	1						
7									SPRING, Auto Adjusting
	04746582	1	5		31, 61, 84				Lever, Right
		1	1						Lever, Right
	04746583	1	5		31, 61, 84				Lever, Left
		1	1						Lever, Left
8	04126733	1							CAP, Bleeder
9									SCREW, Bleeder
	J3203313	1	5		31, 61, 84				
		1	1						
10									REPAIR KIT, Wheel Cylinder
	05252631	1	5						
		1	1						

DAKOTA (AN)

SERIES	LINE	BODY	ENGINE	TRANSMISSION
L = Quad Cab L = Regular Cab L = Club Cab	1 = Dakota 2WD 5 = Dakota 4WD	31 = CLUB CAB 2-DR 6.5 FT BOX 61 = REG CAB 6.5 FT BOX 84 = CREW CAB 4-DR W.B.1	EPO = 2.5L 4 Cyl. EHO = 3.9L 6 Cyl. EMO = 5.9L 8 Cyl. EVO = 4.7L Magnum EHC = 3.9L SMPI V6 EML = 5.9L V8 MPI Engine EPE = 2.5L POWER TECH I-4 Cyl. EVA = 4.7L V8 MPI	DDC = TRANSMISSION - 5-SPEED HD MANUAL DG4 = TRANSMISSION-MULTI-SPEED AUTO, 45RFE DGK = TRANSMISSION - 4-SPD. AUTOMATIC,42RE DGT = TRANSMISSION - 4-SPD. AUTOMATIC,46RE DGO = AUTO. TRANS.

AR = use ase required - = Non illustrrated part

<< RETURN TO GROUP INDEX

Brakes,Rear,11 Inches x 2.25 Inches
Figure 5-220

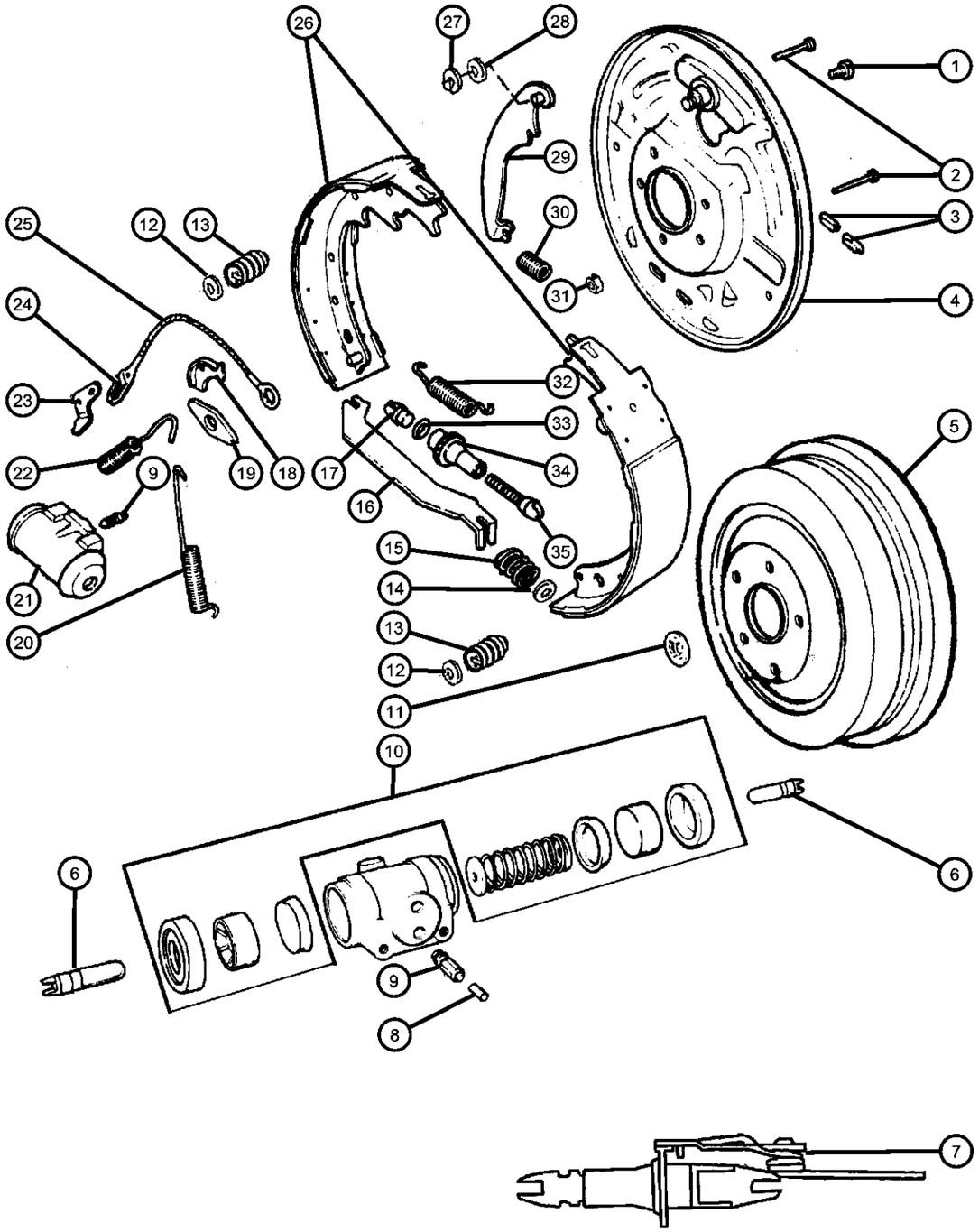

ITEM	PART NUMBER	QTY	LINE	SERIES	BODY	ENGINE	TRANS	TRIM	DESCRIPTION
11									NUT, Push, .50-13
	06031635	4	5		31, 61, 84				Brake Drum Retainer
		4	1						Brake Drum Retainer
12									CUP, Brake Hold Down Spring
	05014227AA	2	5		31, 61, 84				
		2	1						
13									SPRING, Brake Shoe Hold Down
	05014224AA	2	5		31, 61, 84				
		2	1						
14									CLIP, Park Brake Strut
	04773762	1	5		31, 61, 84				
		1	1						
15									SPRING, Parking Brake Strut
	04773942	1	5		31, 61, 84				
		1	1						
16									STRUT, Parking Brake
	05003791AA	1	5		31, 61, 84				
		1	1						
17									SOCKET, Brake Adjusting
	04746586	1	5		31, 61, 84				
		1	1						
18									GUIDE, Brake Adjusting Cable
	J3201947	1	5		31, 61, 84				
		1	1						
19									PLATE, Brake Shoe Guide
	05003786AA	1	5		31, 61, 84				
		1	1						
20									SPRING, Brake Shoe Return
	05003781AA	1	5		31, 61, 84				Primary
		1	1						Primary
21									CYLINDER, Wheel

DAKOTA (AN)

SERIES	LINE	BODY	ENGINE	TRANSMISSION
L = Quad Cab	1 = Dakota 2WD	31 = CLUB CAB 2-DR 6.5 FT BOX	EPO = 2.5L 4 Cyl.	DDC = TRANSMISSION - 5-SPEED HD MANUAL
L = Regular Cab	5 = Dakota 4WD	61 = REG CAB 6.5 FT BOX	EHO = 3.9L 6 Cyl.	DG4 = TRANSMISSION-MULTI-SPEED AUTO, 45RFE
L = Club Cab		84 = CREW CAB 4-DR W.B.1	EMO = 5.9L 8 Cyl.	DGK = TRANSMISSION - 4-SPD. AUTOMATIC,42RE
			EVO = 4.7L Magnum	DGT = TRANSMISSION - 4-SPD. AUTOMATIC,46RE
			EHC = 3.9L SMPI V6	DGO = AUTO. TRANS.
			EML = 5.9L V8 MPI Engine	
			EPE = 2.5L POWER TECH I-4 Cyl.	
			EVA = 4.7L V8 MPI	

AR = use ase required - = Non illustrrated part

Brakes,Rear,11 Inches x 2.25 Inches
Figure 5-220

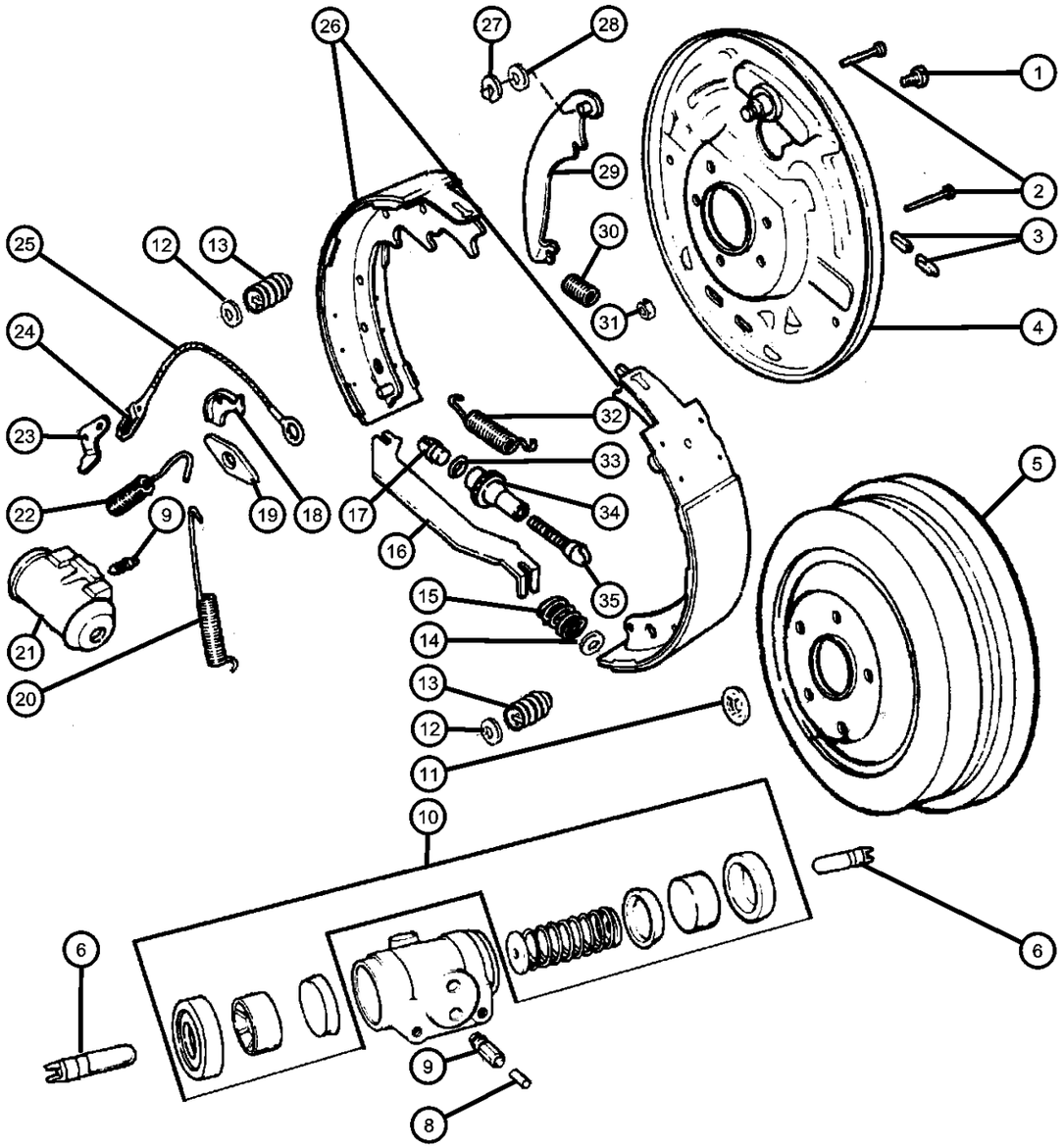

ITEM	PART NUMBER	QTY	LINE	SERIES	BODY	ENGINE	TRANS	TRIM	DESCRIPTION
	04088898	1	5		31, 61, 84				Complete Assembly, Right
	V2108898AA								Mopar V-Line Alternative Part Wheel Cylinder
		1	1						Complete Assembly, Right
	V2108898AA								Mopar V-Line Alternative Part Wheel Cylinder
	04088899	1	5		31, 61, 84				Complete Assembly, Left
	V2108899AA								Mopar V-Line Alternative Part Wheel Cylinder
		1	1						Complete Assembly, Left
	V2108899AA								Mopar V-Line Alternative Part Wheel Cylinder
22									SPRING, Brake Shoe Return
	02953992	1	5		31, 61, 84				Secondary
		1	1						Secondary
23									LEVER, Rear Wheel Brake Adjust
	05003788AA	1	5		31, 61, 84				Right
		1	1						Right
	05003789AA	1	5		31, 61, 84				Left
		1	1						Left
24									SPRING, Adjuster Cable
	03461660	1	5		31, 61, 84				
		1	1						
25									CABLE, Brake Automatic Adjuster
	03461664	1	5		31, 61, 84				
		1	1						
26									SHOE AND LINING KIT, Drum
	05014126AA	1	5		31, 61, 84				
	BHKH7298								Mopar V-Line Alternative Part All In One Drum Combi Kits
	BHKH2666								Mopar V-Line Alternative Part Drum Self Adjuster Kit Left
	BHKH2667								Mopar V-Line Alternative Part Drum Self Adjuster Kit
	V2013126AB								Mopar V-Line Alternative Part

DAKOTA (AN)

SERIES	LINE	BODY	ENGINE	TRANSMISSION
L = Quad Cab	1 = Dakota 2WD	31 = CLUB CAB 2-DR 6.5 FT BOX	EPO = 2.5L 4 Cyl.	DDC = TRANSMISSION - 5-SPEED HD MANUAL
L = Regular Cab	5 = Dakota 4WD	61 = REG CAB 6.5 FT BOX	EHO = 3.9L 6 Cyl.	DG4 = TRANSMISSION-MULTI-SPEED AUTO, 45RFE
L = Club Cab		84 = CREW CAB 4-DR W.B.1	EMO = 5.9L 8 Cyl.	DGK = TRANSMISSION - 4-SPD. AUTOMATIC,42RE
			EVO = 4.7L Magnum	DGT = TRANSMISSION - 4-SPD. AUTOMATIC,46RE
			EHC = 3.9L SMPI V6	DGO = AUTO. TRANS.
			EML = 5.9L V8 MPI Engine	
			EPE = 2.5L POWER TECH I-4 Cyl.	
			EVA = 4.7L V8 MPI	

AR = use ase required - = Non illustrrated part

Brakes,Rear,11 Inches x 2.25 Inches
Figure 5-220

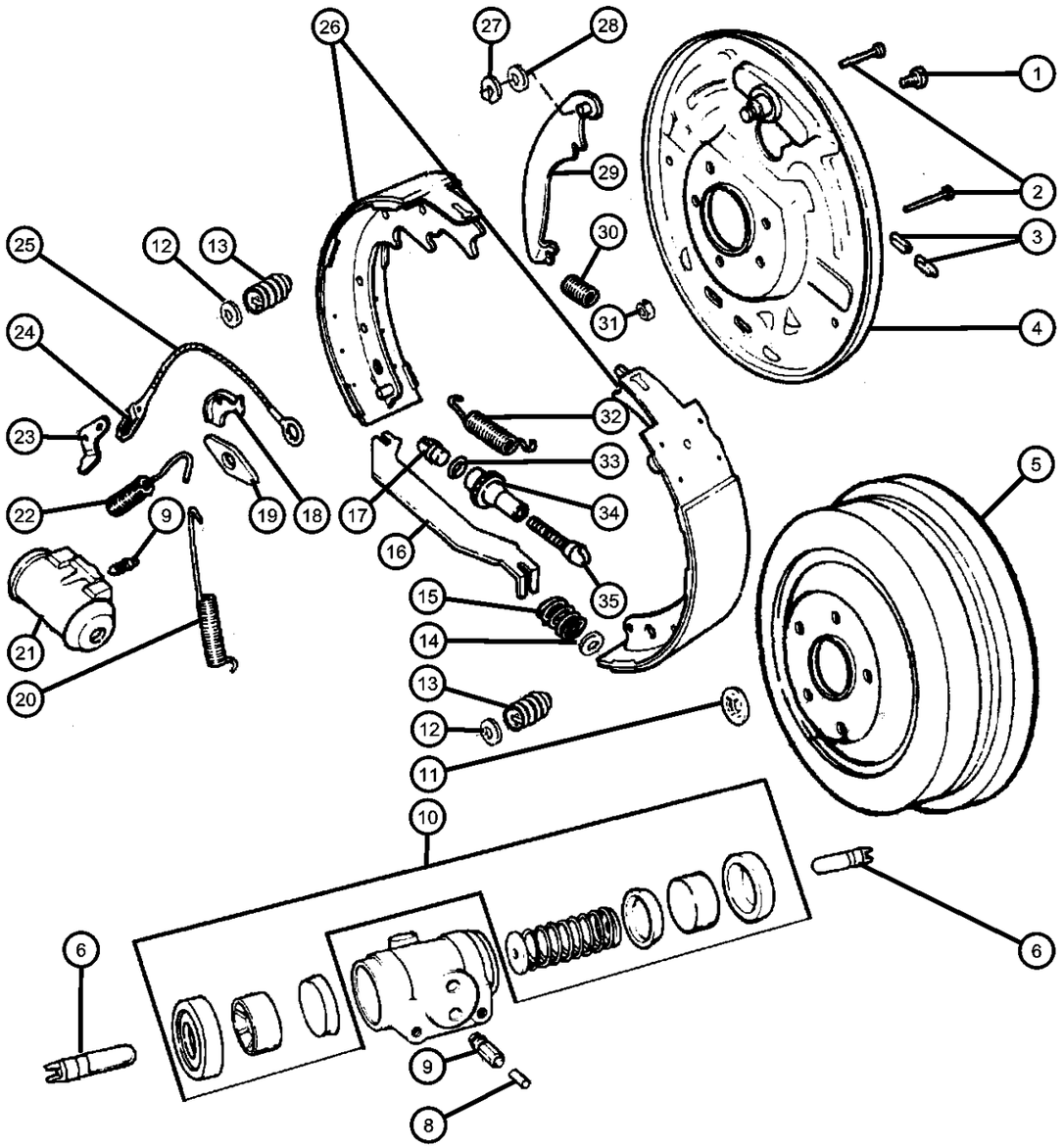

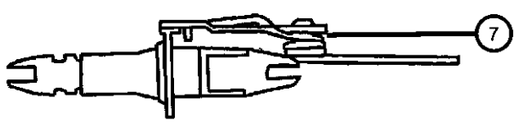

ITEM	PART NUMBER	QTY	LINE	SERIES	BODY	ENGINE	TRANS	TRIM	DESCRIPTION
		1	1						
	BHKH7298								Mopar V-Line Alternative Part All In One Drum Combi Kits
	BHKH2666								Mopar V-Line Alternative Part Drum Self Adjuster Kit Left
	BHKH2667								Mopar V-Line Alternative Part Drum Self Adjuster Kit
	V2013126AB								Mopar V-Line Alternative Part
27									RETAINER, Parking Brake Lever
	J3108202	1	5		31, 61, 84				
		1	1						
28									WASHER, Parking Brake Lever
	83502900	1	5		31, 61, 84				Mounting
		1	1						Mounting
29									LEVER, Park Brake Adjusting
	05003784AA	1	5		31, 61, 84				Right
		1	1						Right
	05003785AA	1	5		31, 61, 84				Left
		1	1						Left
30									SPRING, Brake Auto Adjuster Lever
	05003790AA	1	5		31, 61, 84				
		1	1						
31									NUT, Hex Flange Lock
	00152345	8	5		31, 61, 84				Backing Plate to Axle, Mounting
		8	1						Backing Plate to Axle, Mounting
32									SPRING, Brake Shoe to Shoe
	05003787AA	1	5		31, 61, 84				
		1	1						
33									WASHER, Rear Brake Adjuster
	04746585	1	5		31, 61, 84				
		1	1						
34									NUT, Rear Brake Auto Adjust Pivot
	02944692	1	1						Right

DAKOTA (AN)

SERIES	LINE	BODY	ENGINE	TRANSMISSION
L = Quad Cab L = Regular Cab L = Club Cab	1 = Dakota 2WD 5 = Dakota 4WD	31 = CLUB CAB 2-DR 6.5 FT BOX 61 = REG CAB 6.5 FT BOX 84 = CREW CAB 4-DR W.B.1	EPO = 2.5L 4 Cyl. EHO = 3.9L 6 Cyl. EMO = 5.9L 8 Cyl. EVO = 4.7L Magnum EHC = 3.9L SMPI V6 EML = 5.9L V8 MPI Engine EPE = 2.5L POWER TECH I-4 Cyl. EVA = 4.7L V8 MPI	DDC = TRANSMISSION - 5-SPEED HD MANUAL DG4 = TRANSMISSION-MULTI-SPEED AUTO, 45RFE DGK = TRANSMISSION - 4-SPD. AUTOMATIC,42RE DGT = TRANSMISSION - 4-SPD. AUTOMATIC,46RE DGO = AUTO. TRANS.

Brakes,Rear,11 Inches x 2.25 Inches
Figure 5-220

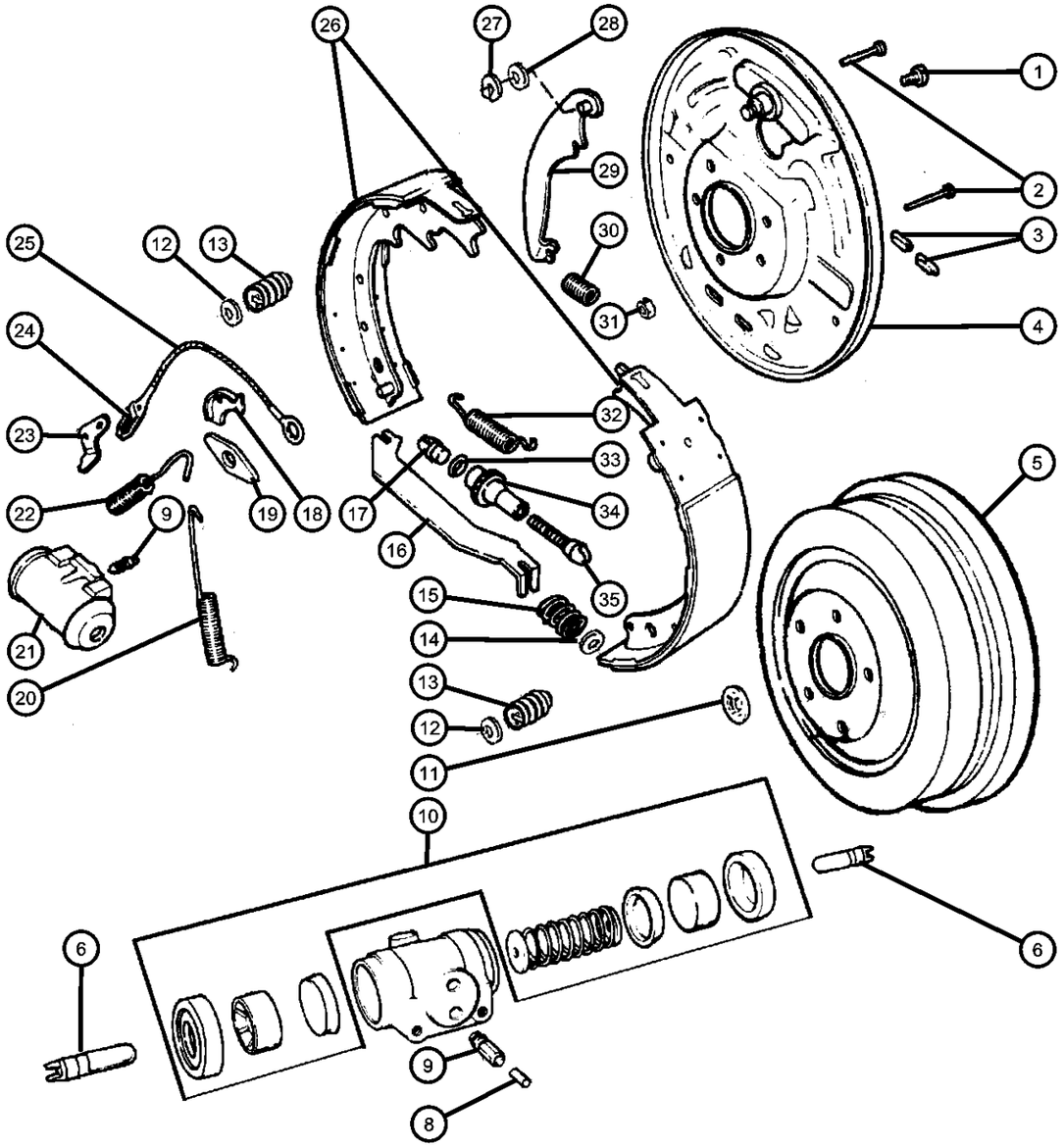

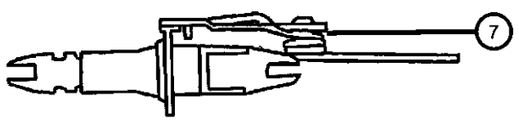

ITEM	PART NUMBER	QTY	LINE	SERIES	BODY	ENGINE	TRANS	TRIM	DESCRIPTION
		1	5		31, 61, 84				Right
	02944693	1	5		31, 61, 84				Left
		1	1						Left
35									SCREW, Brake Adjusting
	02881686	1	5		31, 61, 84				Right
		1	1						Right
	02881687	1	5		31, 61, 84				Left
		1	1						Left

DAKOTA (AN)

SERIES	LINE	BODY	ENGINE	TRANSMISSION
L = Quad Cab	1 = Dakota 2WD	31 = CLUB CAB 2-DR 6.5 FT BOX	EPO = 2.5L 4 Cyl.	DDC = TRANSMISSION - 5-SPEED HD MANUAL
L = Regular Cab	5 = Dakota 4WD	61 = REG CAB 6.5 FT BOX	EHO = 3.9L 6 Cyl.	DG4 = TRANSMISSION-MULTI-SPEED AUTO, 45RFE
L = Club Cab		84 = CREW CAB 4-DR W.B.1	EMO = 5.9L 8 Cyl.	DGK = TRANSMISSION - 4-SPD. AUTOMATIC,42RE
			EVO = 4.7L Magnum	DGT = TRANSMISSION - 4-SPD. AUTOMATIC,46RE
			EHC = 3.9L SMPI V6	DGO = AUTO. TRANS.
			EML = 5.9L V8 MPI Engine	
			EPE = 2.5L POWER TECH I-4 Cyl.	
			EVA = 4.7L V8 MPI	

Booster,Power Brake
Figure 5-310

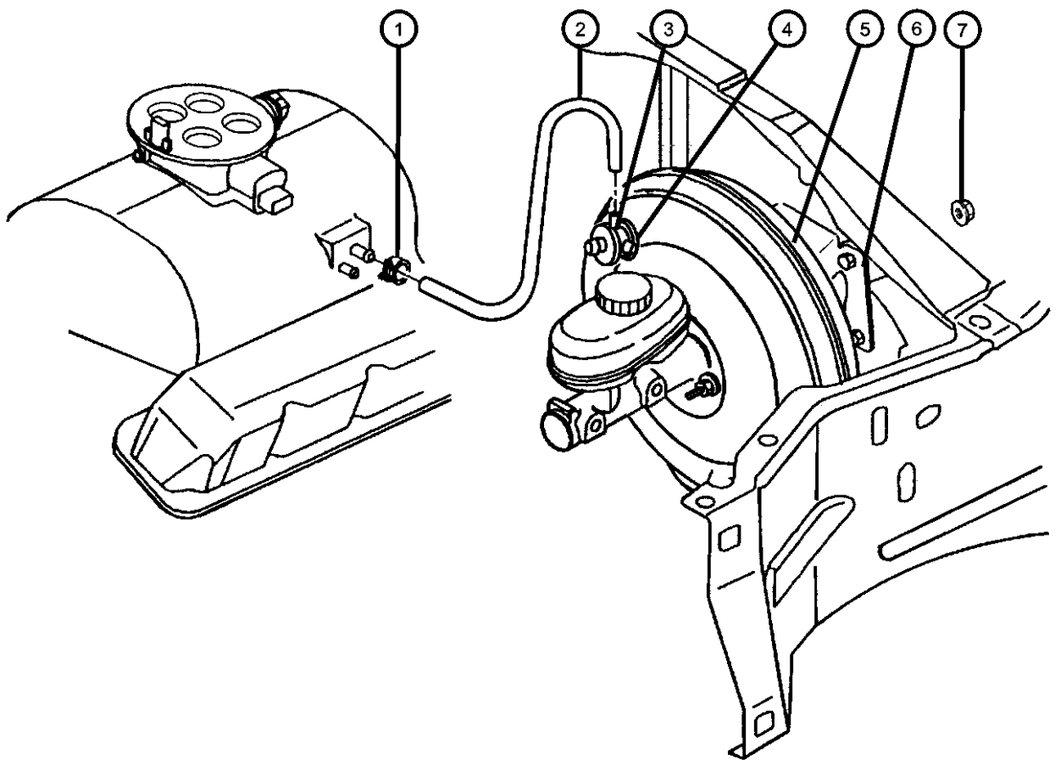

ITEM	PART NUMBER	QTY	LINE	SERIES	BODY	ENGINE	TRANS	TRIM	DESCRIPTION
Note: EP0= All 2.5L 4 Cylinder Gas Engines—EH0=All 3.9L V-6 Gas Engines—EM0=All 5.9L 8 Cylinder Gas Engines—EV0=All 4.7L Gas Engine									
1	02448761	1							CLAMP, Hose
2									HOSE, Brake Vacuum
	52009139AB	1							[EP0]
	52010382AC	1			31, 61				[EH0,EM0,EV0]
		1			84				[EH0,EM0,EV0]
3	05016730AA	1							VALVE, Brake Booster Check
4	04883813AA	1							GROMMET, Brake Booster Check Valve
5									BOOSTER, Power Brake
	05013132AB	1							[-TUT]
	05013133AB	1							[+TUT]
6	05019013AA	1							GASKET, Booster to Dash, Mounting
7	06503269	4							NUT, Hex, M10-1.5, Booster to Dash, Mounting

DAKOTA (AN)

SERIES	LINE	BODY	ENGINE	TRANSMISSION
L = Quad Cab	1 = Dakota 2WD	31 = CLUB CAB 2-DR 6.5 FT BOX	EPO = 2.5L 4 Cyl.	DDC = TRANSMISSION - 5-SPEED HD MANUAL
L = Regular Cab	5 = Dakota 4WD	61 = REG CAB 6.5 FT BOX	EHO = 3.9L 6 Cyl.	DG4 = TRANSMISSION-MULTI-SPEED AUTO, 45RFE
L = Club Cab		84 = CREW CAB 4-DR W.B.1	EMO = 5.9L 8 Cyl.	DGK = TRANSMISSION - 4-SPD. AUTOMATIC,42RE
			EVO = 4.7L Magnum	DGT = TRANSMISSION - 4-SPD. AUTOMATIC,46RE
			EHC = 3.9L SMPI V6	DGO = AUTO. TRANS.
			EML = 5.9L V8 MPI Engine	
			EPE = 2.5L POWER TECH I-4 Cyl.	
			EVA = 4.7L V8 MPI	

Master Cylinder,Brake
Figure 5-410

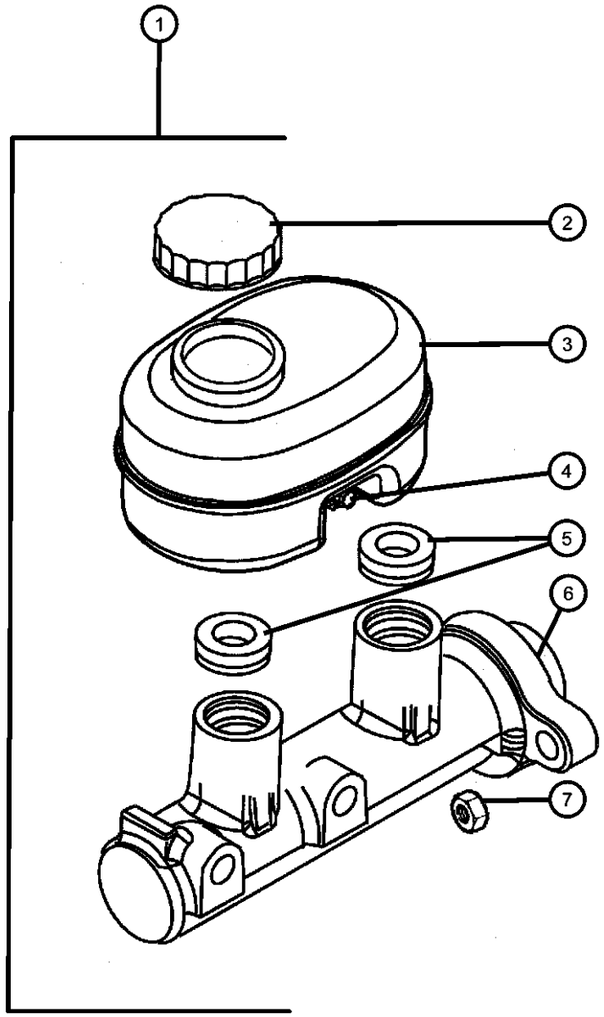

ITEM	PART NUMBER	QTY	LINE	SERIES	BODY	ENGINE	TRANS	TRIM	DESCRIPTION
1	05013131AB	1							MASTER CYLINDER, Brake
	V1103049AA								Mopar Alternative Part - Master Cylinder
2	04683656	1							CAP, Master Cylinder Reservoir
3	05017424AA	1							RESERVOIR, Brake Master Cylinder, Contains Items 2,4,5,6
4	04723394	2							PIN, Master Cylinder ReservoirMounting
5	04723389	2							GROMMET, Master Cylinder ReservoirMounting
6	04723395	1							SEAL, Master Cylinder To BoosterMounting
7	04772156	2							NUT, Master Cylinder Booster LockingMounting

DAKOTA (AN)

SERIES	LINE	BODY	ENGINE	TRANSMISSION
L = Quad Cab	1 = Dakota 2WD	31 = CLUB CAB 2-DR 6.5 FT BOX	EPO = 2.5L 4 Cyl.	DDC = TRANSMISSION - 5-SPEED HD MANUAL
L = Regular Cab	5 = Dakota 4WD	61 = REG CAB 6.5 FT BOX	EHO = 3.9L 6 Cyl.	DG4 = TRANSMISSION-MULTI-SPEED AUTO, 45RFE
L = Club Cab		84 = CREW CAB 4-DR W.B.1	EMO = 5.9L 8 Cyl.	DGK = TRANSMISSION - 4-SPD. AUTOMATIC,42RE
			EVO = 4.7L Magnum	DGT = TRANSMISSION - 4-SPD. AUTOMATIC,46RE
			EHC = 3.9L SMPI V6	DGO = AUTO. TRANS.
			EML = 5.9L V8 MPI Engine	
			EPE = 2.5L POWER TECH I-4 Cyl.	
			EVA = 4.7L V8 MPI	

Lines,Brake,From EHCU or RWAL II to Frame-AN 1,AN 5
Figure 5-510

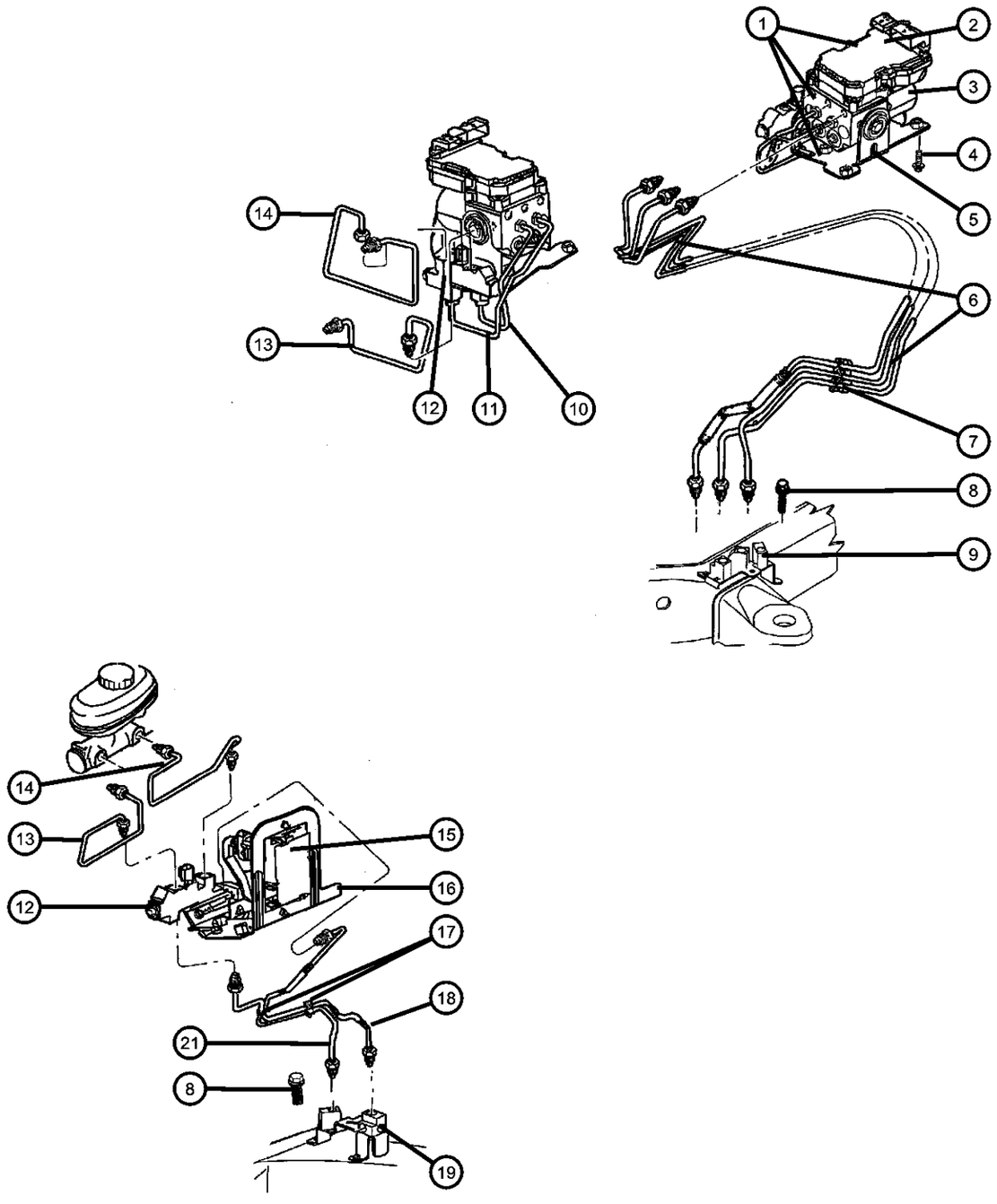

ITEM	PART NUMBER	QTY	LINE	SERIES	BODY	ENGINE	TRANS	TRIM	DESCRIPTION
Note:Sales Codes; [BGJ]=Brakes - Power Disc/Drum,Rear Anti-Lock [BGK]=Brakes -4-Wheel Anti-lock									
1									CONTROL UNIT, Anti-Lock Brake
	52009898AE	1			31, 61				[BGK]
	52010212AD	1			84				[BGK]
2									MODULE, Anti-lock Brakes
	05017702AA	1			31, 61				[BGK]
	05017706AA	1			84				[BGK]
3									HYDRAULIC CONTROL UNIT, Anti-Lock Brake System
	05096268AA	1			31, 61				[BGK]
		1			84				[BGK]
4	06100583	3							BOLT AND CONED WASHER, Hex Head, M8x25x20, [BGK] ABS Control Unit, Mounting
5									BRACKET, Anti-Lock Brake Module
	05013303AA	1			84				[BGK], Mounting
		1			31, 61				[BGK], Mounting
6	52009894AC	1							TUBE, Brake, [BGK] EHCU to Junction Block
7	52009163	4							CLIP, Brake Line, [BGK]
8	34201888	2							SCREW, Hex Head, Junction Block, Mounting
9									BLOCK, Brake Line Union
	52009887AC	1	1						[BGK] 3-Way
	52009888AC	1	5						[BGK] 3-Way
10									TUBE, Brake
	05013304AA	1			84				[BGK], Front, Jumper
		1			31, 61				[BGK], Front, Jumper
11									TUBE, Brake
	05013305AA	1			31, 61				[BGK], Rear, Jumper
		1			84				[BGK], Rear, Jumper
12									VALVE, Proportioning
	05011623AA	1			84				

DAKOTA (AN)

SERIES	LINE	BODY	ENGINE	TRANSMISSION
L = Quad Cab L = Regular Cab L = Club Cab	1 = Dakota 2WD 5 = Dakota 4WD	31 = CLUB CAB 2-DR 6.5 FT BOX 61 = REG CAB 6.5 FT BOX 84 = CREW CAB 4-DR W.B.1	EPO = 2.5L 4 Cyl. EHO = 3.9L 6 Cyl. EMO = 5.9L 8 Cyl. EVO = 4.7L Magnum EHC = 3.9L SMPI V6 EML = 5.9L V8 MPI Engine EPE = 2.5L POWER TECH I-4 Cyl. EVA = 4.7L V8 MPI	DDC = TRANSMISSION - 5-SPEED HD MANUAL DG4 = TRANSMISSION-MULTI-SPEED AUTO, 45RFE DGK = TRANSMISSION - 4-SPD. AUTOMATIC,42RE DGT = TRANSMISSION - 4-SPD. AUTOMATIC,46RE DGO = AUTO. TRANS.

Lines,Brake,From EHCU or RWAL II to Frame-AN 1,AN 5
Figure 5-510

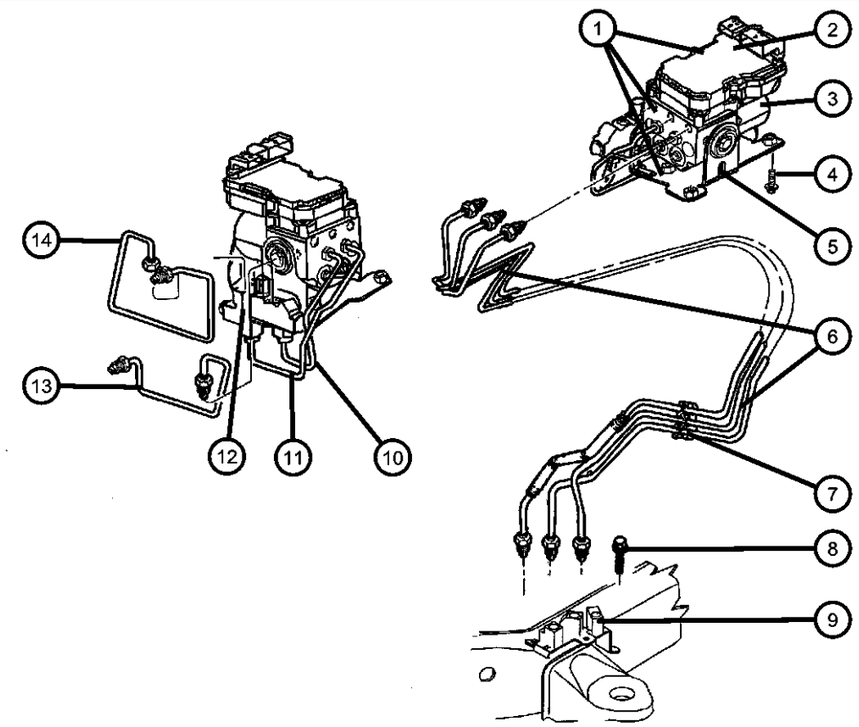

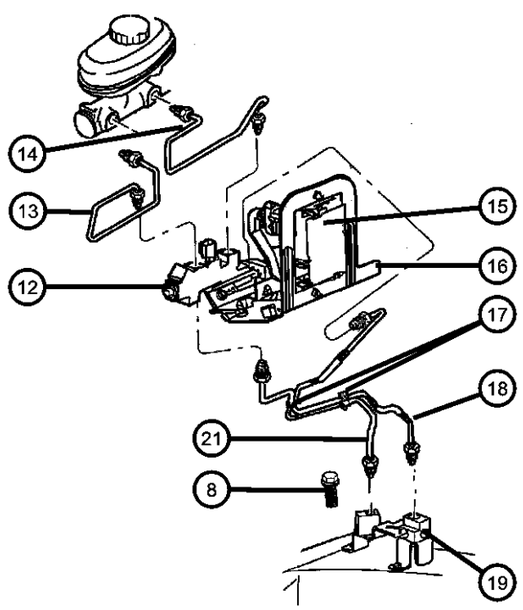

ITEM	PART NUMBER	QTY	LINE	SERIES	BODY	ENGINE	TRANS	TRIM	DESCRIPTION
		1			31, 61				
13	52009821AD	1							TUBE, Brake, Proportioning Valve to Master Cylinder, Primary
14	52009820AB	1							TUBE, Brake, Proportioning Valve to Master Cylinder, Secondary
15									MODULE, Anti-lock Brakes
	05010917AB	1			31, 61				[BGJ]
	05010921AE	1			84				[BGJ]
16									BRACKET, Anti-Lock Brake Module
	05013049AA	1			31, 61				[BGJ]
		1			84				[BGJ]
17	52008940	2							CLIP, Brake Line, [BGJ]
18	52009487AB	1							TUBE, Brake, [BGJ] RWAL to Junction Block
19									BLOCK, Brake Line Union
	52009882AD	1	5						[BGJ] 2-Way
	52009889AB	1	1						[BGJ] 2-Way
-20									VALVE, Brake Pressure Limit
	05003312AA	1			31, 61				
		1			84				
21	52009825AB	1							TUBE, Brake, [BGJ] Proportioning Valve to Junction Block
-22									TUBE, Brake
	05014838AB	1			31, 61				[BGJ] Proportioning Valve to Brake Pressure Limit Valve, Jumper
		1			84				[BGJ] Proportioning Valve to Brake Pressure Limit Valve, Jumper

DAKOTA (AN)

SERIES	LINE	BODY	ENGINE	TRANSMISSION
L = Quad Cab L = Regular Cab L = Club Cab	1 = Dakota 2WD 5 = Dakota 4WD	31 = CLUB CAB 2-DR 6.5 FT BOX 61 = REG CAB 6.5 FT BOX 84 = CREW CAB 4-DR W.B.1	EPO = 2.5L 4 Cyl. EHO = 3.9L 6 Cyl. EMO = 5.9L 8 Cyl. EVO = 4.7L Magnum EHC = 3.9L SMPI V6 EML = 5.9L V8 MPI Engine EPE = 2.5L POWER TECH I-4 Cyl. EVA = 4.7L V8 MPI	DDC = TRANSMISSION - 5-SPEED HD MANUAL DG4 = TRANSMISSION-MULTI-SPEED AUTO, 45RFE DGK = TRANSMISSION - 4-SPD. AUTOMATIC,42RE DGT = TRANSMISSION - 4-SPD. AUTOMATIC,46RE DGO = AUTO. TRANS.

Lines and Hoses,Front-AN 1
Figure 5-520

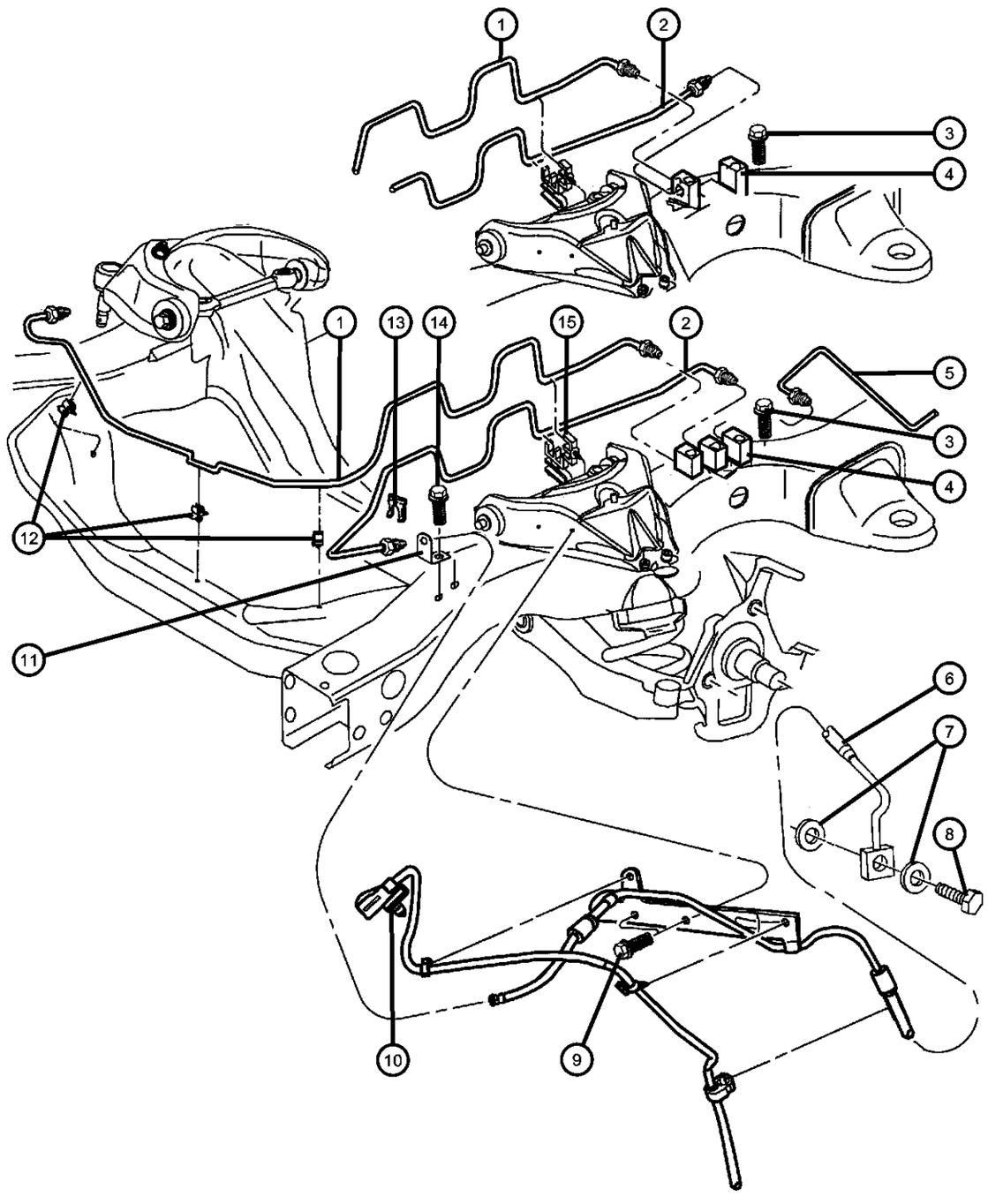

ITEM	PART NUMBER	QTY	LINE	SERIES	BODY	ENGINE	TRANS	TRIM	DESCRIPTION
Note:Sales Codes; [BGJ]=Brakes - Power Disc/Drum,Rear Anti-Lock [BGK]=Brakes -4-Wheel Anti-lock									
1									TUBE, Brake
	52010369AG	1	1						Up To and Including 10-24-99, Right
	52010369AH	1	1						10-25-99 and After, Right
2	52010371AF	1	1						TUBE, BrakeLeft
3	34201888	2							SCREW, Hex Head, Junction Block, Mounting
4									BLOCK, Brake Line Union
	52009887AC	1	1						[BGK] 3 Way
	52009889AC	1	1						[BGJ] 2 Way
5									TUBE, Brake
	52009884AD	1			61				Junction Block to Rear Hose
	52009886AD	1			31				Junction Block to Rear Hose
		1			84				Junction Block to Rear Hose
6									HOSE, Brake
	52008981	1	1						Left
	52008992	1	1						Right
7	J4200303	4							WASHER, Brake Hose, To Caliper, Mounting
8	06504019	2							BOLT, Banjo, Brake Hose to Caliper, Mounting
9	34201888	4	1						SCREW, Hex Head, Brake Hose Bracket to UCA, Mounting
10									SENSOR, Anti-Lock Brake
	56027921AD	1	1						Left
	56027924AE	1	1		31, 61, 84				Up To and Including 03-29-00, Right
	56027924AG	1	1						03-30-00 and After, Right
11	52009133	2							BRACKET, Brake HoseMounting
12									FASTENER, Push Pin
	06506426AA	3	1						Brake Line-10-25-99 and After, Mounting
	52009234	3	1						Brake Line-Up To and Including 10-24-99, Mounting

DAKOTA (AN)

SERIES	LINE	BODY	ENGINE	TRANSMISSION
L = Quad Cab L = Regular Cab L = Club Cab	1 = Dakota 2WD 5 = Dakota 4WD	31 = CLUB CAB 2-DR 6.5 FT BOX 61 = REG CAB 6.5 FT BOX 84 = CREW CAB 4-DR W.B.1	EPO = 2.5L 4 Cyl. EHO = 3.9L 6 Cyl. EMO = 5.9L 8 Cyl. EVO = 4.7L Magnum EHC = 3.9L SMPI V6 EML = 5.9L V8 MPI Engine EPE = 2.5L POWER TECH I-4 Cyl. EVA = 4.7L V8 MPI	DDC = TRANSMISSION - 5-SPEED HD MANUAL DG4 = TRANSMISSION-MULTI-SPEED AUTO, 45RFE DGK = TRANSMISSION - 4-SPD. AUTOMATIC,42RE DGT = TRANSMISSION - 4-SPD. AUTOMATIC,46RE DGO = AUTO. TRANS.

Lines and Hoses,Front-AN 1
Figure 5-520

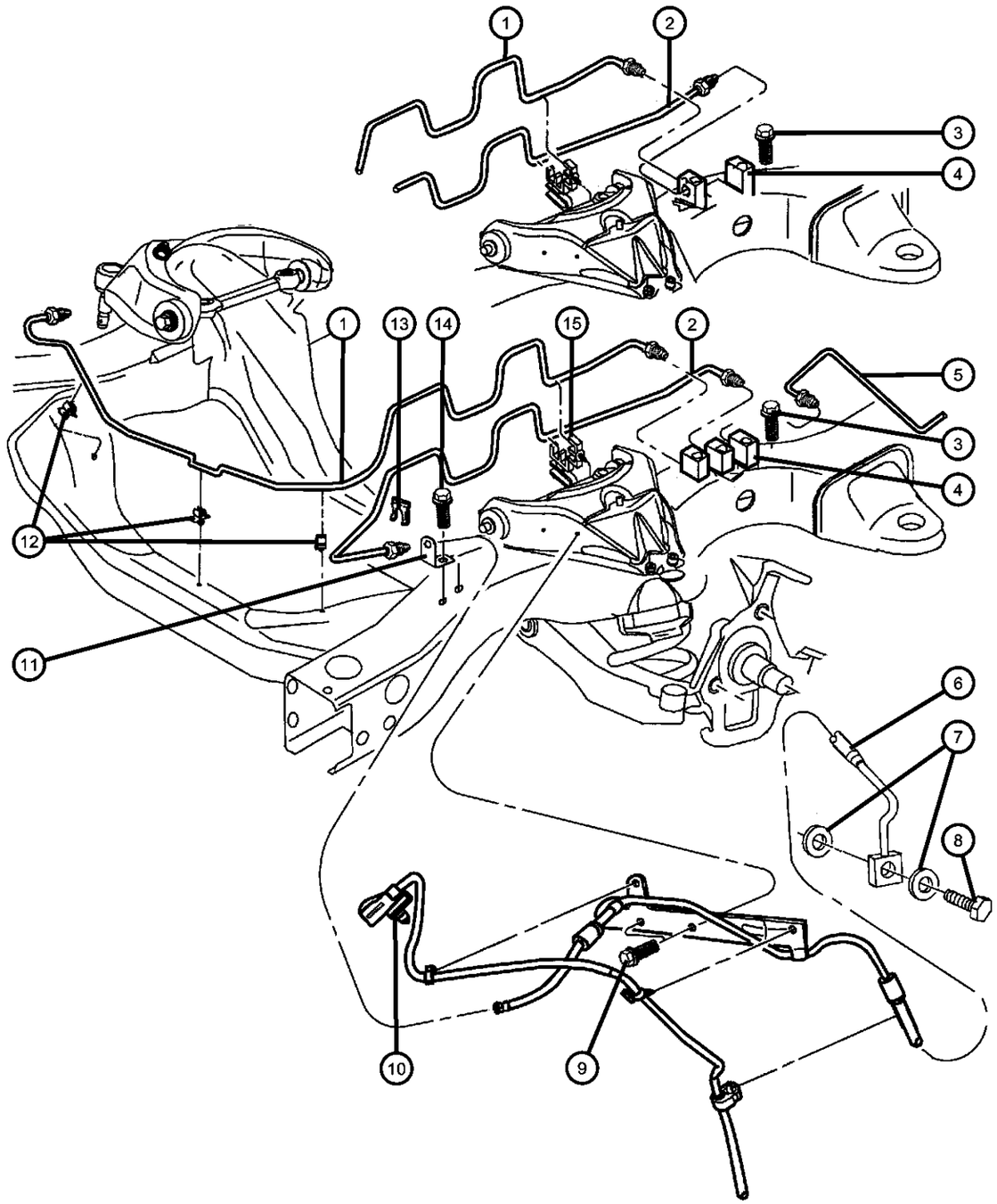

ITEM	PART NUMBER	QTY	LINE	SERIES	BODY	ENGINE	TRANS	TRIM	DESCRIPTION
13	02208893	3							LOCK, Brake HoseMounting
14	34201888	2							SCREW, Hex Head, Brake Hose Bracket, Mounting
15	52128175	1	1						CLIP, Brake Attaching Tube, 3 Way

DAKOTA (AN)

SERIES	LINE	BODY	ENGINE	TRANSMISSION
L = Quad Cab L = Regular Cab L = Club Cab	1 = Dakota 2WD 5 = Dakota 4WD	31 = CLUB CAB 2-DR 6.5 FT BOX 61 = REG CAB 6.5 FT BOX 84 = CREW CAB 4-DR W.B.1	EPO = 2.5L 4 Cyl. EHO = 3.9L 6 Cyl. EMO = 5.9L 8 Cyl. EVO = 4.7L Magnum EHC = 3.9L SMPI V6 EML = 5.9L V8 MPI Engine EPE = 2.5L POWER TECH I-4 Cyl. EVA = 4.7L V8 MPI	DDC = TRANSMISSION - 5-SPEED HD MANUAL DG4 = TRANSMISSION-MULTI-SPEED AUTO, 45RFE DGK = TRANSMISSION - 4-SPD. AUTOMATIC,42RE DGT = TRANSMISSION - 4-SPD. AUTOMATIC,46RE DGO = AUTO. TRANS.

AR = use ase required - = Non illustrrated part

Lines and Hoses,Front-AN 5
Figure 5-530

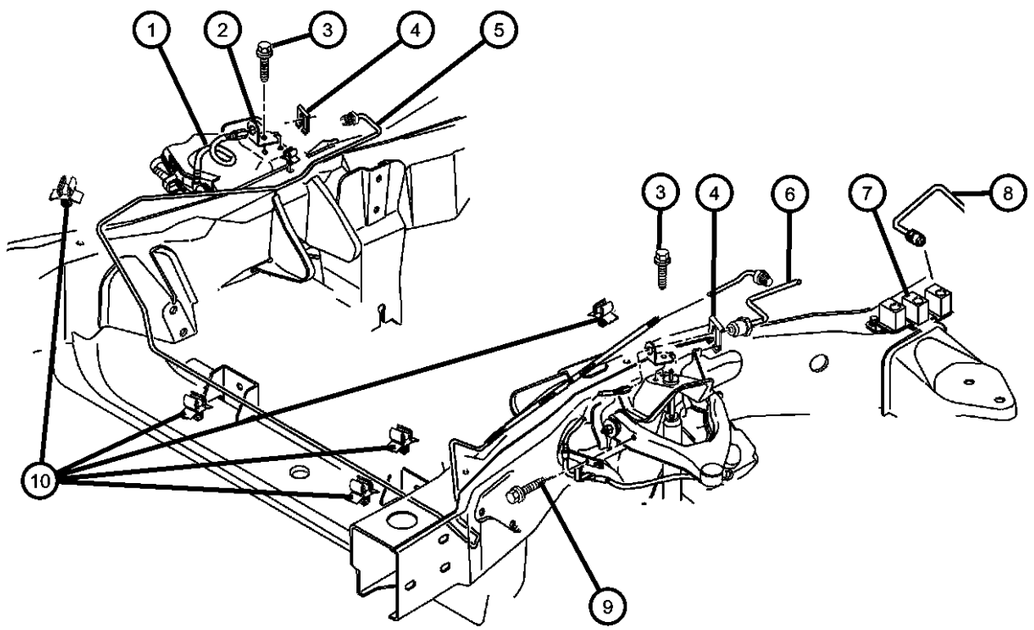

ITEM	PART NUMBER	QTY	LINE	SERIES	BODY	ENGINE	TRANS	TRIM	DESCRIPTION
1									HOSE, Brake
	52009878AC	1	5		84				Right
		1	5		31, 61				Right
	52009879AC	1	5		84				Left
		1	5		31, 61				Left
2	52009133	2							BRACKET, Brake HoseMounting
3	34201888	2							SCREW, Hex Head, Brake Hose Bracket, Mounting
4	02208893	3			31, 61, 84				LOCK, Brake HoseMounting
5									TUBE, Brake
	52009880AD	1	5						Junction Block to Front Brake Hose-Up To and Including 10-24-99, Right
	52009880AE	1	5		31, 61				Junction Block to Front Brake Hose-10-25-99 and After, Right
		1	5		84				Junction Block to Front Brake Hose-10-25-99 and After, Right
6									TUBE, Brake
	52009881AE	1	5		84				[BGJ]-Union Block to Front Brake Hose, Left
		1	5		31, 61				[BGJ]-Union Block to Front Brake Hose, Left
	52009883AF	1	5		31, 61				[BGK]-Union Block to Front Brake Hose, Left
		1	5		84				[BGK]-Union Block to Front Brake Hose, Left
7									BLOCK, Brake Line Union
	52009882AD	1	5						[BGJ]-2 Way
	52009888AC	1	5		31, 61				[BGK]-3 Way
		1	5		84				[BGK]-3 Way
8									TUBE, Brake
	52009884AD	1			61				Junction Block to Rear Brake Hose
	52009886AD	1			31				Junction Block to Rear Brake Hose
		1			84				Junction Block to Rear Brake Hose
9	34201888	1							SCREW, Hex Head, Brake Hose Bracket to UCA, Mounting

DAKOTA (AN)

SERIES	LINE	BODY	ENGINE	TRANSMISSION
L = Quad Cab	1 = Dakota 2WD	31 = CLUB CAB 2-DR 6.5 FT BOX	EPO = 2.5L 4 Cyl.	DDC = TRANSMISSION - 5-SPEED HD MANUAL
L = Regular Cab	5 = Dakota 4WD	61 = REG CAB 6.5 FT BOX	EHO = 3.9L 6 Cyl.	DG4 = TRANSMISSION-MULTI-SPEED AUTO, 45RFE
L = Club Cab		84 = CREW CAB 4-DR W.B.1	EMO = 5.9L 8 Cyl.	DGK = TRANSMISSION - 4-SPD. AUTOMATIC,42RE
			EVO = 4.7L Magnum	DGT = TRANSMISSION - 4-SPD. AUTOMATIC,46RE
			EHC = 3.9L SMPI V6	DGO = AUTO. TRANS.
			EML = 5.9L V8 MPI Engine	
			EPE = 2.5L POWER TECH I-4 Cyl.	
			EVA = 4.7L V8 MPI	

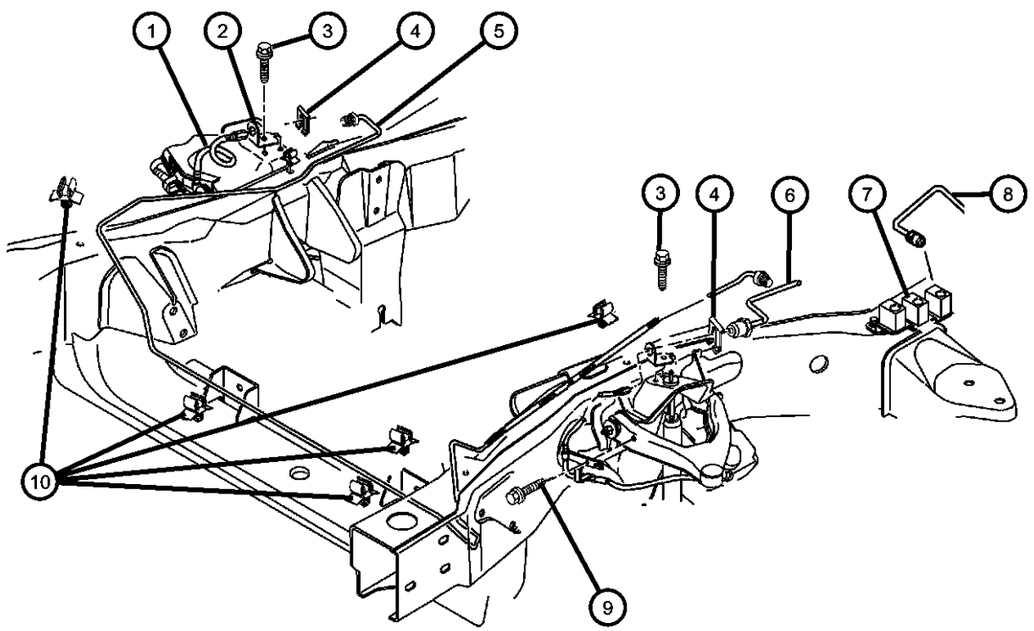

ITEM	PART NUMBER	QTY	LINE	SERIES	BODY	ENGINE	TRANS	TRIM	DESCRIPTION
10									FASTENER, Push Pin
	06506426AA	4	5		31, 61				Brake Tube to Crossmember, Mounting
		4	5		84				Brake Tube to Crossmember, Mounting

DAKOTA (AN)

SERIES	LINE	BODY	ENGINE	TRANSMISSION
L = Quad Cab	1 = Dakota 2WD	31 = CLUB CAB 2-DR 6.5 FT BOX	EPO = 2.5L 4 Cyl.	DDC = TRANSMISSION - 5-SPEED HD MANUAL
L = Regular Cab	5 = Dakota 4WD	61 = REG CAB 6.5 FT BOX	EHO = 3.9L 6 Cyl.	DG4 = TRANSMISSION-MULTI-SPEED AUTO, 45RFE
L = Club Cab		84 = CREW CAB 4-DR W.B.1	EMO = 5.9L 8 Cyl.	DGK = TRANSMISSION - 4-SPD. AUTOMATIC,42RE
			EVO = 4.7L Magnum	DGT = TRANSMISSION - 4-SPD. AUTOMATIC,46RE
			EHC = 3.9L SMPI V6	DGO = AUTO. TRANS.
			EML = 5.9L V8 MPI Engine	
			EPE = 2.5L POWER TECH I-4 Cyl.	
			EVA = 4.7L V8 MPI	

Lines and Hoses,Rear and Chassis
Figure 5-540

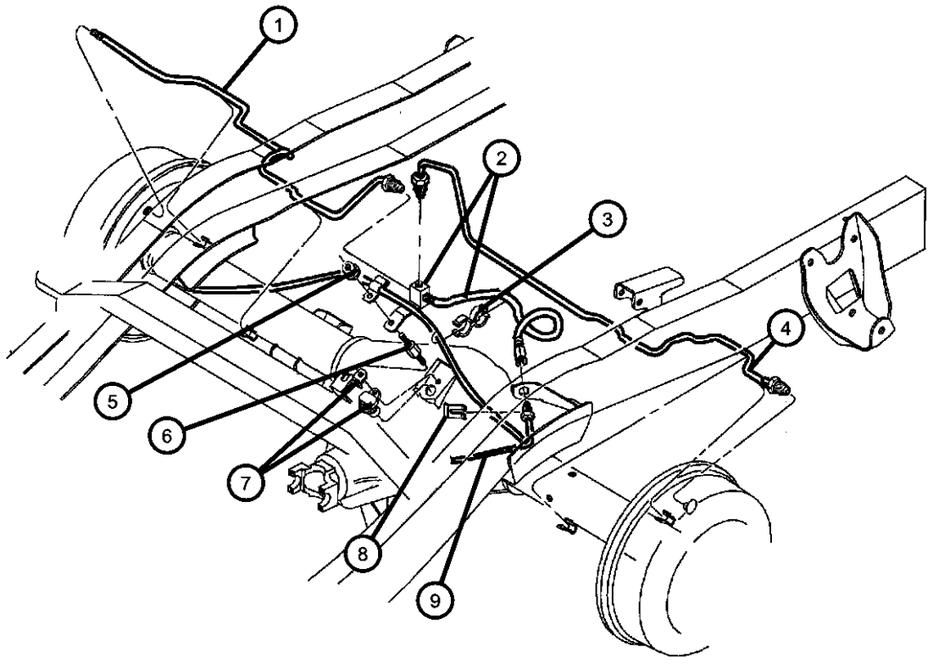

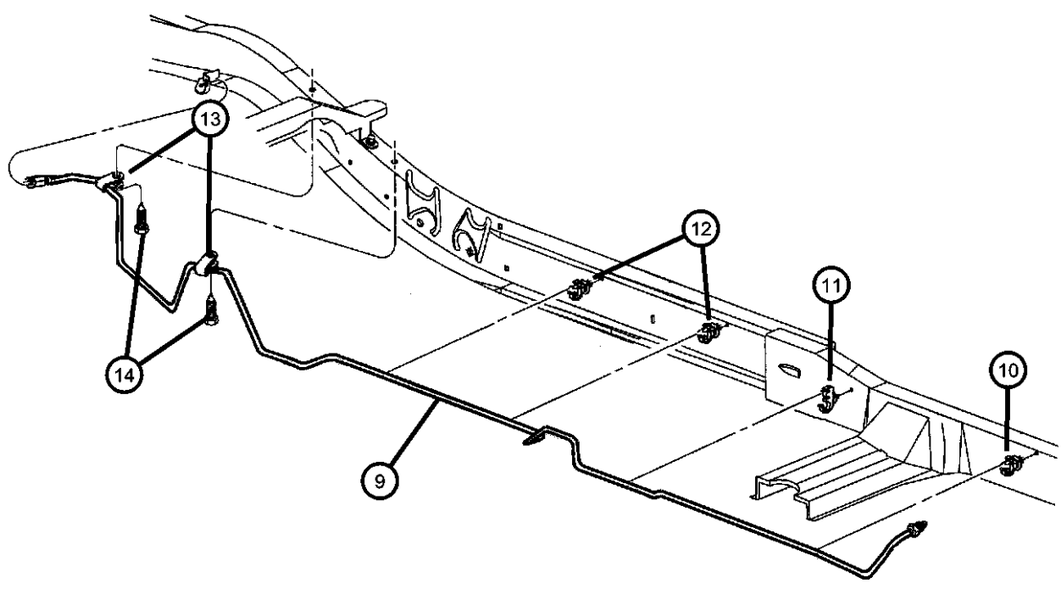

ITEM	PART NUMBER	QTY	LINE	SERIES	BODY	ENGINE	TRANS	TRIM	DESCRIPTION
Note:Sales Codes; [BKA]=Brakes - 11‘ x 2‘ Rear Drum [BKE]=Brakes - 9‘ x 2.5‘ Rear Drum [DBB]=Transmissions - All Manual [DG0]=Transmissions - All Automatic [DRA]=Axle - Rear,Corporate 8.25 [DRB]=Axle - Rear,Corporate 9.25									
1									TUBE, Brake
	52009852AC	1			84				[DRB,BKA], Right
		1			31, 61				[DRB,BKA], Right
	52009890AB	1			31, 61				[DRA,BKE], Right
	52009908AC	1			84				[DRA,BKA], Right
		1			31, 61				[DRA,BKA], Right
	52009940AC	1			31, 61				[DRB,BKE], Right
2	52008984AE	1							HOSE, Brake, With Tee, Rear
3	56021260	1			31, 61, 84				CLIP, Sensor, Brake
4									TUBE, Brake
	52009853AC	1			84				[DRB,BKA], Left
		1			31, 61				[DRB,BKA], Left
	52009891AB	1			31, 61				[DRA,BKE], Left
	52009909AC	1			84				[DRA,BKA], Left
		1			31, 61				[DRA,BKA], Left
	52009941AC	1			31, 61				[DRB,BKE], Left
5	00152472	1							NUT, Hex Flange Lock, .312-18, Locking Clip to RWAL Stud
6	06035887	1							STUD, Axle Housing, Double Ended -Sensor, Mounting
7	56028187AD	1							SENSOR, Wheel Speed
8	02208893	3							LOCK, Brake Hose
9									TUBE, Brake
	52009884AD	1			61				Main Body
	52009886AD	1			31				Main Body
		1			84				Main Body
10									CLIP, Brake Line
	52007914	2			61				Brake Tube to Frame, Mounting

DAKOTA (AN)

SERIES	LINE	BODY	ENGINE	TRANSMISSION
L = Quad Cab L = Regular Cab L = Club Cab	1 = Dakota 2WD 5 = Dakota 4WD	31 = CLUB CAB 2-DR 6.5 FT BOX 61 = REG CAB 6.5 FT BOX 84 = CREW CAB 4-DR W.B.1	EPO = 2.5L 4 Cyl. EHO = 3.9L 6 Cyl. EMO = 5.9L 8 Cyl. EVO = 4.7L Magnum EHC = 3.9L SMPI V6 EML = 5.9L V8 MPI Engine EPE = 2.5L POWER TECH I-4 Cyl. EVA = 4.7L V8 MPI	DDC = TRANSMISSION - 5-SPEED HD MANUAL DG4 = TRANSMISSION-MULTI-SPEED AUTO, 45RFE DGK = TRANSMISSION - 4-SPD. AUTOMATIC,42RE DGT = TRANSMISSION - 4-SPD. AUTOMATIC,46RE DGO = AUTO. TRANS.

Lines and Hoses,Rear and Chassis
Figure 5-540

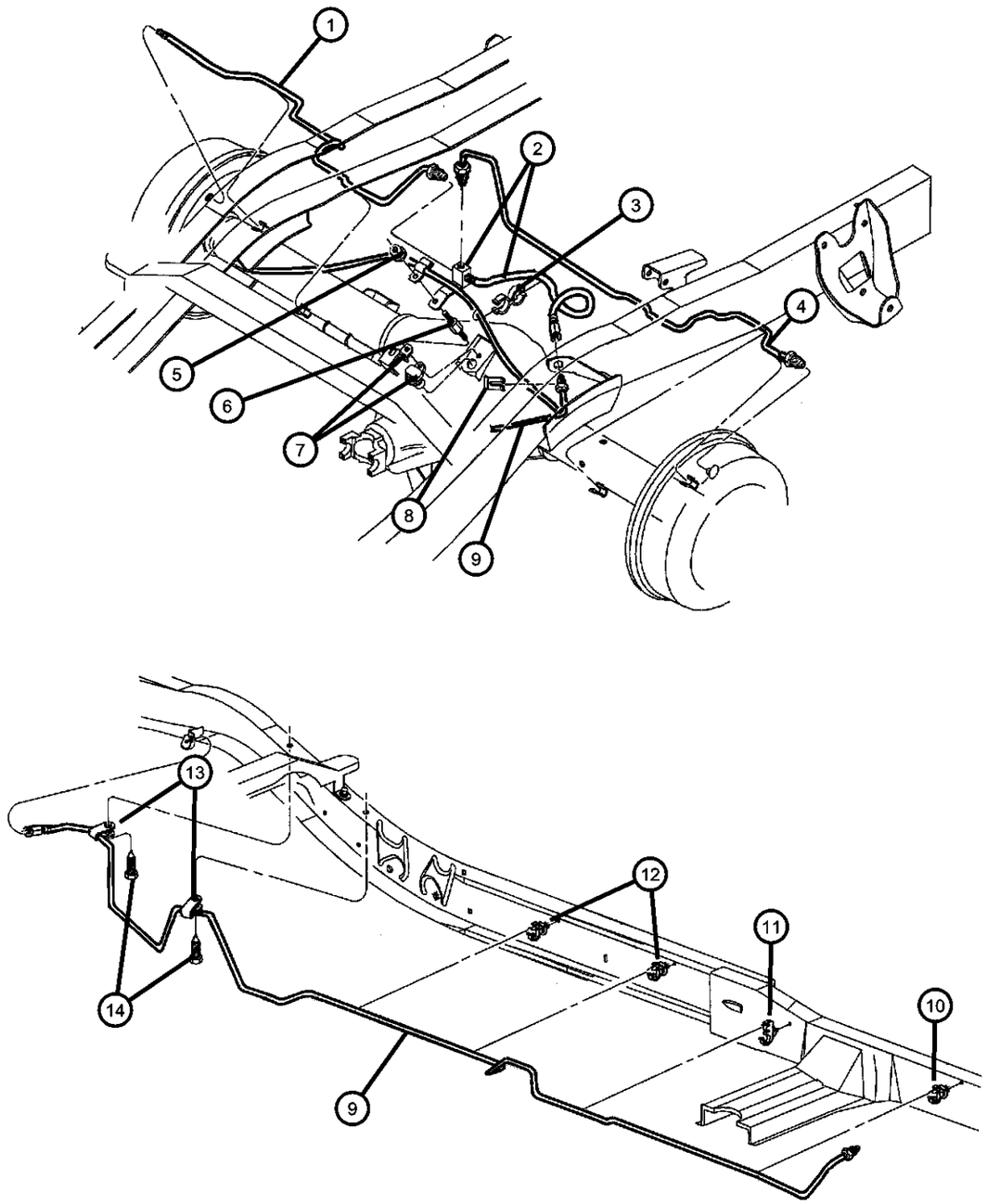

ITEM	PART NUMBER	QTY	LINE	SERIES	BODY	ENGINE	TRANS	TRIM	DESCRIPTION
		3			31, 84				Brake Tube to Frame, Mounting
11	52102304	1							CLIP, 3 Way, Brake Body Tube, Mounting
12	52102304	1							CLIP, Sensor, Serviced with Front Brake Sensor., (NOT SERVICED)
13	52008053	2							CLIP, Brake Line, Chassis tube to Frame, Mounting
14	34201888	2							SCREW, Hex Head, Brake Tube to Frame, Mounting

DAKOTA (AN)

SERIES	LINE	BODY	ENGINE	TRANSMISSION
L = Quad Cab	1 = Dakota 2WD	31 = CLUB CAB 2-DR 6.5 FT BOX	EPO = 2.5L 4 Cyl.	DDC = TRANSMISSION - 5-SPEED HD MANUAL
L = Regular Cab	5 = Dakota 4WD	61 = REG CAB 6.5 FT BOX	EHO = 3.9L 6 Cyl.	DG4 = TRANSMISSION-MULTI-SPEED AUTO, 45RFE
L = Club Cab		84 = CREW CAB 4-DR W.B.1	EMO = 5.9L 8 Cyl.	DGK = TRANSMISSION - 4-SPD. AUTOMATIC,42RE
			EVO = 4.7L Magnum	DGT = TRANSMISSION - 4-SPD. AUTOMATIC,46RE
			EHC = 3.9L SMPI V6	DGO = AUTO. TRANS.
			EML = 5.9L V8 MPI Engine	
			EPE = 2.5L POWER TECH I-4 Cyl.	
			EVA = 4.7L V8 MPI	

AR = use ase required - = Non illustrrated part

Pedals,Brake and Clutch
Figure 5-610

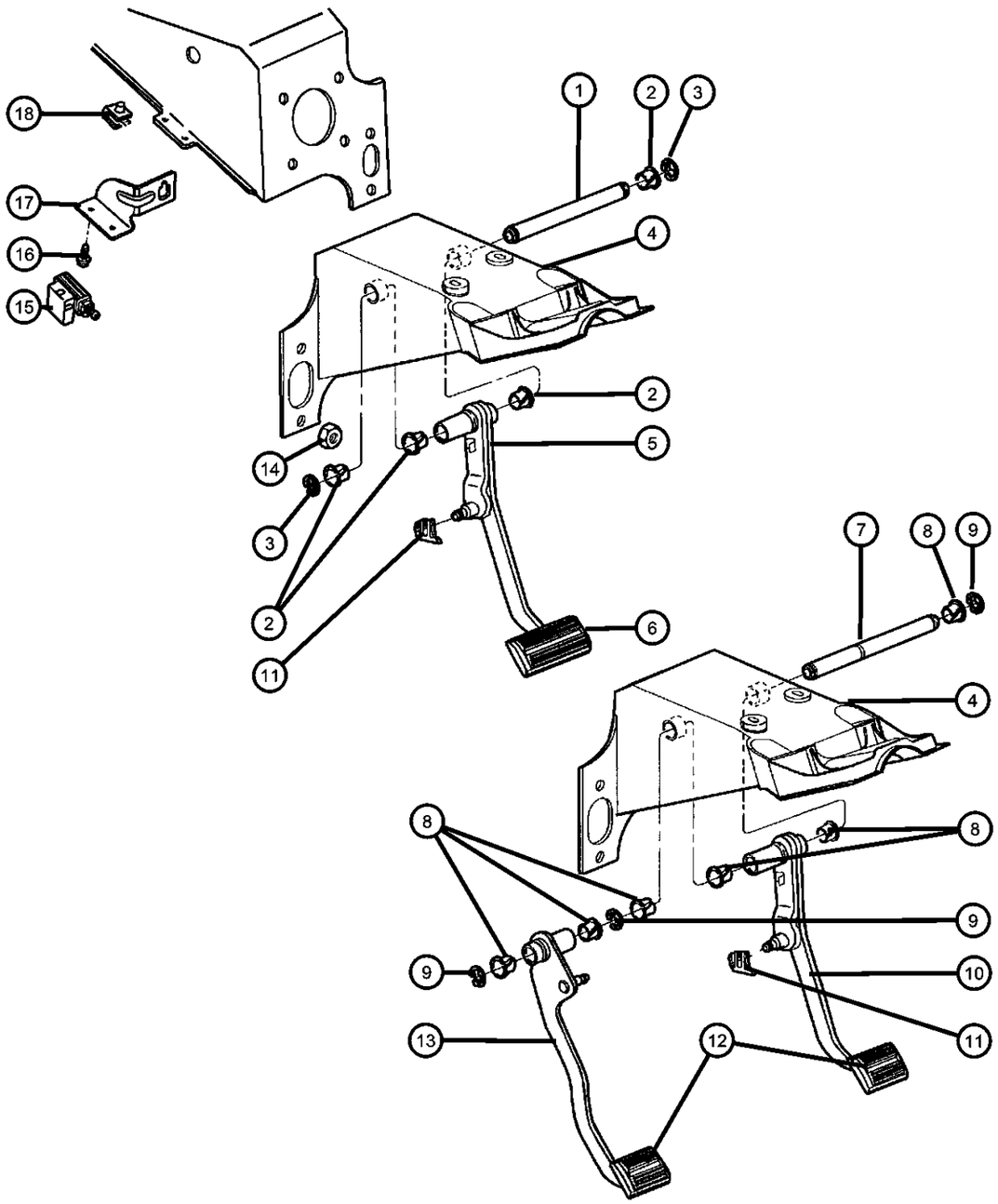

ITEM	PART NUMBER	QTY	LINE	SERIES	BODY	ENGINE	TRANS	TRIM	DESCRIPTION
Note: DBB = ALL MANUAL TRANSMISSIONS— DGO= ALL AUTOMATIC TRANSMISSIONS									
1	52078842	1							SHAFT, Brake Pedal Pivot, [DG0]
2	04294639	4							BUSHING, Clutch and Brake Pedal, [DG0]
3	04103262	2							RETAINER, Shaft, [DG0]
4									BRACKET, Steering Column
	55351183AB	1			31, 61				
	55351184AB	1			84				
5	52009837AB	1							PEDAL, Brake, [DG0]
6									PAD, Pedal
	04019660	1			31, 61, 84				[DG0] With Horizontal Ribs
	04779027	1							[DG0] With Vertical Ribs
7	52079290	1							SHAFT, Brake Pedal Pivot, [DBB]
8	04294639	6							BUSHING, Clutch and Brake Pedal, [DBB]
9	04103262	3			31, 61, 84				RETAINER, Shaft, [DBB]
10	52009836AB	1							PEDAL, Brake, [DBB]
11	04294036	1							CLIP
12	04019715	1							PAD, Pedal, [DBB]
13	52078748	1							PEDAL, Clutch, [DBB]
14	06503269	4							NUT, Hex, M10-1.5, Booster to Dash, Mounting
15	56045043AC	1							SWITCH, Stop Lamp
16	06101718	2							SCREW AND WASHER, Oval Head, M6x1x25, Brake Lamp Switch Bracket, Mounting
17	56020144AD	1							BRACKET, Brake Lamp SwitchMounting
18	06101712	2							NUT, U, M6x1.00, Brake Lamp Switch Bracket, Mounting

DAKOTA (AN)

SERIES	LINE	BODY	ENGINE	TRANSMISSION
L = Quad Cab	1 = Dakota 2WD	31 = CLUB CAB 2-DR 6.5 FT BOX	EPO = 2.5L 4 Cyl.	DDC = TRANSMISSION - 5-SPEED HD MANUAL
L = Regular Cab	5 = Dakota 4WD	61 = REG CAB 6.5 FT BOX	EHO = 3.9L 6 Cyl.	DG4 = TRANSMISSION-MULTI-SPEED AUTO, 45RFE
L = Club Cab		84 = CREW CAB 4-DR W.B.1	EMO = 5.9L 8 Cyl.	DGK = TRANSMISSION - 4-SPD. AUTOMATIC,42RE
			EVO = 4.7L Magnum	DGT = TRANSMISSION - 4-SPD. AUTOMATIC,46RE
			EHC = 3.9L SMPI V6	DGO = AUTO. TRANS.
			EML = 5.9L V8 MPI Engine	
			EPE = 2.5L POWER TECH I-4 Cyl.	
			EVA = 4.7L V8 MPI	

Group - 6

Clutch

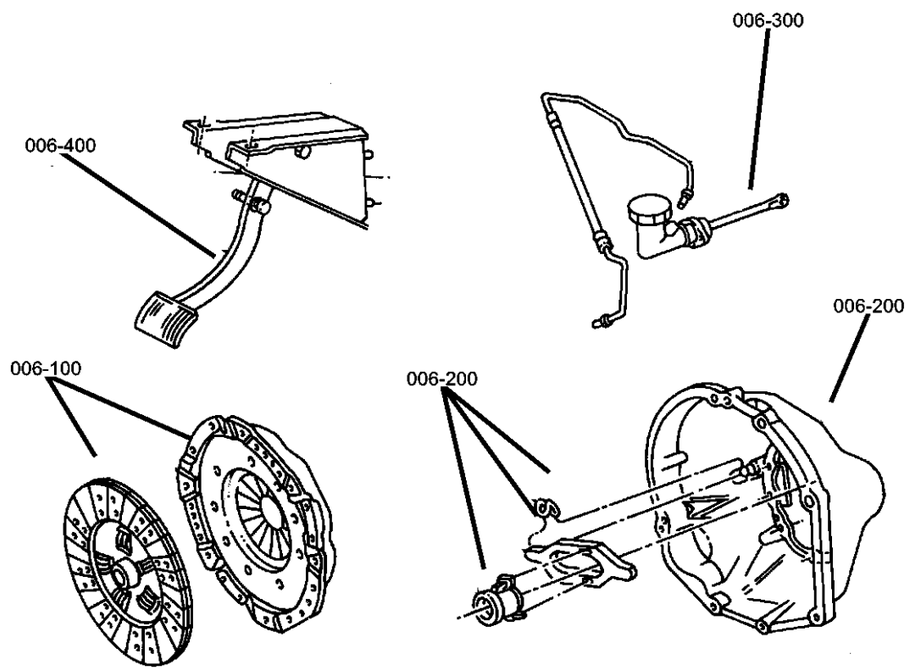

006-100 Clutch	006-200 Clutch Housing	006-300 Clutch Controls	006-400 Clutch Pedal
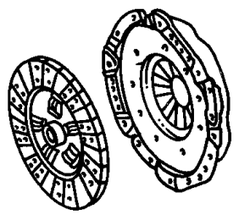	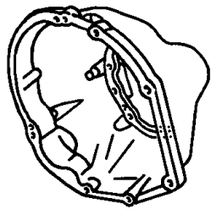	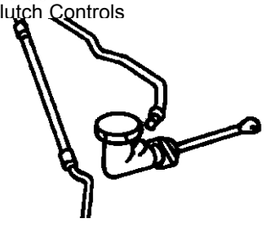	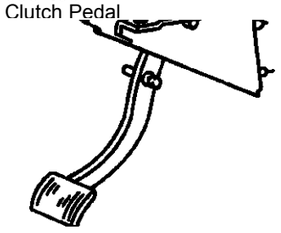

Group - 6 Clutch

Illustration Title — Group-Fig. No.

Clutch
Clutch Assembly ..... Fig. 6 - 110

Clutch Housing
Housing And Pan,Clutch ..... Fig. 6 - 210

Clutch Controls
Controls,Hydraulic Clutch ..... Fig. 6 - 310

Clutch Pedal
Pedal,Clutch ..... Fig. 6 - 410

Clutch Assembly
Figure 6-110

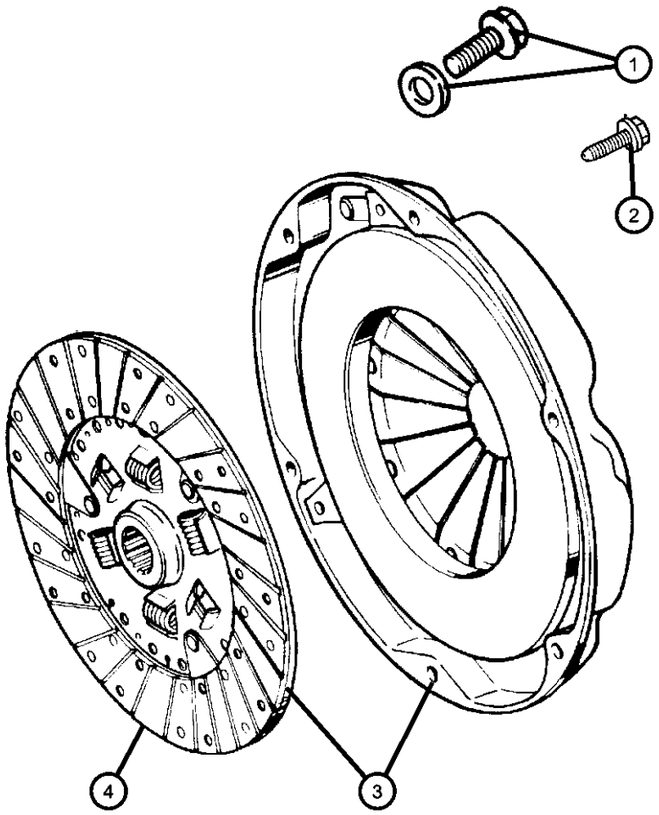

ITEM	PART NUMBER	QTY	LINE	SERIES	BODY	ENGINE	TRANS	TRIM	DESCRIPTION
Note:Sales Codes;									
[DBB]=All Manual Transmissions									
[DDC]=5-Speed Heavy Duty Manual Trasnmission									
[DDK]=5-Speed Heavy Duty Manual Transmission									
[EH0]=All V6 Engines									
[EP0]=All 2.5L 4 Cylinder Gas Engines									
[EV0]=All 4.7L V8 Engines									
1	06035626	6				EH0, EV0	DBB		BOLT, Hex Flange Head, Pressure Plate to Flywheel, Mounting
2	06101452	6				EP0	DDK		BOLT, Pressure Plate to Flywheel, Mounting
3									CLUTCH KIT, Pressure Plate and Disc
	05013024AB	1				EP0	DDK		
	05016562AA	1				EH0	DDC		
	52104437AA	1				EV0	DDC		
4									DISC, Clutch
	52104438AA	1				EV0	DDC		
	52107707AB	1				EP0	DDK		
	53008259AB	1				EH0	DDC		

DAKOTA (AN)

SERIES	LINE	BODY	ENGINE	TRANSMISSION
L = Quad Cab	1 = Dakota 2WD	31 = CLUB CAB 2-DR 6.5 FT BOX	EPO = 2.5L 4 Cyl.	DDC = TRANSMISSION - 5-SPEED HD MANUAL
L = Regular Cab	5 = Dakota 4WD	61 = REG CAB 6.5 FT BOX	EHO = 3.9L 6 Cyl.	DG4 = TRANSMISSION-MULTI-SPEED AUTO, 45RFE
L = Club Cab		84 = CREW CAB 4-DR W.B.1	EMO = 5.9L 8 Cyl.	DGK = TRANSMISSION - 4-SPD. AUTOMATIC,42RE
			EVO = 4.7L Magnum	DGT = TRANSMISSION - 4-SPD. AUTOMATIC,46RE
			EHC = 3.9L SMPI V6	DGO = AUTO. TRANS.
			EML = 5.9L V8 MPI Engine	
			EPE = 2.5L POWER TECH I-4 Cyl.	
			EVA = 4.7L V8 MPI	

Housing And Pan,Clutch
Figure 6-210

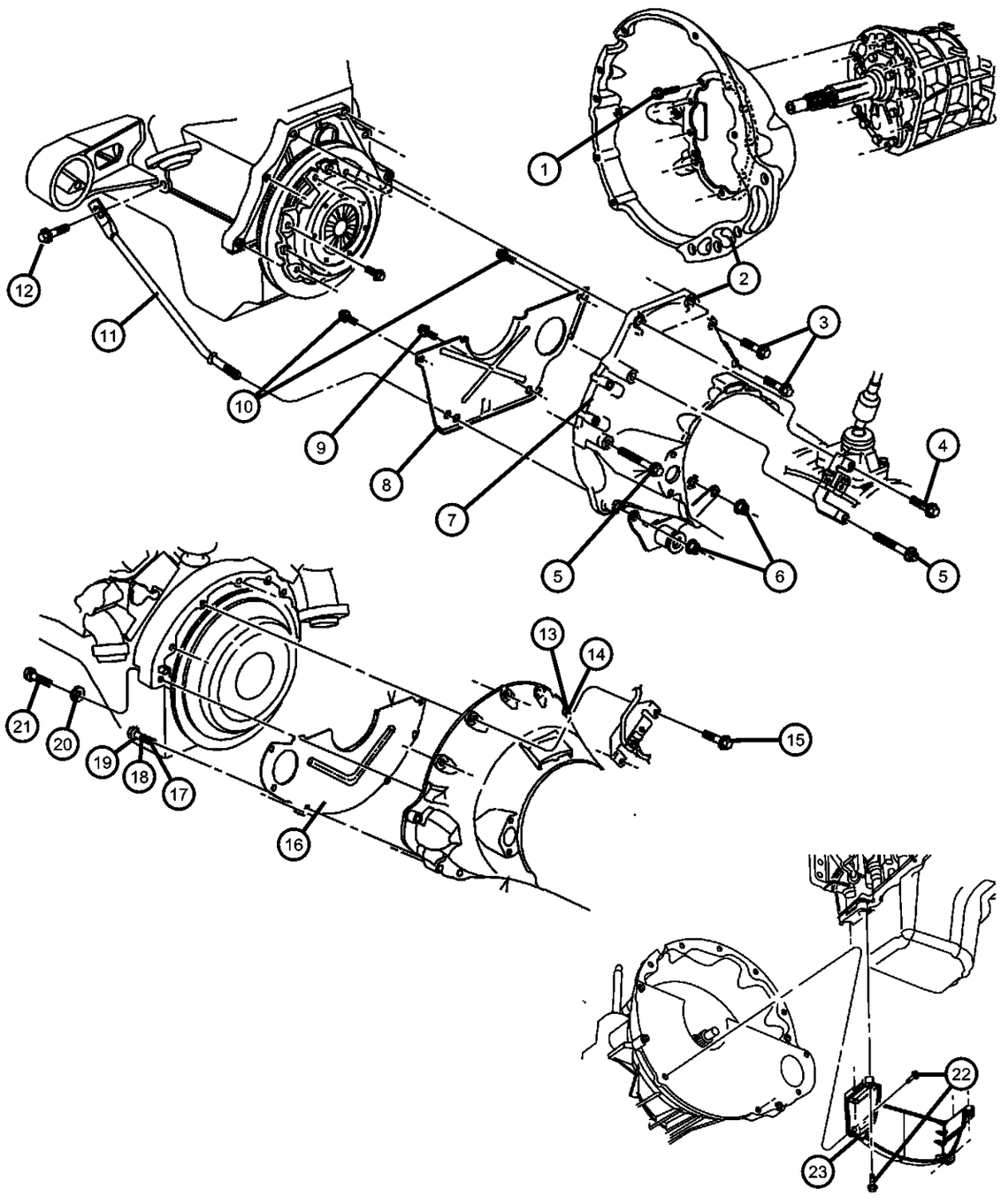

ITEM	PART NUMBER	QTY	LINE	SERIES	BODY	ENGINE	TRANS	TRIM	DESCRIPTION
Note: Sales Codes [DBB]=All Manual Transmissions [DDC]=5-Speed Heavy Duty Manual Trasnmission [DDK]=5-Speed Heavy Duty Manual Transmission [EH0]=All V6 Engines [EP0]=All 2.5L 4 Cylinder Gas Engines [EV0]=All 4.7L V8 Engines									
1	06503299	9					DDK		BOLT, Hex Head, Clutch Housing to Engine Block, Mounting
2	52107566AB	1	1			EP0	DDK		HOUSING, Clutch
3	11504922	2	1			EP0	DDK		BOLT, Hex Head, M12x1.75x50, Clutch Housing to Engine Block, Mounting
4	06100345	2	1			EP0	DDK		SCREW AND WASHER, Hex Flange Head, M12x1.75x45, Clutch Housing to Engine Block, Mounting
5	34201837	2	1			EP0	DDK		BOLT, Hex Flange Head, M12x1.75x90, Clutch Housing to Engine Block, Mounting
6	06502697	2				EP0	DBB		NUT, Hex Flange Lock, M12x1.75, Clutch Housing to Engine Block, Mounting
7	53006010	1				EP0			GROMMET, Timing Probe
8	53003382AB	1	1			EP0	DDK		SHIELD, Clutch Housing Dust
9	11505098	1	1			EP0	DDK		BOLT, Hex Flange Head, M12x1.75x60, Dust Shield to Clutch Housing, Mounting
10	11500986	2	1			EP0	DDK		BOLT, Hex Flange Head, M8x2.12x16, Strut to Clutch Housing, Mounting
11	52107598	1	1			EP0	DDK		STRUT, Engine
12	06035579	1	1			EP0	DDK		SCREW AND WASHER, Hex Head, .312-18x1.00, Strut to Engine Block, Mounting
13	52117709	1				EH0, EM0			GROMMET, Timing Probe
14	52107761AA	1				EV0	DDC		PLUG, Timing Probe
15									SCREW AND WASHER
	06022266	5				EH0	DDC		Clutch Housing to Engine Block, Mounting
		4				EV0	DDC		Clutch Housing to Engine Block, Mounting
16	52107753AC	1				EH0, EV0	DDC		SHIELD, Clutch Housing Dust

DAKOTA (AN)

SERIES	LINE	BODY	ENGINE	TRANSMISSION
L = Quad Cab L = Regular Cab L = Club Cab	1 = Dakota 2WD 5 = Dakota 4WD	31 = CLUB CAB 2-DR 6.5 FT BOX 61 = REG CAB 6.5 FT BOX 84 = CREW CAB 4-DR W.B.1	EPO = 2.5L 4 Cyl. EHO = 3.9L 6 Cyl. EMO = 5.9L 8 Cyl. EVO = 4.7L Magnum EHC = 3.9L SMPI V6 EML = 5.9L V8 MPI Engine EPE = 2.5L POWER TECH I-4 Cyl. EVA = 4.7L V8 MPI	DDC = TRANSMISSION - 5-SPEED HD MANUAL DG4 = TRANSMISSION-MULTI-SPEED AUTO, 45RFE DGK = TRANSMISSION - 4-SPD. AUTOMATIC,42RE DGT = TRANSMISSION - 4-SPD. AUTOMATIC,46RE DGO = AUTO. TRANS.

Housing And Pan,Clutch
Figure 6-210

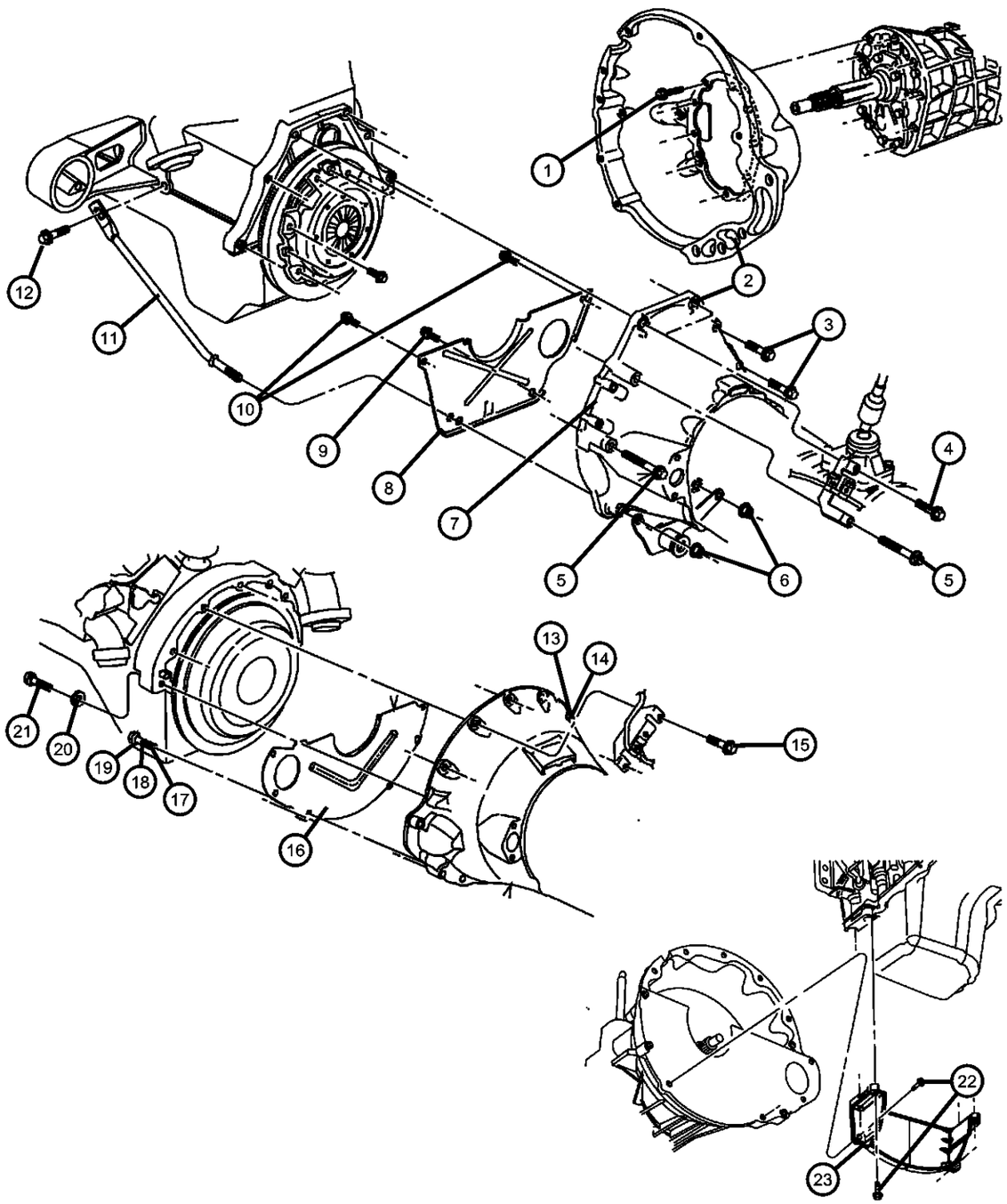

ITEM	PART NUMBER	QTY	LINE	SERIES	BODY	ENGINE	TRANS	TRIM	DESCRIPTION
17	06023092	1				EH0, EV0	DDC		SCREW AND WASHER, Hex Head, .25-20x.50, Dust Shield to Clutch Housing, Mounting
18	06033358	2	1			EH0, EV0	DDC		SCREW AND WASHER, Hex Head Locking, .437-14x1.25, Dust Shield to Clutch Housing, Mounting
19	06101985	2	1			EH0, EV0	DDC		SCREW AND WASHER, M10x1.50x45.00, Dust Shield to Clutch Housing, Mounting
20	06028758	2				EH0, EV0	DDC		WASHER, Coned, .480x.885x.121, Engine Block to Clutch Housing, Mounting
21	06028758	2							SCREW, Hex Head, (NOT SERVICED)
22	06101985	6				EV0	DBB		SCREW AND WASHER, M10x1.50x45.00, Dust Structural Cover to Engine/Transmission, Mounting
23	53020974	1				EV0	DBB		COVER, Dust Structural

DAKOTA (AN)

SERIES	LINE	BODY	ENGINE	TRANSMISSION
L = Quad Cab L = Regular Cab L = Club Cab	1 = Dakota 2WD 5 = Dakota 4WD	31 = CLUB CAB 2-DR 6.5 FT BOX 61 = REG CAB 6.5 FT BOX 84 = CREW CAB 4-DR W.B.1	EPO = 2.5L 4 Cyl. EHO = 3.9L 6 Cyl. EMO = 5.9L 8 Cyl. EVO = 4.7L Magnum EHC = 3.9L SMPI V6 EML = 5.9L V8 MPI Engine EPE = 2.5L POWER TECH I-4 Cyl. EVA = 4.7L V8 MPI	DDC = TRANSMISSION - 5-SPEED HD MANUAL DG4 = TRANSMISSION-MULTI-SPEED AUTO, 45RFE DGK = TRANSMISSION - 4-SPD. AUTOMATIC,42RE DGT = TRANSMISSION - 4-SPD. AUTOMATIC,46RE DGO = AUTO. TRANS.

Controls,Hydraulic Clutch
Figure 6-310

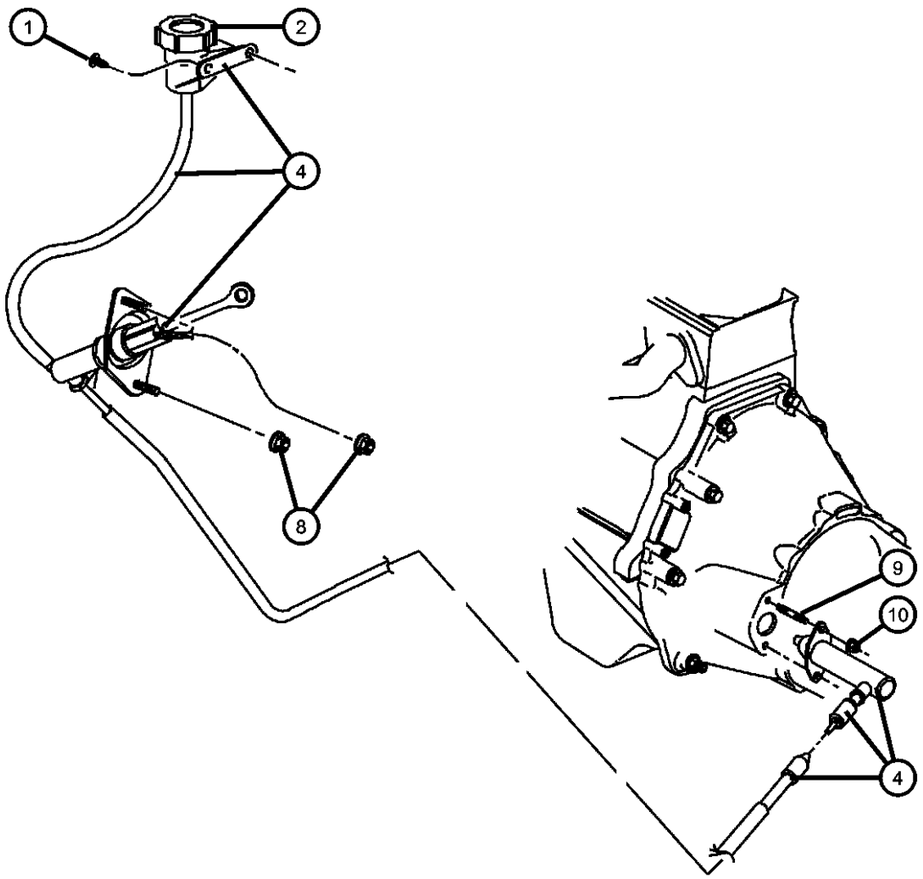

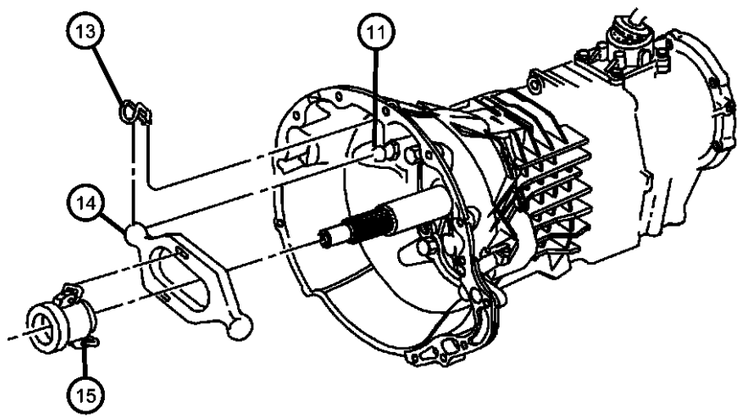

ITEM	PART NUMBER	QTY	LINE	SERIES	BODY	ENGINE	TRANS	TRIM	DESCRIPTION
Note: Sales Codes [DBB]=All Manual Transmissions [EH0]=All V6 Engines [EL0]=All 5.2L V8 Engines [EP0]=All 2.5L 4 Cylinder Gas Engines									
1	06032988	2					DBB		SCREW, Clutch Master Cylinder Reservoir to Dash, Mounting
2	04720156	1					DBB		CAP, Clutch Reservoir
-3	04720157	1					DBB		DIAPHRAGM, Clutch Reservoir
4									HYDRAULIC ASSEMBLY, Clutch Master Cylinder
	04883516AC	1				EP0	DBB		
	04883517AC	1				EH0, EV0	DBB		
-5	53007944AB	1					DBB		SWITCH, Clutch Starter Interlock
-6	05015960AA	1					DBB		COVER, Switch
-7	05015260AA	1					DBB		CLIP, Clutch Tube
8	06503269	2					DBB		NUT, Hex, M10-1.5, Clutch Master Cylinder to Dash, Mounting
9	06032878	2					DBB		STUD, .312-18x2.00, Clutch Slave Cylinder to Clutch Housing, Mounting
10	00152472	2					DBB		NUT, Clutch Slave Cylinder to Clutch Housing, Mounting
11	52087542	1	1, 5				DDK		PIVOT, Clutch Release
-12	06022190	1	1, 5				DDK		WASHER
13	04338855	1					DBB		SPRING, Clutch Release, Clutch Release Pivot, Mounting
14	52107555	1					DBB		LEVER, Clutch Release
15	53008342	1					DBB		BEARING, Clutch Release

DAKOTA (AN)

SERIES	LINE	BODY	ENGINE	TRANSMISSION
L = Quad Cab L = Regular Cab L = Club Cab	1 = Dakota 2WD 5 = Dakota 4WD	31 = CLUB CAB 2-DR 6.5 FT BOX 61 = REG CAB 6.5 FT BOX 84 = CREW CAB 4-DR W.B.1	EPO = 2.5L 4 Cyl. EHO = 3.9L 6 Cyl. EMO = 5.9L 8 Cyl. EVO = 4.7L Magnum EHC = 3.9L SMPI V6 EML = 5.9L V8 MPI Engine EPE = 2.5L POWER TECH I-4 Cyl. EVA = 4.7L V8 MPI	DDC = TRANSMISSION - 5-SPEED HD MANUAL DG4 = TRANSMISSION-MULTI-SPEED AUTO, 45RFE DGK = TRANSMISSION - 4-SPD. AUTOMATIC,42RE DGT = TRANSMISSION - 4-SPD. AUTOMATIC,46RE DGO = AUTO. TRANS.

Pedal,Clutch
Figure 6-410

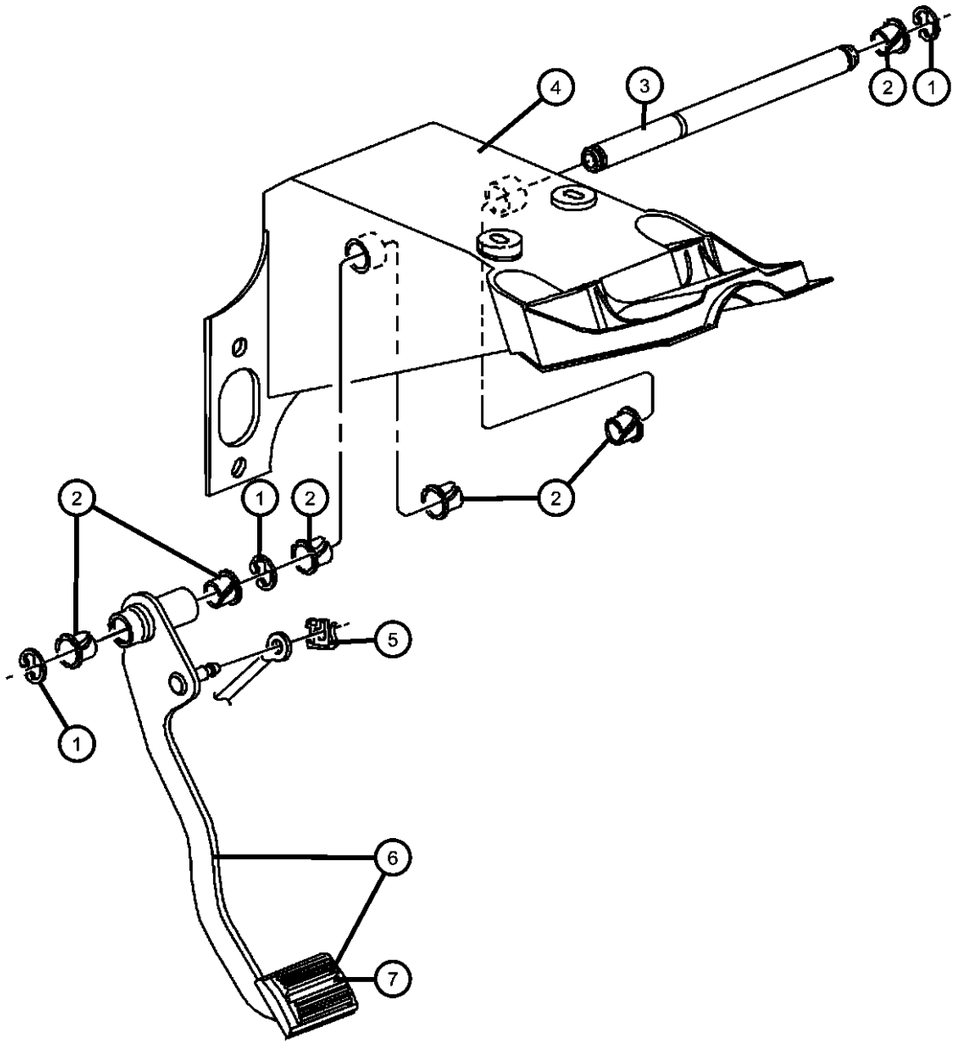

ITEM	PART NUMBER	QTY	LINE	SERIES	BODY	ENGINE	TRANS	TRIM	DESCRIPTION
Note: Sales Codes									
[DBB]=All Manual Transmissions									
1	04103262	3					DBB		RETAINER, Shaft
2	04294639	6					DBB		BUSHING, Clutch and Brake Pedal, Shaft
3	52079290	1					DBB		SHAFT, Clutch and Brake Pedal Pivot
4									BRACKET, Steering Column
	55351183AB	1							Body Style 31 and 61, Mounting
	55351184AB	1							Body Style 84, Mounting
5	04294036	1					DBB		CLIP, Clutch Master Cylinder Rod to Pedal, Mounting
6	52078748	1					DBB		PEDAL, Clutch
7	04019715	1					DBB		PAD, Pedal

DAKOTA (AN)

SERIES	LINE	BODY	ENGINE	TRANSMISSION
L = Quad Cab	1 = Dakota 2WD	31 = CLUB CAB 2-DR 6.5 FT BOX	EPO = 2.5L 4 Cyl.	DDC = TRANSMISSION - 5-SPEED HD MANUAL
L = Regular Cab	5 = Dakota 4WD	61 = REG CAB 6.5 FT BOX	EHO = 3.9L 6 Cyl.	DG4 = TRANSMISSION-MULTI-SPEED AUTO, 45RFE
L = Club Cab		84 = CREW CAB 4-DR W.B.1	EMO = 5.9L 8 Cyl.	DGK = TRANSMISSION - 4-SPD. AUTOMATIC,42RE
			EVO = 4.7L Magnum	DGT = TRANSMISSION - 4-SPD. AUTOMATIC,46RE
			EHC = 3.9L SMPI V6	DGO = AUTO. TRANS.
			EML = 5.9L V8 MPI Engine	
			EPE = 2.5L POWER TECH I-4 Cyl.	
			EVA = 4.7L V8 MPI	

Group - 7

Cooling

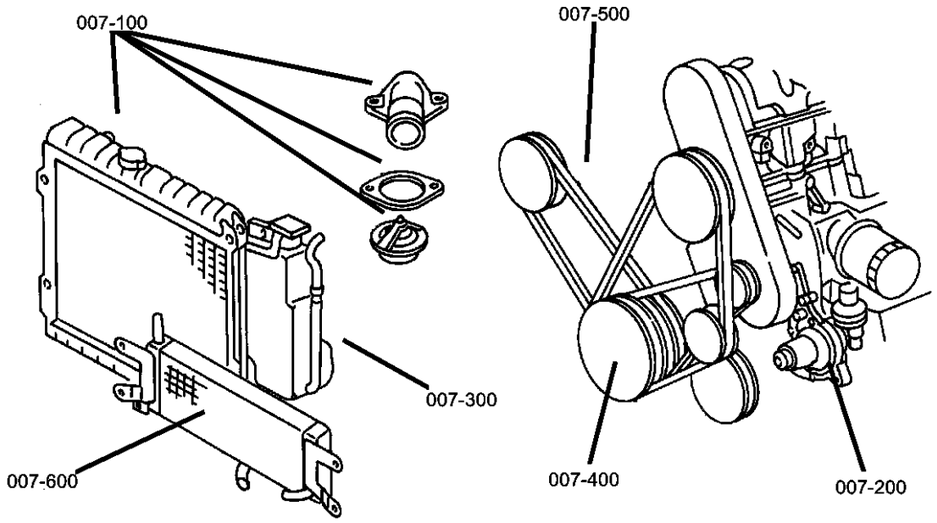

007-100 Radiator and Related Parts 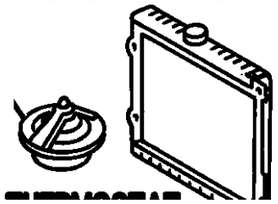	**007-200** Water Pump and Related Parts 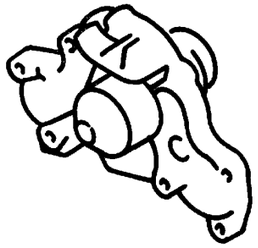	**007-300** Tank, Coolant Engine 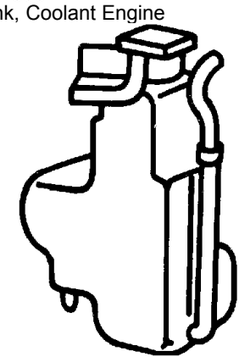	**007-400** Pulleys and Related Parts 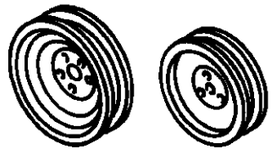
007-500 Drive Belts 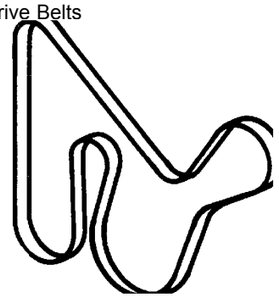	**007-600** Lines, Transmission Oil Cooler 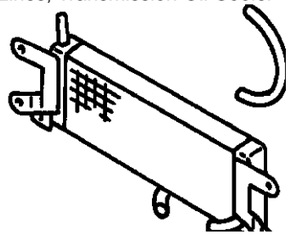	**007-700** Grilles 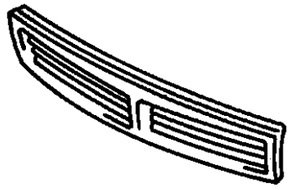	

Group - 7 Cooling

Illustration Title — Group-Fig. No.

Radiator and Related Parts
Radiator And Related Parts 2.5L Engine ..... Fig. 7 - 102
Radiator And Related Parts 3.9L Engine ..... Fig. 7 - 105
Radiator And Related Parts 4.7L Engine ..... Fig. 7 - 107
Radiator And Related Parts 5.9L Engine ..... Fig. 7 - 110
Radiator Closure And Air Deflector ..... Fig. 7 - 115

Water Pump and Related Parts
Water Pump And Related Parts 2.5L Engine ..... Fig. 7 - 205
Water Pump And Related Parts, 4.7L Engine ..... Fig. 7 - 207
Water Pump And Related Parts 3.9L, 5.9L Engine ..... Fig. 7 - 210

Tank, Coolant Engine
Coolant Tank ..... Fig. 7 - 305

Pulleys and Related Parts
Drive Pulleys 2.5L Engine ..... Fig. 7 - 405
Drive Pulleys, 4.7L Engine ..... Fig. 7 - 407
Drive Pulleys 3.9L, 5.9L Engine ..... Fig. 7 - 410

Drive Belts
Drive Belts 2.5L Engine ..... Fig. 7 - 507
Drive Belts 3.9L, 4.7L, 5.9L Engine ..... Fig. 7 - 510

Lines, Transmission Oil Cooler
Oil Cooler Lines ..... Fig. 7 - 605

Grilles
Grille And Related Parts ..... Fig. 7 - 705

Radiator And Related Parts 2.5L Engine
Figure 7-102

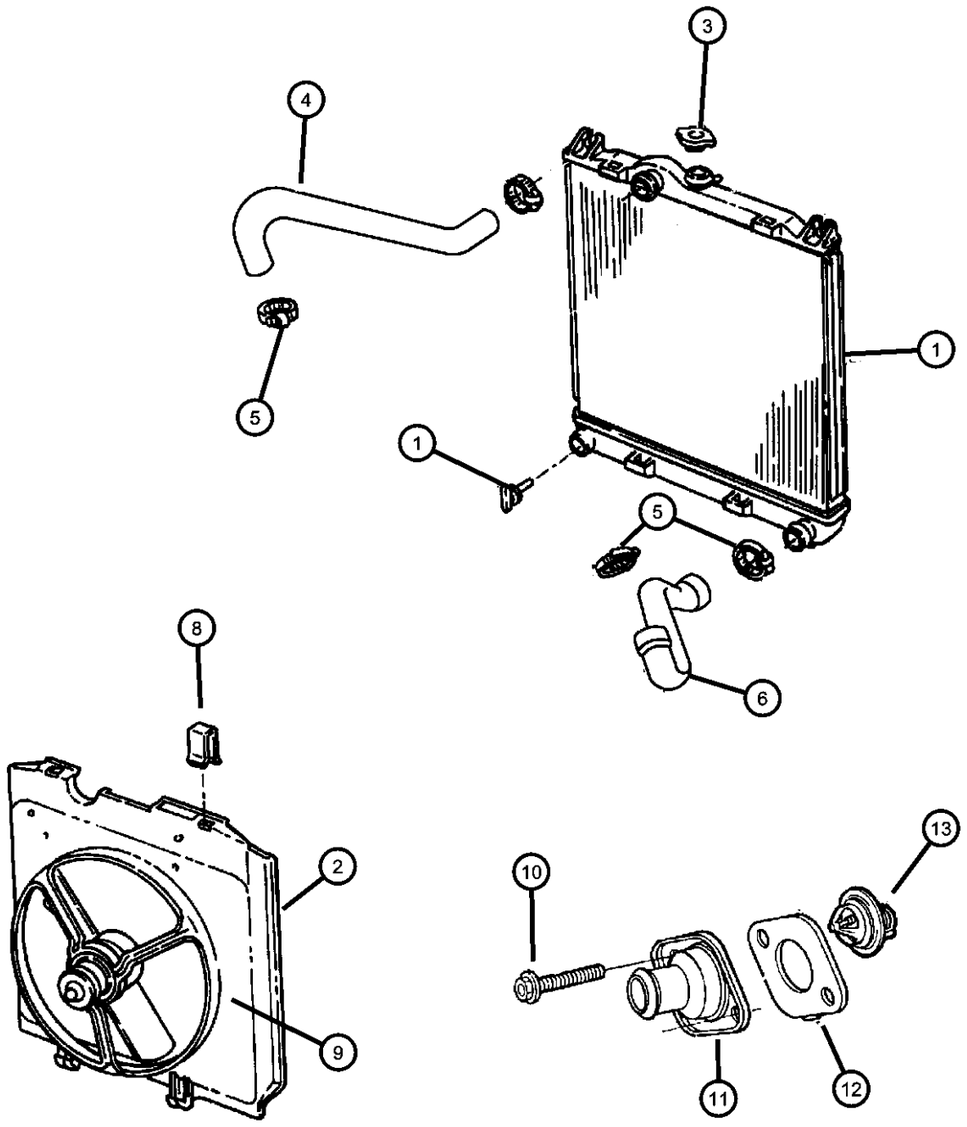

ITEM	PART NUMBER	QTY	LINE	SERIES	BODY	ENGINE	TRANS	TRIM	DESCRIPTION
Note: Sales Code EP0 = 2.5L Gas Engine									
1	52028917AA	1				EH0, EP0, EV0	DBB		RADIATOR, Engine Cooling
	05066386AA								Mopar Coolant 5 Year/100,000 Mile Formula 1 Gallon
2	05015423AA	1				EH0, EP0, EV0	DBB		ISOLATOR, Radiator
3	52028860AB	1				EP0			CAP, Radiator
4	52029191AC	1				EP0			HOSE, Radiator Inlet
5	52005580	1				EP0			CLAMP, Hose to Radiator
6	52029192AA	1				EP0			HOSE, Radiator Outlet
-7	52028854AA	1				EP0			BRACKET, Hose, Upper Support
8	04294036	1					DBB		CLIP
9	52030033AA	1				EH0, EP0, EV0	DBB		FAN MODULE, Radiator Cooling
10	06034927	1				EP0			SCREW AND WASHER, Hex Head, .312-18x.970
11	53006192	1				EP0			HOUSING, Thermostat
12	53020547AB	1				EP0			GASKET, Thermostat
13	52028186	1				EP0			THERMOSTAT, 195 Degrees
-14									DRAINCOCK, Radiator
	52028466	1				EH0, EM0, EV0	DG0		
		1				EH0, EP0, EV0	DBB		
-15	05073540AA	1							RELAY PACKAGE, Radiator Fan

DAKOTA (AN)

SERIES	LINE	BODY	ENGINE	TRANSMISSION
L = Quad Cab L = Regular Cab L = Club Cab	1 = Dakota 2WD 5 = Dakota 4WD	31 = CLUB CAB 2-DR 6.5 FT BOX 61 = REG CAB 6.5 FT BOX 84 = CREW CAB 4-DR W.B.1	EPO = 2.5L 4 Cyl. EHO = 3.9L 6 Cyl. EMO = 5.9L 8 Cyl. EVO = 4.7L Magnum EHC = 3.9L SMPI V6 EML = 5.9L V8 MPI Engine EPE = 2.5L POWER TECH I-4 Cyl. EVA = 4.7L V8 MPI	DDC = TRANSMISSION - 5-SPEED HD MANUAL DG4 = TRANSMISSION-MULTI-SPEED AUTO, 45RFE DGK = TRANSMISSION - 4-SPD. AUTOMATIC,42RE DGT = TRANSMISSION - 4-SPD. AUTOMATIC,46RE DGO = AUTO. TRANS.

Radiator And Related Parts 3.9L Engine
Figure 7-105

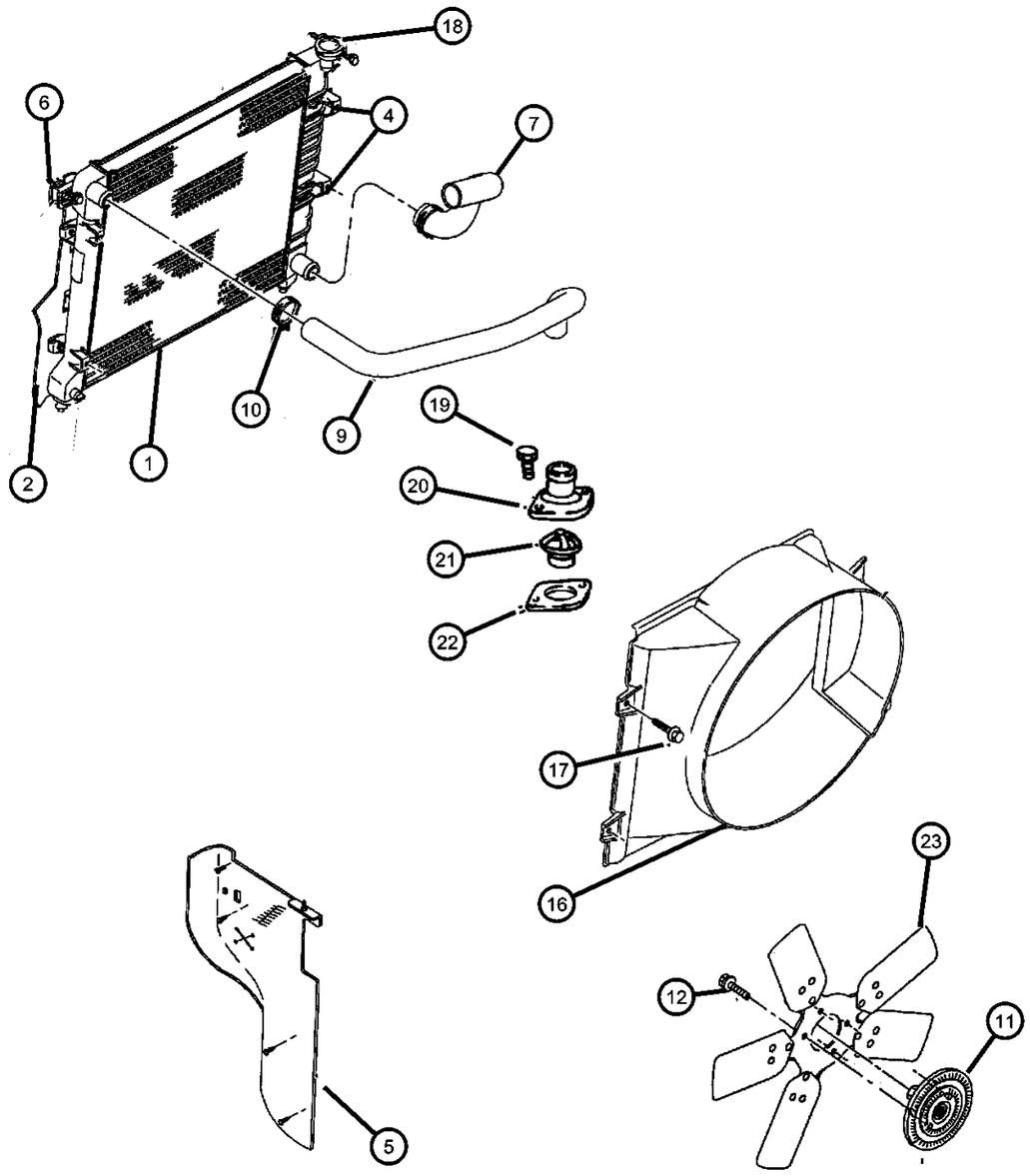

ITEM	PART NUMBER	QTY	LINE	SERIES	BODY	ENGINE	TRANS	TRIM	DESCRIPTION
Note: Sales Code EH0 = 3.9L Gas Engine									
Note: DG0 = Automatic Transmission, DBB = Manual Transmission.									
1									RADIATOR, Engine Cooling
	52028816AB	1				EH0, EM0, EV0	DG0		
	05066386AA								Mopar Coolant 5 Year/100,000 Mile Formula 1 Gallon
	52028917AA	1				EH0, EP0, EV0	DBB		
	05066386AA								Mopar Coolant 5 Year/100,000 Mile Formula 1 Gallon
2									ISOLATOR, Radiator
	05015421AA	1				EH0, EP0, EV0	DBB		Upper
		1				EH0	DG0		Upper
	05015422AA	1				EH0	DG0		Right, Lower
		1				EH0, EP0, EV0	DBB		Right, Lower
	05015423AA	1				EH0	DG0		Left, Lower
		1				EH0, EP0, EV0	DBB		Left, Lower
-3	52028779AA	1				EH0	DG0		COOLER, Auxiliary Oil
4									TUBE, Oil Cooler
	05015413AA	1				EH0	DG0		Inlet, lower
	05015414AA	1				EH0, EM0, EV0	DG0		Outlet, Top
	05015415AA	1				EH0	DG0		Lower, Aux. Cooler
	05015416AA	1				EH0	DG0		Upper, Aux. Cooler
5	05015416AA	1							SEAL, Rad Grille Supt To A/C, 52028631AAC, (NOT SERVICED),
6	06505030AA	2							SCREW
7	52029194AA	1				EH0			HOSE, Radiator Outlet
-8	52028855AB	1				EH0, EM0			BRACKET, Hose
9	52029193AB	1				EH0			HOSE, Radiator Inlet
10	52029193AB	1							CLAMP, (NOT SERVICED)
11	52028799AA	1				EH0, EM0, EV0			DRIVE, Fan
12	06022225	4				EH0, EM0, EV0			SCREW AND WASHER, Hex Head, .312-18x.75

DAKOTA (AN)

SERIES	LINE	BODY	ENGINE	TRANSMISSION
L = Quad Cab L = Regular Cab L = Club Cab	1 = Dakota 2WD 5 = Dakota 4WD	31 = CLUB CAB 2-DR 6.5 FT BOX 61 = REG CAB 6.5 FT BOX 84 = CREW CAB 4-DR W.B.1	EPO = 2.5L 4 Cyl. EHO = 3.9L 6 Cyl. EMO = 5.9L 8 Cyl. EVO = 4.7L Magnum EHC = 3.9L SMPI V6 EML = 5.9L V8 MPI Engine EPE = 2.5L POWER TECH I-4 Cyl. EVA = 4.7L V8 MPI	DDC = TRANSMISSION - 5-SPEED HD MANUAL DG4 = TRANSMISSION-MULTI-SPEED AUTO, 45RFE DGK = TRANSMISSION - 4-SPD. AUTOMATIC,42RE DGT = TRANSMISSION - 4-SPD. AUTOMATIC,46RE DGO = AUTO. TRANS.

AR = use ase required - = Non illustrrated part

Radiator And Related Parts 3.9L Engine
Figure 7-105

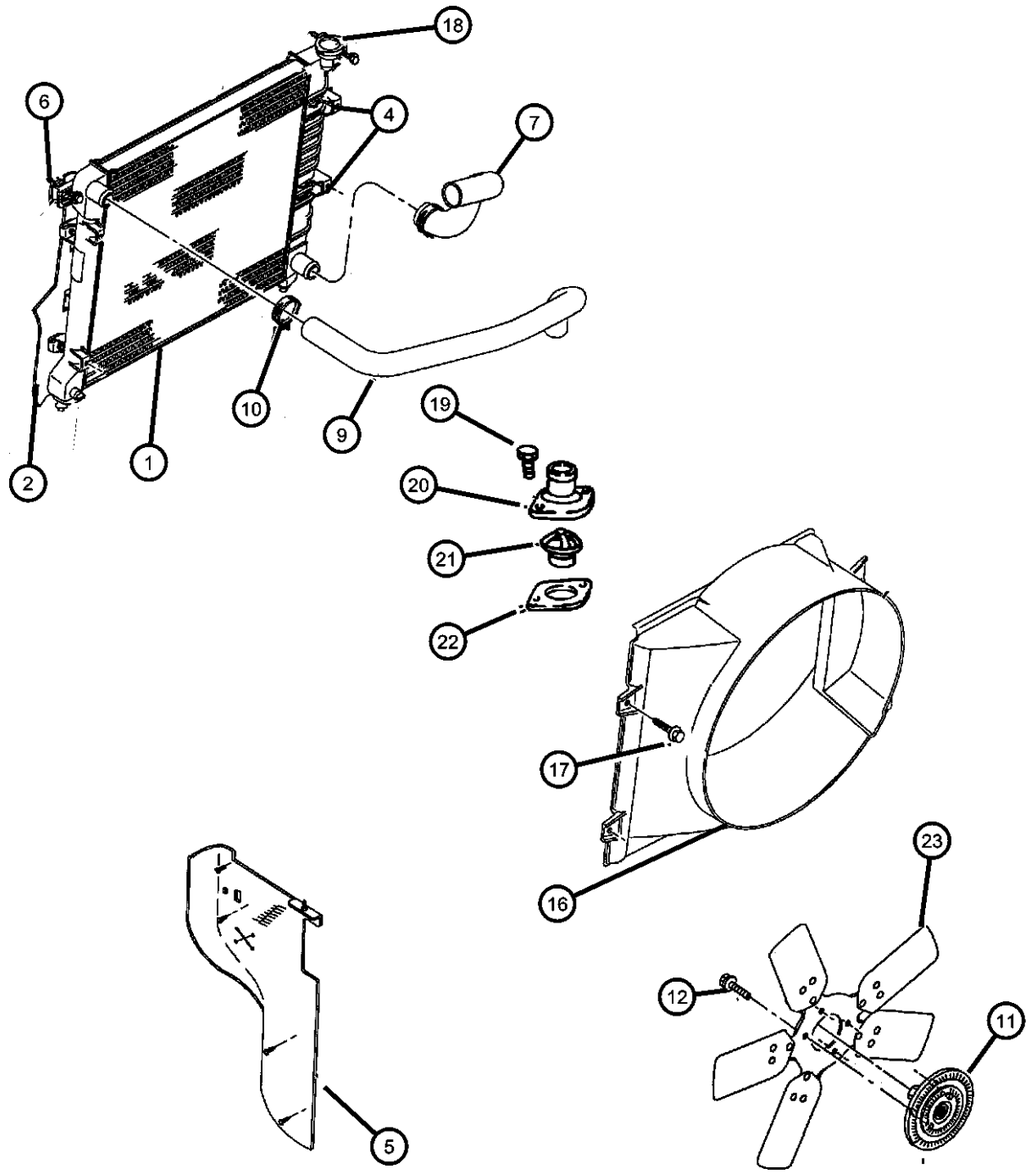

ITEM	PART NUMBER	QTY	LINE	SERIES	BODY	ENGINE	TRANS	TRIM	DESCRIPTION
-13	05015532AA	1				EH0			SHROUD MODULE, Fan, Upper
-14	52029181AC	1				EH0			SHROUD, Fan, Lower
-15	05015536AA	1				EH0			EXTENSION, Fan Shroud
16	52029181AB	1				EH0			SHROUD, Fan
17	06101718	2							SCREW AND WASHER, Oval Head, M6x1x25
18	52028860AB	1				EH0			CAP, Radiator
19	06034549	14				EH0			SCREW, Hex Head, .312-18x.94
20	53020115	1				EH0, EM0			HOUSING, Thermostat
21	52028185	1				EH0, EM0			THERMOSTAT, 195 Degrees
22	53021051	1				EH0, EM0			GASKET, Thermostat
23	52029263AA	1				EH0			FAN, Cooling
-24	52030033AB	1				EH0	DG0		FAN MODULE, Radiator Cooling

DAKOTA (AN)

SERIES	LINE	BODY	ENGINE	TRANSMISSION
L = Quad Cab L = Regular Cab L = Club Cab	1 = Dakota 2WD 5 = Dakota 4WD	31 = CLUB CAB 2-DR 6.5 FT BOX 61 = REG CAB 6.5 FT BOX 84 = CREW CAB 4-DR W.B.1	EPO = 2.5L 4 Cyl. EHO = 3.9L 6 Cyl. EMO = 5.9L 8 Cyl. EVO = 4.7L Magnum EHC = 3.9L SMPI V6 EML = 5.9L V8 MPI Engine EPE = 2.5L POWER TECH I-4 Cyl. EVA = 4.7L V8 MPI	DDC = TRANSMISSION - 5-SPEED HD MANUAL DG4 = TRANSMISSION-MULTI-SPEED AUTO, 45RFE DGK = TRANSMISSION - 4-SPD. AUTOMATIC,42RE DGT = TRANSMISSION - 4-SPD. AUTOMATIC,46RE DGO = AUTO. TRANS.

AR = use ase required - = Non illustrrated part

Radiator And Related Parts 4.7L Engine
Figure 7-107

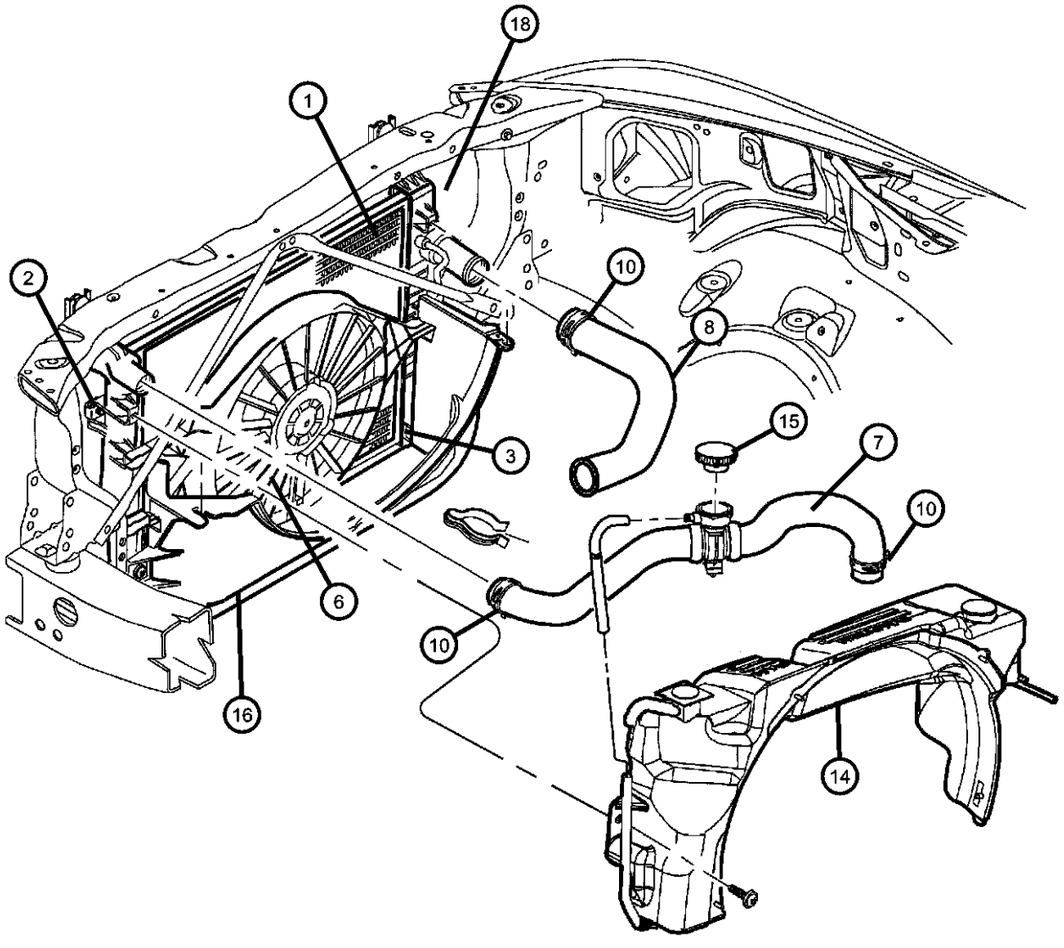

ITEM	PART NUMBER	QTY	LINE	SERIES	BODY	ENGINE	TRANS	TRIM	DESCRIPTION
1									RADIATOR, Engine Cooling
	52028816AB	1				EH0, EM0, EV0	DG0		without Max Cooling
	05066386AA								Mopar Coolant 5 Year/100,000 Mile Formula 1 Gallon
	52028818AA	1				EM0, EV0	DG0		with Max Cooling
	05066386AA								Mopar Coolant 5 Year/100,000 Mile Formula 1 Gallon
	52028917AA	1				EH0, EP0, EV0	DBB		
	05066386AA								Mopar Coolant 5 Year/100,000 Mile Formula 1 Gallon
2									ISOLATOR, Radiator
	05015421AA	1				EV0, EH0, EP0	DBB		Upper
		1				EH0, EM0, EV0	DG0		Upper
	05015422AA	1				EH0, EM0, EV0	DG0		Right, Lower
		1				EH0, EP0, EV0	DBB		Right, Lower
	05015423AA	1				EH0, EM0, EV0	DG0		Left, Lower
		1				EH0, EP0, EV0	DBB		Left, Lower
3									DRAINCOCK, Radiator
	52028466	1				EH0, EP0, EV0	DBB		
		1				EH0, EM0, EV0	DG0		
-4	52028779AA	1				EM0, EV0	DG0		COOLER, Auxiliary Oil
-5									TUBE, Oil Cooler
	05015413AA	1				EM0, EV0	DG0		With or Without Cooler [NMC], Inlet, Lower
	05015416AA	1				EM0, EV0	DG0		With Cooler [NMC], Outlet, Upper
	05015414AA	1				EH0, EM0, EV0	DG0		Without Cooler, Outlet, Upper
	05015415AA	1				EM0, EV0	DG0		From Cooler To Trans Tube, Outlet
6									FAN MODULE, Radiator Cooling
	52030033AA	1				EH0, EP0, EV0	DBB		

DAKOTA (AN)

SERIES	LINE	BODY	ENGINE	TRANSMISSION
L = Quad Cab	1 = Dakota 2WD	31 = CLUB CAB 2-DR 6.5 FT BOX	EPO = 2.5L 4 Cyl.	DDC = TRANSMISSION - 5-SPEED HD MANUAL
L = Regular Cab	5 = Dakota 4WD	61 = REG CAB 6.5 FT BOX	EHO = 3.9L 6 Cyl.	DG4 = TRANSMISSION-MULTI-SPEED AUTO, 45RFE
L = Club Cab		84 = CREW CAB 4-DR W.B.1	EMO = 5.9L 8 Cyl.	DGK = TRANSMISSION - 4-SPD. AUTOMATIC,42RE
			EVO = 4.7L Magnum	DGT = TRANSMISSION - 4-SPD. AUTOMATIC,46RE
			EHC = 3.9L SMPI V6	DGO = AUTO. TRANS.
			EML = 5.9L V8 MPI Engine	
			EPE = 2.5L POWER TECH I-4 Cyl.	
			EVA = 4.7L V8 MPI	

AR = use ase required - = Non illustrrated part

Radiator And Related Parts 4.7L Engine
Figure 7-107

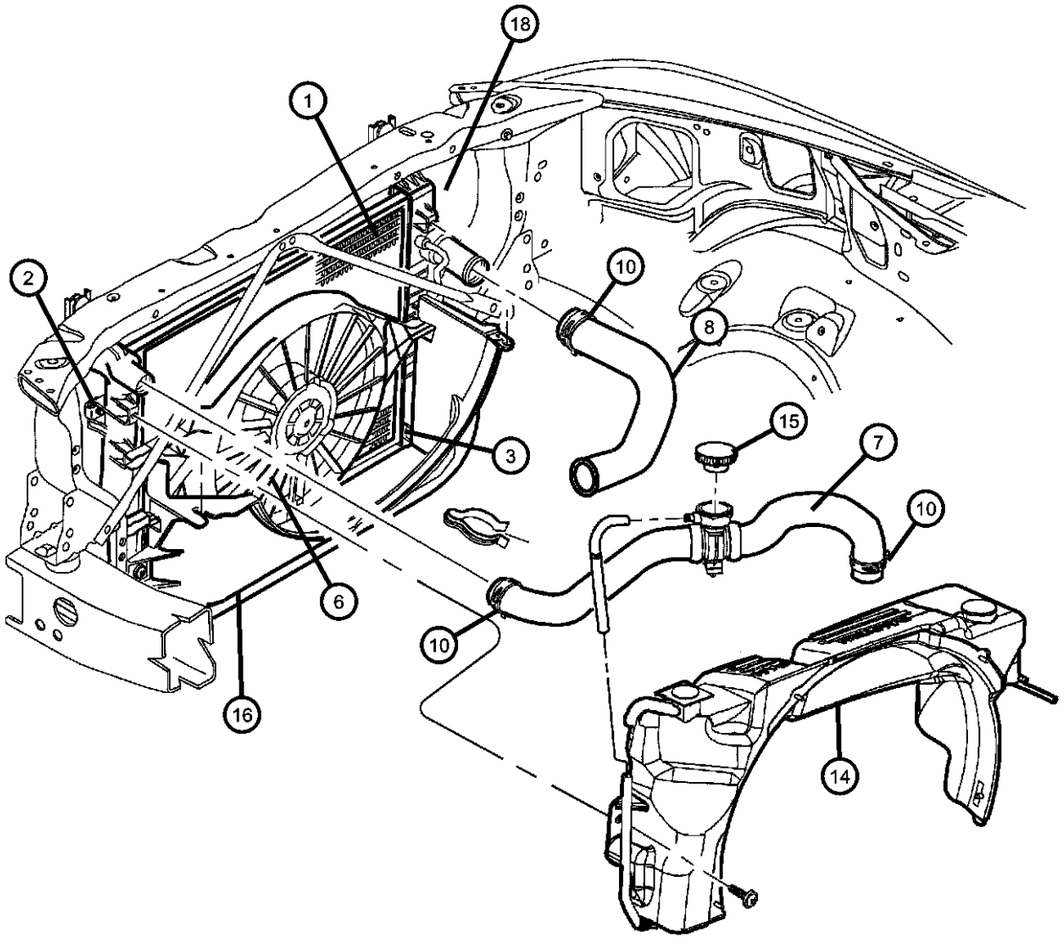

ITEM	PART NUMBER	QTY	LINE	SERIES	BODY	ENGINE	TRANS	TRIM	DESCRIPTION
		1				EH0, EM0, EV0	DG0		
7	52028810AC	1				EV0			HOSE, Radiator Inlet
8	52028813AB	1				EV0			HOSE, Radiator Outlet
-9	52028863AA	1				EH0, EM0, EP0			CLIP, Radiator Hose
10	32002366	1				EH0, EM0, EV0			CLAMP, Hose, 55mm Black
-11	52028916AB	1				EM0, EV0			FAN, Cooling
-12	52028799AA	1				EM0, EV0, EH0			DRIVE, Fan
-13	06022225	4				EH0, EM0, EV0			SCREW AND WASHER, Hex Head, .312-18x.75
14	05015534AA	1				EM0, EP0, EV0			SHROUD MODULE, FanUpper
15	52028860AB	1				EV0			CAP, Radiator
16	52029185AC	1				EM0, EP0, EV0			SHROUD, FanLower
-17	53030960	1				EV0			LABEL, Belt Routing
18	52028913AB	1							SEAL, Rad Grille Supt To A/C

DAKOTA (AN)

SERIES	LINE	BODY	ENGINE	TRANSMISSION
L = Quad Cab	1 = Dakota 2WD	31 = CLUB CAB 2-DR 6.5 FT BOX	EPO = 2.5L 4 Cyl.	DDC = TRANSMISSION - 5-SPEED HD MANUAL
L = Regular Cab	5 = Dakota 4WD	61 = REG CAB 6.5 FT BOX	EHO = 3.9L 6 Cyl.	DG4 = TRANSMISSION-MULTI-SPEED AUTO, 45RFE
L = Club Cab		84 = CREW CAB 4-DR W.B.1	EMO = 5.9L 8 Cyl.	DGK = TRANSMISSION - 4-SPD. AUTOMATIC,42RE
			EVO = 4.7L Magnum	DGT = TRANSMISSION - 4-SPD. AUTOMATIC,46RE
			EHC = 3.9L SMPI V6	DGO = AUTO. TRANS.
			EML = 5.9L V8 MPI Engine	
			EPE = 2.5L POWER TECH I-4 Cyl.	
			EVA = 4.7L V8 MPI	

Radiator And Related Parts 5.9L Engine
Figure 7-110

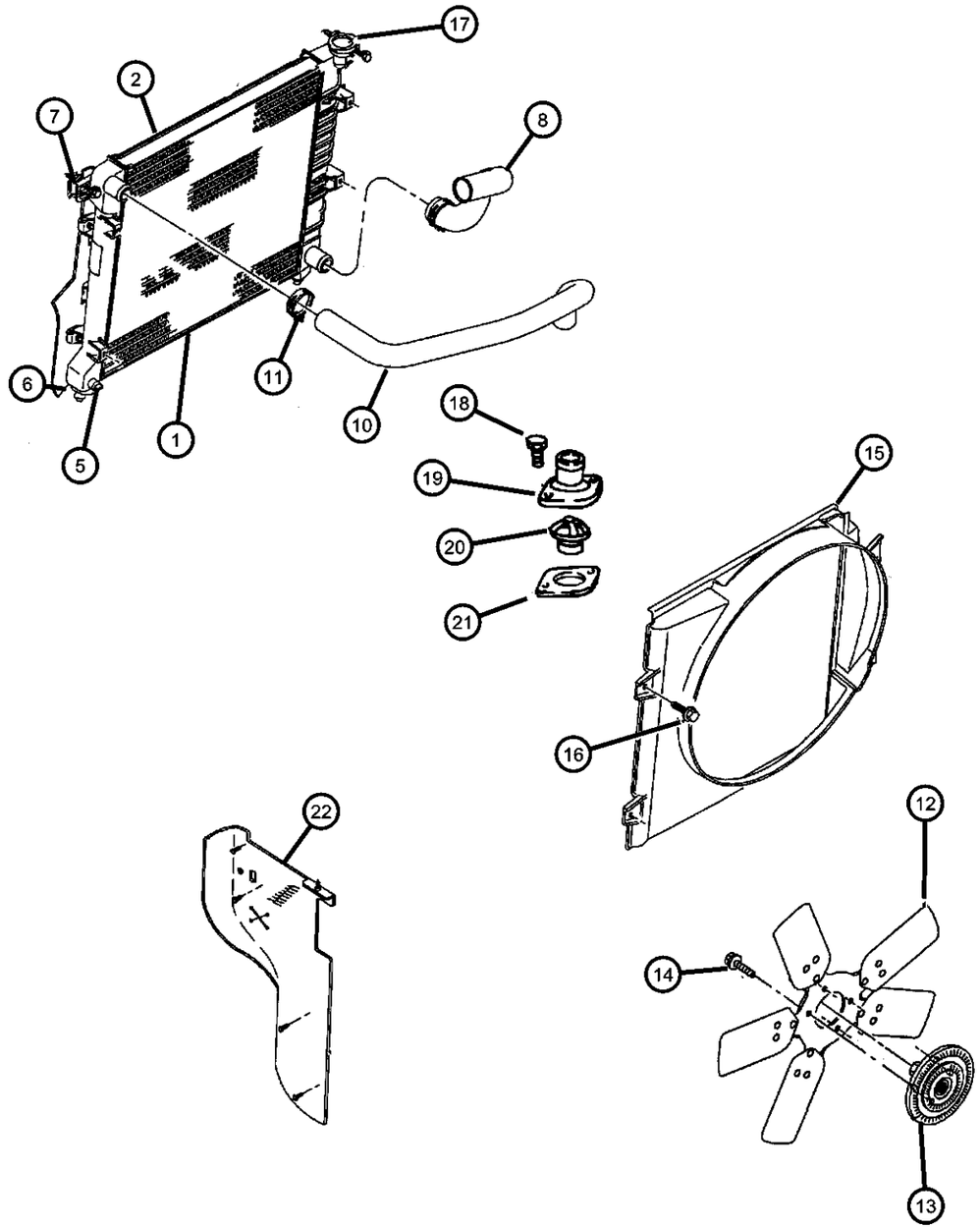

ITEM	PART NUMBER	QTY	LINE	SERIES	BODY	ENGINE	TRANS	TRIM	DESCRIPTION
Note: Sales Code EM0 = 5.9L Gas Engine									
1	52028818AA	1				EM0, EV0	DG0		RADIATOR, Engine Cooling
	05066386AA								Mopar Coolant 5 Year/100,000 Mile Formula 1 Gallon
2									ISOLATOR, Radiator
	05015421AA	2				EM0, EV0	DG0		Upper
	05015422AA	1				EM0, EV0	DG0		Right, Lower
	05015423AA	1				EM0, EV0	DG0		Left, Lower
-3	52028779AA	1				EM0, EV0	DG0		COOLER, Auxiliary Oil
-4									TUBE, Oil Cooler
	05015413AA	1				EM0, EV0	DG0		Inlet, Lower
	05015414AA	1				EH0, EM0, EV0	DG0		Outlet, Tube
	05015415AA	1				EM0, EV0	DG0		Lower, Aux. Cooler
	05015416AA	1				EM0, EV0	DG0		Upper, Aux. Cooler
5									DRAINCOCK, Radiator
	52028466	1				EH0, EL0	DBB		
		1				EH0, EL0	DG0		
6	52027827	2				EM0	DG0		ISOLATOR, Radiator
7	06505030AA	2							SCREW
8	52029196AB	1				EM0			HOSE, Radiator Outlet
-9	52028855AB	1				EH0, EM0			BRACKET, Hose
10	52029195AA	1				EM0			HOSE, Radiator Inlet
11	52029195AA	1							CLAMP, (NOT SERVICED)
12	52028916AA	1				EM0, EV0			FAN, Cooling
13	52028799AA	1				EH0, EM0, EV0			DRIVE, Fan
14	06022225	4				EH0, EM0, EV0			SCREW AND WASHER, Hex Head, .312-18x.75
15	52029185AB	1				EM0, EP0, EV0			SHROUD, Fan
16	06101718	2							SCREW AND WASHER, Oval Head, M6x1x25
17	52028860AB	1				EM0			CAP, Radiator
18	06034549	18				EM0			SCREW, Hex Head, .312-18x.94

DAKOTA (AN)

SERIES	LINE	BODY	ENGINE	TRANSMISSION
L = Quad Cab L = Regular Cab L = Club Cab	1 = Dakota 2WD 5 = Dakota 4WD	31 = CLUB CAB 2-DR 6.5 FT BOX 61 = REG CAB 6.5 FT BOX 84 = CREW CAB 4-DR W.B.1	EPO = 2.5L 4 Cyl. EHO = 3.9L 6 Cyl. EMO = 5.9L 8 Cyl. EVO = 4.7L Magnum EHC = 3.9L SMPI V6 EML = 5.9L V8 MPI Engine EPE = 2.5L POWER TECH I-4 Cyl. EVA = 4.7L V8 MPI	DDC = TRANSMISSION - 5-SPEED HD MANUAL DG4 = TRANSMISSION-MULTI-SPEED AUTO, 45RFE DGK = TRANSMISSION - 4-SPD. AUTOMATIC,42RE DGT = TRANSMISSION - 4-SPD. AUTOMATIC,46RE DGO = AUTO. TRANS.

Radiator And Related Parts 5.9L Engine
Figure 7-110

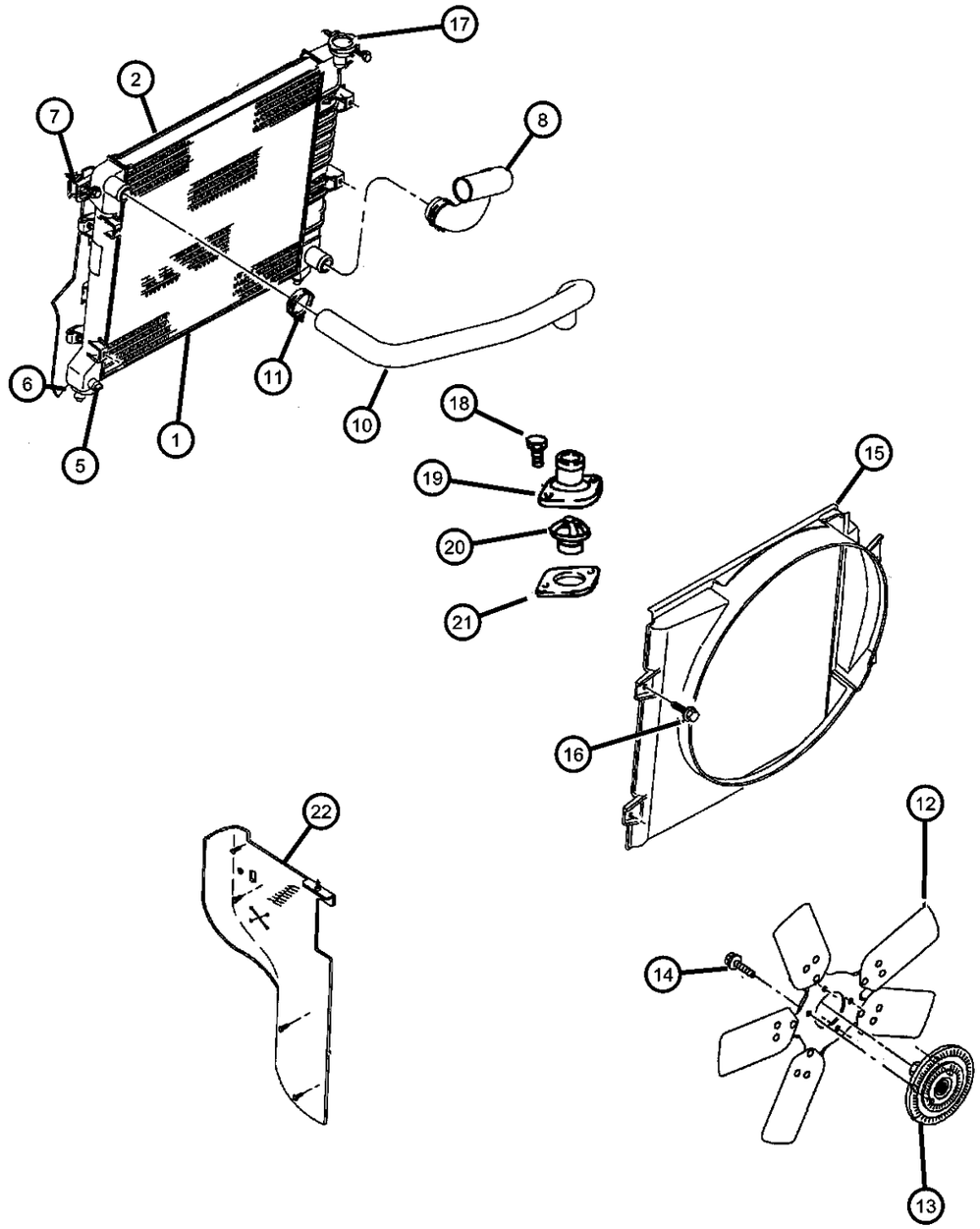

ITEM	PART NUMBER	QTY	LINE	SERIES	BODY	ENGINE	TRANS	TRIM	DESCRIPTION
19	53020115	1				EH0, EM0			HOUSING, Thermostat
20	52028185	1				EH0, EM0			THERMOSTAT, 195 Degrees
21	53021051	1				EH0, EM0			GASKET, Thermostat
22	53021051	1							PANEL, Radiator, (NOT REQUIRED)
-23	52030033AB	1				EM0, EV0	DG0		FAN MODULE, Radiator Cooling

DAKOTA (AN)

SERIES	LINE	BODY	ENGINE	TRANSMISSION
L = Quad Cab L = Regular Cab L = Club Cab	1 = Dakota 2WD 5 = Dakota 4WD	31 = CLUB CAB 2-DR 6.5 FT BOX 61 = REG CAB 6.5 FT BOX 84 = CREW CAB 4-DR W.B.1	EPO = 2.5L 4 Cyl. EHO = 3.9L 6 Cyl. EMO = 5.9L 8 Cyl. EVO = 4.7L Magnum EHC = 3.9L SMPI V6 EML = 5.9L V8 MPI Engine EPE = 2.5L POWER TECH I-4 Cyl. EVA = 4.7L V8 MPI	DDC = TRANSMISSION - 5-SPEED HD MANUAL DG4 = TRANSMISSION-MULTI-SPEED AUTO, 45RFE DGK = TRANSMISSION - 4-SPD. AUTOMATIC,42RE DGT = TRANSMISSION - 4-SPD. AUTOMATIC,46RE DGO = AUTO. TRANS.

Radiator Closure And Air Deflector
Figure 7-115

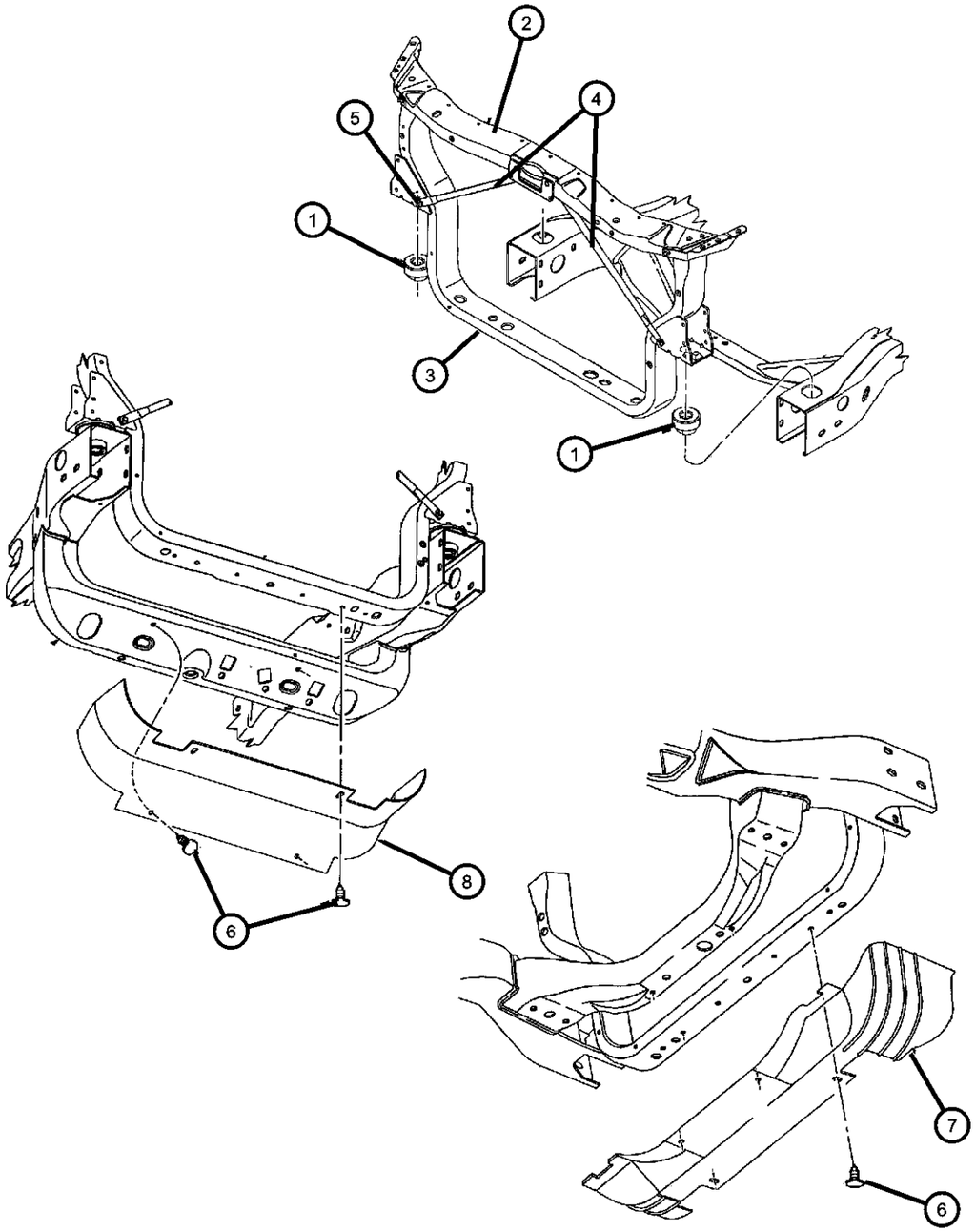

ITEM	PART NUMBER	QTY	LINE	SERIES	BODY	ENGINE	TRANS	TRIM	DESCRIPTION
1	55255703	2							ISOLATORLower
2	55255721AB	1							CLOSURE, RadiatorUpper
3	55255720AC	1							CLOSURE, RadiatorLower
4	55257304AA	1							BRACE, Radiator Closure Panel
5	06101787	9							SCREW, Tapping, M8x20
6	06503221	4							PIN
7	55036568AB	1	1						DEFLECTOR, Radiator
8									DEFLECTOR, Radiator
	55036568AB	1	1						
	55056075AA	1	5						
-9	04716585	1	5						DOOR, Fender Side Shield, Bulb Access
-10									COOLER, Auxiliary Oil
	52028779AA	1				EM0, EV0	DG0		
		1				EH0	DG0		
-11	06501557	6							BOLT, Hex Flange Head, M12x1.75x95.50

DAKOTA (AN)

SERIES	LINE	BODY	ENGINE	TRANSMISSION
L = Quad Cab	1 = Dakota 2WD	31 = CLUB CAB 2-DR 6.5 FT BOX	EPO = 2.5L 4 Cyl.	DDC = TRANSMISSION - 5-SPEED HD MANUAL
L = Regular Cab	5 = Dakota 4WD	61 = REG CAB 6.5 FT BOX	EHO = 3.9L 6 Cyl.	DG4 = TRANSMISSION-MULTI-SPEED AUTO, 45RFE
L = Club Cab		84 = CREW CAB 4-DR W.B.1	EMO = 5.9L 8 Cyl.	DGK = TRANSMISSION - 4-SPD. AUTOMATIC,42RE
			EVO = 4.7L Magnum	DGT = TRANSMISSION - 4-SPD. AUTOMATIC,46RE
			EHC = 3.9L SMPI V6	DGO = AUTO. TRANS.
			EML = 5.9L V8 MPI Engine	
			EPE = 2.5L POWER TECH I-4 Cyl.	
			EVA = 4.7L V8 MPI	

AR = use ase required - = Non illustrrated part

<< RETURN TO GROUP INDEX

Water Pump And Related Parts 2.5L Engine
Figure 7-205

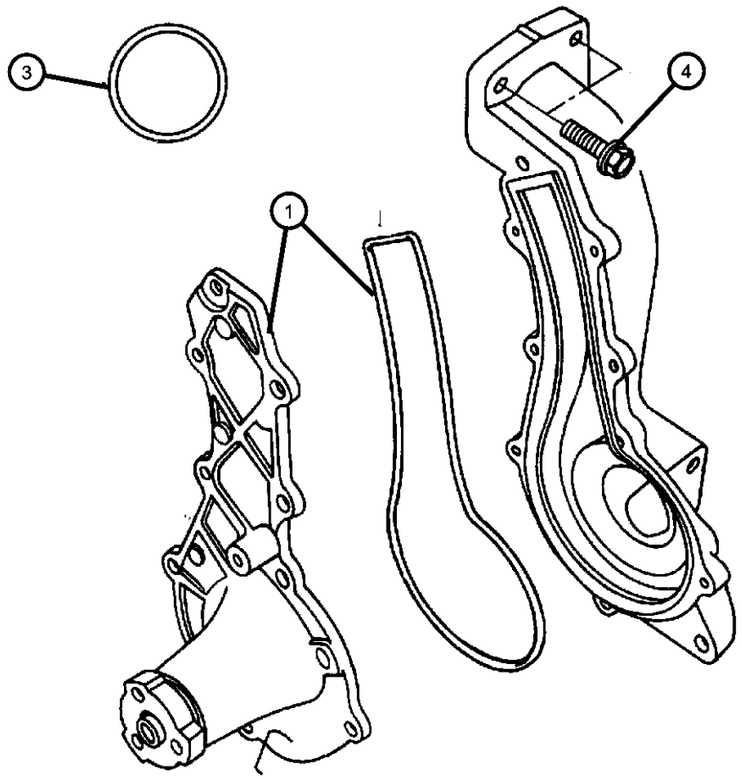

ITEM	PART NUMBER	QTY	LINE	SERIES	BODY	ENGINE	TRANS	TRIM	DESCRIPTION
Note: Sales Code EP0 = 2.5L Gas Engine									
1	04626054AD	1				EP0			PUMP PACKAGE, Water
-2	53007978	1				EP0			TUBE, Water Pump Heater Return
3	53010419	1				EP0			GASKET, Water Pump
4	53010419	1							SCREW AND WASHER, Hex Head, .312-18x1.12, (NOT SERVICED)
-5	53010419	1							SCREW AND WASHER, Hex Head, .312-18x1.75, (NOT SERVICED)

DAKOTA (AN)

SERIES	LINE	BODY	ENGINE	TRANSMISSION
L = Quad Cab	1 = Dakota 2WD	31 = CLUB CAB 2-DR 6.5 FT BOX	EPO = 2.5L 4 Cyl.	DDC = TRANSMISSION - 5-SPEED HD MANUAL
L = Regular Cab	5 = Dakota 4WD	61 = REG CAB 6.5 FT BOX	EHO = 3.9L 6 Cyl.	DG4 = TRANSMISSION-MULTI-SPEED AUTO, 45RFE
L = Club Cab		84 = CREW CAB 4-DR W.B.1	EMO = 5.9L 8 Cyl.	DGK = TRANSMISSION - 4-SPD. AUTOMATIC,42RE
			EVO = 4.7L Magnum	DGT = TRANSMISSION - 4-SPD. AUTOMATIC,46RE
			EHC = 3.9L SMPI V6	DGO = AUTO. TRANS.
			EML = 5.9L V8 MPI Engine	
			EPE = 2.5L POWER TECH I-4 Cyl.	
			EVA = 4.7L V8 MPI	

Water Pump And Related Parts, 4.7L Engine
Figure 7-207

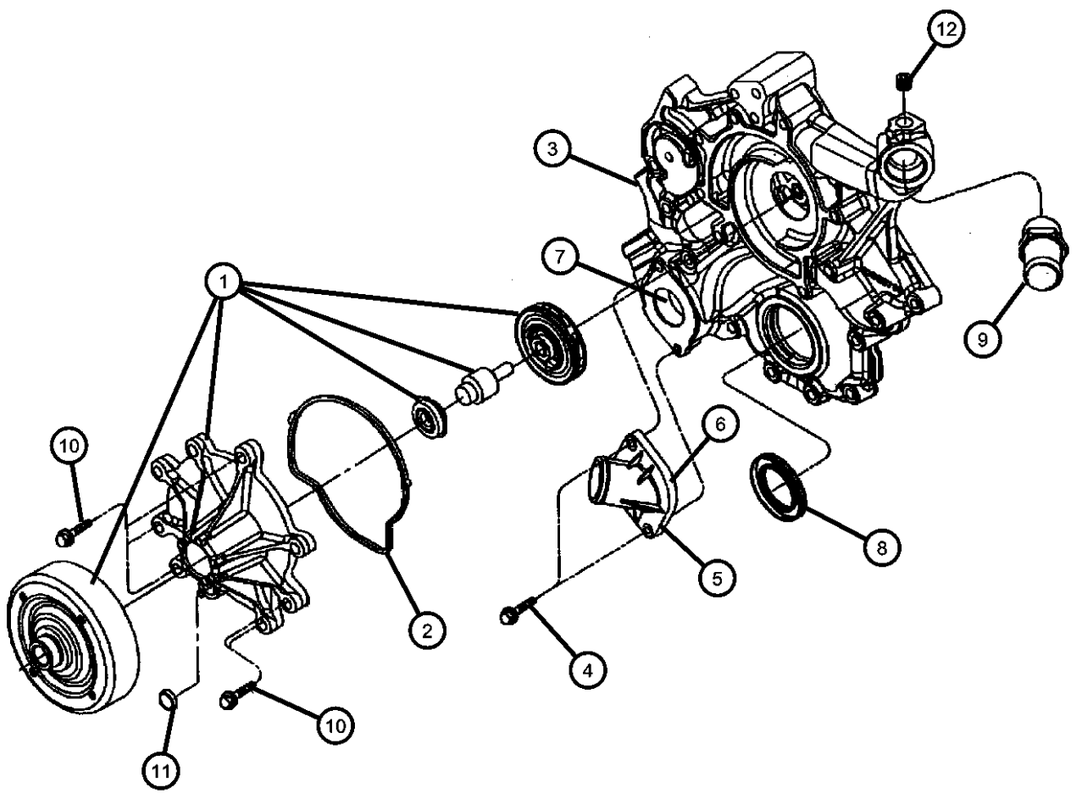

ITEM	PART NUMBER	QTY	LINE	SERIES	BODY	ENGINE	TRANS	TRIM	DESCRIPTION
1	53020873AB	1				EV0			PUMP, Water
2	53020865	1				EV0			GASKET, Water Pump
3	06035854	2				EV0			FITTING, Y-Style
4	06505502AA	2				EV0			SCREW
5	53020887AB	1				EV0			HOUSING, Thermostat
6	53020887AB	1							GASKET, Thermostat, (NOT SERVICED)
7	52079476AB	1				EV0			THERMOSTAT
8	53020790	1				EV0			SEAL, Crankshaft Oil, Front
9	06035961AA	1				EV0			PIPE FITTING, Chain Case Cover, .375-18x2
10	06035961AA	1							SCREW, M6x1x25, (NOT SERVICED)
11	06035961AA	1							PLUG, (NOT SERVICED)
12	06035961AA	1							PLUG, (NOT SERVICED)

DAKOTA (AN)

SERIES	LINE	BODY	ENGINE	TRANSMISSION
L = Quad Cab L = Regular Cab L = Club Cab	1 = Dakota 2WD 5 = Dakota 4WD	31 = CLUB CAB 2-DR 6.5 FT BOX 61 = REG CAB 6.5 FT BOX 84 = CREW CAB 4-DR W.B.1	EPO = 2.5L 4 Cyl. EHO = 3.9L 6 Cyl. EMO = 5.9L 8 Cyl. EVO = 4.7L Magnum EHC = 3.9L SMPI V6 EML = 5.9L V8 MPI Engine EPE = 2.5L POWER TECH I-4 Cyl. EVA = 4.7L V8 MPI	DDC = TRANSMISSION - 5-SPEED HD MANUAL DG4 = TRANSMISSION-MULTI-SPEED AUTO, 45RFE DGK = TRANSMISSION - 4-SPD. AUTOMATIC,42RE DGT = TRANSMISSION - 4-SPD. AUTOMATIC,46RE DGO = AUTO. TRANS.

AR = use ase required - = Non illustrrated part

Water Pump And Related Parts 3.9L, 5.9L Engine
Figure 7-210

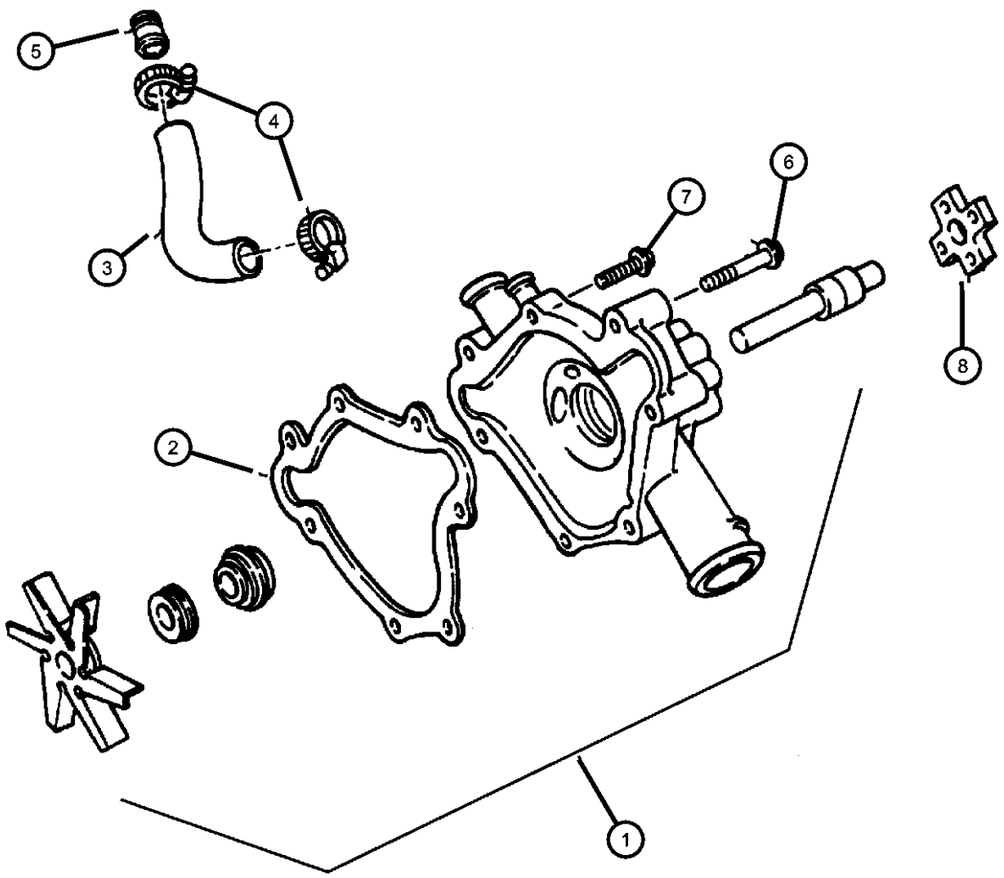

ITEM	PART NUMBER	QTY	LINE	SERIES	BODY	ENGINE	TRANS	TRIM	DESCRIPTION
Note: Sales Code EH0 = 3.9L Gas Engine									
Note: Sales Code EM0 = 5.9L Gas Engine Parts With separate call out not service in package									
1									PUMP, Water
	53021018AB	1				EM0			
	53021018AC	1				EH0			
2	04483757	1				EH0, EM0			GASKET, Water Pump
3	53008654	1				EH0, EM0			HOSE, Water Pump Bypass
4	04401436	2				EH0, EM0			CLAMP, Radiator
5	53020185	1				EM0			NIPPLE, By-Pass
6	06034279	2				EH0, EM0			SCREW AND WASHER, Hex Head Lock, .375-16x1.75
7	06034076	4				EH0, EM0			SCREW AND WASHER, Hex Head Lock, .375-16x4.45
8	06034076	4							HUB, Water Pump Pulley, Serviced w/Pump, (NOT SERVICED)
-9	55036160	1				EH0, EM0			TUBE, Water Pump Inlet
-10	04740906	1				EH0, EM0			O RING, Tube Assy, Heater Return

DAKOTA (AN)

SERIES	LINE	BODY	ENGINE	TRANSMISSION
L = Quad Cab L = Regular Cab L = Club Cab	1 = Dakota 2WD 5 = Dakota 4WD	31 = CLUB CAB 2-DR 6.5 FT BOX 61 = REG CAB 6.5 FT BOX 84 = CREW CAB 4-DR W.B.1	EPO = 2.5L 4 Cyl. EHO = 3.9L 6 Cyl. EMO = 5.9L 8 Cyl. EVO = 4.7L Magnum EHC = 3.9L SMPI V6 EML = 5.9L V8 MPI Engine EPE = 2.5L POWER TECH I-4 Cyl. EVA = 4.7L V8 MPI	DDC = TRANSMISSION - 5-SPEED HD MANUAL DG4 = TRANSMISSION-MULTI-SPEED AUTO, 45RFE DGK = TRANSMISSION - 4-SPD. AUTOMATIC,42RE DGT = TRANSMISSION - 4-SPD. AUTOMATIC,46RE DGO = AUTO. TRANS.

Coolant Tank
Figure 7-305

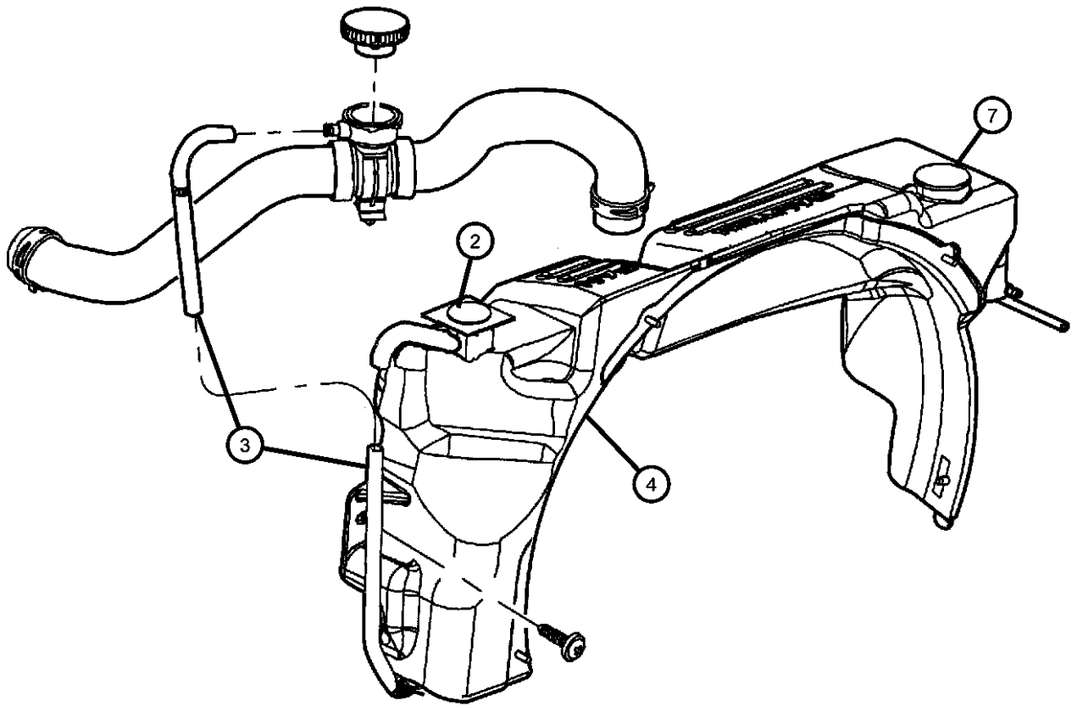

ITEM	PART NUMBER	QTY	LINE	SERIES	BODY	ENGINE	TRANS	TRIM	DESCRIPTION
Note: Sales Code EP0 = 2.5L Gas Engine									
Note: Sales Code EH0 = 3.9L Gas Engine									
Note: Sales Code EV0 = 4.7L Gas Engine									
Note: Sales Code EM0 = 5.9L Gas Engine									
-1									INDICATOR
	52028604	1				EM0, EP0, EV0			
		1				EH0			
2									CAP, Coolant Reserve Tank
	04682828	1				EH0			
		1				EM0, EP0, EV0			
3									HOSE, Overflow, Roll Stock
	04266423	1				EH0			
		1				EM0, EP0, EV0			
4									SHROUD MODULE, Fan
	05015532AA	1				EH0			
	05015534AA	1				EM0, EP0, EV0			
-5									GROMMET, Washer Reservoir
	05013755AA	1				EH0			
		1				EM0, EP0, EV0			
-6									GROMMET, Windshield Washer Pump
	05011809AA	1				EH0			
		1				EM0, EP0, EV0			
7									CAP, Washer Reservoir
	55077261AA	1				EH0			
		1				EM0, EP0, EV0			
-8									SENSOR, Washer Fluid Level
	04882797	1				EH0			
		1				EM0, EP0, EV0			
-9									PUMP, Washer, Windshield

DAKOTA (AN)

SERIES	LINE	BODY	ENGINE	TRANSMISSION
L = Quad Cab L = Regular Cab L = Club Cab	1 = Dakota 2WD 5 = Dakota 4WD	31 = CLUB CAB 2-DR 6.5 FT BOX 61 = REG CAB 6.5 FT BOX 84 = CREW CAB 4-DR W.B.1	EPO = 2.5L 4 Cyl. EHO = 3.9L 6 Cyl. EMO = 5.9L 8 Cyl. EVO = 4.7L Magnum EHC = 3.9L SMPI V6 EML = 5.9L V8 MPI Engine EPE = 2.5L POWER TECH I-4 Cyl. EVA = 4.7L V8 MPI	DDC = TRANSMISSION - 5-SPEED HD MANUAL DG4 = TRANSMISSION-MULTI-SPEED AUTO, 45RFE DGK = TRANSMISSION - 4-SPD. AUTOMATIC,42RE DGT = TRANSMISSION - 4-SPD. AUTOMATIC,46RE DGO = AUTO. TRANS.

Coolant Tank
Figure 7-305

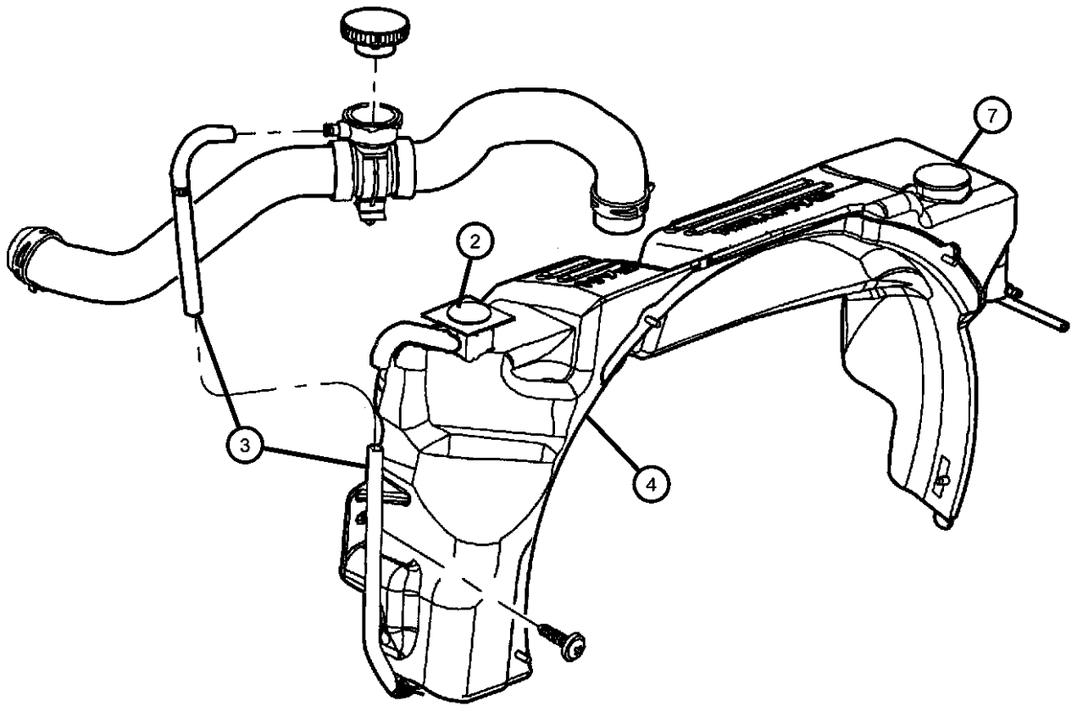

ITEM	PART NUMBER	QTY	LINE	SERIES	BODY	ENGINE	TRANS	TRIM	DESCRIPTION
	55077301AA	1				EH0			
		1				EM0, EP0, EV0			

DAKOTA (AN)

SERIES	LINE	BODY	ENGINE	TRANSMISSION
L = Quad Cab L = Regular Cab L = Club Cab	1 = Dakota 2WD 5 = Dakota 4WD	31 = CLUB CAB 2-DR 6.5 FT BOX 61 = REG CAB 6.5 FT BOX 84 = CREW CAB 4-DR W.B.1	EPO = 2.5L 4 Cyl. EHO = 3.9L 6 Cyl. EMO = 5.9L 8 Cyl. EVO = 4.7L Magnum EHC = 3.9L SMPI V6 EML = 5.9L V8 MPI Engine EPE = 2.5L POWER TECH I-4 Cyl. EVA = 4.7L V8 MPI	DDC = TRANSMISSION - 5-SPEED HD MANUAL DG4 = TRANSMISSION-MULTI-SPEED AUTO, 45RFE DGK = TRANSMISSION - 4-SPD. AUTOMATIC,42RE DGT = TRANSMISSION - 4-SPD. AUTOMATIC,46RE DGO = AUTO. TRANS.

Drive Pulleys 2.5L Engine
Figure 7-405

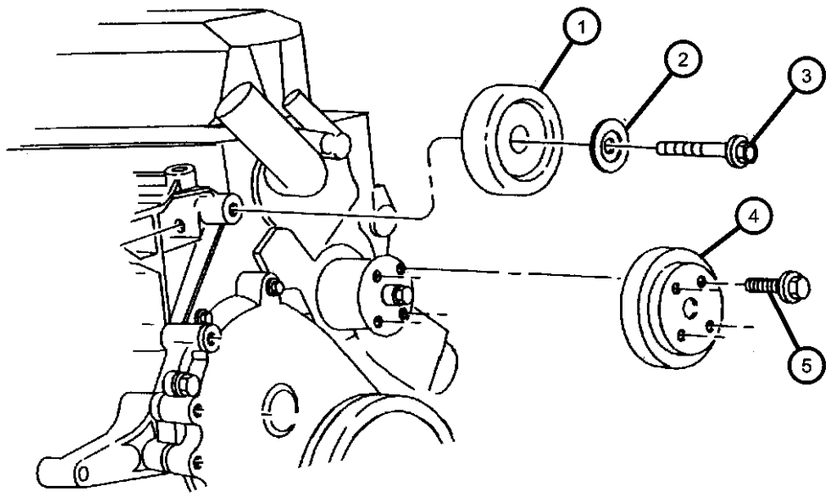

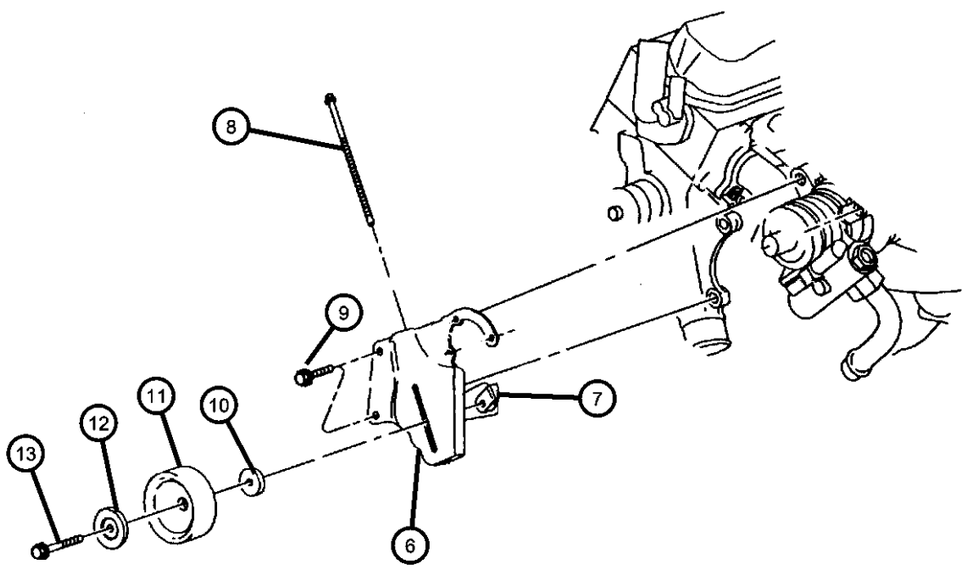

ITEM	PART NUMBER	QTY	LINE	SERIES	BODY	ENGINE	TRANS	TRIM	DESCRIPTION
Note: Sales Code EP0 = 2.5L Gas Engine									
1	53010230	1				EP0			PULLEY, Idler
2	33002201	1				EP0			BUSHING, Idler Pulley
3	06504239	1				EP0			SCREW AND WASHER, M10x1.5x40
4	53007154	1				EP0			PULLEY, Water Pump
5	06035377	4				EP0			SCREW AND WASHER, Hex Head, .312-24x.687
6	53010148	1				EP0			BRACKET, Tensioner
7	53010149	1				EP0			COLLAR, Tensioner Adjustment
8	06503198	1				EP0			BOLT
9	06505030AA	2							SCREW
10	06503230	1				EP0			SPACER, Belt Tensioner
11	04792112	1				EP0			PULLEY, Idler
12	33002201	1				EP0			BUSHING, Idler Pulley
13	34202029	1				EP0			BOLT, Hex Flange Head, M10x1.50x50

DAKOTA (AN)

SERIES	LINE	BODY	ENGINE	TRANSMISSION
L = Quad Cab L = Regular Cab L = Club Cab	1 = Dakota 2WD 5 = Dakota 4WD	31 = CLUB CAB 2-DR 6.5 FT BOX 61 = REG CAB 6.5 FT BOX 84 = CREW CAB 4-DR W.B.1	EPO = 2.5L 4 Cyl. EHO = 3.9L 6 Cyl. EMO = 5.9L 8 Cyl. EVO = 4.7L Magnum EHC = 3.9L SMPI V6 EML = 5.9L V8 MPI Engine EPE = 2.5L POWER TECH I-4 Cyl. EVA = 4.7L V8 MPI	DDC = TRANSMISSION - 5-SPEED HD MANUAL DG4 = TRANSMISSION-MULTI-SPEED AUTO, 45RFE DGK = TRANSMISSION - 4-SPD. AUTOMATIC,42RE DGT = TRANSMISSION - 4-SPD. AUTOMATIC,46RE DGO = AUTO. TRANS.

Drive Pulleys, 4.7L Engine
Figure 7-407

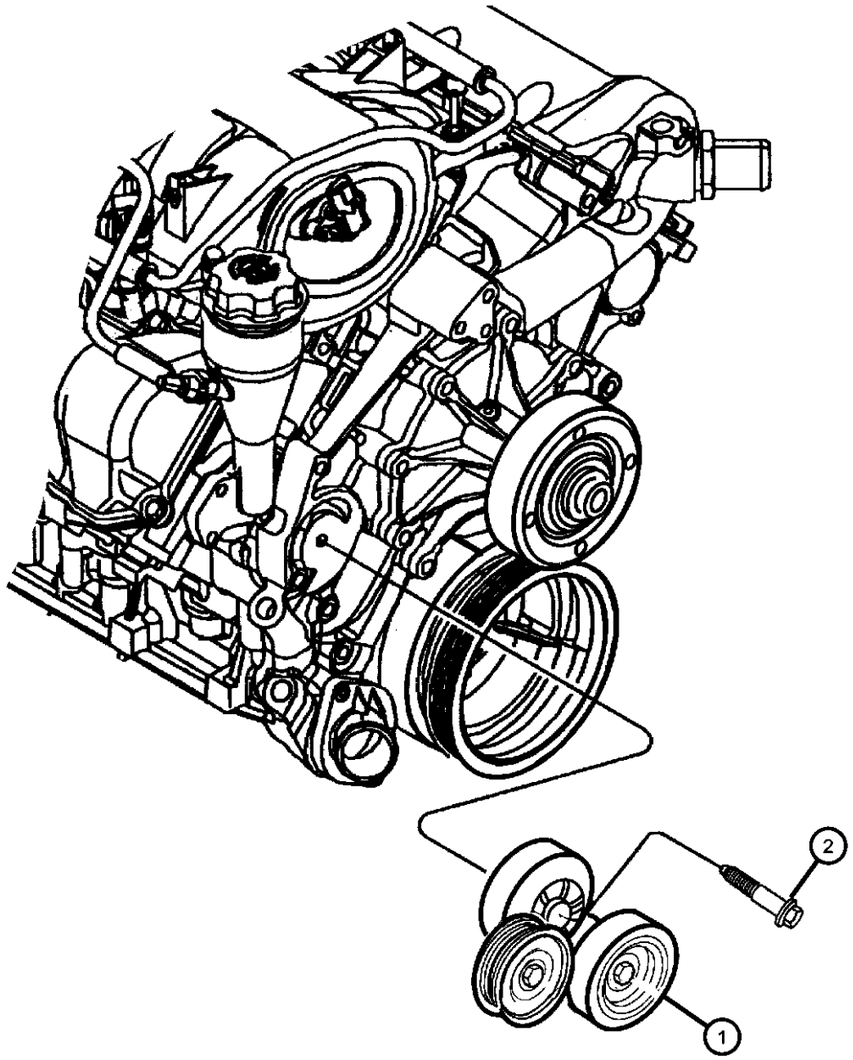

ITEM	PART NUMBER	QTY	LINE	SERIES	BODY	ENGINE	TRANS	TRIM	DESCRIPTION
1	53030958	1				EV0			TENSIONER, Alternator Belt
2	06504930AA	1				EV0			SCREW AND WASHER, Hex Head, M10x1.5x70
-3	53031045	1				EV0			PULLEY, Idler, Without Air Conditioning
-4	53030959	1				EV0			BRACKET, Idler Pulley, Without Air Conditioning

DAKOTA (AN)

SERIES	LINE	BODY	ENGINE	TRANSMISSION
L = Quad Cab L = Regular Cab L = Club Cab	1 = Dakota 2WD 5 = Dakota 4WD	31 = CLUB CAB 2-DR 6.5 FT BOX 61 = REG CAB 6.5 FT BOX 84 = CREW CAB 4-DR W.B.1	EPO = 2.5L 4 Cyl. EHO = 3.9L 6 Cyl. EMO = 5.9L 8 Cyl. EVO = 4.7L Magnum EHC = 3.9L SMPI V6 EML = 5.9L V8 MPI Engine EPE = 2.5L POWER TECH I-4 Cyl. EVA = 4.7L V8 MPI	DDC = TRANSMISSION - 5-SPEED HD MANUAL DG4 = TRANSMISSION-MULTI-SPEED AUTO, 45RFE DGK = TRANSMISSION - 4-SPD. AUTOMATIC,42RE DGT = TRANSMISSION - 4-SPD. AUTOMATIC,46RE DGO = AUTO. TRANS.

Drive Pulleys 3.9L, 5.9L Engine
Figure 7-410

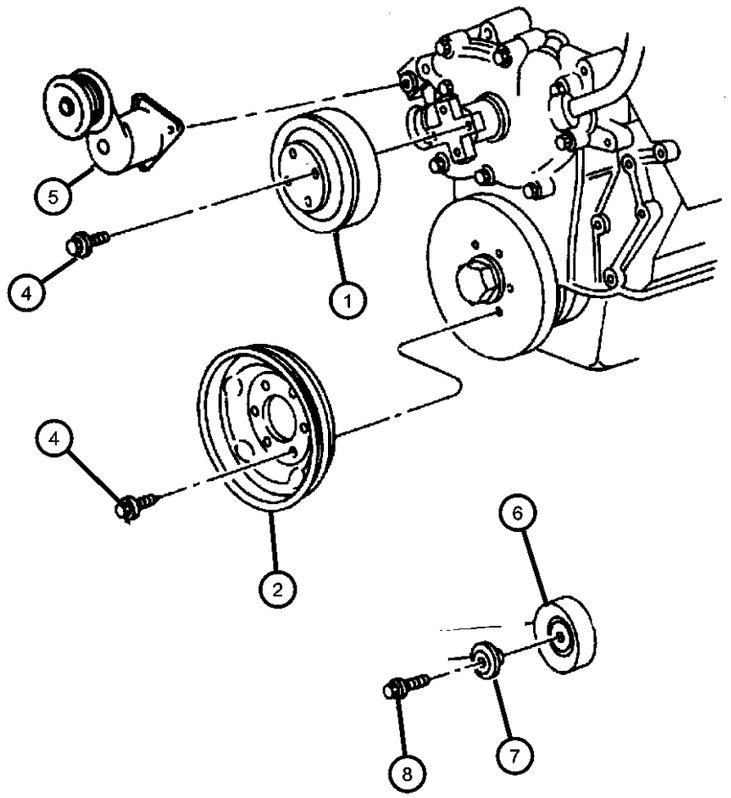

ITEM	PART NUMBER	QTY	LINE	SERIES	BODY	ENGINE	TRANS	TRIM	DESCRIPTION
Note: Sales Code EH0 = 3.9L Gas Engine									
Note: Sales Code EM0 = 5.9L Gas Engine									
1	53030959	1							PULLEY, Water Pump, Service with Pump, (NOT SERVICED)
2	53010222	1				EH0			PULLEY, Crankshaft
-3	53021284AA	1				EM0			DAMPER, Crankshaft
4	06034256	6				EH0			SCREW AND WASHER, Hex Head, .312-18x.75
5	53010158	1				EH0, EM0			TENSIONER, Belt
6	53009508	1				EH0, EM0			PULLEY, Idler
7	33002201	1				EH0, EM0			BUSHING, Idler Pulley
8	06035838	1				EH0, EM0			BOLT

DAKOTA (AN)

SERIES	LINE	BODY	ENGINE	TRANSMISSION
L = Quad Cab	1 = Dakota 2WD	31 = CLUB CAB 2-DR 6.5 FT BOX	EPO = 2.5L 4 Cyl.	DDC = TRANSMISSION - 5-SPEED HD MANUAL
L = Regular Cab	5 = Dakota 4WD	61 = REG CAB 6.5 FT BOX	EHO = 3.9L 6 Cyl.	DG4 = TRANSMISSION-MULTI-SPEED AUTO, 45RFE
L = Club Cab		84 = CREW CAB 4-DR W.B.1	EMO = 5.9L 8 Cyl.	DGK = TRANSMISSION - 4-SPD. AUTOMATIC,42RE
			EVO = 4.7L Magnum	DGT = TRANSMISSION - 4-SPD. AUTOMATIC,46RE
			EHC = 3.9L SMPI V6	DGO = AUTO. TRANS.
			EML = 5.9L V8 MPI Engine	
			EPE = 2.5L POWER TECH I-4 Cyl.	
			EVA = 4.7L V8 MPI	

Drive Belts 2.5L Engine
Figure 7-507

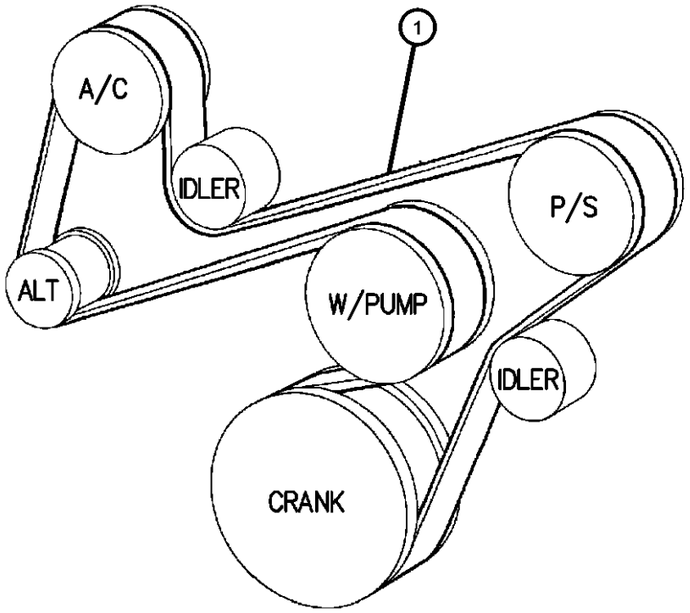

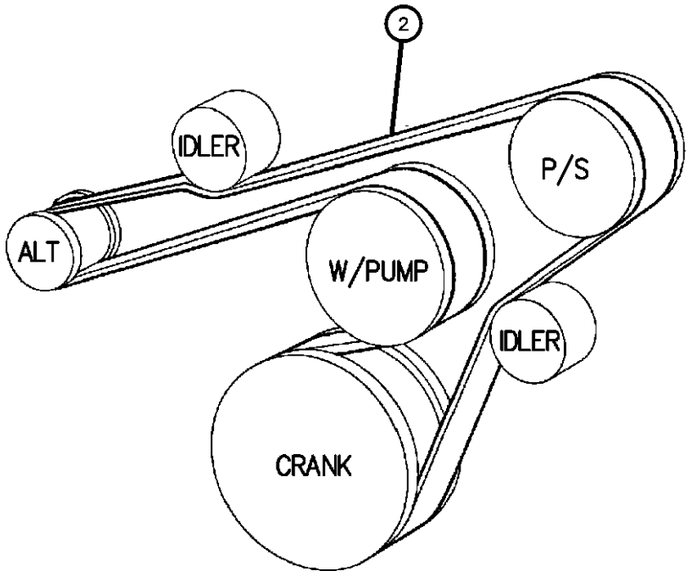

ITEM	PART NUMBER	QTY	LINE	SERIES	BODY	ENGINE	TRANS	TRIM	DESCRIPTION
Note: Sales Code EP0 = 2.5L Gas Engine									
1	04854259	1				EP0			BELT, Accessory Drive, w/Air Condition
2	04854258	1				EP0			BELT, Accessory Drive, w/o Air Condition
-3	53010298	1				EP0			LABEL, Belt Routing

- ---- ---

DAKOTA (AN)

SERIES	LINE	BODY	ENGINE	TRANSMISSION
L = Quad Cab	1 = Dakota 2WD	31 = CLUB CAB 2-DR 6.5 FT BOX	EPO = 2.5L 4 Cyl.	DDC = TRANSMISSION - 5-SPEED HD MANUAL
L = Regular Cab	5 = Dakota 4WD	61 = REG CAB 6.5 FT BOX	EHO = 3.9L 6 Cyl.	DG4 = TRANSMISSION-MULTI-SPEED AUTO, 45RFE
L = Club Cab		84 = CREW CAB 4-DR W.B.1	EMO = 5.9L 8 Cyl.	DGK = TRANSMISSION - 4-SPD. AUTOMATIC,42RE
			EVO = 4.7L Magnum	DGT = TRANSMISSION - 4-SPD. AUTOMATIC,46RE
			EHC = 3.9L SMPI V6	DGO = AUTO. TRANS.
			EML = 5.9L V8 MPI Engine	
			EPE = 2.5L POWER TECH I-4 Cyl.	
			EVA = 4.7L V8 MPI	

AR = use ase required - = Non illustrrated part

Drive Belts 3.9L, 4.7L, 5.9L Engine
Figure 7-510

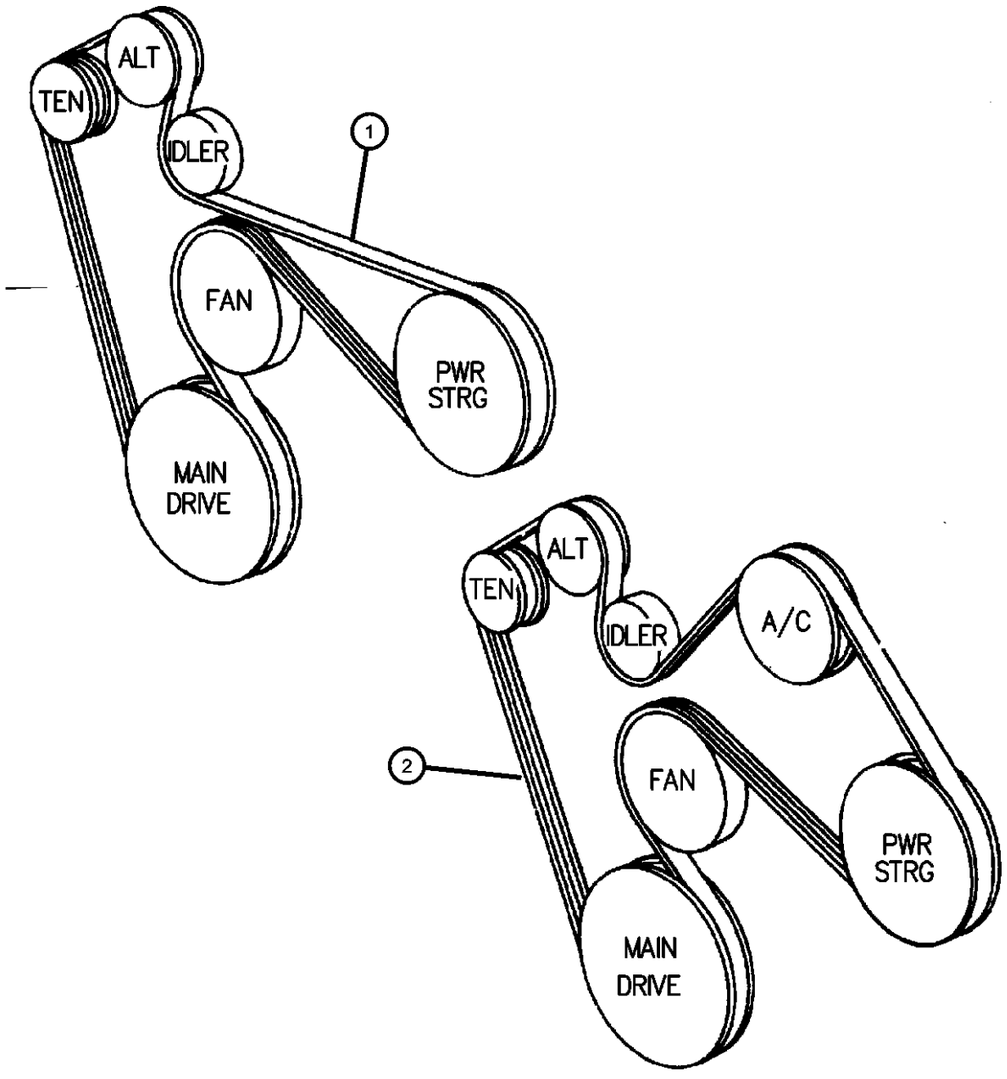

ITEM	PART NUMBER	QTY	LINE	SERIES	BODY	ENGINE	TRANS	TRIM	DESCRIPTION
Note: Sales Code EH0 = 3.9L Gas Engine									
Note: Sales Code EL0 = 5.2L Gas Engine									
Note: Sales Code EM0 = 5.9L Gas Engine									
Note: Sales Code EV0 = 4.7L Gas Engine									
1									BELT, Accessory Drive
	53010304	1				EH0, EM0			Without Air Conditioning
	Q4070884								Mopar V-Line Alternative Part
	53032125AB	1				EV0			Without Air Conditioning
2									BELT, Accessory Drive
	53010303	1				EH0, EM0			With Air Conditioning
	53032125AB	1				EV0			With Air Conditioning
-3									LABEL, Belt Routing
	53008745	1				EH0, EM0			
	53030960	1				EV0			

DAKOTA (AN)

SERIES	LINE	BODY	ENGINE	TRANSMISSION
L = Quad Cab	1 = Dakota 2WD	31 = CLUB CAB 2-DR 6.5 FT BOX	EPO = 2.5L 4 Cyl.	DDC = TRANSMISSION - 5-SPEED HD MANUAL
L = Regular Cab	5 = Dakota 4WD	61 = REG CAB 6.5 FT BOX	EHO = 3.9L 6 Cyl.	DG4 = TRANSMISSION-MULTI-SPEED AUTO, 45RFE
L = Club Cab		84 = CREW CAB 4-DR W.B.1	EMO = 5.9L 8 Cyl.	DGK = TRANSMISSION - 4-SPD. AUTOMATIC,42RE
			EVO = 4.7L Magnum	DGT = TRANSMISSION - 4-SPD. AUTOMATIC,46RE
			EHC = 3.9L SMPI V6	DGO = AUTO. TRANS.
			EML = 5.9L V8 MPI Engine	
			EPE = 2.5L POWER TECH I-4 Cyl.	
			EVA = 4.7L V8 MPI	

Oil Cooler Lines
Figure 7-605

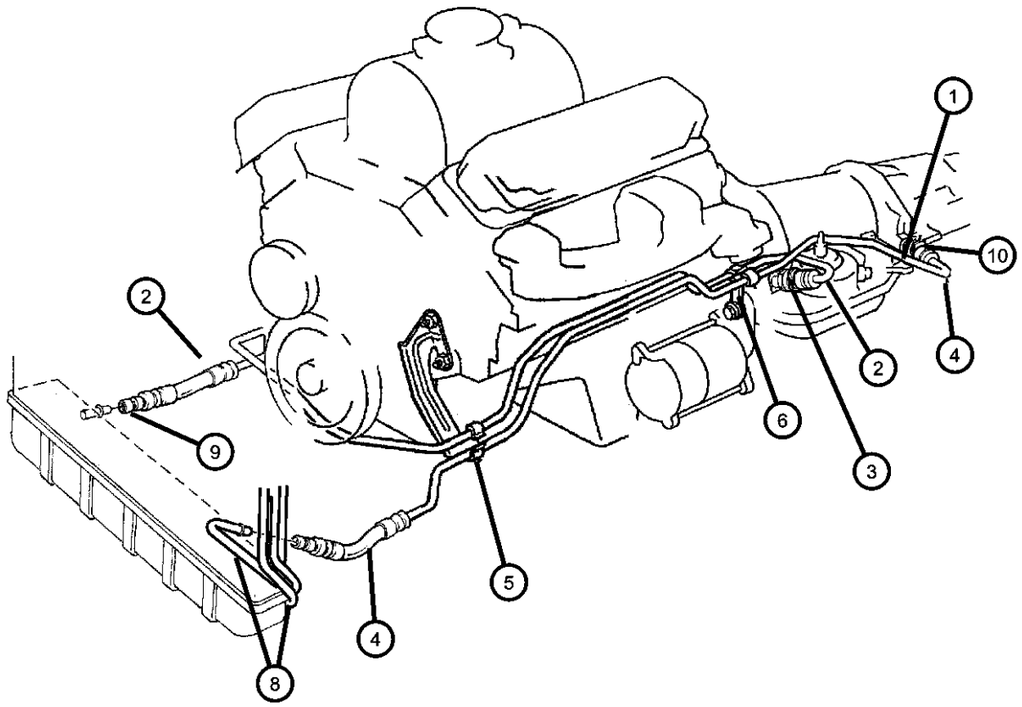

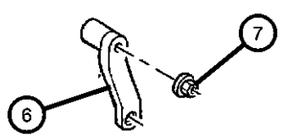

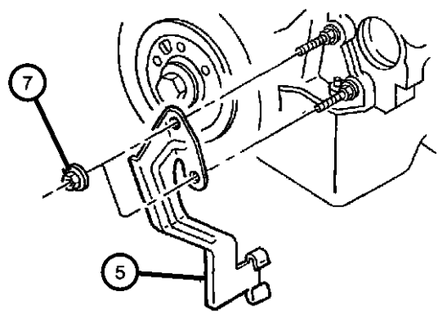

ITEM	PART NUMBER	QTY	LINE	SERIES	BODY	ENGINE	TRANS	TRIM	DESCRIPTION
Note: Sales Code EH0 = 3.9L Gas Engine									
Note: Sales Code EM0 = 5.9L Gas Engine									
1									CONNECTOR, Oil Cooler Line, .375
	52028625AC	1				EM0	DG0		
		1				EH0	DG0		
2									TUBE AND HOSE, Oil Cooler
	52028728AB	1				EV0	DG4		Pressure
	52028753AI	1				EH0	DG0		Pressure
	52028782AF	1				EM0	DG0		Pressure
3									VALVE, Oil Cooler Pressure
	52028463AB	1				EM0	DG0		
		1				EH0	DG0		
4									TUBE AND HOSE, Oil Cooler
	52028655AD	1				EH0	DG0		Return
	52028730AA	1				EV0	DG4		Return
	52028784AE	1				EM0	DG0		Return
5	52117663AB	1				EH0, EM0	DG0		BRACKET, Oil Cooler Tube
6	53006015	1				EH0, EM0	DG0		BRACKET, Oil Cooler Tube
7	J4006001	2				EH0, EM0	DG0		NUT, Hex Flange, .375-16
8									TUBE, Oil Cooler
	05015415AA	1				EH0	DG0		Lower
		1				EM0, EV0	DG0		Lower
	05015416AA	1				EH0	DG0		Upper
		1				EM0, EV0	DG0		Upper
9	05013846AC	1				EM0	DG0		HOSE AND VALVE, Transmission
10									NUT, Transmission Case
	04799433AB	2	5				DG4		
		2	1				DG4		

DAKOTA (AN)

SERIES	LINE	BODY	ENGINE	TRANSMISSION
L = Quad Cab L = Regular Cab L = Club Cab	1 = Dakota 2WD 5 = Dakota 4WD	31 = CLUB CAB 2-DR 6.5 FT BOX 61 = REG CAB 6.5 FT BOX 84 = CREW CAB 4-DR W.B.1	EPO = 2.5L 4 Cyl. EHO = 3.9L 6 Cyl. EMO = 5.9L 8 Cyl. EVO = 4.7L Magnum EHC = 3.9L SMPI V6 EML = 5.9L V8 MPI Engine EPE = 2.5L POWER TECH I-4 Cyl. EVA = 4.7L V8 MPI	DDC = TRANSMISSION - 5-SPEED HD MANUAL DG4 = TRANSMISSION-MULTI-SPEED AUTO, 45RFE DGK = TRANSMISSION - 4-SPD. AUTOMATIC,42RE DGT = TRANSMISSION - 4-SPD. AUTOMATIC,46RE DGO = AUTO. TRANS.

Grille And Related Parts
Figure 7-705

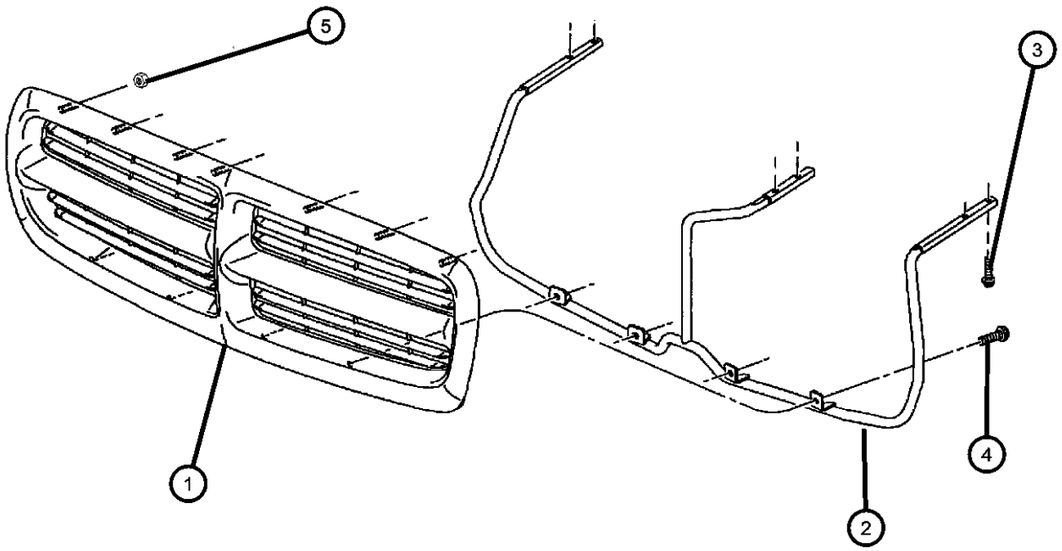

ITEM	PART NUMBER	QTY	LINE	SERIES	BODY	ENGINE	TRANS	TRIM	DESCRIPTION
1									GRILLE, Radiator
	55056092	1							Bright
	5EB75KSJ	1							Argent
	5EH12DX8	1							Black
	5EH12PR4	1							Red
	5EH12SG8	1							Green
	5EH12VB3	1							Medium Blue
	5EH12VYH	1							Yellow
	5EH12XV3	1							Champange
	5EH12GW7	1							White
2	55055210AC	1							BRACKET, Grille
3	06504288	6							SCREW AND WASHER, Hex Head
4	06504288	6							SCREW, Hex Flange Head, M5x0.80x20.00, (NOT SERVICED)
5	06102101AA	7							NUT AND WASHER, Hex, M5x0.80, GRILLE TO HOOD ATTACH

DAKOTA (AN)

SERIES	LINE	BODY	ENGINE	TRANSMISSION
L = Quad Cab	1 = Dakota 2WD	31 = CLUB CAB 2-DR 6.5 FT BOX	EPO = 2.5L 4 Cyl.	DDC = TRANSMISSION - 5-SPEED HD MANUAL
L = Regular Cab	5 = Dakota 4WD	61 = REG CAB 6.5 FT BOX	EHO = 3.9L 6 Cyl.	DG4 = TRANSMISSION-MULTI-SPEED AUTO, 45RFE
L = Club Cab		84 = CREW CAB 4-DR W.B.1	EMO = 5.9L 8 Cyl.	DGK = TRANSMISSION - 4-SPD. AUTOMATIC,42RE
			EVO = 4.7L Magnum	DGT = TRANSMISSION - 4-SPD. AUTOMATIC,46RE
			EHC = 3.9L SMPI V6	DGO = AUTO. TRANS.
			EML = 5.9L V8 MPI Engine	
			EPE = 2.5L POWER TECH I-4 Cyl.	
			EVA = 4.7L V8 MPI	

Group - 8

Electrical

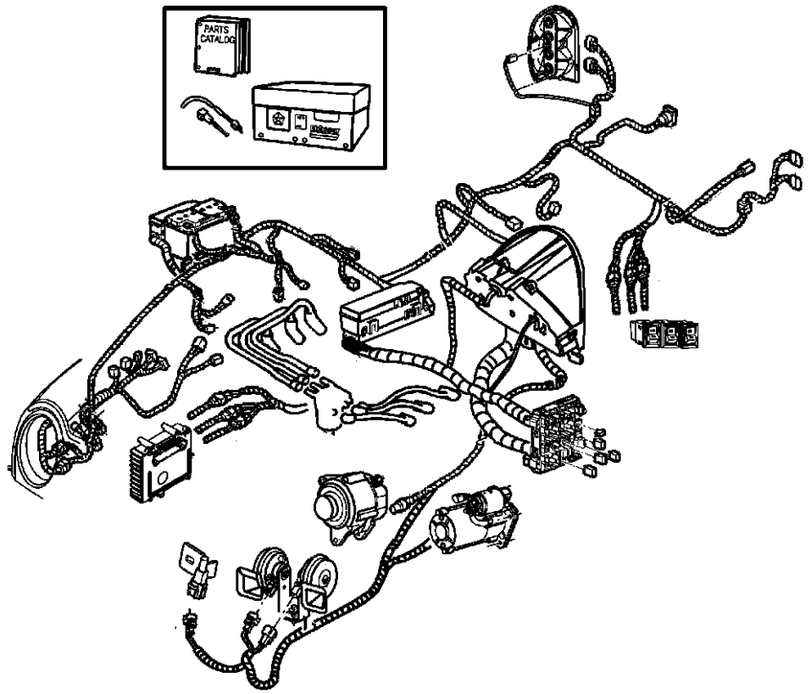

008-100 Starters 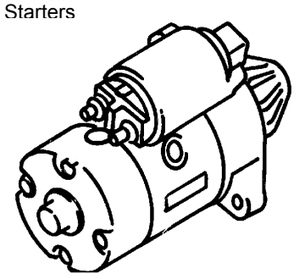	**008-1000** Battery Tray and Cables 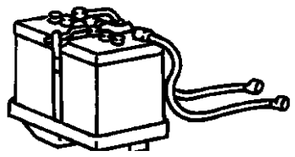	**008-1100** Lamps - Front, Rear and Courtesy 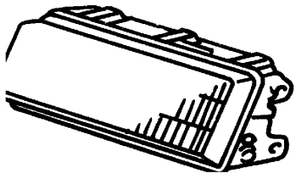	**008-1200** Wiring-Engine & Related Parts 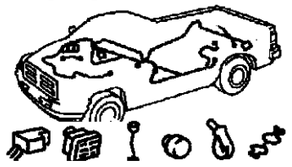
008-1300 Wiring-Headlamp to Dash 	**008-1400** Wiring-Instrument Panel 	**008-1500** Wiring-Body & Accessories 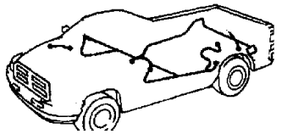	**008-1600** Wiring Repair **WIRING REPAIR PKG.**

008-1900 Spark Plugs-Cables-Coils 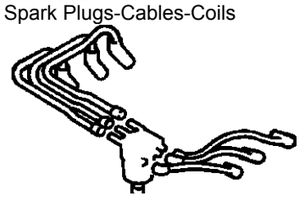	**008-200** Alternators 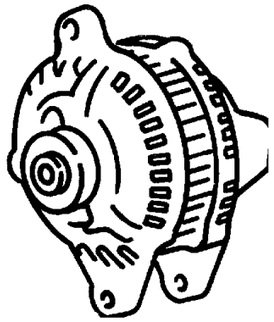	**008-300** Distributor 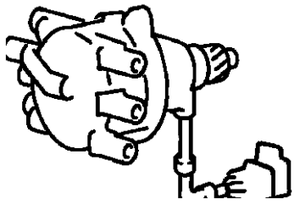	**008-400** Modules 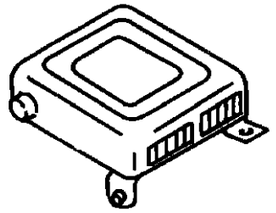
008-500 Relays 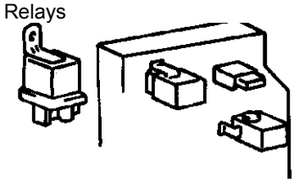	**008-600** Sensors 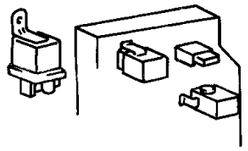	**008-700** Single Board Engine Controllers 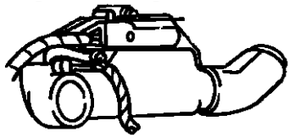	**008-800** Switches 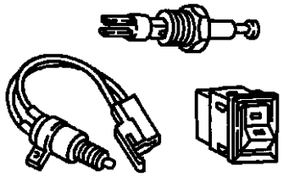
008-900 Horns 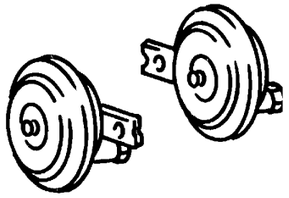			

Group - 8 Electrical

Illustration Title — Group-Fig. No.

Starters
Starter & Mounting ..... Fig. 8 - 106

Alternators
Alternator (Generator) ..... Fig. 8 - 205
Alternator Mounting 2.5L Engine ..... Fig. 8 - 211
Alternator Mounting 6-8 Cylinder Engine ..... Fig. 8 - 215

Distributor
Distributors ..... Fig. 8 - 306

Modules
Modules ..... Fig. 8 - 411

Relays
Relays ..... Fig. 8 - 510

Sensors
Sensors ..... Fig. 8 - 610

Single Board Engine Controllers
Single Board Engine Controllers (JTEC) ..... Fig. 8 - 710

Switches
Switches ..... Fig. 8 - 811

Horns
Horn & Mounting ..... Fig. 8 - 911

Battery Tray and Cables
Battery Tray & Cables ..... Fig. 8 - 1011

Lamps - Front, Rear and Courtesy
Lamp - Front End ..... Fig. 8 - 1131
Lamp - Rear End ..... Fig. 8 - 1141
Lamp - Dome - Courtesy - Reading ..... Fig. 8 - 1151
Bulbs & Sockets ..... Fig. 8 - 1196

Wiring-Engine & Related Parts
Wiring - Engine ..... Fig. 8 - 1211

Wiring-Headlamp to Dash
Wiring - Headlamp / Dash ..... Fig. 8 - 1311

Wiring-Instrument Panel
Wiring - Instrument Panel ..... Fig. 8 - 1411

Wiring-Body & Accessories
Wiring - Body & Accessory ..... Fig. 8 - 1511

Wiring Repair
Wiring Repair Packages ..... Fig. 8 - 1605

Spark Plugs-Cables-Coils
Spark Plugs - Cables - Coils ..... Fig. 8 - 1906

Starter & Mounting
Figure 8-106

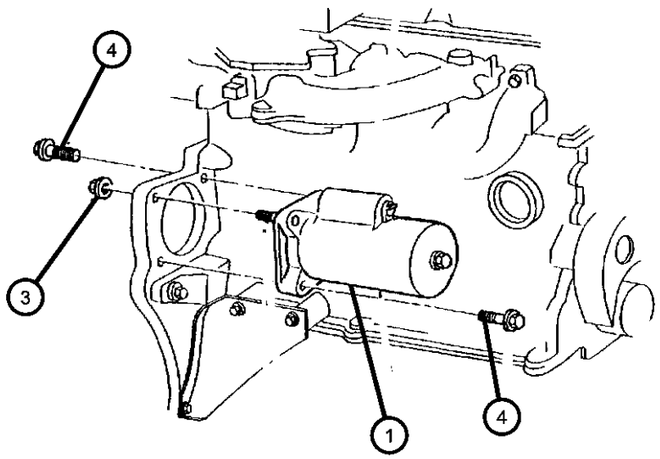

4 CYLINDER

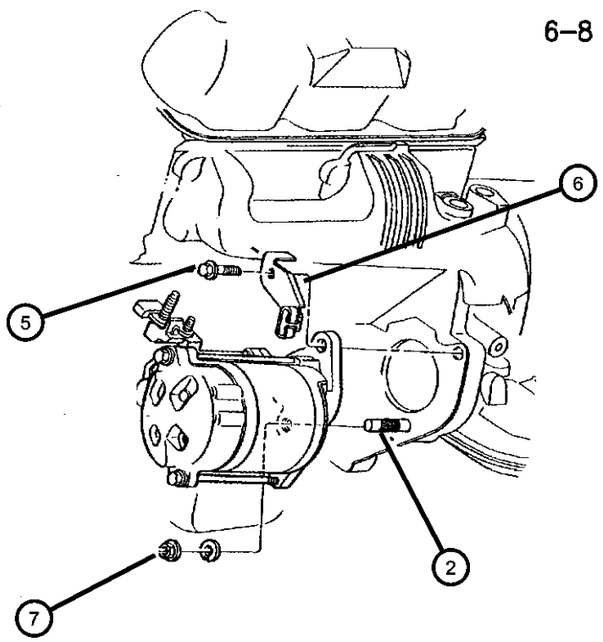

6–8 CYLINDER

ITEM	PART NUMBER	QTY	LINE	SERIES	BODY	ENGINE	TRANS	TRIM	DESCRIPTION
EP0=2.5L Engine EH0=3.9L Engine EL0=5.2L Engine EM0=5.9L Engine DG0=Automatic Transmission DGT=Automatic Transmission 4 Speed DBB=Manual Transmission									
1									STARTER
	56027702AC	1				EH0, EM0			
	R6027702AC								Mopar Remanufactured Part
		1				EV0	DDC		
	R6027702AC								Mopar Remanufactured Part
	56028715	1				EV0			
	56041013AC	1				EP0			
2									STUD, .437-14/.437-20x2.00
	06035606	1			31, 61, 84	EH0, EM0			
		1			31, 61, 84	EV0	DDC		
3	00271506	1	5		31, 61, 84		DGT		NUT, Hex, .42-20
4	00271506	1							SCREW, Starter Motor, (NOT SERVICED)
5									SCREW AND WASHER, Hex Head, .437-14x1.50
	06035604	1			31, 61, 84	EH0, EM0			
		2			31, 61, 84	EV0	DDC		
6	52117663AB	1				EH0, EM0	DG0		BRACKET, Oil Cooler Tube
7	52117663AB	1							NUT, Hex Flange Lock, .437-14, (NOT SERVICED)
-8	06505222AA	1				EP0			STUD, Starter mounting

DAKOTA (AN)

SERIES	LINE	BODY	ENGINE	TRANSMISSION
L = Quad Cab L = Regular Cab L = Club Cab	1 = Dakota 2WD 5 = Dakota 4WD	31 = CLUB CAB 2-DR 6.5 FT BOX 61 = REG CAB 6.5 FT BOX 84 = CREW CAB 4-DR W.B.1	EPO = 2.5L 4 Cyl. EHO = 3.9L 6 Cyl. EMO = 5.9L 8 Cyl. EVO = 4.7L Magnum EHC = 3.9L SMPI V6 EML = 5.9L V8 MPI Engine EPE = 2.5L POWER TECH I-4 Cyl. EVA = 4.7L V8 MPI	DDC = TRANSMISSION - 5-SPEED HD MANUAL DG4 = TRANSMISSION-MULTI-SPEED AUTO, 45RFE DGK = TRANSMISSION - 4-SPD. AUTOMATIC,42RE DGT = TRANSMISSION - 4-SPD. AUTOMATIC,46RE DGO = AUTO. TRANS.

Alternator (Generator)
Figure 8-205

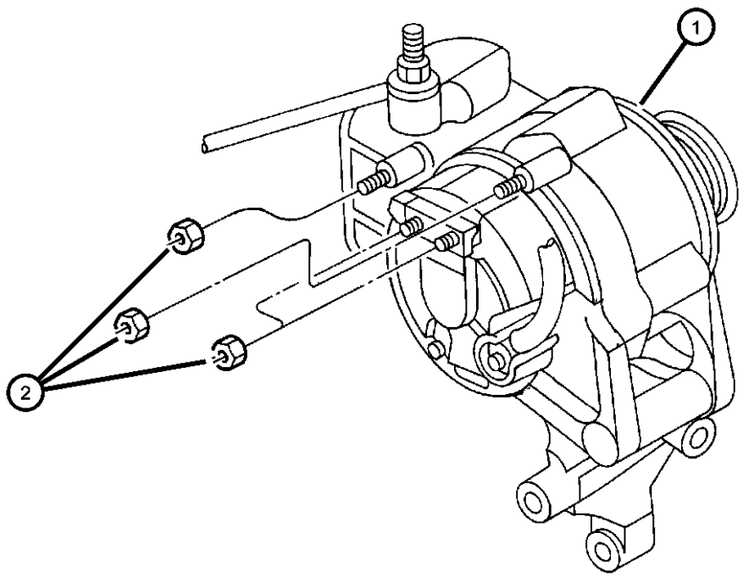

ITEM	PART NUMBER	QTY	LINE	SERIES	BODY	ENGINE	TRANS	TRIM	DESCRIPTION
EP0=2.5L Engine EH0=3.9L Engine EM0=5.9L Engine EV0=4.7L Engine									
1									ALTERNATOR
	56005685AC	1				EP0			117 Amps
	56005686AB	1				EP0			136 Amps
	56027912AB	1				EH0, EM0			117 Amps
	R6027912AB								Mopar Remanufactured Part
	56027913AB	1				EH0, EM0			136 Amps
	R6027913AC								Mopar Remanufactured Part
	56028691	1				EV0			117 Amps
	56041324	1				EV0			136 Amps
2	06502691	4							NUT, Hex Flange Lock, M6x1

DAKOTA (AN)

SERIES	LINE	BODY	ENGINE	TRANSMISSION
L = Quad Cab L = Regular Cab L = Club Cab	1 = Dakota 2WD 5 = Dakota 4WD	31 = CLUB CAB 2-DR 6.5 FT BOX 61 = REG CAB 6.5 FT BOX 84 = CREW CAB 4-DR W.B.1	EPO = 2.5L 4 Cyl. EHO = 3.9L 6 Cyl. EMO = 5.9L 8 Cyl. EVO = 4.7L Magnum EHC = 3.9L SMPI V6 EML = 5.9L V8 MPI Engine EPE = 2.5L POWER TECH I-4 Cyl. EVA = 4.7L V8 MPI	DDC = TRANSMISSION - 5-SPEED HD MANUAL DG4 = TRANSMISSION-MULTI-SPEED AUTO, 45RFE DGK = TRANSMISSION - 4-SPD. AUTOMATIC,42RE DGT = TRANSMISSION - 4-SPD. AUTOMATIC,46RE DGO = AUTO. TRANS.

Alternator Mounting 2.5L Engine
Figure 8-211

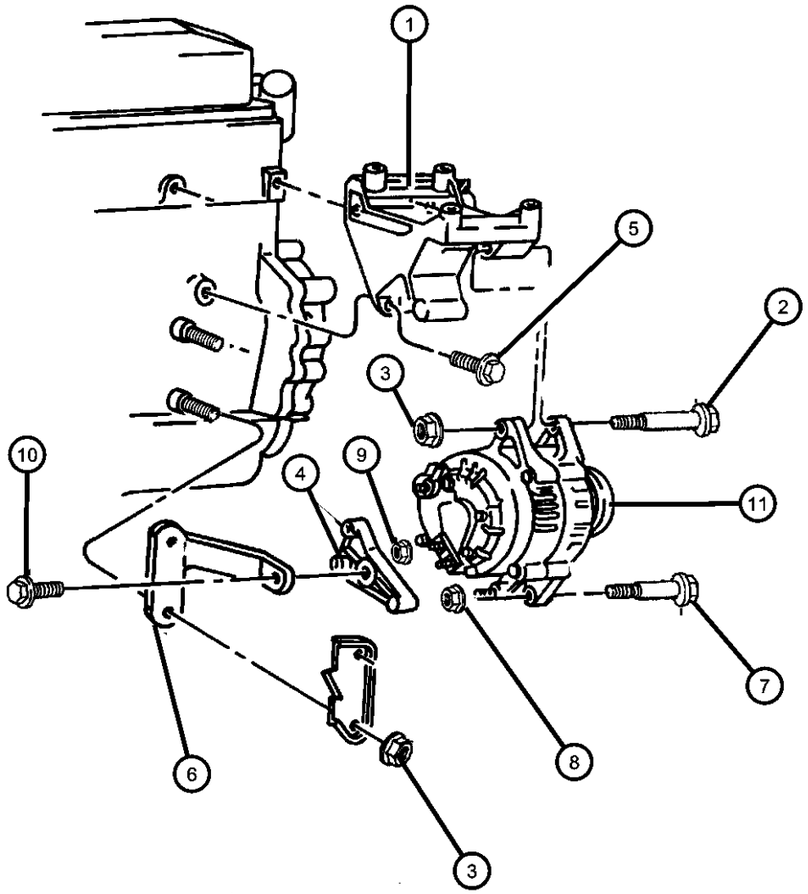

ITEM	PART NUMBER	QTY	LINE	SERIES	BODY	ENGINE	TRANS	TRIM	DESCRIPTION
EP0=2.5L Engine DG0=Automatic Transmission DGT=Automatic Transmission 4 Speed DBB=Manual Transmission									
1	53010207	1				EP0			BRACKET, Alternator And Compressor, Altenator & A/C Mounting
2	06502134	1				EP0			BOLT, Hex Flange Head, M10x1.50x110, Alternator Pivot
3	06502135	1				EP0			NUT, Hex Flange, M10x1.5
4	53007604	1				EP0			BRACKET, Alternator, Rear Mounting Machined
5	06033949	2				EP0			BOLT, Hex Head, .375-16x2.50, Front Cover & Block into Aternator
6	53007506	1				EP0			BRACKET, Alternator, Rear Mounting
7	06502136	1				EP0			BOLT, Hex Flange Head, M10x1.50x55
8	06502691	4							NUT, Hex Flange Lock, M6x1
9	06502691	4							NUT, Plastic Inserted Self Locking, M4 x 0.70, (NOT SERVICED)
10	06502144	1				EP0			SCREW AND WASHER, Hex Head, M10x1.5x25
11									ALTERNATOR
	56005685AC	1				EP0			117 Amps
	56005686AB	1				EP0			136 Amps

DAKOTA (AN)

SERIES	LINE	BODY	ENGINE	TRANSMISSION
L = Quad Cab L = Regular Cab L = Club Cab	1 = Dakota 2WD 5 = Dakota 4WD	31 = CLUB CAB 2-DR 6.5 FT BOX 61 = REG CAB 6.5 FT BOX 84 = CREW CAB 4-DR W.B.1	EPO = 2.5L 4 Cyl. EHO = 3.9L 6 Cyl. EMO = 5.9L 8 Cyl. EVO = 4.7L Magnum EHC = 3.9L SMPI V6 EML = 5.9L V8 MPI Engine EPE = 2.5L POWER TECH I-4 Cyl. EVA = 4.7L V8 MPI	DDC = TRANSMISSION - 5-SPEED HD MANUAL DG4 = TRANSMISSION-MULTI-SPEED AUTO, 45RFE DGK = TRANSMISSION - 4-SPD. AUTOMATIC,42RE DGT = TRANSMISSION - 4-SPD. AUTOMATIC,46RE DGO = AUTO. TRANS.

Alternator Mounting 6-8 Cylinder Engine
Figure 8-215

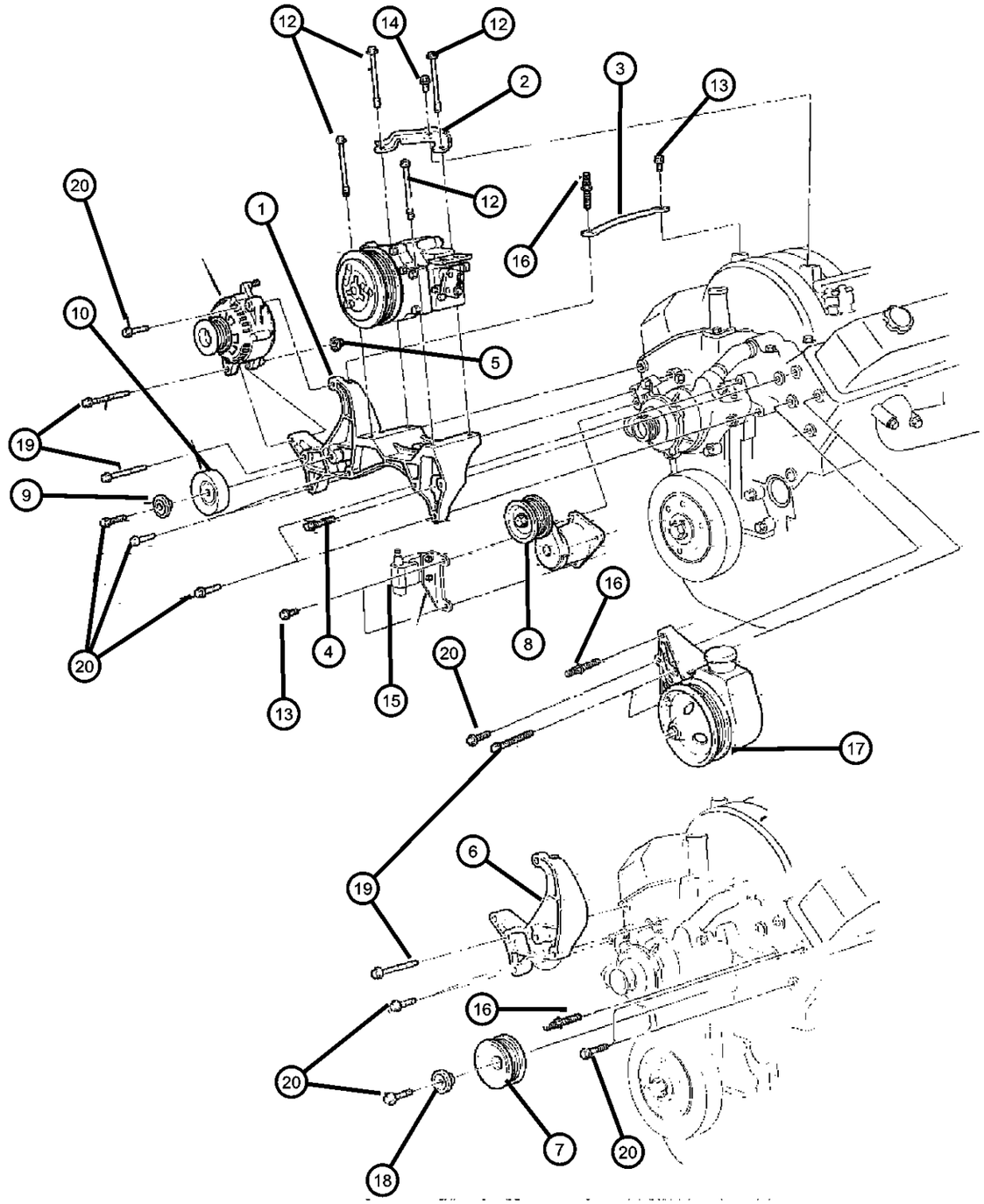

ITEM	PART NUMBER	QTY	LINE	SERIES	BODY	ENGINE	TRANS	TRIM	DESCRIPTION
EH0=3.9L Engine EM0=5.9L Engine EV0=4.7L Engine									
1	53008614	1				EH0, EM0			BRACKET, Alternator And Compressor
2	53010252	1				EH0, EM0			BRACE, A/C Compressor
3	53008746	1				EH0, EM0			BRACE, Alternator
4	06034246	1				EH0, EM0			BOLT, Hex Head, .375-16x.75
5	06034246	1							NUT, Hex Flange Lock, .375-16, (NOT SERVICED)
6	53008618	1				EH0, EM0			BRACKET, Alternator
7	53010222	1				EH0			PULLEY, Crankshaft
8	53010158	1				EH0, EM0			TENSIONER, Belt
9	33002201	1				EH0, EM0			BUSHING, Idler Pulley
10									PULLEY, Idler
	53009508	1				EH0, EM0			
	53031045	1				EV0			without Air Conditioning
-11	53030959	1				EV0			BRACKET, Idler Pulley, without Air Conditioning
12	06034789	4				EH0, EM0			SCREW AND WASHER, Hex Head Coned Lock Washe, .312-18x3.75
13	06034789	4							SCREW AND WASHER, Hex Head, .375-16x1.00, (NOT SERVICED)
14	06034789	4							SCREW AND WASHER, Hex Head, .312-18x.75, (NOT SERVICED)
15									COIL, Ignition
	56028138	8				EV0			
	56028172	1				EH0, EM0			
16	06034985	1				EH0, EM0			STUD, .375-16x3.04
17									PUMP, Power Steering
	52039489AB	1			31, 61	EH0, EM0			
	05166226AA								Mopar Power Steering Fluid Pint
	04883077								Mopar Power Steering Fluid Pint
		1			84	EH0, EM0			
	05166226AA								Mopar Power Steering Fluid Pint

DAKOTA (AN)

SERIES	LINE	BODY	ENGINE	TRANSMISSION
L = Quad Cab L = Regular Cab L = Club Cab	1 = Dakota 2WD 5 = Dakota 4WD	31 = CLUB CAB 2-DR 6.5 FT BOX 61 = REG CAB 6.5 FT BOX 84 = CREW CAB 4-DR W.B.1	EPO = 2.5L 4 Cyl. EHO = 3.9L 6 Cyl. EMO = 5.9L 8 Cyl. EVO = 4.7L Magnum EHC = 3.9L SMPI V6 EML = 5.9L V8 MPI Engine EPE = 2.5L POWER TECH I-4 Cyl. EVA = 4.7L V8 MPI	DDC = TRANSMISSION - 5-SPEED HD MANUAL DG4 = TRANSMISSION-MULTI-SPEED AUTO, 45RFE DGK = TRANSMISSION - 4-SPD. AUTOMATIC,42RE DGT = TRANSMISSION - 4-SPD. AUTOMATIC,46RE DGO = AUTO. TRANS.

Alternator Mounting 6-8 Cylinder Engine
Figure 8-215

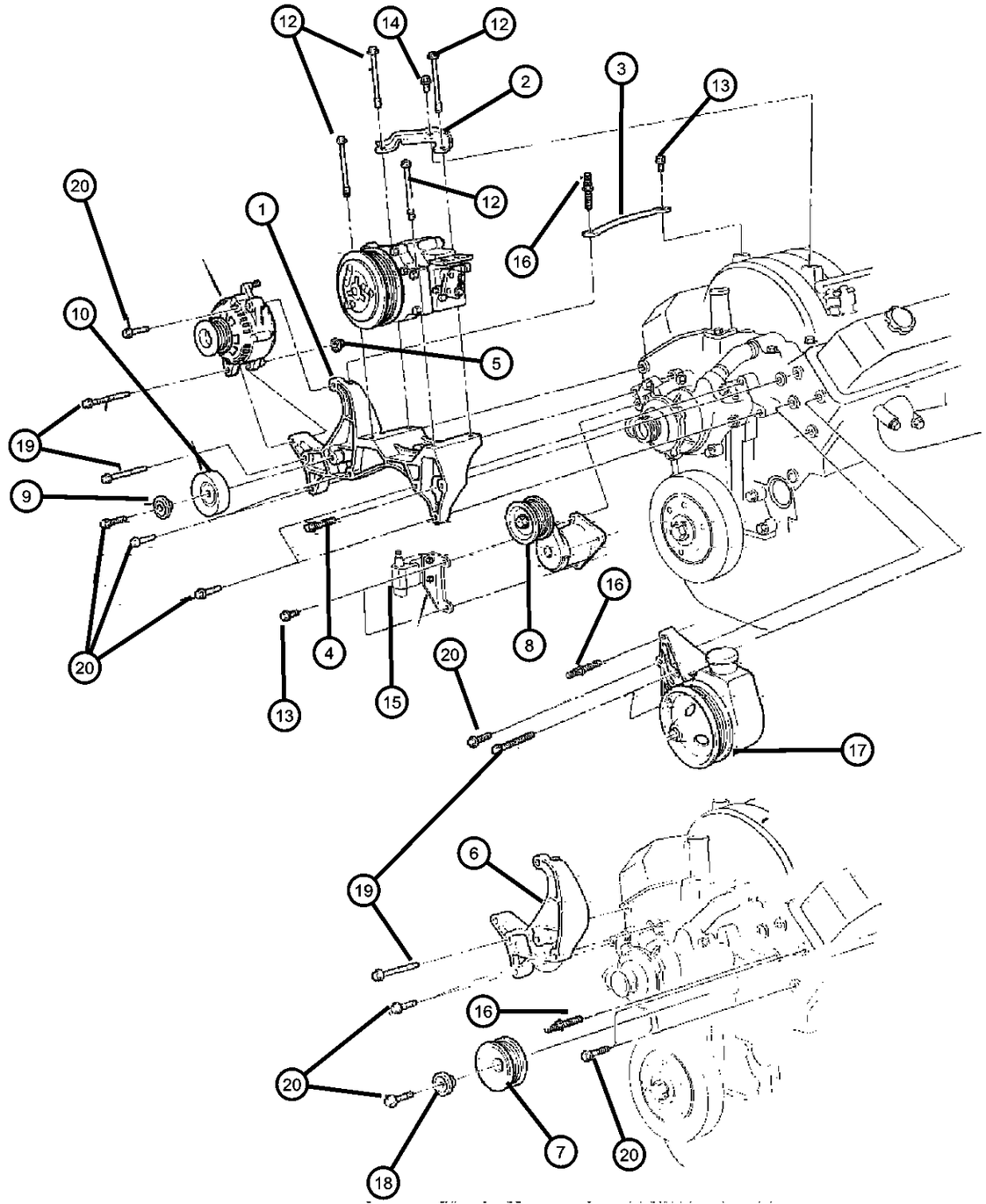

ITEM	PART NUMBER	QTY	LINE	SERIES	BODY	ENGINE	TRANS	TRIM	DESCRIPTION
	04883077								Mopar Power Steering Fluid Pint
	52106253AD	1				EV0			
	05166226AA								Mopar Power Steering Fluid Pint
	04883077								Mopar Power Steering Fluid Pint
18	33002201	1				EH0, EM0			BUSHING, Idler Pulley
19	06034247	1				EH0, EM0			BOLT, Hex Head, .375-16x.25
20	06034247	1							SCREW AND WASHER, Hex Head, .312-18x.75, (NOT SERVICED)

DAKOTA (AN)

SERIES	LINE	BODY	ENGINE	TRANSMISSION
L = Quad Cab L = Regular Cab L = Club Cab	1 = Dakota 2WD 5 = Dakota 4WD	31 = CLUB CAB 2-DR 6.5 FT BOX 61 = REG CAB 6.5 FT BOX 84 = CREW CAB 4-DR W.B.1	EPO = 2.5L 4 Cyl. EHO = 3.9L 6 Cyl. EMO = 5.9L 8 Cyl. EVO = 4.7L Magnum EHC = 3.9L SMPI V6 EML = 5.9L V8 MPI Engine EPE = 2.5L POWER TECH I-4 Cyl. EVA = 4.7L V8 MPI	DDC = TRANSMISSION - 5-SPEED HD MANUAL DG4 = TRANSMISSION-MULTI-SPEED AUTO, 45RFE DGK = TRANSMISSION - 4-SPD. AUTOMATIC,42RE DGT = TRANSMISSION - 4-SPD. AUTOMATIC,46RE DGO = AUTO. TRANS.

Distributors
Figure 8-306

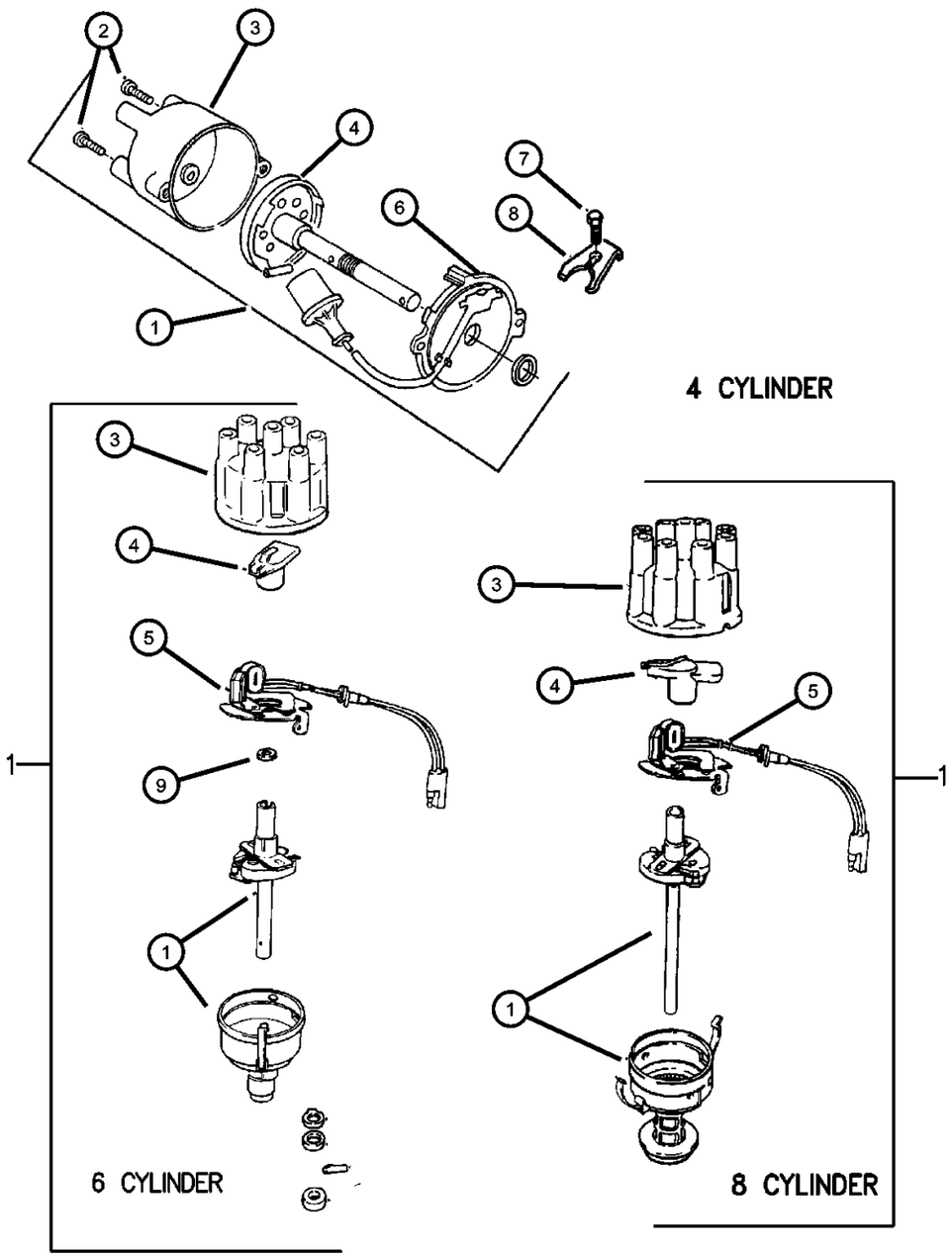

ITEM	PART NUMBER	QTY	LINE	SERIES	BODY	ENGINE	TRANS	TRIM	DESCRIPTION
EP0=2.5L Engine EH0=3.9L Engine EM0=5.9L Engine									
1									DISTRIBUTOR, Engine
	04740338AB	1				EH0			
	04740339AB	1				EM0			
	56041033	1				EP0			
2									SCREW, Hex Head, M5x0.8x27
	56026706	2			31, 61, 84	EH0			
		2			31, 61, 84	EM0			
3									CAP, Distributor
	53006152AB	1			31, 61, 84	EP0			
	53008767	1			31, 61, 84	EM0			
	56026702	1			31, 61, 84	EH0			
4									ROTOR, Distributor
	53008778	1			31, 61, 84	EH0			
		1			31, 61, 84	EM0			
	56027019	1			31, 61, 84	EP0			
5									SWITCH, Distributor Pick-Up
	56028143	1			31, 61, 84	EH0			
		1			31, 61, 84	EM0			
6	56041030	1				EP0			SWITCHPLATE, Distributor
7	06028606	1			31, 61, 84	EH0, EM0			SCREW AND WASHER, Hex Head Lock, .312-18x1.00
8									CLAMP, Distributor
	04343950	1			31, 61, 84	EH0, EM0			
	33004242	1			31, 61, 84	EP0			
9	02875923	1			31, 61, 84	EH0, EM0			O RING, Distributor
-10	J3181288	1			31, 61, 84	EP0			GASKET, Distributor

DAKOTA (AN)

SERIES	LINE	BODY	ENGINE	TRANSMISSION
L = Quad Cab L = Regular Cab L = Club Cab	1 = Dakota 2WD 5 = Dakota 4WD	31 = CLUB CAB 2-DR 6.5 FT BOX 61 = REG CAB 6.5 FT BOX 84 = CREW CAB 4-DR W.B.1	EPO = 2.5L 4 Cyl. EHO = 3.9L 6 Cyl. EMO = 5.9L 8 Cyl. EVO = 4.7L Magnum EHC = 3.9L SMPI V6 EML = 5.9L V8 MPI Engine EPE = 2.5L POWER TECH I-4 Cyl. EVA = 4.7L V8 MPI	DDC = TRANSMISSION - 5-SPEED HD MANUAL DG4 = TRANSMISSION-MULTI-SPEED AUTO, 45RFE DGK = TRANSMISSION - 4-SPD. AUTOMATIC,42RE DGT = TRANSMISSION - 4-SPD. AUTOMATIC,46RE DGO = AUTO. TRANS.

Modules
Figure 8-411

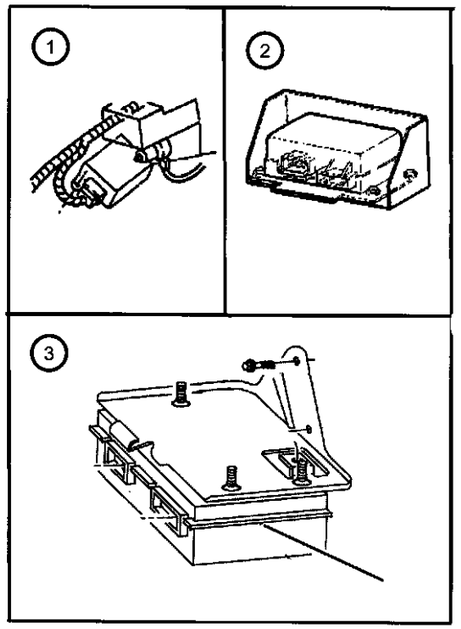

ITEM	PART NUMBER	QTY	LINE	SERIES	BODY	ENGINE	TRANS	TRIM	DESCRIPTION
1	56021561AC	1			31, 61, 84				MODULE, Daytime Running Lamp
2	56043866AB	1			31, 61, 84				MODULE, Air Bag Control
3									MODULE, Time and Alarm
	56021223AM	1			84				w/Keyless Entry
	56045410AC	1			31, 61				w/o Keyless Entry
		1			84				w/o Keyless Entry
	56045605AA	1			31, 61				W/Keyless Entry (Up to 10/07/99)
	56045605AB	1			31, 61				W/Keyless Entry (10/07/99 & After)
-4									CONTROL UNIT, Anti-Lock Brake
	52009898AD	1			31, 61				
	52010212AC	1			84				
-5	56045185AB	1			31, 61, 84				MODULE, Compass Temperature
-6									MODULE, Anti-lock Brakes
	05010917AB	1			31, 61				W/RWAL after 10/25/98
	05010921AE	1			31, 61				W/RWAL up to 10/25/98
	05015558AB	1			84				w/RWAL
	05017702AA	1			31, 61				w/ABS
	05017706AA	1			84				w/ABS
-7	56028227AH	1				EV0	DG0		MODULE, Transmission Control
-8	56028228AA	1				EV0	DG0		BRACKET, Transmission Control Unit

DAKOTA (AN)

SERIES	LINE	BODY	ENGINE	TRANSMISSION
L = Quad Cab L = Regular Cab L = Club Cab	1 = Dakota 2WD 5 = Dakota 4WD	31 = CLUB CAB 2-DR 6.5 FT BOX 61 = REG CAB 6.5 FT BOX 84 = CREW CAB 4-DR W.B.1	EPO = 2.5L 4 Cyl. EHO = 3.9L 6 Cyl. EMO = 5.9L 8 Cyl. EVO = 4.7L Magnum EHC = 3.9L SMPI V6 EML = 5.9L V8 MPI Engine EPE = 2.5L POWER TECH I-4 Cyl. EVA = 4.7L V8 MPI	DDC = TRANSMISSION - 5-SPEED HD MANUAL DG4 = TRANSMISSION-MULTI-SPEED AUTO, 45RFE DGK = TRANSMISSION - 4-SPD. AUTOMATIC,42RE DGT = TRANSMISSION - 4-SPD. AUTOMATIC,46RE DGO = AUTO. TRANS.

Relays
Figure 8-510

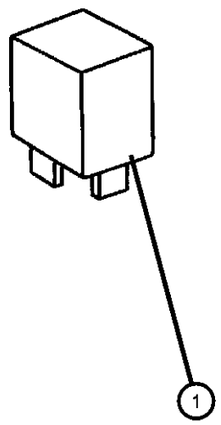

ITEM	PART NUMBER	QTY	LINE	SERIES	BODY	ENGINE	TRANS	TRIM	DESCRIPTION
1									RELAY, Mini
	04671168	1			84				
		1			31, 61, 62				
-2	55056040AB	1							RELAY, A/C, Blower Relay w/Isolator & Bracket
-3	04638271	1	1, 5	L	31, 61, 84				RELAY PACKAGE, Electrical, Horn

DAKOTA (AN)

SERIES	LINE	BODY	ENGINE	TRANSMISSION
L = Quad Cab L = Regular Cab L = Club Cab	1 = Dakota 2WD 5 = Dakota 4WD	31 = CLUB CAB 2-DR 6.5 FT BOX 61 = REG CAB 6.5 FT BOX 84 = CREW CAB 4-DR W.B.1	EPO = 2.5L 4 Cyl. EHO = 3.9L 6 Cyl. EMO = 5.9L 8 Cyl. EVO = 4.7L Magnum EHC = 3.9L SMPI V6 EML = 5.9L V8 MPI Engine EPE = 2.5L POWER TECH I-4 Cyl. EVA = 4.7L V8 MPI	DDC = TRANSMISSION - 5-SPEED HD MANUAL DG4 = TRANSMISSION-MULTI-SPEED AUTO, 45RFE DGK = TRANSMISSION - 4-SPD. AUTOMATIC,42RE DGT = TRANSMISSION - 4-SPD. AUTOMATIC,46RE DGO = AUTO. TRANS.

Sensors
Figure 8-610

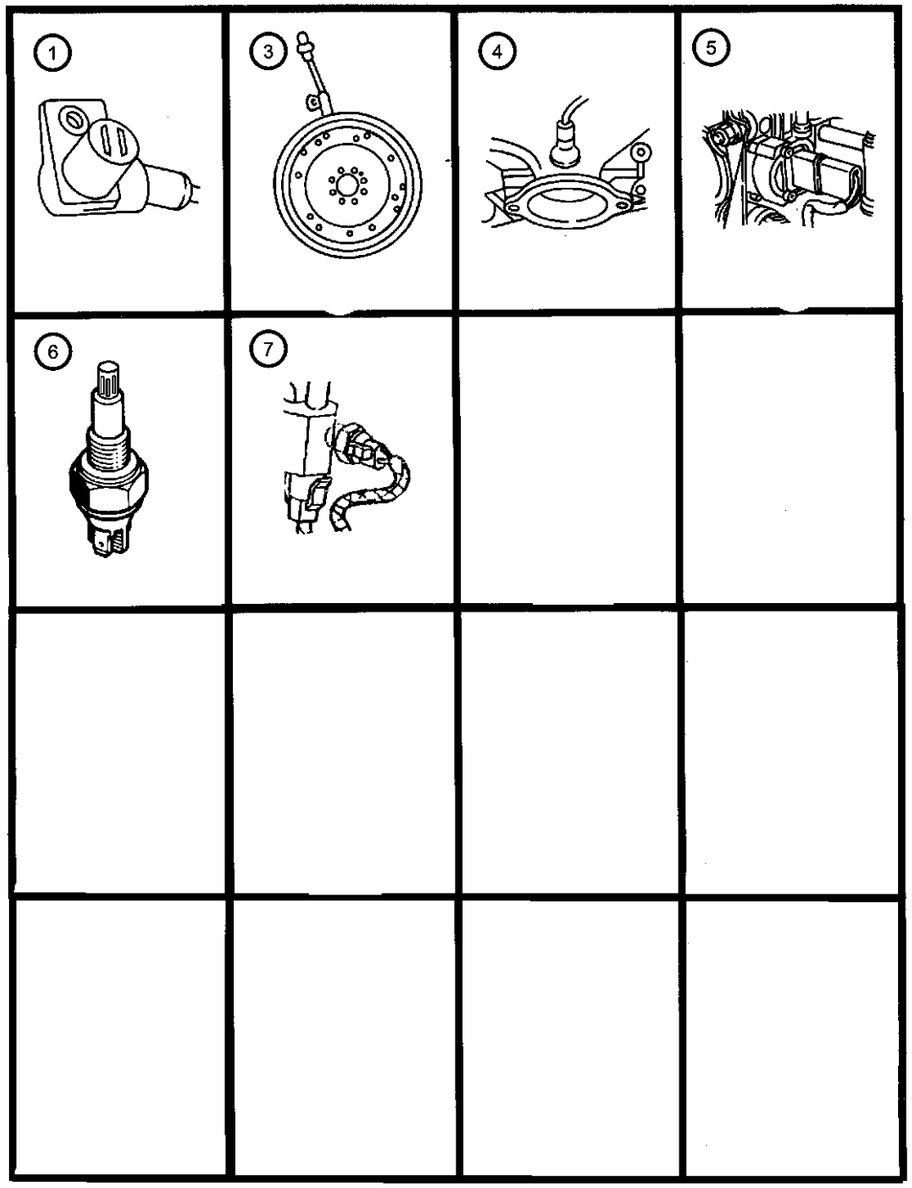

ITEM	PART NUMBER	QTY	LINE	SERIES	BODY	ENGINE	TRANS	TRIM	DESCRIPTION
EP0=2.5L Engine EH0=3.9L Engine EVO= 4.7 Engine EL0=5.2L Engine EM0=5.9L Engine DG0=Automatic Transmission DGT=Automatic Transmission 4 Speed DGK=Automatic 4 Speed DGW=Automatic 4 Speed DBB=Manual Transmission									
1									SENSOR, Anti-Lock Brake
	56027924AE	1	1		31, 61, 84				Right Front
	56027921AD	1	1		31, 61, 84				Left Front
-2									SENSOR, Wheel Speed, Rear Sensor
	56028187AD	1	1				DBB		2WD
		1					DG0		2WD/4WD
	56028229AB	1	5				DBB		4WD
3									SENSOR, Crankshaft Position
	56027865AB	1				EP0			
	56027870	1			31, 61, 84	EH0, EM0	DG0		
	56027871	1			31, 61, 84	EH0	DBB		
	56028136AC	1				EV0			
4									SENSOR, Oxygen
	56028233AA	2			31, 61, 84	EV0			Before Catalyst [NAE]
		1			31, 61, 84	EV0			Before Catalyst [NAA]
		2				EV0			Before Catalyst [NAE]
		1				EV0			Before Catalyst [NAE]
	56028235AA	1				EV0			After Catalyst [NAA]
		1				EV0	DG4		After Catalyst [NAE], Left
		1				EV0	DG4		After Catalyst [NAE], Right
		2				EV0	DDC		After Catalyst [NAE]
	56041213AF	1				EH0, EM0, EP0			Before Catalyst [NAA,NAE]
	56041213AG	1				EH0, EM0, EP0			After Catalyst [NAA,NAE,NAS]
5									SENSOR, Throttle Position

DAKOTA (AN)

SERIES	LINE	BODY	ENGINE	TRANSMISSION
L = Quad Cab L = Regular Cab L = Club Cab	1 = Dakota 2WD 5 = Dakota 4WD	31 = CLUB CAB 2-DR 6.5 FT BOX 61 = REG CAB 6.5 FT BOX 84 = CREW CAB 4-DR W.B.1	EPO = 2.5L 4 Cyl. EHO = 3.9L 6 Cyl. EMO = 5.9L 8 Cyl. EVO = 4.7L Magnum EHC = 3.9L SMPI V6 EML = 5.9L V8 MPI Engine EPE = 2.5L POWER TECH I-4 Cyl. EVA = 4.7L V8 MPI	DDC = TRANSMISSION - 5-SPEED HD MANUAL DG4 = TRANSMISSION-MULTI-SPEED AUTO, 45RFE DGK = TRANSMISSION - 4-SPD. AUTOMATIC,42RE DGT = TRANSMISSION - 4-SPD. AUTOMATIC,46RE DGO = AUTO. TRANS.

Sensors
Figure 8-610

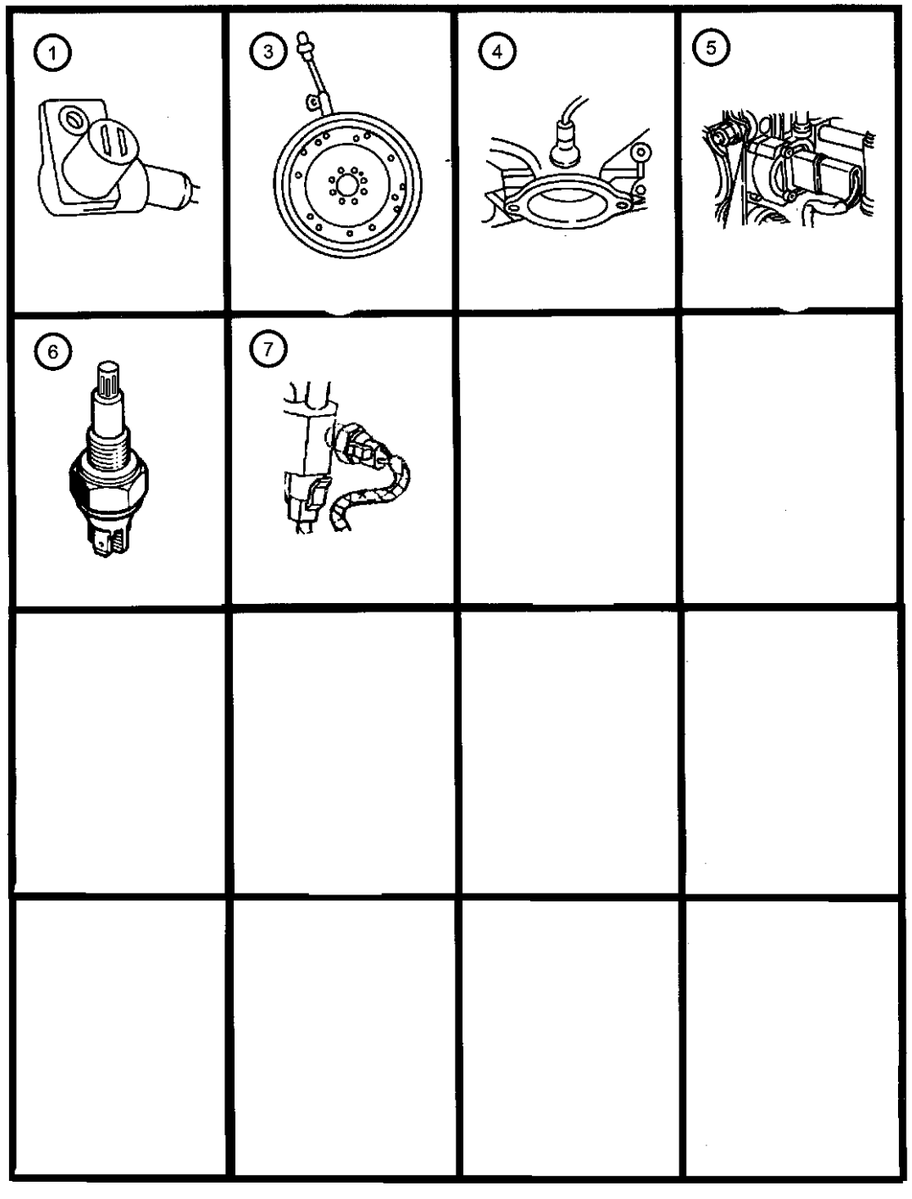

ITEM	PART NUMBER	QTY	LINE	SERIES	BODY	ENGINE	TRANS	TRIM	DESCRIPTION
	04874371AC	1				EP0			
	04882219	1				EM0			
		1				EH0			
	04882219AB	1				EV0			
6									SENSOR, Air Temperature
	56027872	1			31, 61, 84	EM0, EH0			
		1			31, 61, 84	EV0			
		1				EP0			
7									SENSOR, Coolant Temperature
	56027873	1				EV0			
	56004815	1			84, 31, 61	EH0, EM0			
		1			31, 61, 84	EP0			
		1				EP0			
-8	04882797	1			31, 61, 84	EM0, EP0, EV0			SENSOR, Washer Fluid Level
-9									SENSOR, MAP
	56029405	1			31, 61, 84	EH0, EM0			
		1				EP0			
	56041018	1			31, 61, 84	EV0			
-10	01556385	1	5		31, 61, 84		DGK		O RING
-11	04707537	1							INSULATOR, 4 Way, 02 Sensor Plug (Black)
-12	56042395	1			31, 61, 84				SENSOR, Ambient Temperature
-13	56028133AD	1				EV0			SENSOR, Camshaft
-14									SENSOR KIT, Anti-Lock Brakes
	05016338AA	1	5						Right
	05016339AA	1	5						Left
-15									SWITCH, Neutral, Safety, Back Up
	56028181AB	1	1				DGK		Transmission Range Sensor
		1	1				DGT		Transmission Range Sensor
		1	5				DGK		Transmission Range Sensor
		1	5				DGT		Transmission Range Sensor

DAKOTA (AN)

SERIES	LINE	BODY	ENGINE	TRANSMISSION
L = Quad Cab L = Regular Cab L = Club Cab	1 = Dakota 2WD 5 = Dakota 4WD	31 = CLUB CAB 2-DR 6.5 FT BOX 61 = REG CAB 6.5 FT BOX 84 = CREW CAB 4-DR W.B.1	EPO = 2.5L 4 Cyl. EHO = 3.9L 6 Cyl. EMO = 5.9L 8 Cyl. EVO = 4.7L Magnum EHC = 3.9L SMPI V6 EML = 5.9L V8 MPI Engine EPE = 2.5L POWER TECH I-4 Cyl. EVA = 4.7L V8 MPI	DDC = TRANSMISSION - 5-SPEED HD MANUAL DG4 = TRANSMISSION-MULTI-SPEED AUTO, 45RFE DGK = TRANSMISSION - 4-SPD. AUTOMATIC,42RE DGT = TRANSMISSION - 4-SPD. AUTOMATIC,46RE DGO = AUTO. TRANS.

AR = use ase required - = Non illustrrated part

Single Board Engine Controllers (JTEC)
Figure 8-710

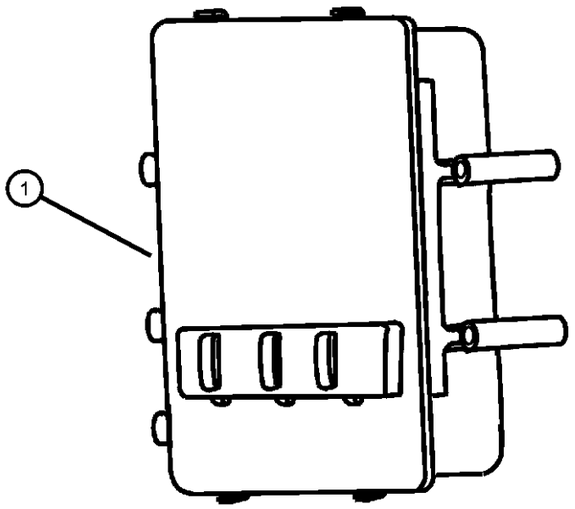

ITEM	PART NUMBER	QTY	LINE	SERIES	BODY	ENGINE	TRANS	TRIM	DESCRIPTION
EP0=2.5L Engine EH0=3.9L Engine EM0=5.9L Engine EVA=4.7L Engine DG0=Automatic Transmission DBB=Manual Transmission									
1									MODULE, Powertrain Control
	56028559AC	1			84	EM0	DG0		California Emission
	56040339AE	1				EP0	DBB		Federal Emission
	56040340AE	1				EP0	DBB		California Emission
	56040341AC	1				EP0	DBB		Leaded Fuel Emission
	56040344AE	1				EH0	DBB		USA 50 States Emission
	56040345AC	1				EH0	DBB		Leaded Fuel Emission
	56040348AE	1				EH0	DG0		USA 50 States Emission
	56040349AC	1				EH0	DG0		Leaded Fuel Emission
	56040355AD	1				EVA	DBB		Federal Emission
	56040356AC	1				EVA	DBB		California Emission
	56040357AF	1	1		61	EVA	DG0		Federal Emission
	56040358AF	1	1		61	EVA	DG0		California Emission
	56040359AF	1	5			EVA	DG0		Federal Emission
	56040360AG	1	5		31, 61	EVA	DG0		California Emission
		1	5		84	EVA	DG0		California Emission
	56040405AF	1			84	EM0	DG0		Federal Emission
		1			31, 61	EM0	DG0		Federal Emission
	56040406AF	1			31, 61	EM0	DG0		California Emission
	56040429AF	1	1		31, 84	EVA	DG0		Federal Emission
	56040430AF	1	1		31	EVA	DG0		California Emission
		1	1		84	EVA	DG0		California Emission
-2	56040021	1			31, 61, 84				BRACKET, Module, Module Mounting

DAKOTA (AN)

SERIES	LINE	BODY	ENGINE	TRANSMISSION
L = Quad Cab L = Regular Cab L = Club Cab	1 = Dakota 2WD 5 = Dakota 4WD	31 = CLUB CAB 2-DR 6.5 FT BOX 61 = REG CAB 6.5 FT BOX 84 = CREW CAB 4-DR W.B.1	EPO = 2.5L 4 Cyl. EHO = 3.9L 6 Cyl. EMO = 5.9L 8 Cyl. EVO = 4.7L Magnum EHC = 3.9L SMPI V6 EML = 5.9L V8 MPI Engine EPE = 2.5L POWER TECH I-4 Cyl. EVA = 4.7L V8 MPI	DDC = TRANSMISSION - 5-SPEED HD MANUAL DG4 = TRANSMISSION-MULTI-SPEED AUTO, 45RFE DGK = TRANSMISSION - 4-SPD. AUTOMATIC,42RE DGT = TRANSMISSION - 4-SPD. AUTOMATIC,46RE DGO = AUTO. TRANS.

Switches
Figure 8-811

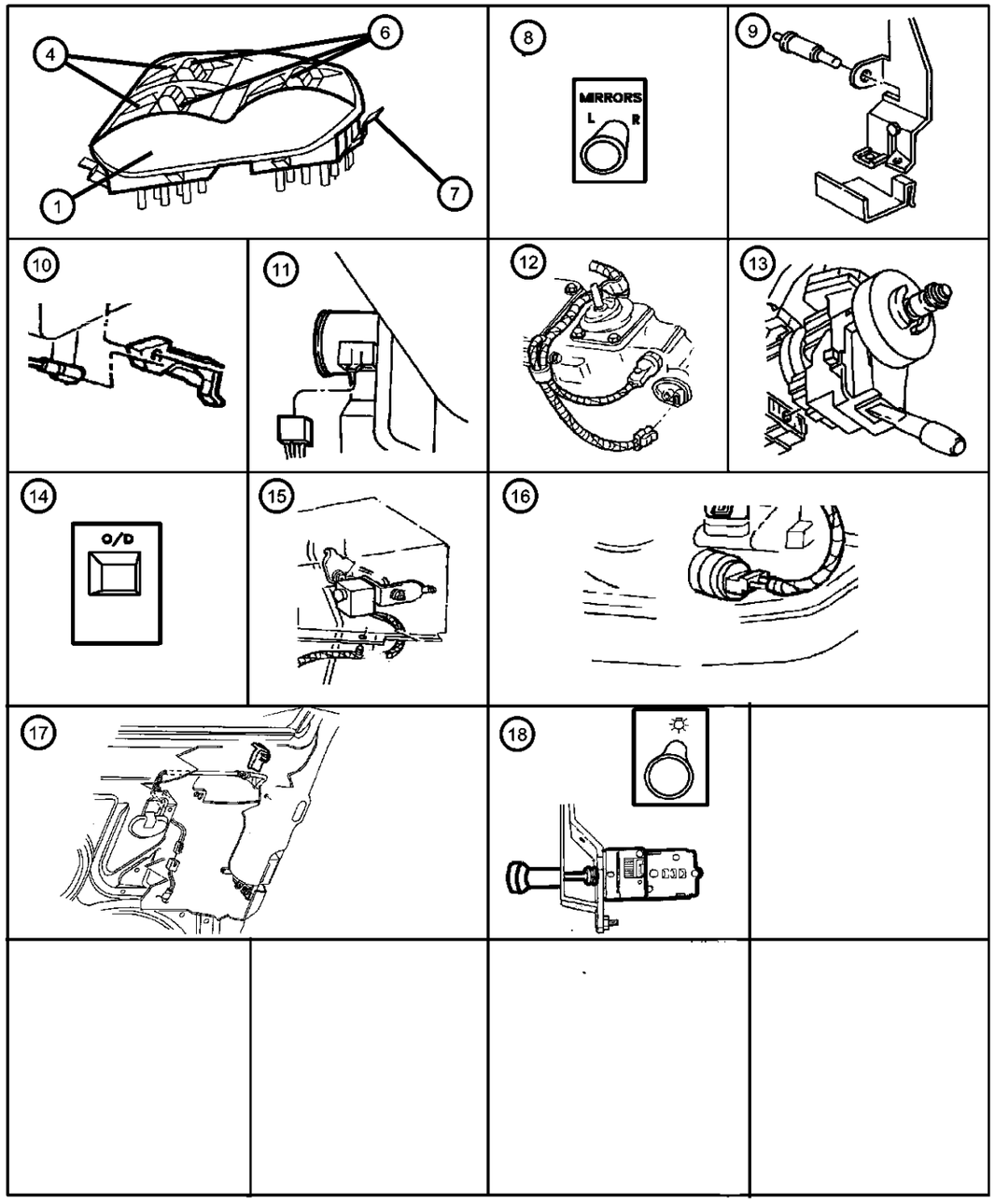

ITEM	PART NUMBER	QTY	LINE	SERIES	BODY	ENGINE	TRANS	TRIM	DESCRIPTION
EP0=2.5L Engine EH0=3.9L Engine EV0=4.7L Engine DG0=Automatic Transmission DG4=Automatic Multi-Speed Transmission DGT=Automatic Transmission 4 Speed DGK=Automatic 4 Speed DBB=Manual Transmission DDK=Manual Transmission 5 Speed (Heavy Duty) DDQ=Manual Transmission 5 Speed									
1									BEZEL, Power Window/Door Lock Switch, Front Door
	56020390AB	1			31, 61				2 Gang
	56021638	1			84				2 Gang (Passenger Side)
	56021757	1			84				2 Gang (Driver Side)
	56045302AA	1			31, 61				3 Gang
	5GS21DX9AA	1			84				Rear (Black), Left
	5GS22DX9AA	1			84				Rear (Black), Right
-2									BEZEL, Power Window Switch, Rear Door
	5GS23DX9AA	1			84				Right
	5GS24DX9AA	1			84				Left
-3	56007695AB	1			84				SWITCH, Power Window, Rear Door
4	56020394	1			31, 61				SWITCH, 2 Gang
-5	56021658	1			84				SWITCH, Window and Door Lock, 6 gang, Left
6									SWITCH, Window and Door Lock
	56021912AA	1			31, 61				3 Gang (Up to 4/10/00)
	56021912AB	1			31, 61				3 Gang (4/10/00& After)
7	04796652	1			31, 61, 62				CLIP, Bezel
8									SWITCH, Mirror
	56019923	1			84				
		1			31, 61				
9	04565022	1							SWITCH AND LAMP, Glove Box
10	04221463	1							SWITCH, Parking Brake
11									SWITCH, Ignition

DAKOTA (AN)

SERIES	LINE	BODY	ENGINE	TRANSMISSION
L = Quad Cab L = Regular Cab L = Club Cab	1 = Dakota 2WD 5 = Dakota 4WD	31 = CLUB CAB 2-DR 6.5 FT BOX 61 = REG CAB 6.5 FT BOX 84 = CREW CAB 4-DR W.B.1	EPO = 2.5L 4 Cyl. EHO = 3.9L 6 Cyl. EMO = 5.9L 8 Cyl. EVO = 4.7L Magnum EHC = 3.9L SMPI V6 EML = 5.9L V8 MPI Engine EPE = 2.5L POWER TECH I-4 Cyl. EVA = 4.7L V8 MPI	DDC = TRANSMISSION - 5-SPEED HD MANUAL DG4 = TRANSMISSION-MULTI-SPEED AUTO, 45RFE DGK = TRANSMISSION - 4-SPD. AUTOMATIC,42RE DGT = TRANSMISSION - 4-SPD. AUTOMATIC,46RE DGO = AUTO. TRANS.

Switches
Figure 8-811

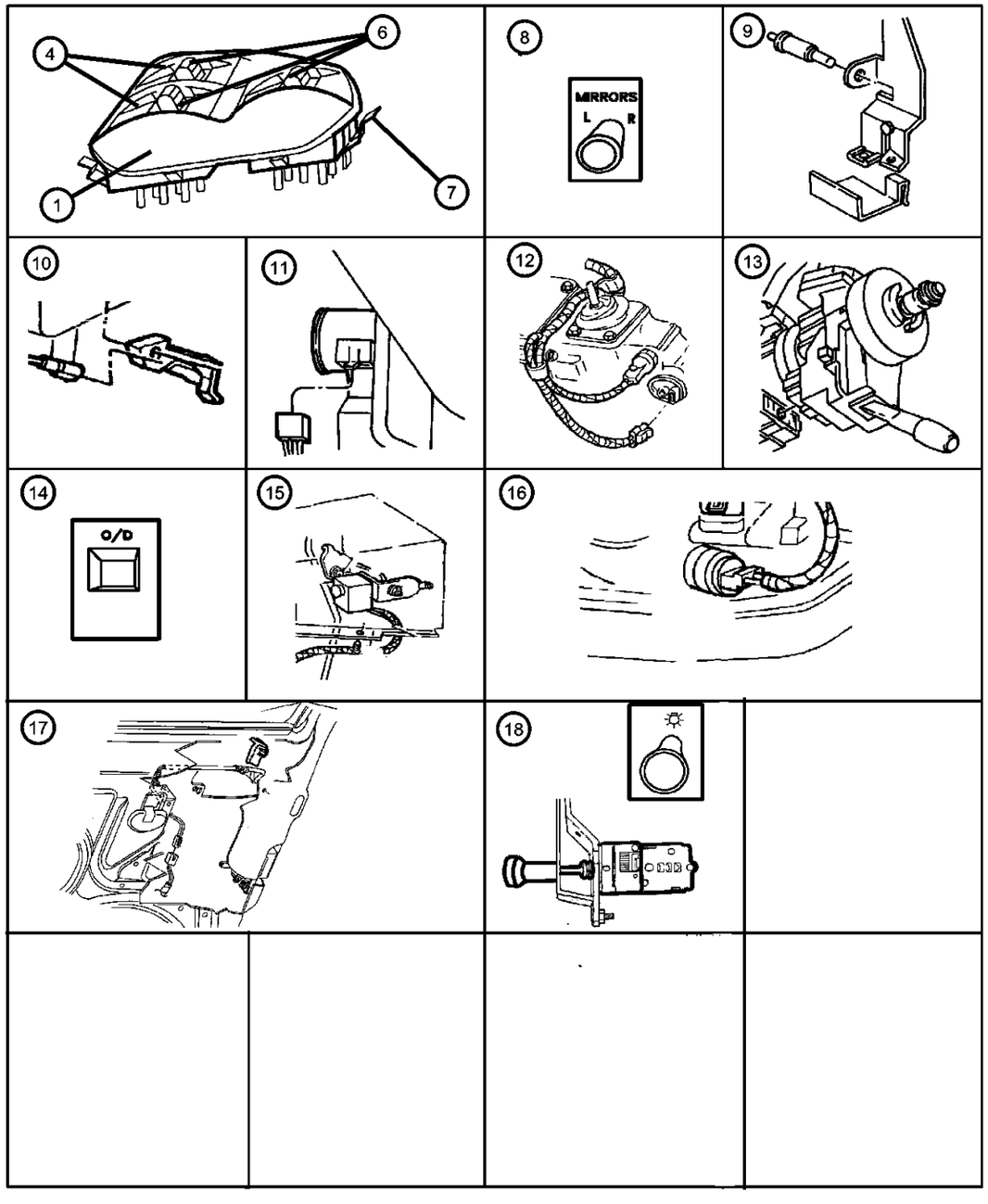

ITEM	PART NUMBER	QTY	LINE	SERIES	BODY	ENGINE	TRANS	TRIM	DESCRIPTION
	04815812	1					DG4		w/Automatic Transmission
	56021346	1					DBB		w/Manual Transmission
12									SWITCH, Back Up Lamp
	04741121	1	1			EH0, EV0	DBB		
		1	5		31, 61, 84	EH0, EV0	DBB		
	56007163	1	1			EP0	DDK		
13									SWITCH, Multifunction
	05269377	1					DBB		
		1					DG0		
		1					DGK, DGT		
		1					DG4		
14									SWITCH, Overdrive Lockout
	56021048	1					DG0		
		1					DGK, DGT		
		1					DG4		
15	05016294AC	1							SWITCH PACKAGE, Stop Lamp
16									SWITCH, Neutral, Safety, Back Up
	56028181AB	1	1				DGK		
		1	1				DGT		
17		1							SWITCH, Door Ajar, Serviced w/Door Latch, (NOT SERVICED)
18									SWITCH, Headlamp
	56021673AD	1							w/Cargo Lamp & w/o Foglamp
	56021674AD	1							w/o Cargo Lamp
	56021675AE	1							w/Cargo Lamp & w/Foglamp
-19									SENDING UNIT, Oil Pressure
	56031005	1				EP0			
		1				EH0, EM0			
		1				EV0			
-20	J0934001	1				EP0			ELBOW, Oil Gauge Sending Unit
-21	56045167AB	1							SWITCH, Passenger Airbag Disarm
-22									KNOB, Power Mirror Switch

DAKOTA (AN)

SERIES	LINE	BODY	ENGINE	TRANSMISSION
L = Quad Cab L = Regular Cab L = Club Cab	1 = Dakota 2WD 5 = Dakota 4WD	31 = CLUB CAB 2-DR 6.5 FT BOX 61 = REG CAB 6.5 FT BOX 84 = CREW CAB 4-DR W.B.1	EPO = 2.5L 4 Cyl. EHO = 3.9L 6 Cyl. EMO = 5.9L 8 Cyl. EVO = 4.7L Magnum EHC = 3.9L SMPI V6 EML = 5.9L V8 MPI Engine EPE = 2.5L POWER TECH I-4 Cyl. EVA = 4.7L V8 MPI	DDC = TRANSMISSION - 5-SPEED HD MANUAL DG4 = TRANSMISSION-MULTI-SPEED AUTO, 45RFE DGK = TRANSMISSION - 4-SPD. AUTOMATIC,42RE DGT = TRANSMISSION - 4-SPD. AUTOMATIC,46RE DGO = AUTO. TRANS.

Switches
Figure 8-811

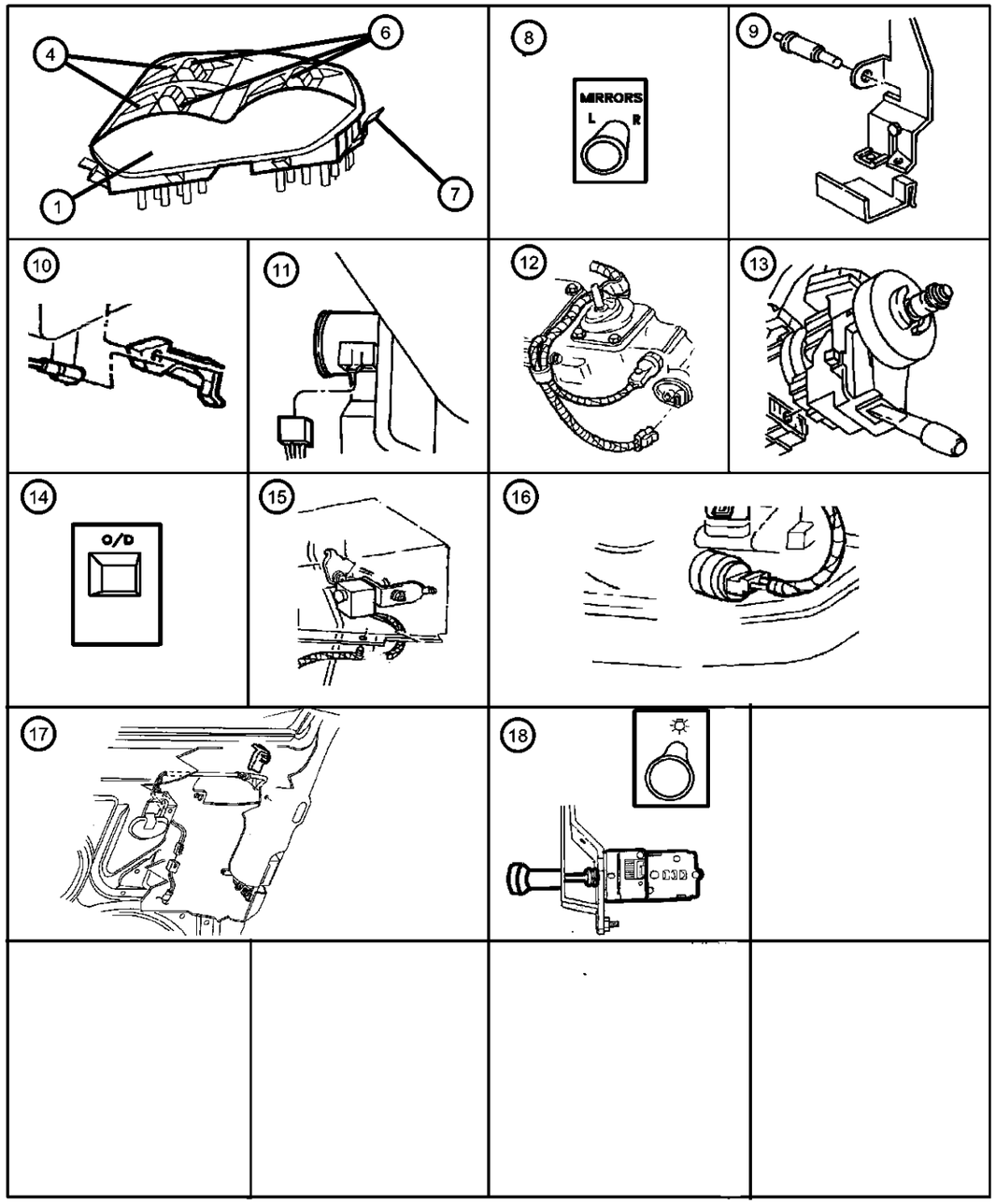

ITEM	PART NUMBER	QTY	LINE	SERIES	BODY	ENGINE	TRANS	TRIM	DESCRIPTION
	56007040	1			84				
		1			31, 61, 62				
-23	06503107	1			84				NUT, Plastic, Power Mirror Knob Attaching
-24									SWITCH, Seat
	04373848	1			31				
		1			84				
-25									SWITCH, Central Locking
	56045440AB	1			31, 61				w/Security Alarm, Right
	56045441AB	1			31, 61				w/Security Alarm, Left
	56049026AA	1			84				w/Security Alarm, Right
	56049027AA	1			84				w/Security Alarm, Left
-26	56045316AA	1			84				SWITCH, Defogger
-27									SWITCH, Remote Radio
	04685619AB	1							Right
	04685632AB	1							Left
-28	56021634	1			84				SWITCH, Door Lock

DAKOTA (AN)

SERIES	LINE	BODY	ENGINE	TRANSMISSION
L = Quad Cab L = Regular Cab L = Club Cab	1 = Dakota 2WD 5 = Dakota 4WD	31 = CLUB CAB 2-DR 6.5 FT BOX 61 = REG CAB 6.5 FT BOX 84 = CREW CAB 4-DR W.B.1	EPO = 2.5L 4 Cyl. EHO = 3.9L 6 Cyl. EMO = 5.9L 8 Cyl. EVO = 4.7L Magnum EHC = 3.9L SMPI V6 EML = 5.9L V8 MPI Engine EPE = 2.5L POWER TECH I-4 Cyl. EVA = 4.7L V8 MPI	DDC = TRANSMISSION - 5-SPEED HD MANUAL DG4 = TRANSMISSION-MULTI-SPEED AUTO, 45RFE DGK = TRANSMISSION - 4-SPD. AUTOMATIC,42RE DGT = TRANSMISSION - 4-SPD. AUTOMATIC,46RE DGO = AUTO. TRANS.

Horn & Mounting
Figure 8-911

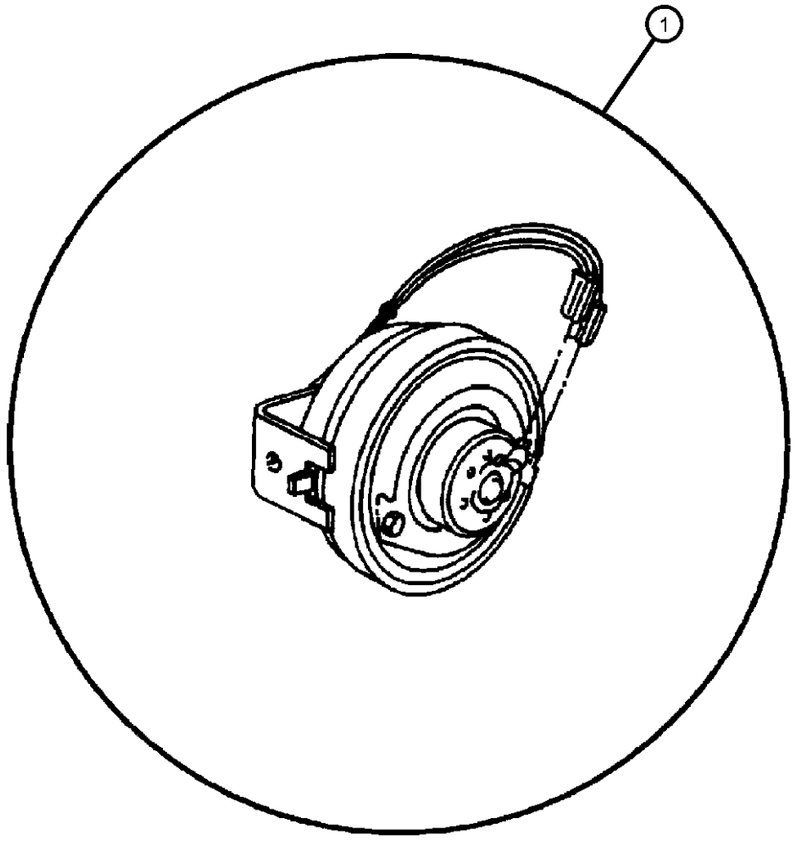

ITEM	PART NUMBER	QTY	LINE	SERIES	BODY	ENGINE	TRANS	TRIM	DESCRIPTION
1	56043073AC	1							HORN AND BRACKET, Dual
-2	06101777	6			31, 61, 84				SCREW, Hex Flange Head Tapping, M6x1.00x20.00

DAKOTA (AN)

SERIES	LINE	BODY	ENGINE	TRANSMISSION
L = Quad Cab L = Regular Cab L = Club Cab	1 = Dakota 2WD 5 = Dakota 4WD	31 = CLUB CAB 2-DR 6.5 FT BOX 61 = REG CAB 6.5 FT BOX 84 = CREW CAB 4-DR W.B.1	EPO = 2.5L 4 Cyl. EHO = 3.9L 6 Cyl. EMO = 5.9L 8 Cyl. EVO = 4.7L Magnum EHC = 3.9L SMPI V6 EML = 5.9L V8 MPI Engine EPE = 2.5L POWER TECH I-4 Cyl. EVA = 4.7L V8 MPI	DDC = TRANSMISSION - 5-SPEED HD MANUAL DG4 = TRANSMISSION-MULTI-SPEED AUTO, 45RFE DGK = TRANSMISSION - 4-SPD. AUTOMATIC,42RE DGT = TRANSMISSION - 4-SPD. AUTOMATIC,46RE DGO = AUTO. TRANS.

AR = use ase required - = Non illustrrated part

Battery Tray & Cables
Figure 8-1011

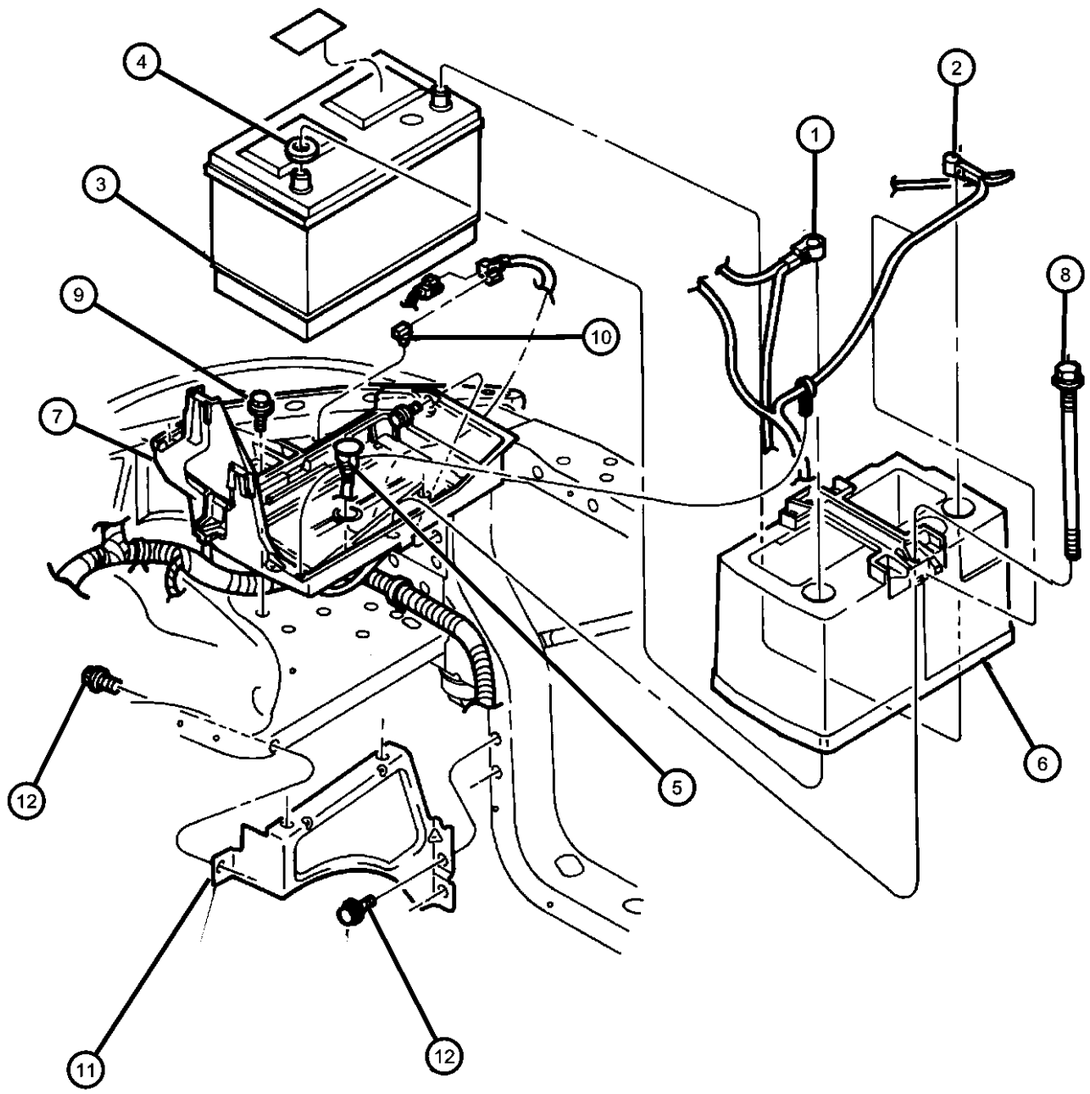

ITEM	PART NUMBER	QTY	LINE	SERIES	BODY	ENGINE	TRANS	TRIM	DESCRIPTION
EP0=2.5L Engine EH0=3.9L Engine EL0=5.2L Engine EM0=5.9L Engine DG0=Automatic Transmission DBB=Manual Transmission									
1									CABLE, Battery Positive
	56018811AB	1			31, 61, 84	EP0			
	56018818AC	1	1		84, 31, 61	EM0, EV0			Contains negative also
	56020393AC	1	5		31, 61, 84	EH0, EM0, EV0			
	56045287AD	1	1		31, 61, 84	EH0			
2									CABLE, Battery Negative
	56018719AC	1			31, 61, 84	EP0			
	56018810AC	1			31, 61, 84	EH0, EM0			
3	56018810AC	1							BATTERY, (NOT SERVICED)
4	56018810AC	1							WASHER, Battery Terminal, (NOT SERVICED)
5	56027332	1			31, 61, 84				SENSOR, Battery Temperature
6	55256138AD	1							COVER, Battery
7	55255047AD	1							TRAY, Battery
	BA027600EX								Mopar Power Pro 6
	05019837AA								Mopar Power Pro 7
	0VU01205								Repair Battery Terminal End Top Post (Ten Per Box)
	0VU01207								Repair Battery Terminal End Side Post (Ten Per Box)
8	55235142	2							STUD, Battery Hold Down
9	06503492	5							SCREW AND WASHER, Hex Head Tapping, M8x1.25x26
10	06503492	5							CLIP, Battery, (NOT SERVICED)
11	55256234	1							BRACKET, Battery Tray
12	06502282	1							SCREW, Hex Head, M8x1.25x30
-13	55255333AC	1							STRAP, Battery

DAKOTA (AN)

SERIES	LINE	BODY	ENGINE	TRANSMISSION
L = Quad Cab L = Regular Cab L = Club Cab	1 = Dakota 2WD 5 = Dakota 4WD	31 = CLUB CAB 2-DR 6.5 FT BOX 61 = REG CAB 6.5 FT BOX 84 = CREW CAB 4-DR W.B.1	EPO = 2.5L 4 Cyl. EHO = 3.9L 6 Cyl. EMO = 5.9L 8 Cyl. EVO = 4.7L Magnum EHC = 3.9L SMPI V6 EML = 5.9L V8 MPI Engine EPE = 2.5L POWER TECH I-4 Cyl. EVA = 4.7L V8 MPI	DDC = TRANSMISSION - 5-SPEED HD MANUAL DG4 = TRANSMISSION-MULTI-SPEED AUTO, 45RFE DGK = TRANSMISSION - 4-SPD. AUTOMATIC,42RE DGT = TRANSMISSION - 4-SPD. AUTOMATIC,46RE DGO = AUTO. TRANS.

Lamp - Front End
Figure 8-1131

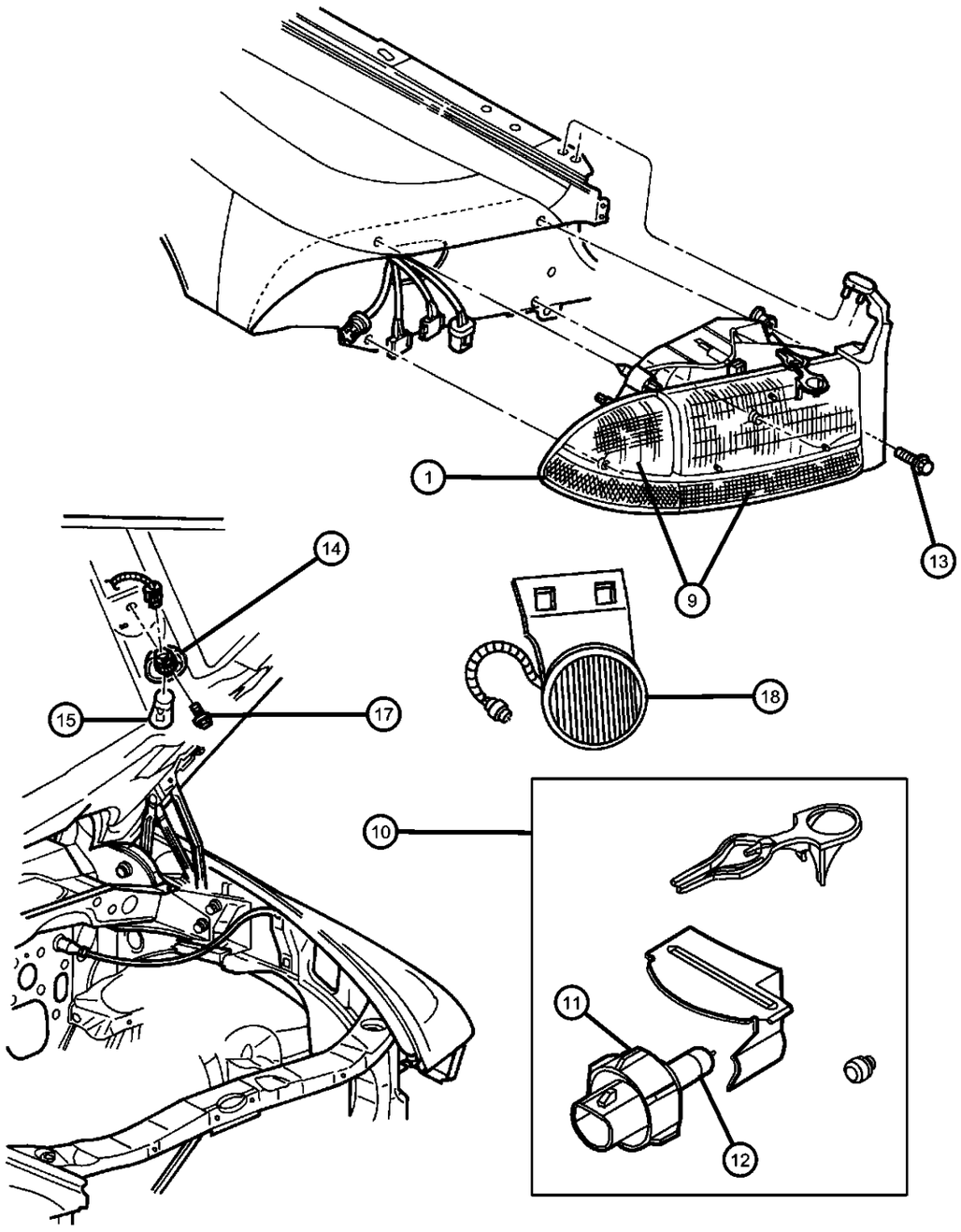

ITEM	PART NUMBER	QTY	LINE	SERIES	BODY	ENGINE	TRANS	TRIM	DESCRIPTION
1									LAMP, Headlamp Park And Turn
	55055110AF	1			31, 61, 84				Right
	55055111AF	1			31, 61, 84				Left
-2	05288612	AR							SOCKET, Side Marker
-3	04399599	1							SEAL
-4	L0000168	2			31, 61, 84				BULB, 168
-5	04882728	1							SCREW
-6	04882723	1			31, 61, 84				RETAINER, Headlamp Welt
-7									WELT, Headlamp To Grille
	04882724	1			31, 61, 84				Right
	04882725	1			31, 61, 84				Left
-8	04882727	1			31, 61, 84				RETAINER, Headlamp Receptical
9									LAMP, Front Combination
	55055172AC	1			31, 61, 84				Right
	55055173AC	1			31, 61, 84				Left
10									HEADLAMP
	55055170AD	1			31, 61, 84				Right
	55055171AD	1			31, 61, 84				Left
11	55077046AA	1			31, 61, 84				RETAINER, Headlamp Bulb
12	L0009007	1							BULB, Headlamp
13	06504289	6							SCREW, Hex Head
14	56021441	1			31, 61, 84				LAMP, Underhood
15	L0000561	1							BULB, 561
-16	04897446AA	1			31, 61, 84				LENS, Lamp Module
17	04897446AA	1							SCREW, Hex Flange Head, M6.3x1.81x16, (NOT SERVICED)
18									LAMP, Fog
	55077266AA	1			31, 61, 84				Right
	55077267AA	1			31, 61				Left
		1			84				Left
-19									BULB, 899
	05015448AA	1			31, 61				Foglamp
		1			84				Foglamp

DAKOTA (AN)

SERIES	LINE	BODY	ENGINE	TRANSMISSION
L = Quad Cab L = Regular Cab L = Club Cab	1 = Dakota 2WD 5 = Dakota 4WD	31 = CLUB CAB 2-DR 6.5 FT BOX 61 = REG CAB 6.5 FT BOX 84 = CREW CAB 4-DR W.B.1	EPO = 2.5L 4 Cyl. EHO = 3.9L 6 Cyl. EMO = 5.9L 8 Cyl. EVO = 4.7L Magnum EHC = 3.9L SMPI V6 EML = 5.9L V8 MPI Engine EPE = 2.5L POWER TECH I-4 Cyl. EVA = 4.7L V8 MPI	DDC = TRANSMISSION - 5-SPEED HD MANUAL DG4 = TRANSMISSION-MULTI-SPEED AUTO, 45RFE DGK = TRANSMISSION - 4-SPD. AUTOMATIC,42RE DGT = TRANSMISSION - 4-SPD. AUTOMATIC,46RE DGO = AUTO. TRANS.

AR = use ase required - = Non illustrrated part

Lamp - Rear End
Figure 8-1141

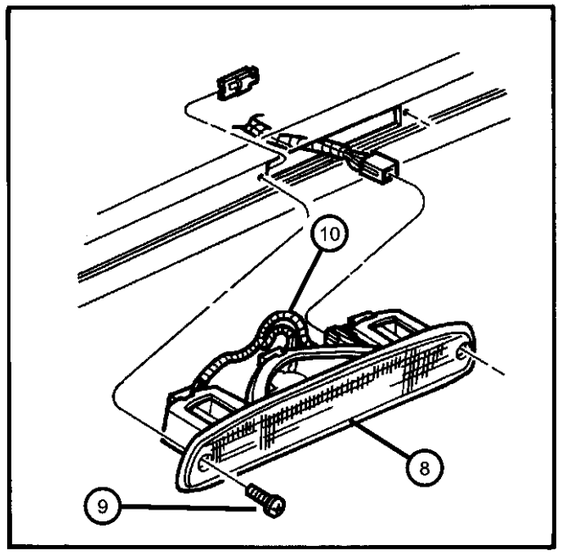

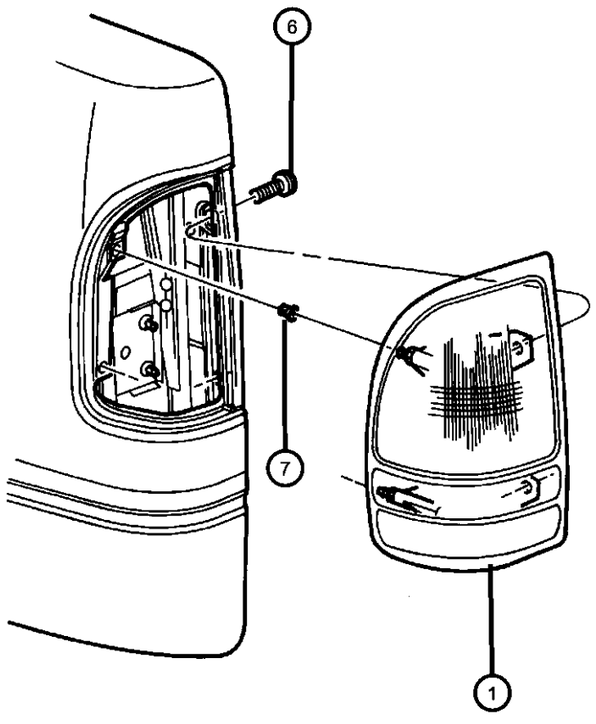

ITEM	PART NUMBER	QTY	LINE	SERIES	BODY	ENGINE	TRANS	TRIM	DESCRIPTION
1									LAMP, Tail Stop Backup
	55055112	1							Right
	55055113	1							Left
-2	04523105	1							SOCKET, Cornering Lamp, Backup lamp
-3	04523108	1							SOCKET, Park, Turn, and Side Lamp, Tail Lamp Socket
-4									SEAL
	04799346	1	5		31, 61, 84		DG4		
		1	1		31, 61, 84		DG4		
-5	06032031	2			31, 61, 84				NUT, Spring, .19-16, Tail Lamp Mounting
6	06035455	4			31, 61, 84				SCREW, Tapping, .19-16x.625
7	06504072	4							CLIP, Open Round
8									LAMP, High Mounted Stop
	55056202AB	1							w/o Cargo Lamp
	55056203AB	1							w/Cargo Lamp
9	55056203AB	1							SCREW, Oval Head, .164-18x.750 HD #6, (NOT SERVICED),
10									WIRING, High Mounted Stop Lamp
	55055257	1			31, 61, 84				w/o Cargo Lamp
	55055258	1			31, 61, 84				w/Cargo Lamp
-11	L000921E	1			31, 61, 84				BULB, 921
-12									LAMP, Licence Plate
	55055292	1							w/o Chrome Step Bumper
	55055294	1							w/Chrome Step Bumper
-13	55055294	1							LAMP, License Plate, (NOT REQUIRED),
-14	56020624	1							WIRING, License Lamp

DAKOTA (AN)

SERIES	LINE	BODY	ENGINE	TRANSMISSION
L = Quad Cab	1 = Dakota 2WD	31 = CLUB CAB 2-DR 6.5 FT BOX	EPO = 2.5L 4 Cyl.	DDC = TRANSMISSION - 5-SPEED HD MANUAL
L = Regular Cab	5 = Dakota 4WD	61 = REG CAB 6.5 FT BOX	EHO = 3.9L 6 Cyl.	DG4 = TRANSMISSION-MULTI-SPEED AUTO, 45RFE
L = Club Cab		84 = CREW CAB 4-DR W.B.1	EMO = 5.9L 8 Cyl.	DGK = TRANSMISSION - 4-SPD. AUTOMATIC,42RE
			EVO = 4.7L Magnum	DGT = TRANSMISSION - 4-SPD. AUTOMATIC,46RE
			EHC = 3.9L SMPI V6	DGO = AUTO. TRANS.
			EML = 5.9L V8 MPI Engine	
			EPE = 2.5L POWER TECH I-4 Cyl.	
			EVA = 4.7L V8 MPI	

Lamp - Dome - Courtesy - Reading
Figure 8-1151

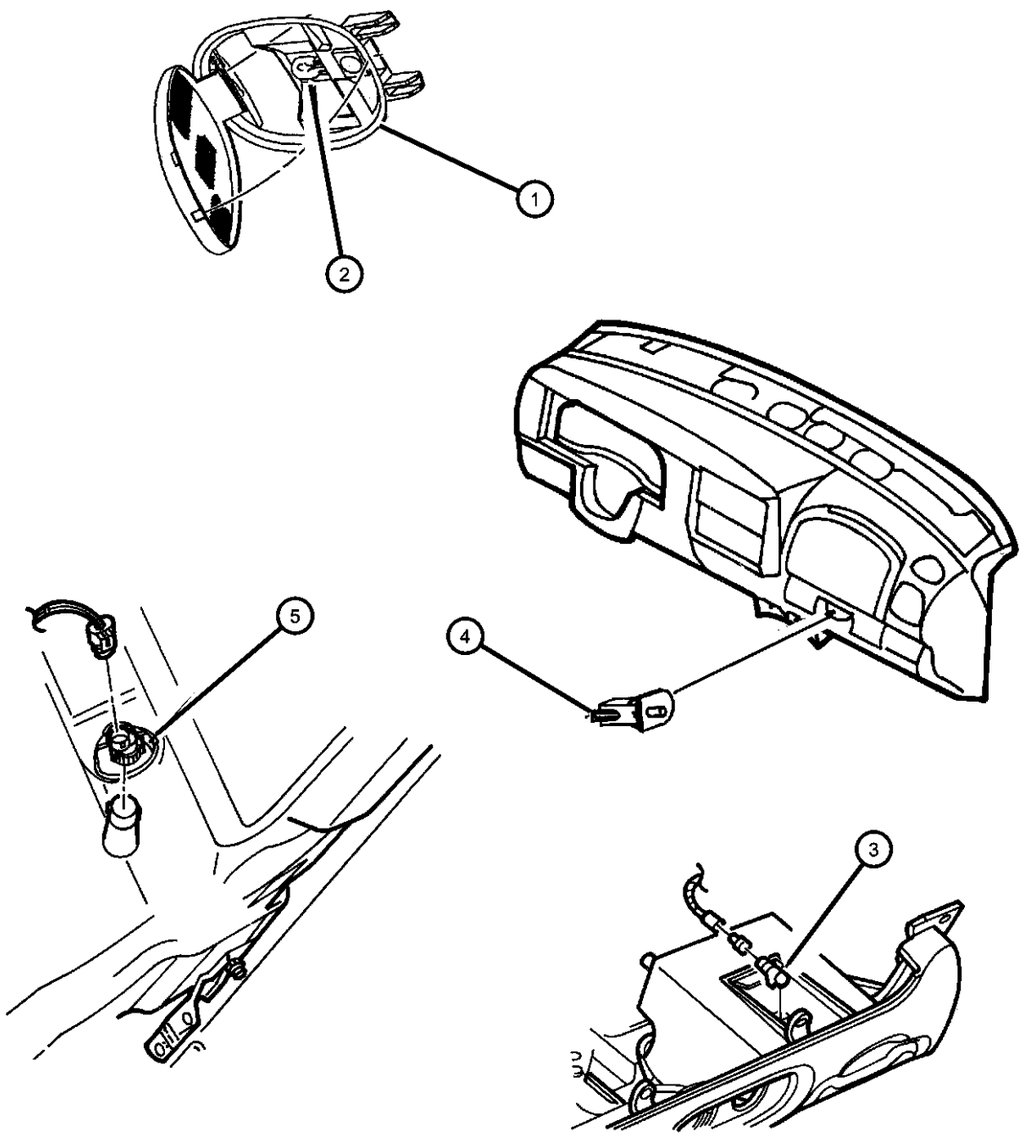

ITEM	PART NUMBER	QTY	LINE	SERIES	BODY	ENGINE	TRANS	TRIM	DESCRIPTION
1									LAMP, Dome
	0JV76TL2	1			31, 61, 62				Front (Beige)
	5FW60TL2AB	1			31, 84				Map/Dome Reading (Beige)
2	00154762	1			31, 61				BULB, 579
3	05269360	1			31, 61, 84				HOOD, Ash Receiver Lamp, Hood Assembly
4	04565022	1			31, 61, 84				SWITCH AND LAMP, Glove Box
5	56021441	1			31, 61, 84				LAMP, Underhood
-6	56021441	1							SHIELD, Underhood Lamp, (NOT SERVICED)
-7	56045192AB	1			31, 61, 84				HOUSING, Dome and Reading Lamp

DAKOTA (AN)

SERIES	LINE	BODY	ENGINE	TRANSMISSION
L = Quad Cab L = Regular Cab L = Club Cab	1 = Dakota 2WD 5 = Dakota 4WD	31 = CLUB CAB 2-DR 6.5 FT BOX 61 = REG CAB 6.5 FT BOX 84 = CREW CAB 4-DR W.B.1	EPO = 2.5L 4 Cyl. EHO = 3.9L 6 Cyl. EMO = 5.9L 8 Cyl. EVO = 4.7L Magnum EHC = 3.9L SMPI V6 EML = 5.9L V8 MPI Engine EPE = 2.5L POWER TECH I-4 Cyl. EVA = 4.7L V8 MPI	DDC = TRANSMISSION - 5-SPEED HD MANUAL DG4 = TRANSMISSION-MULTI-SPEED AUTO, 45RFE DGK = TRANSMISSION - 4-SPD. AUTOMATIC,42RE DGT = TRANSMISSION - 4-SPD. AUTOMATIC,46RE DGO = AUTO. TRANS.

Bulbs & Sockets
Figure 8-1196

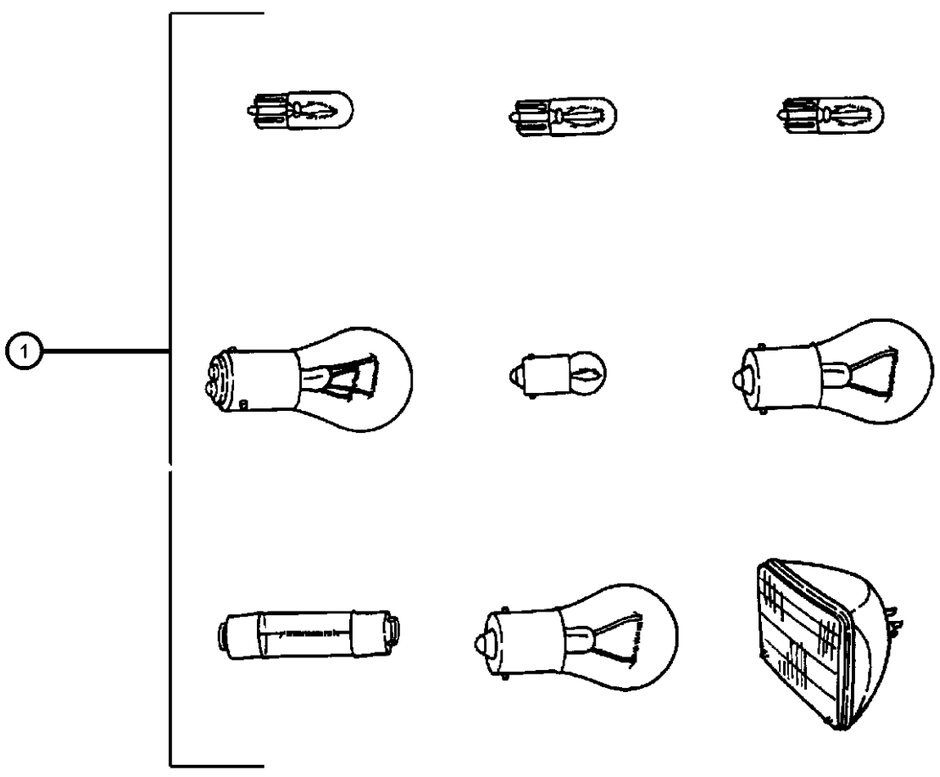

ITEM	PART NUMBER	QTY	LINE	SERIES	BODY	ENGINE	TRANS	TRIM	DESCRIPTION
1	L0003157	1			31, 61, 84				BULB, 3157, Tail lamp/back up lamp
-2	L0000168	2			31, 61, 84				BULB, 168
-3	09417561	1			31, 61, 84				BULB, 161
-4	00154762	1			31, 61, 62				BULB, 579
-5	L000921E	1			31, 61, 84				BULB, 921
-6	L0000074	1							BULB, 74
-7	L000PC74	1							BULB, PC74
-8	04523108	1							SOCKET, Park, Turn, and Side Lamp
-9									BULB AND SOCKET, Indicator Lamp
	05015731AA	1							Bulb is found in the back of Headlamp switch #'s 56021675AB, 56021675AC, 56021676AB & 56021676AC (Illuminates the foglamp Indicator when the fog lights are on.)
	05015732AA	1							Bulb is found in the back of Headlamp switch #'s 56021673, 56021673AB, 56021674 & 56021674AB (Illuminates the headlamp switch when theinstrumentation lights are on.)

DAKOTA (AN)

SERIES	LINE	BODY	ENGINE	TRANSMISSION
L = Quad Cab	1 = Dakota 2WD	31 = CLUB CAB 2-DR 6.5 FT BOX	EPO = 2.5L 4 Cyl.	DDC = TRANSMISSION - 5-SPEED HD MANUAL
L = Regular Cab	5 = Dakota 4WD	61 = REG CAB 6.5 FT BOX	EHO = 3.9L 6 Cyl.	DG4 = TRANSMISSION-MULTI-SPEED AUTO, 45RFE
L = Club Cab		84 = CREW CAB 4-DR W.B.1	EMO = 5.9L 8 Cyl.	DGK = TRANSMISSION - 4-SPD. AUTOMATIC,42RE
			EVO = 4.7L Magnum	DGT = TRANSMISSION - 4-SPD. AUTOMATIC,46RE
			EHC = 3.9L SMPI V6	DGO = AUTO. TRANS.
			EML = 5.9L V8 MPI Engine	
			EPE = 2.5L POWER TECH I-4 Cyl.	
			EVA = 4.7L V8 MPI	

Wiring - Engine
Figure 8-1211

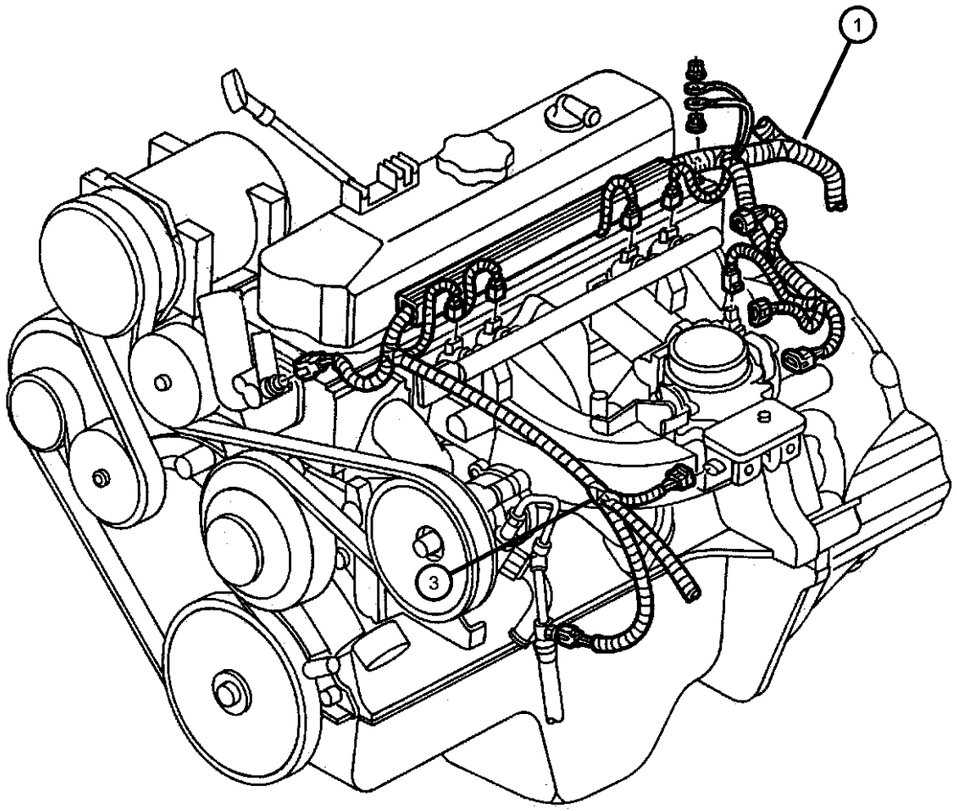

ITEM	PART NUMBER	QTY	LINE	SERIES	BODY	ENGINE	TRANS	TRIM	DESCRIPTION
EP0=2.5L Engine EH0=3.9L Engine EM0=5.9L Engine EV0=4.7L Engine DG0=Automatic Transmission DBB=Manual Transmission									
1									WIRING, Engine
	56045108AC	1				EV0	DBB		Federal or Leaded Fuel Emission
	56045109AC	1				EV0	DG0		Federal or Leaded Fuel Emission
	56045255AC	1				EV0	DBB		California Emission
	56045256AC	1				EV0	DG0		California Emission
	56045278AA	1			31, 61, 84	EM0	DG0		
	56045404AC	1				EP0	DBB		
	56045405AA	1			31, 61, 84	EH0	DBB		
	56045406AA	1			31, 61, 84	EH0	DG0		
-2	56020238AB	1			31, 61, 84				WIRING, Underhood Lamp
3	00120522	2	1		31, 61	EP0			CLIP, Wrap Around
-4	04641780	1							STRAP, Tie
-5									WIRING, Oxygen Sensor Jumper
	56045483AC	1	1			EH0, EM0, EV0			With Federal / U. S. 50 State Emissions
		1	1			EH0, EM0			With California / U. S. 50 State Emissions
	56049009AB	1				EP0			With California / Federal Emissions

DAKOTA (AN)

SERIES	LINE	BODY	ENGINE	TRANSMISSION
L = Quad Cab L = Regular Cab L = Club Cab	1 = Dakota 2WD 5 = Dakota 4WD	31 = CLUB CAB 2-DR 6.5 FT BOX 61 = REG CAB 6.5 FT BOX 84 = CREW CAB 4-DR W.B.1	EPO = 2.5L 4 Cyl. EHO = 3.9L 6 Cyl. EMO = 5.9L 8 Cyl. EVO = 4.7L Magnum EHC = 3.9L SMPI V6 EML = 5.9L V8 MPI Engine EPE = 2.5L POWER TECH I-4 Cyl. EVA = 4.7L V8 MPI	DDC = TRANSMISSION - 5-SPEED HD MANUAL DG4 = TRANSMISSION-MULTI-SPEED AUTO, 45RFE DGK = TRANSMISSION - 4-SPD. AUTOMATIC,42RE DGT = TRANSMISSION - 4-SPD. AUTOMATIC,46RE DGO = AUTO. TRANS.

Wiring - Headlamp / Dash
Figure 8-1311

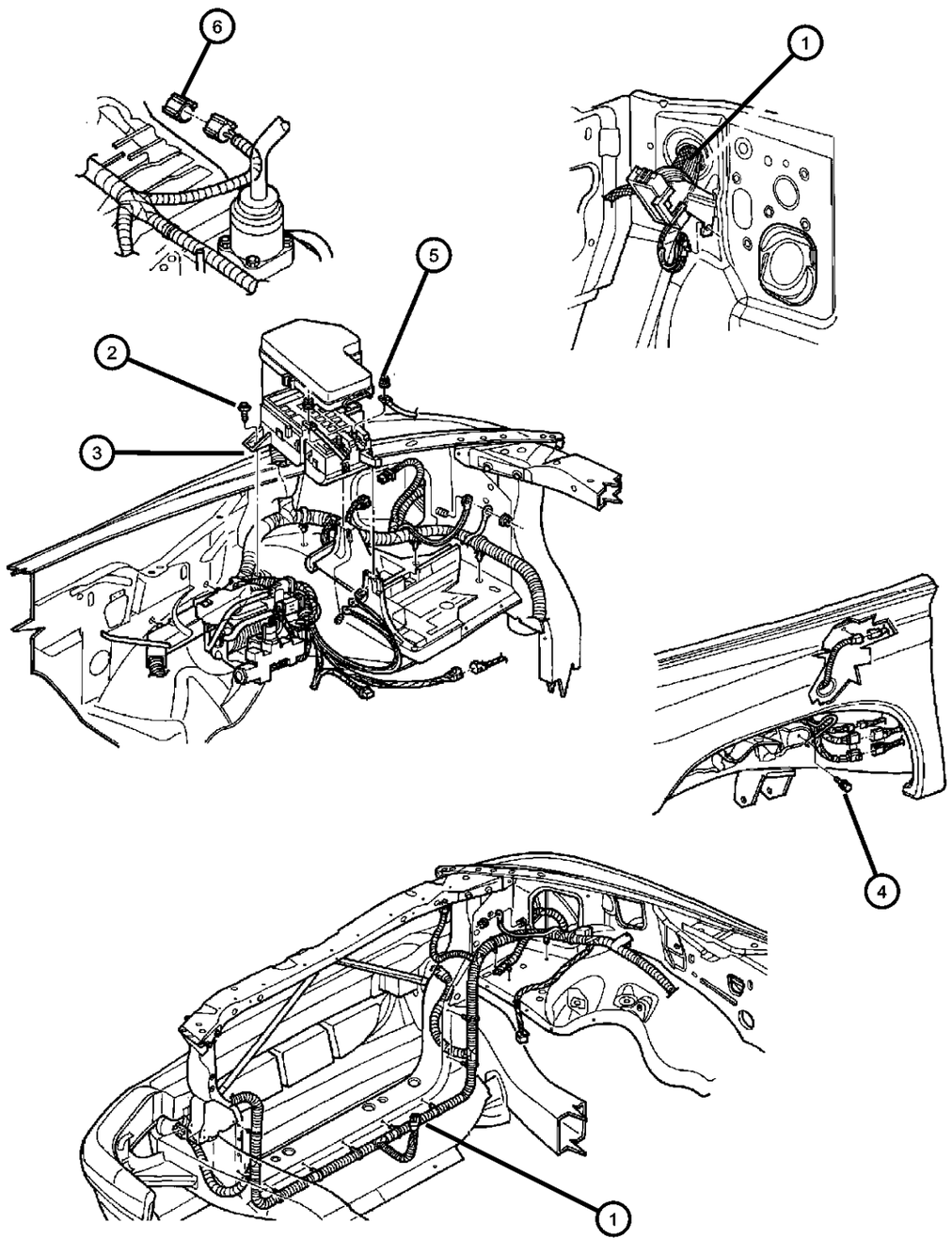

ITEM	PART NUMBER	QTY	LINE	SERIES	BODY	ENGINE	TRANS	TRIM	DESCRIPTION
EP0=2.5L Engine EH0=3.9L Engine EL0=5.2L Engine EM0=5.9L Engine DG0=Automatic Transmission DBB=Manual Transmission									
1									WIRING, Headlamp to Dash
	56045213AA	1			31, 61, 84	EV0			Up to 12/06/99 (w/Power Brakes & w/o Trailer Tow) Federal/Leaded Fuel Emissions
	56045213AC	1				EV0			12/06/99 & After (w/Power Brakes & w/o Trailer Tow) Federal/Leaded Fuel Emission
	56045217AA	1			31, 61, 84	EV0			Up to 12/06/99 (w/ABS) Federal/Leaded Fuel Emissions
		1			31, 61, 84	EV0			Up to 12/06/99 (w/Power Brakes & Trailer Tow) Federal/Leaded Fuel Emissions
	56045217AC	1				EV0			12/06/99 & After (w/ABS) Federal/Leaded Fuel Emission
		1				EV0			12/06/99 & After (w/Power Brakes & Trailer Tow) Federal/Leaded Fuel Emissions
	56045218AA	1			31, 61, 84	EV0			Up to 12/06/99 (Canada)
	56045218AC	1				EV0			12/06/99 & After (Canada)
	56045284AA	1			31, 61, 84	EV0			Up to 12/06/99 (California Emissions)
	56045284AC	1				EV0			12/06/99 & After (California Emissions)
	56045413AA	1			31, 61, 84	EP0			Up to 12/06/99 (USA)
	56045414AA	1			31, 61, 84	EP0			Up to 12/06/99 (Canada)
	56045416AA	1			31, 61, 84	EH0, EM0			Up to 12/06/99 (w/Power Brakes & w/o Trailer Tow)
	56045418AA	1			31, 61, 84	EH0, EM0			Up to 12/06/99 (w/ABS)
		1			31, 61, 84	EH0, EM0			Up to 12/06/99 (w/ABS or Power Brakes & w/Trailer Tow)
	56045418AC	1				EH0, EM0			12/06/99 & After (w/ABS)
		1				EH0, EM0			12/06/99 & After (w/ABS or Power Brakes & w/Trailer Tow)
	56045419AA	1				EH0			Up to 12/06/99 (w/Power Brakes & Trailer Tow)
		1				EH0			Up to 12/06/99 (w/ABS)

DAKOTA (AN)

SERIES	LINE	BODY	ENGINE	TRANSMISSION
L = Quad Cab L = Regular Cab L = Club Cab	1 = Dakota 2WD 5 = Dakota 4WD	31 = CLUB CAB 2-DR 6.5 FT BOX 61 = REG CAB 6.5 FT BOX 84 = CREW CAB 4-DR W.B.1	EPO = 2.5L 4 Cyl. EHO = 3.9L 6 Cyl. EMO = 5.9L 8 Cyl. EVO = 4.7L Magnum EHC = 3.9L SMPI V6 EML = 5.9L V8 MPI Engine EPE = 2.5L POWER TECH I-4 Cyl. EVA = 4.7L V8 MPI	DDC = TRANSMISSION - 5-SPEED HD MANUAL DG4 = TRANSMISSION-MULTI-SPEED AUTO, 45RFE DGK = TRANSMISSION - 4-SPD. AUTOMATIC,42RE DGT = TRANSMISSION - 4-SPD. AUTOMATIC,46RE DGO = AUTO. TRANS.

Wiring - Headlamp / Dash
Figure 8-1311

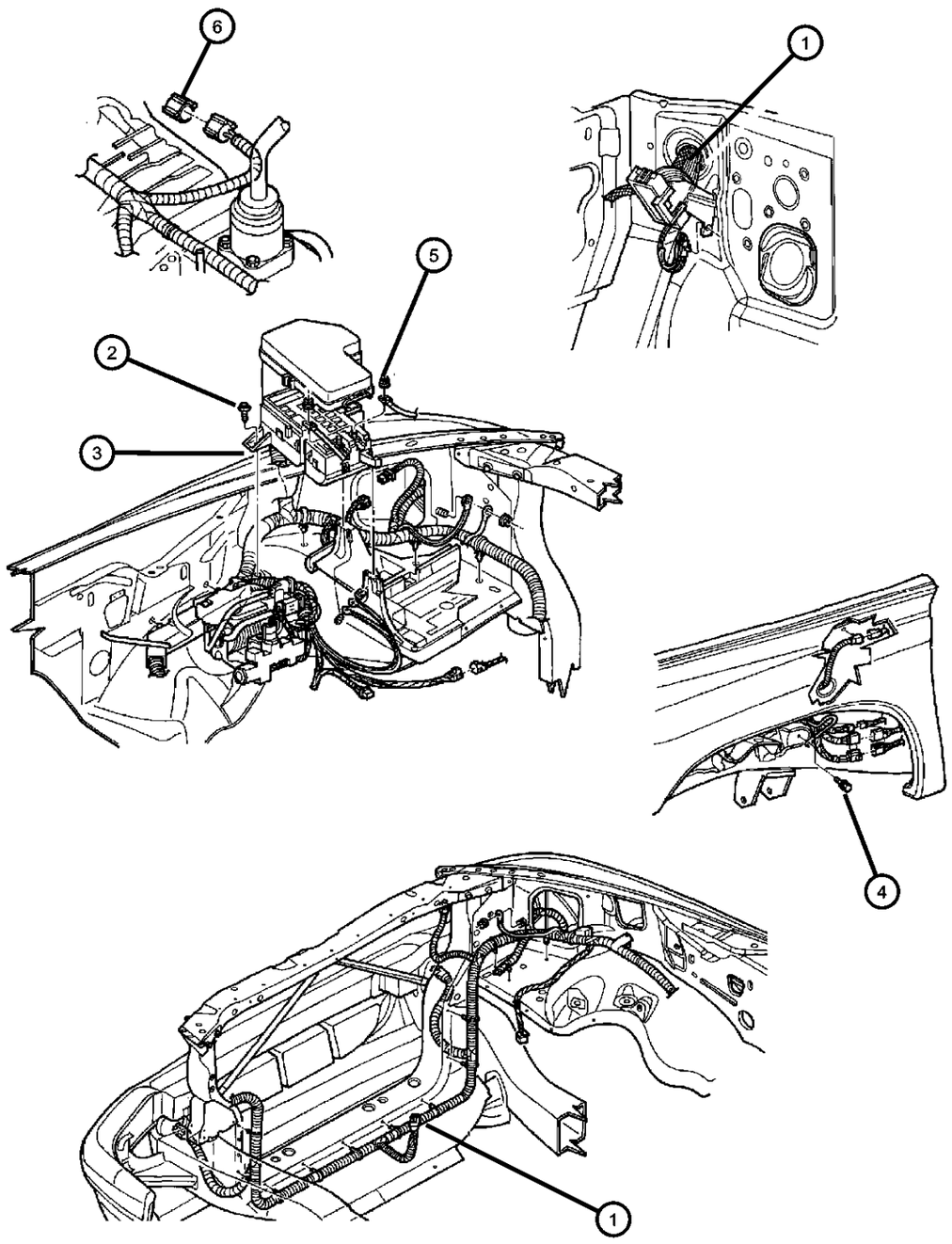

ITEM	PART NUMBER	QTY	LINE	SERIES	BODY	ENGINE	TRANS	TRIM	DESCRIPTION
	56045432AA	1			31, 61, 84	EH0, EM0			Up to 12/06/99 (Canada)
	56045432AC	1				EH0, EM0			12/06/99 & After (Canada)
2	06101777	6			31, 61, 84				SCREW, Hex Flange Head Tapping, M6x1.00x20.00
3	06101809	1			31, 61, 84				NUT AND WASHER, Hex, M8x1.25
4	06101809	1							SCREW AND WASHER, Hex Head Tapping, M8x1.25x26, (NOT SERVICED)
5	06101802	2							NUT AND WASHER, M6x1.00
6	04688733	1							INSULATOR, 4 Way Female
-7									COVER, Power Distribution Center
	56021237	1							Lower
	56045152AB	AR			31, 61, 84				Upper, Upper
-8	06101757	1							FUSIBLE LINK, 06101757

DAKOTA (AN)

SERIES	LINE	BODY	ENGINE	TRANSMISSION
L = Quad Cab	1 = Dakota 2WD	31 = CLUB CAB 2-DR 6.5 FT BOX	EPO = 2.5L 4 Cyl.	DDC = TRANSMISSION - 5-SPEED HD MANUAL
L = Regular Cab	5 = Dakota 4WD	61 = REG CAB 6.5 FT BOX	EHO = 3.9L 6 Cyl.	DG4 = TRANSMISSION-MULTI-SPEED AUTO, 45RFE
L = Club Cab		84 = CREW CAB 4-DR W.B.1	EMO = 5.9L 8 Cyl.	DGK = TRANSMISSION - 4-SPD. AUTOMATIC,42RE
			EVO = 4.7L Magnum	DGT = TRANSMISSION - 4-SPD. AUTOMATIC,46RE
			EHC = 3.9L SMPI V6	DGO = AUTO. TRANS.
			EML = 5.9L V8 MPI Engine	
			EPE = 2.5L POWER TECH I-4 Cyl.	
			EVA = 4.7L V8 MPI	

AR = use ase required - = Non illustrrated part

Wiring - Instrument Panel
Figure 8-1411

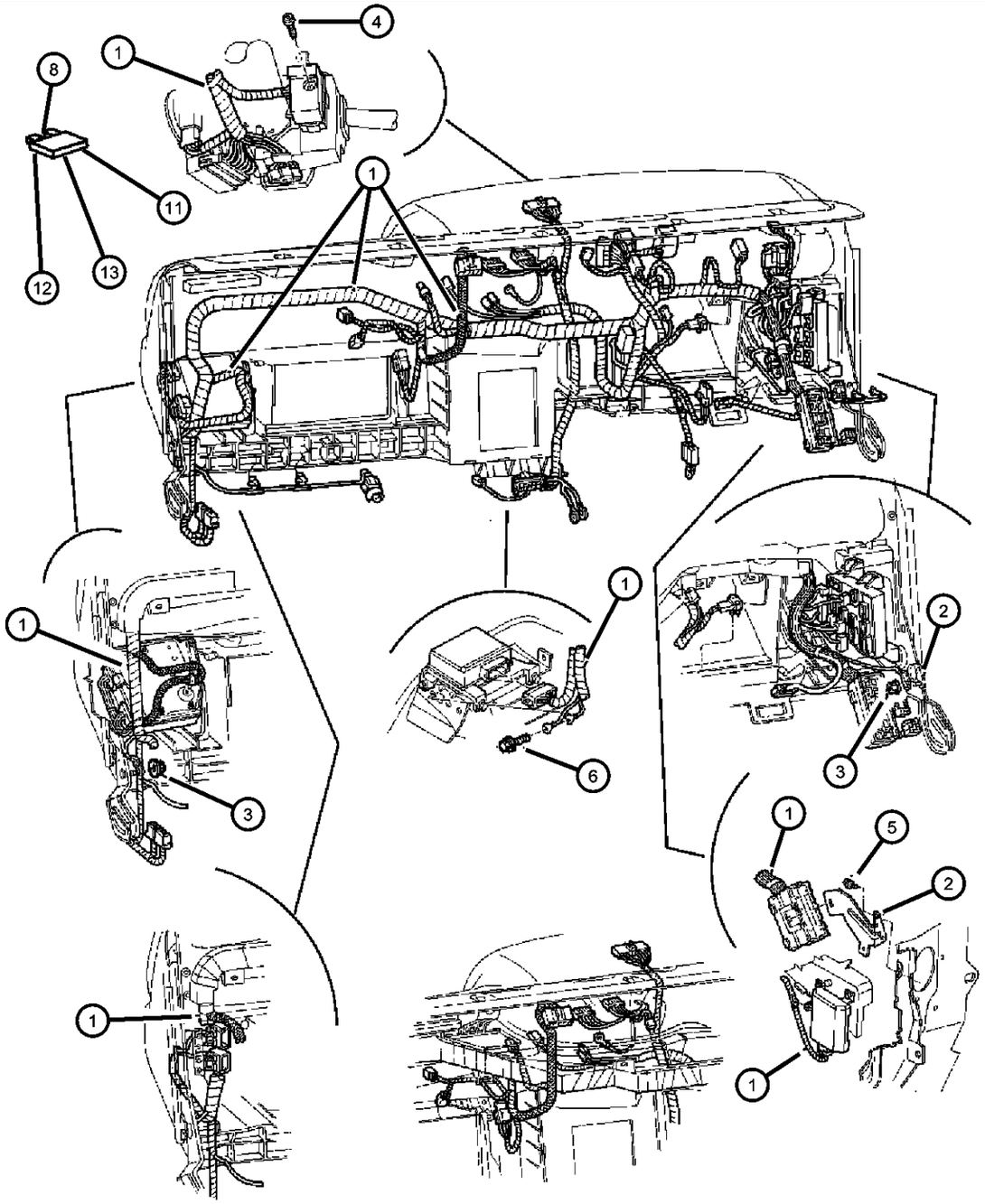

ITEM	PART NUMBER	QTY	LINE	SERIES	BODY	ENGINE	TRANS	TRIM	DESCRIPTION
1									WIRING, Instrument Panel
	56021781AE	1			31, 61				Up to 10/04/99 (Base Model)
	56021781AH	1			31, 61				10/04/99 & After (Base Model)
	56021782AE	1			31, 61				Up to 10/04/99 (w/6 Way Power Seats & Foglamp)
	56021782AH	1			31, 61				10/04/99 & After (w/6 Way Power Seats & Foglamp)
	56021783AE	1			31, 61				Up to 10/04/99 (Base Model w/Light Group)
	56021783AH	1			31, 61				10/04/99 & After (Base Model w/Light Group)
	56021784AG	1			31, 61				Up to 10/04/99 (w/Infinity Speaker System, Console Overhaed Type II & w/Power door Locks)
	56021785AE	1			31, 61				Up to 10/04/99 (w/o Infinity Speaker System, Console Overhaed Type II & w/Power door Locks)
	56021786AE	1			31, 61				Up to 10/04/99 (w/Infinity Speaker System, w/o Console Overhaed Type II & w/o Power door Locks)
	56021786AH	1			31, 61				10/04/99 & After (w/Infinity Speaker System, w/o Console Overhaed Type II & w/o Power door Locks)
	56045250AC	1			84				Up to 10/04/99 (Base Model)
	56045250AF	1			84				10/04/99 & After (Base Model)
	56045251AC	1			84				Up to 10/04/99 (w/6 Way Power Seats, Foglamp & Heated Rear Window)
	56045251AF	1			84				10/04/99 & After (w/6 Way Power Seats, Foglamp & Heated Rear Window)
	56045252AC	1			84				Up to 10/04/99 (w/Infinity Speaker System, w/o Console Overhaed Type II & w/o Power door Locks)
	56045252AF	1			84				10/04/99 & After (w/Infinity Speaker System, w/o Console Overhaed Type II & w/o Power door Locks)

DAKOTA (AN)

SERIES	LINE	BODY	ENGINE	TRANSMISSION
L = Quad Cab L = Regular Cab L = Club Cab	1 = Dakota 2WD 5 = Dakota 4WD	31 = CLUB CAB 2-DR 6.5 FT BOX 61 = REG CAB 6.5 FT BOX 84 = CREW CAB 4-DR W.B.1	EPO = 2.5L 4 Cyl. EHO = 3.9L 6 Cyl. EMO = 5.9L 8 Cyl. EVO = 4.7L Magnum EHC = 3.9L SMPI V6 EML = 5.9L V8 MPI Engine EPE = 2.5L POWER TECH I-4 Cyl. EVA = 4.7L V8 MPI	DDC = TRANSMISSION - 5-SPEED HD MANUAL DG4 = TRANSMISSION-MULTI-SPEED AUTO, 45RFE DGK = TRANSMISSION - 4-SPD. AUTOMATIC,42RE DGT = TRANSMISSION - 4-SPD. AUTOMATIC,46RE DGO = AUTO. TRANS.

AR = use ase required - = Non illustrrated part

Wiring - Instrument Panel
Figure 8-1411

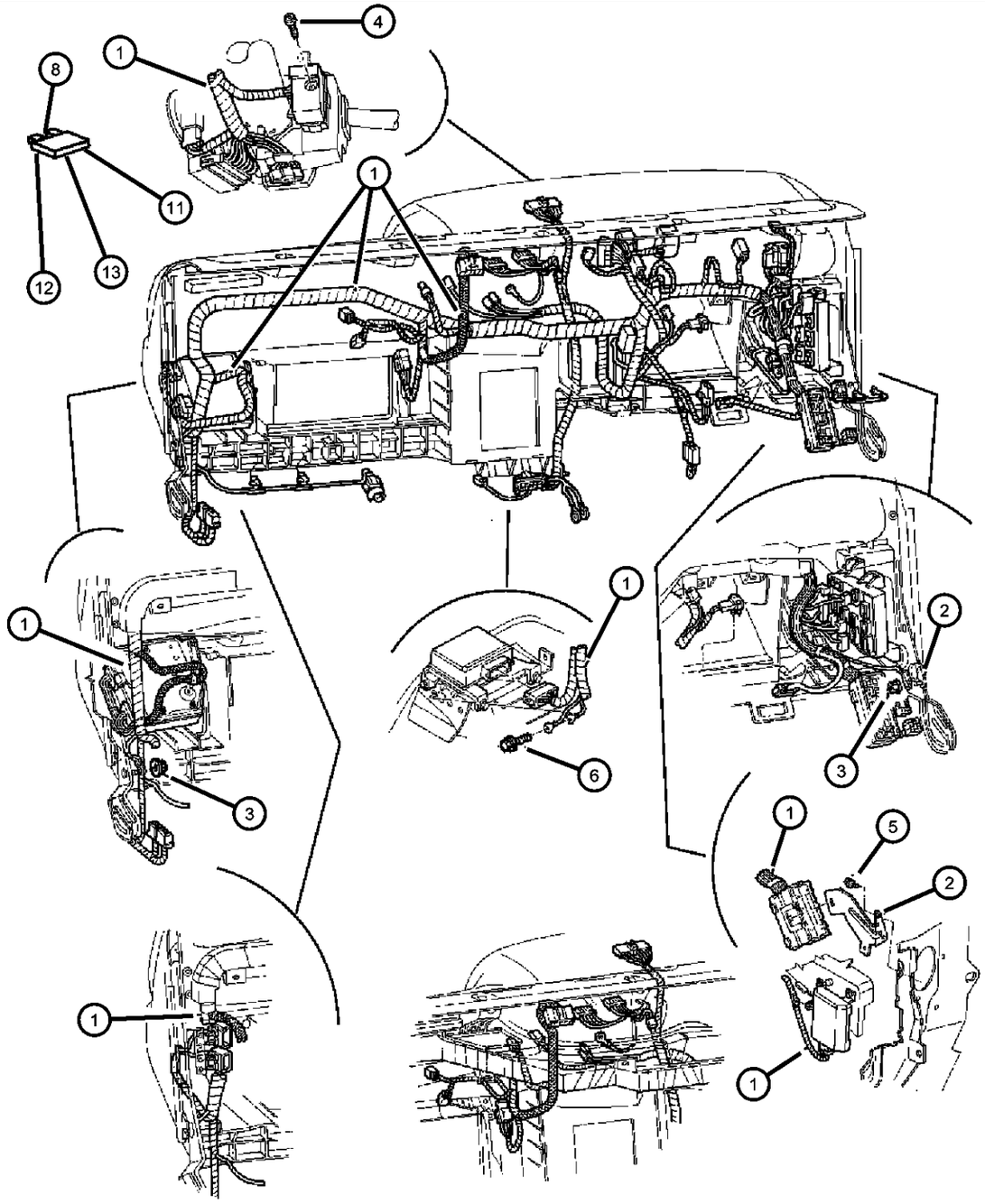

ITEM	PART NUMBER	QTY	LINE	SERIES	BODY	ENGINE	TRANS	TRIM	DESCRIPTION
	56045253AC	1			84				Up to 10/04/99 (w/o Infinity Speaker System, Console Overhaed Type II & w/Power door Locks
	56045254AC	1			84				Up to 10/04/99 (w/Audio Control Steering Wheel)
	56045328AC	1			84				Up to 10/04/99 (w/Infinity Speaker System, w/Console Overhaed Type II & w/Power door Locks)
	56045488AD	1			31, 61				Up to 10/04/99 (w/Audio Control Steering Wheel)
2	56020131	1			31, 61, 84				BRACKET, Instrument Panel
3	06101802	2							NUT AND WASHER, M6x1.00, Harness Ground
4	06034625	1							SCREW, Hex Flange Head, .190-24X1.875, Switch Mounting
5	06034625	1							SCREW, Tapping, .164-18x.625, (NOT SERVICED)
6	00154552	1			31, 61, 84				SCREW, Hex Head, .190-16x.625, Airbag and Radio Ground
-7									JUNCTION BLOCK, Relay
	56021396AE	1			84				
		1			31, 61				
8	000ATM20	1							FUSE, Mini, 20 AMP, Yellow
-9	56021543	1			31, 61, 84				BREAKER, Circuit
-10	56021915AA	1			31, 61, 84				FLASHER
11									FUSE, Standard, 15 AMP, Light Blue
	06101136	1			84				
		1			31, 61, 62				
12	000ATM15	1							FUSE, Mini, 15 AMP, Light Blue
13									FUSE, Mini, 10 AMP, Red
	06101486	7			84				
		7			31, 61, 62				
-14	56045164AC	1							WIRING, Steering Wheel
-15	05018395AA	1							WIRING, 4 Wheel Drive Illumination

DAKOTA (AN)

SERIES	LINE	BODY	ENGINE	TRANSMISSION
L = Quad Cab	1 = Dakota 2WD	31 = CLUB CAB 2-DR 6.5 FT BOX	EPO = 2.5L 4 Cyl.	DDC = TRANSMISSION - 5-SPEED HD MANUAL
L = Regular Cab	5 = Dakota 4WD	61 = REG CAB 6.5 FT BOX	EHO = 3.9L 6 Cyl.	DG4 = TRANSMISSION-MULTI-SPEED AUTO, 45RFE
L = Club Cab		84 = CREW CAB 4-DR W.B.1	EMO = 5.9L 8 Cyl.	DGK = TRANSMISSION - 4-SPD. AUTOMATIC,42RE
			EVO = 4.7L Magnum	DGT = TRANSMISSION - 4-SPD. AUTOMATIC,46RE
			EHC = 3.9L SMPI V6	DGO = AUTO. TRANS.
			EML = 5.9L V8 MPI Engine	
			EPE = 2.5L POWER TECH I-4 Cyl.	
			EVA = 4.7L V8 MPI	

Wiring - Body & Accessory
Figure 8-1511

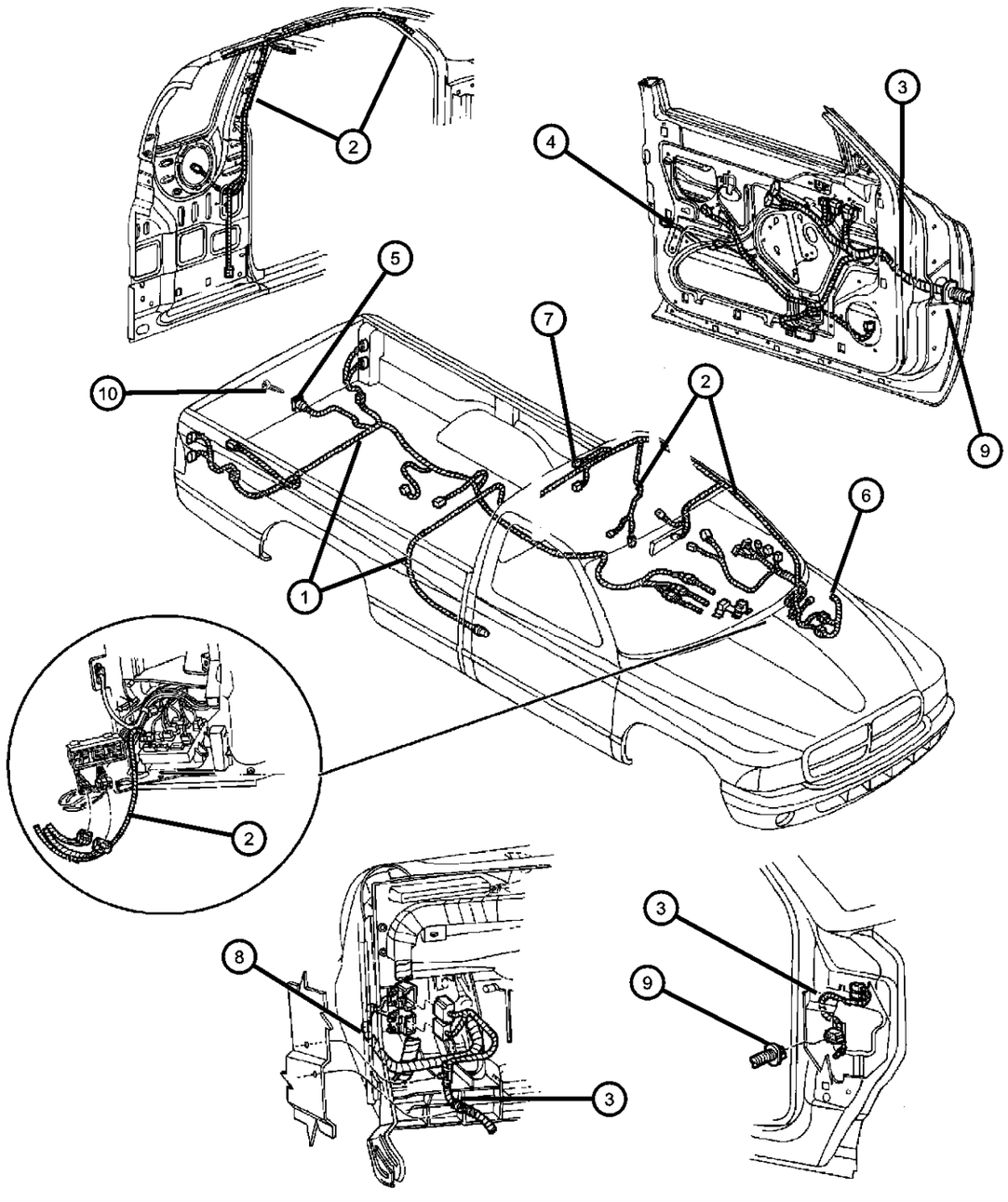

ITEM	PART NUMBER	QTY	LINE	SERIES	BODY	ENGINE	TRANS	TRIM	DESCRIPTION
1									WIRING, Chassis
	56019412AD	1			31				w/o Trailer Tow
		1			84				w/o Trailer Tow
	56019416AD	1			31				w/Trailer Tow
		1			84				w/Trailer Tow
	56021124AD	1			61				w/Trailer Tow
	56021125AD	1			61				w/o Trailer Tow
2									WIRING, Body
	56045268AD	1			84				Base Model
	56045270AD	1			84				w/Overhead Console Type I, 6 Way Power Seats, Heated Rear Window & w/o Power Windows
	56045271AD	1			84				w/Overhead Console Type I, 6 Way Power Seats, Heated Rear Window & w/Power Windows
	56045272AD	1			84				w/Overhead Console Type I, Power Windows, w/o 6 Way Power Seats & w/o Heated Rear Window
	56045273AD	1			84				w/Overhead Console Type II
	56045334AC	1			31				Base Model
	56045335AC	1			31				w/Overhead Console Type I, 6 Way Power Seats & w/o Power Windows
		1			31				w/6 Way Power Seats, w/o Power Windows & w/o Overhead Console
	56045336AC	1			31				w/Overhead Console Type I, w/Power Windows & w/o 6 Way Power Seats
		1			31				w/Power Windows, w/o Overhead Console & w/o 6 Way Power Seats
	56045337AC	1			31				w/Overhead Console Type I, 6 Way Power Seats & w/Power Windows
		1			31				w/Power Windows, 6 Way Power Seats & w/o Overhead Console
	56045338AC	1			31				w/Overhead Console Type II & w/o 6 Way Power Seats

DAKOTA (AN)

SERIES	LINE	BODY	ENGINE	TRANSMISSION
L = Quad Cab L = Regular Cab L = Club Cab	1 = Dakota 2WD 5 = Dakota 4WD	31 = CLUB CAB 2-DR 6.5 FT BOX 61 = REG CAB 6.5 FT BOX 84 = CREW CAB 4-DR W.B.1	EPO = 2.5L 4 Cyl. EHO = 3.9L 6 Cyl. EMO = 5.9L 8 Cyl. EVO = 4.7L Magnum EHC = 3.9L SMPI V6 EML = 5.9L V8 MPI Engine EPE = 2.5L POWER TECH I-4 Cyl. EVA = 4.7L V8 MPI	DDC = TRANSMISSION - 5-SPEED HD MANUAL DG4 = TRANSMISSION-MULTI-SPEED AUTO, 45RFE DGK = TRANSMISSION - 4-SPD. AUTOMATIC,42RE DGT = TRANSMISSION - 4-SPD. AUTOMATIC,46RE DGO = AUTO. TRANS.

Wiring - Body & Accessory
Figure 8-1511

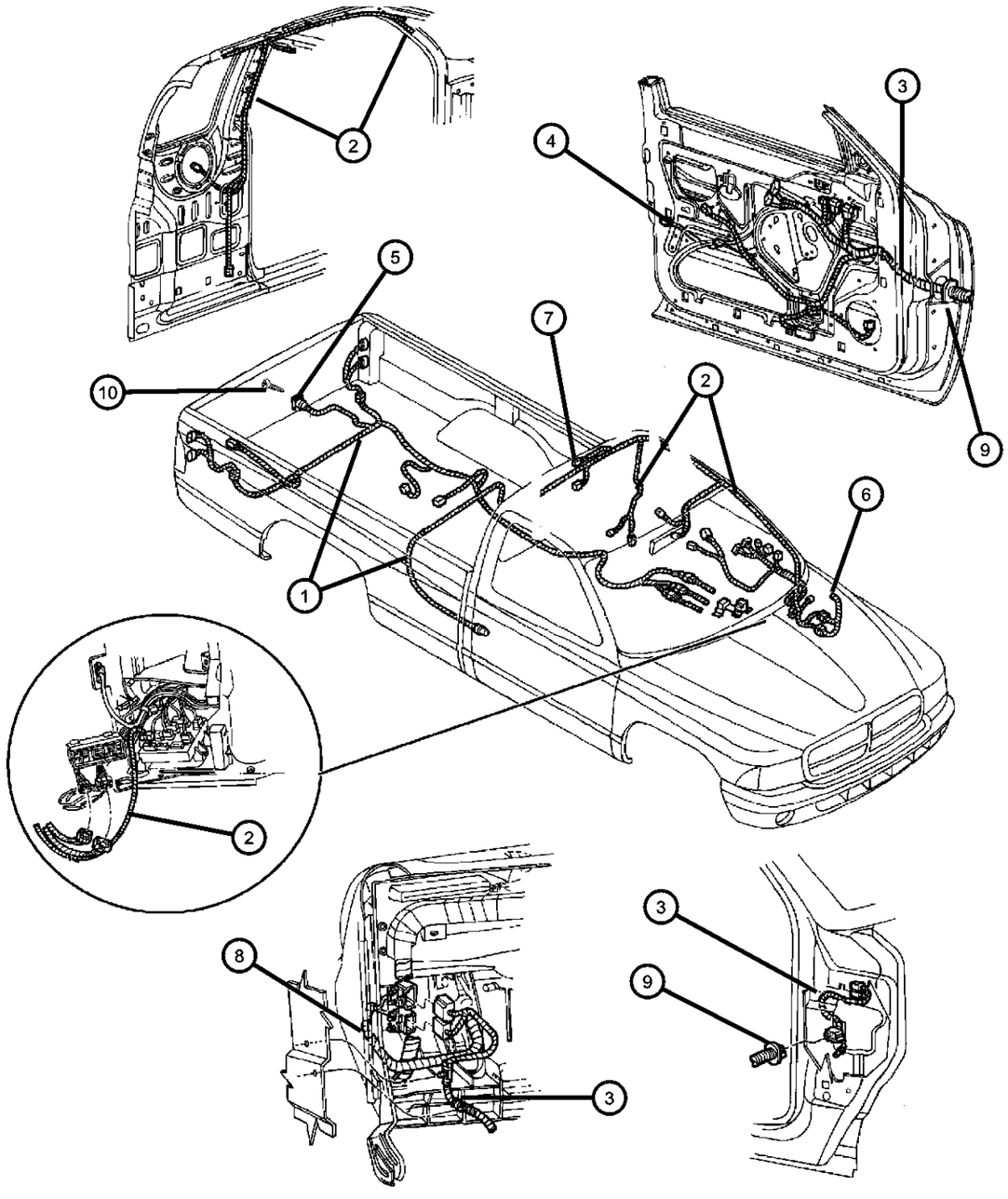

ITEM	PART NUMBER	QTY	LINE	SERIES	BODY	ENGINE	TRANS	TRIM	DESCRIPTION
	56045339AC	1			31				w/Overhead Console Type II & 6 Way Power Seats
	56045340AC	1			61				Base Model
	56045341AC	1			61				w/Overhead Console Type I & Power Windows
	56045342AC	1			61				w/Overhead Console Type II
	56045408AC	1			31				w/Overhead Console Type I, w/o 6 Way Power Seats & w/o Power Windows
	56045409AC	1			61				w/Overhead Console Type I & w/o Power Windows
	56045546AC	1			61				w/Power Windows, w/o Overhead Console
3									WIRING, Door
	56021482AE	1			31, 61				w/Power Windows & w/o Security Alarm, Right Door
	56021484AE	1			31, 61				w/Security Alarm, Right Door
	56021981AC	1			31, 61				w/Power Windows & w/o Security Alarm, Left Door
	56021983AC	1			31, 61				w/Security Alarm, Left Door
	56045021AC	2			31, 61				Base Model, Right And Left
	56045022AE	1			31, 61				w/Power Mirror , Infinity Speaker System, w/o Power Windows & w/o Security Alarm, Right Door
	56045023AC	1			31, 61				w/Power Mirror , Infinity Speaker System, w/o Power Windows & w/o Security Alarm, Left Door
	56045304AC	1			84				w/Power Windows, w/o Infinity Speaker System & w/o Security Alarm, Right Door
	56045305AC	1			84				w/Power Windows, w/o Infinity Speaker System & w/o Security Alarm, Left Door
	56045313AC	2			84				Base Model, Right And Left
4									WIRING, Front Door
	56021184AH	1			84				with Power Windows, Infinity Speakers & without Security Alarm, Right Door
		1			84				witht Security Alarm, Right Door

DAKOTA (AN)

SERIES	LINE	BODY	ENGINE	TRANSMISSION
L = Quad Cab	1 = Dakota 2WD	31 = CLUB CAB 2-DR 6.5 FT BOX	EPO = 2.5L 4 Cyl.	DDC = TRANSMISSION - 5-SPEED HD MANUAL
L = Regular Cab	5 = Dakota 4WD	61 = REG CAB 6.5 FT BOX	EHO = 3.9L 6 Cyl.	DG4 = TRANSMISSION-MULTI-SPEED AUTO, 45RFE
L = Club Cab		84 = CREW CAB 4-DR W.B.1	EMO = 5.9L 8 Cyl.	DGK = TRANSMISSION - 4-SPD. AUTOMATIC,42RE
			EVO = 4.7L Magnum	DGT = TRANSMISSION - 4-SPD. AUTOMATIC,46RE
			EHC = 3.9L SMPI V6	DGO = AUTO. TRANS.
			EML = 5.9L V8 MPI Engine	
			EPE = 2.5L POWER TECH I-4 Cyl.	
			EVA = 4.7L V8 MPI	

Wiring - Body & Accessory
Figure 8-1511

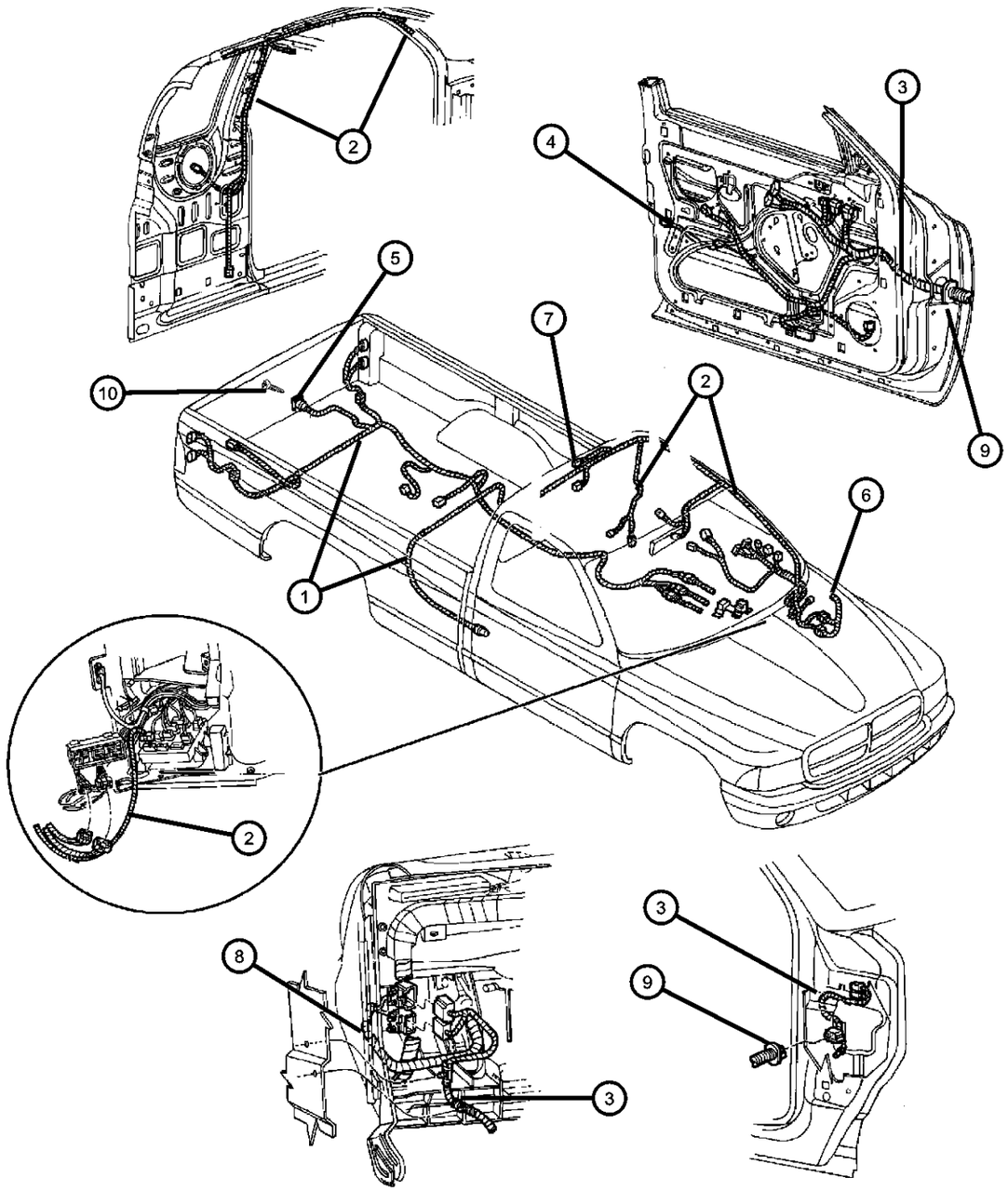

ITEM	PART NUMBER	QTY	LINE	SERIES	BODY	ENGINE	TRANS	TRIM	DESCRIPTION
	56021189AH	1			84				with Power Windows, Infinity Speakers & without Security Alarm, Left Door
		1			84				with Security Alarm, Left Door
	56021190AH	1			84				with Power Mirrors & without Power Windows or Security Alarm, Right Door
5	56020143AD	1							WIRING, Trailer Tow
6	56020238AB	1			31, 61, 84				WIRING, Underhood Lamp
7									WIRING, High Mounted Stop Lamp
	55055257	1			31, 61, 84				w/o Exterior Cargo Light
	55055258	1			31, 61, 84				w/Exterior Cargo Light
8	56018835	2			31, 61, 84				WIRING, Turn Signal and Back Up
9	56018835	2							GROMMET, Front Door, (NOT SERVICED)
10	56018835	2							SCREW, Tapping, .164-18x.625, (NOT SERVICED)
-11	56038366AB	1			31, 61, 84				CONNECTOR, 7 Way
-12	56021909AA	8			31, 61				GROMMET, Body Wiring
-13									WIRING, Power Seat
	56021335	1			31				
		1			84				
-14									WIRING, License Lamp
	56020624	1							Body Color
	56021598	1							Bright or Black Body Color
-15									WIRING, Rear Door
	56045204AA	1			84				Without Power Window, Right
	56045205AA	1			84				Without Power Window, Left
	56045206AA	1			84				With Power Window, Right
	56045207AA	1			84				With Power Window, Left

DAKOTA (AN)

SERIES	LINE	BODY	ENGINE	TRANSMISSION
L = Quad Cab L = Regular Cab L = Club Cab	1 = Dakota 2WD 5 = Dakota 4WD	31 = CLUB CAB 2-DR 6.5 FT BOX 61 = REG CAB 6.5 FT BOX 84 = CREW CAB 4-DR W.B.1	EPO = 2.5L 4 Cyl. EHO = 3.9L 6 Cyl. EMO = 5.9L 8 Cyl. EVO = 4.7L Magnum EHC = 3.9L SMPI V6 EML = 5.9L V8 MPI Engine EPE = 2.5L POWER TECH I-4 Cyl. EVA = 4.7L V8 MPI	DDC = TRANSMISSION - 5-SPEED HD MANUAL DG4 = TRANSMISSION-MULTI-SPEED AUTO, 45RFE DGK = TRANSMISSION - 4-SPD. AUTOMATIC,42RE DGT = TRANSMISSION - 4-SPD. AUTOMATIC,46RE DGO = AUTO. TRANS.

ITEM	PART NUMBER	QTY	LINE	SERIES	BODY	ENGINE	TRANS	TRIM	DESCRIPTION
NOTE: Sales Code: EDZ = 2.4L 4 CYL ENGINE EGA = 3.3L V6 MPI EGH = 3.8L V6 MPI ECB = 2.0L 4 CYL SOHC 16V ENC = 2.5L 4 CYL TURBO DIES. EC0 = ALL 2.0L 4 CYL ED0 = ALL 2.2L, 2.5L, 2.4L, 4CYL ENGINE EG0 = 3.3L, 3.5L, AND 3.8L ENGINE									
-1	05013930AA	1							WIRING PACKAGE, Underhood Connector Repair, For Electrical Connector Repair Information visit the World Wide Web at http://dto.vftis.com/mopar/dis-claimer.asp
-2	04364375	AR				EP0			TUBE, Convoluted
-3	03843386	2			31, 61, 84				TERMINAL
-4	05072951AA	1							WIRING REPAIR PACKAGE, Fuel Pump

For Electrical Connector Repair Information visit the World Wide Web at

http://dto.vftis.com/mopar/disclaimer.asp

DAKOTA (AN)

SERIES	LINE	BODY	ENGINE	TRANSMISSION
L = Quad Cab L = Regular Cab L = Club Cab	1 = Dakota 2WD 5 = Dakota 4WD	31 = CLUB CAB 2-DR 6.5 FT BOX 61 = REG CAB 6.5 FT BOX 84 = CREW CAB 4-DR W.B.1	EPO = 2.5L 4 Cyl. EHO = 3.9L 6 Cyl. EMO = 5.9L 8 Cyl. EVO = 4.7L Magnum EHC = 3.9L SMPI V6 EML = 5.9L V8 MPI Engine EPE = 2.5L POWER TECH I-4 Cyl. EVA = 4.7L V8 MPI	DDC = TRANSMISSION - 5-SPEED HD MANUAL DG4 = TRANSMISSION-MULTI-SPEED AUTO, 45RFE DGK = TRANSMISSION - 4-SPD. AUTOMATIC,42RE DGT = TRANSMISSION - 4-SPD. AUTOMATIC,46RE DGO = AUTO. TRANS.

Spark Plugs - Cables - Coils
Figure 8-1906

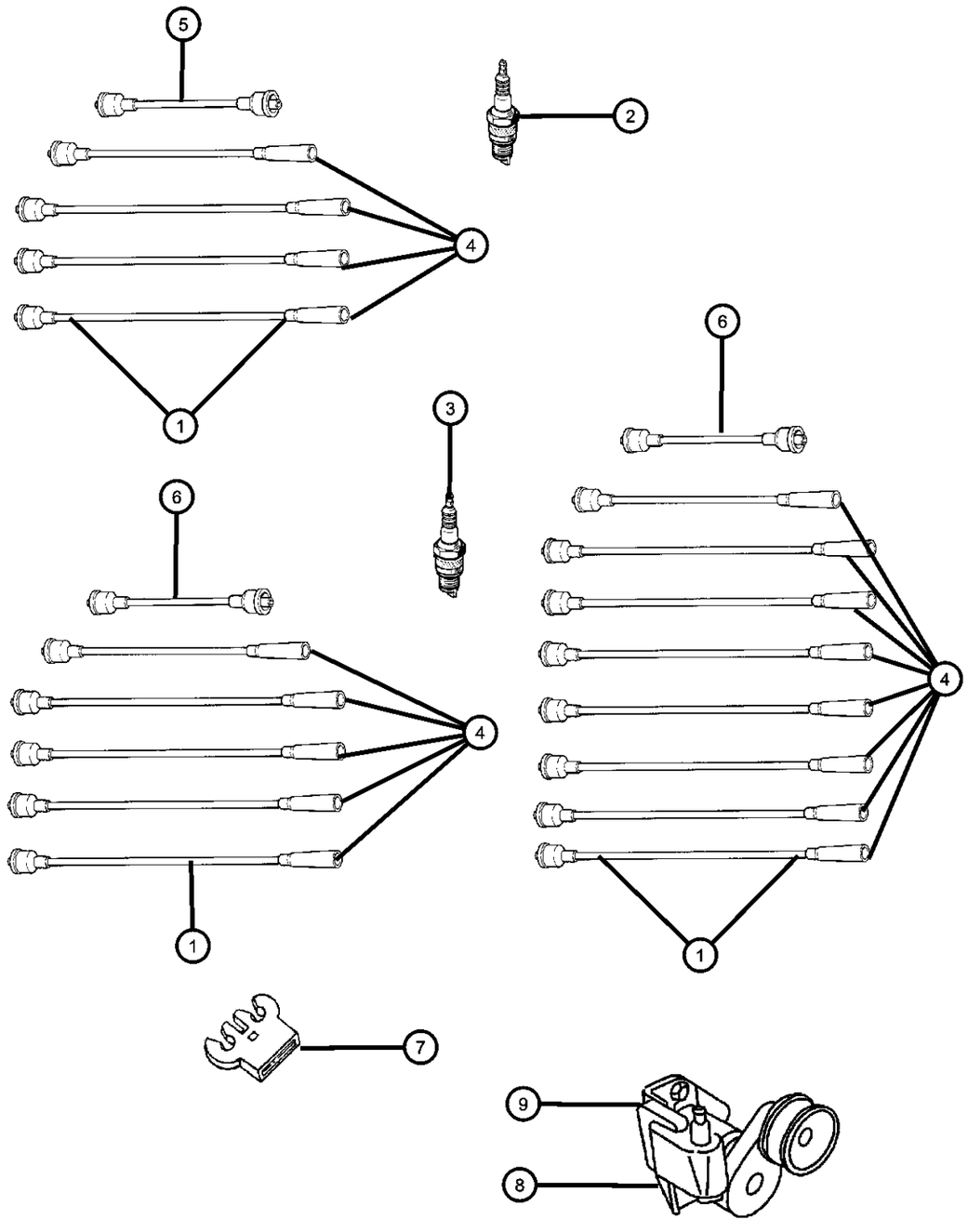

ITEM	PART NUMBER	QTY	LINE	SERIES	BODY	ENGINE	TRANS	TRIM	DESCRIPTION
EP0=2.5L Engine EH0=3.9L Engine EL0=5.2L Engine ELF=5.2L Engine (MAGNUM) EM0=5.9L Engine DG0=Automatic Transmission DBB=Manual Transmission									
1									CABLE PACKAGE, Ignition
	04728037AC	1				EH0			
	SPC39602AA								Mopar Tune Up Kit (Contains Cap Rotor and Spark Plug Wires)
	SPW08037AA								Mopar V-Line Alternative Part
	04728038AE	1				EM0			
	SPC52590AA								Mopar Tune Up Kit (Contains Cap Rotor and Spark Plug Wires)
	SPW08038AA								Mopar V-Line Alternative Part
	83507180	1				EP0			
	SPW07058AA								Mopar V-Line Alternative Part
2	SP000ZFR5N	4				EP0			SPARK PLUG
3									SPARK PLUG
	56028189	8				EM0			
	0SP00479								Canadian Aftermarket Part
	SP0RC12LC4	6			31, 61, 84	EH0			
	SPRC12MCC4	8			31, 61, 84	EV0			
4									CABLE, Ignition
	33007152	1				EP0			[#1]
	33007153	1				EP0			[#3]
		1				EP0			[#2]
	33007157	1				EP0			[#4]
	56028255AA	1				EM0			[#6]
		1				EH0			[#1]
	56028256AA	1				EH0			[#2]
		3				EM0			[#1,2,4]
	56028257AA	1				EH0			[#3]
	56028258AA	1				EH0			[#4]

DAKOTA (AN)

SERIES	LINE	BODY	ENGINE	TRANSMISSION
L = Quad Cab L = Regular Cab L = Club Cab	1 = Dakota 2WD 5 = Dakota 4WD	31 = CLUB CAB 2-DR 6.5 FT BOX 61 = REG CAB 6.5 FT BOX 84 = CREW CAB 4-DR W.B.1	EPO = 2.5L 4 Cyl. EHO = 3.9L 6 Cyl. EMO = 5.9L 8 Cyl. EVO = 4.7L Magnum EHC = 3.9L SMPI V6 EML = 5.9L V8 MPI Engine EPE = 2.5L POWER TECH I-4 Cyl. EVA = 4.7L V8 MPI	DDC = TRANSMISSION - 5-SPEED HD MANUAL DG4 = TRANSMISSION-MULTI-SPEED AUTO, 45RFE DGK = TRANSMISSION - 4-SPD. AUTOMATIC,42RE DGT = TRANSMISSION - 4-SPD. AUTOMATIC,46RE DGO = AUTO. TRANS.

Spark Plugs - Cables - Coils
Figure 8-1906

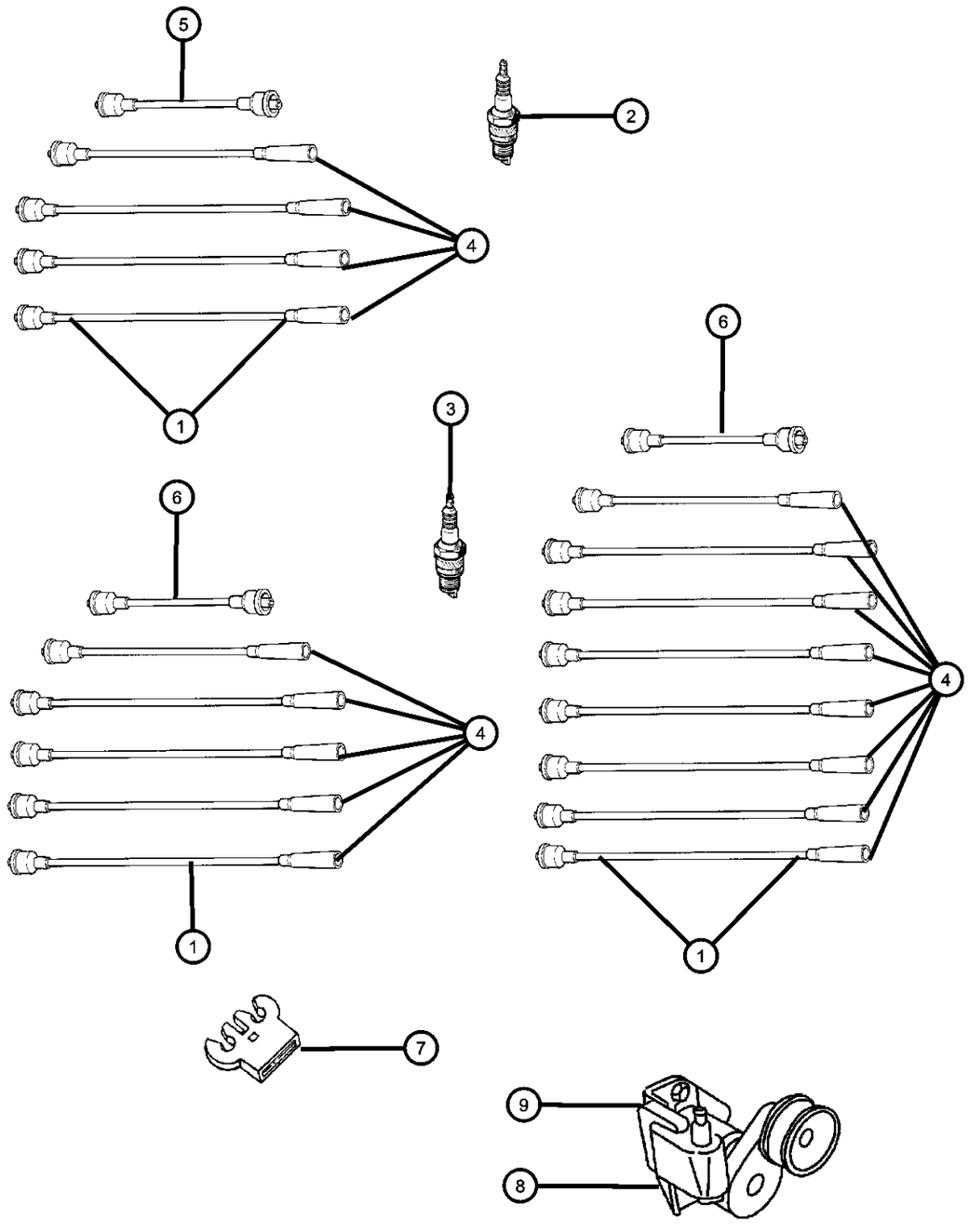

ITEM	PART NUMBER	QTY	LINE	SERIES	BODY	ENGINE	TRANS	TRIM	DESCRIPTION
	56028259AA	1				EH0			[#5]
	56028277AA	1				EH0			[#6]
		1				EM0			[#8]
	56028279AA	1				EM0			[#3]
	56028280AA	2				EM0			[#5,7]
5									CABLE, Ignition Coil
	56027045	1			31, 61, 84	EH0			
	56027270	1				EP0			
6									CABLE, Ignition Coil
	56028396AA	1				EH0			
	56028398AA	1				EM0			
7	53006579	1				EP0			SEPERATOR, Ignition Cable
8									COIL, Ignition
	56028138AB	8				EV0			
	56028172	1				EP0			
		1				EH0, EM0			
9									BRACKET, Ignition Coil
	53008702	1				EP0			
	56026891	1				EH0, EM0			
-10	05015297AA	8				EV0			O RING, Coil Pack

DAKOTA (AN)

SERIES	LINE	BODY	ENGINE	TRANSMISSION
L = Quad Cab	1 = Dakota 2WD	31 = CLUB CAB 2-DR 6.5 FT BOX	EPO = 2.5L 4 Cyl.	DDC = TRANSMISSION - 5-SPEED HD MANUAL
L = Regular Cab	5 = Dakota 4WD	61 = REG CAB 6.5 FT BOX	EHO = 3.9L 6 Cyl.	DG4 = TRANSMISSION-MULTI-SPEED AUTO, 45RFE
L = Club Cab		84 = CREW CAB 4-DR W.B.1	EMO = 5.9L 8 Cyl.	DGK = TRANSMISSION - 4-SPD. AUTOMATIC,42RE
			EVO = 4.7L Magnum	DGT = TRANSMISSION - 4-SPD. AUTOMATIC,46RE
			EHC = 3.9L SMPI V6	DGO = AUTO. TRANS.
			EML = 5.9L V8 MPI Engine	
			EPE = 2.5L POWER TECH I-4 Cyl.	
			EVA = 4.7L V8 MPI	

Group - 08A

Instrument Panel and Radios and Consoles

08A-100 Instrument Panel	08A-200 Instrument Panel Cluster	08A-300 Radio, Antenna, and Speakers	08A-400 Consoles
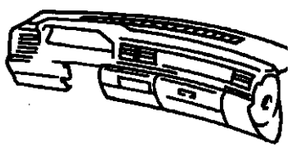	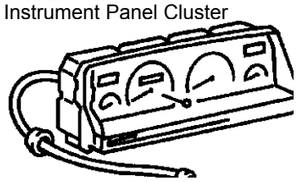	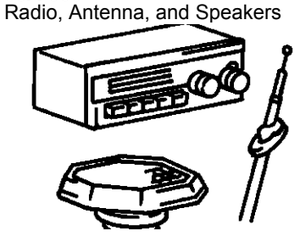	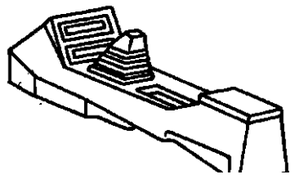

Group - 08A Instrument Panel and Radios and Consoles

Illustration Title — Group-Fig. No.

Instrument Panel
Instrument Panel ..... Fig. 08A - 111

Instrument Panel Cluster
Instrument Cluster ..... Fig. 08A - 211

Radio, Antenna, and Speakers
Radio ..... Fig. 08A - 311
Speakers ..... Fig. 08A - 316
Antenna ..... Fig. 08A - 321

Consoles
Console ..... Fig. 08A - 411
Overhead Console ..... Fig. 08A - 426

Instrument Panel
Figure 08A-111

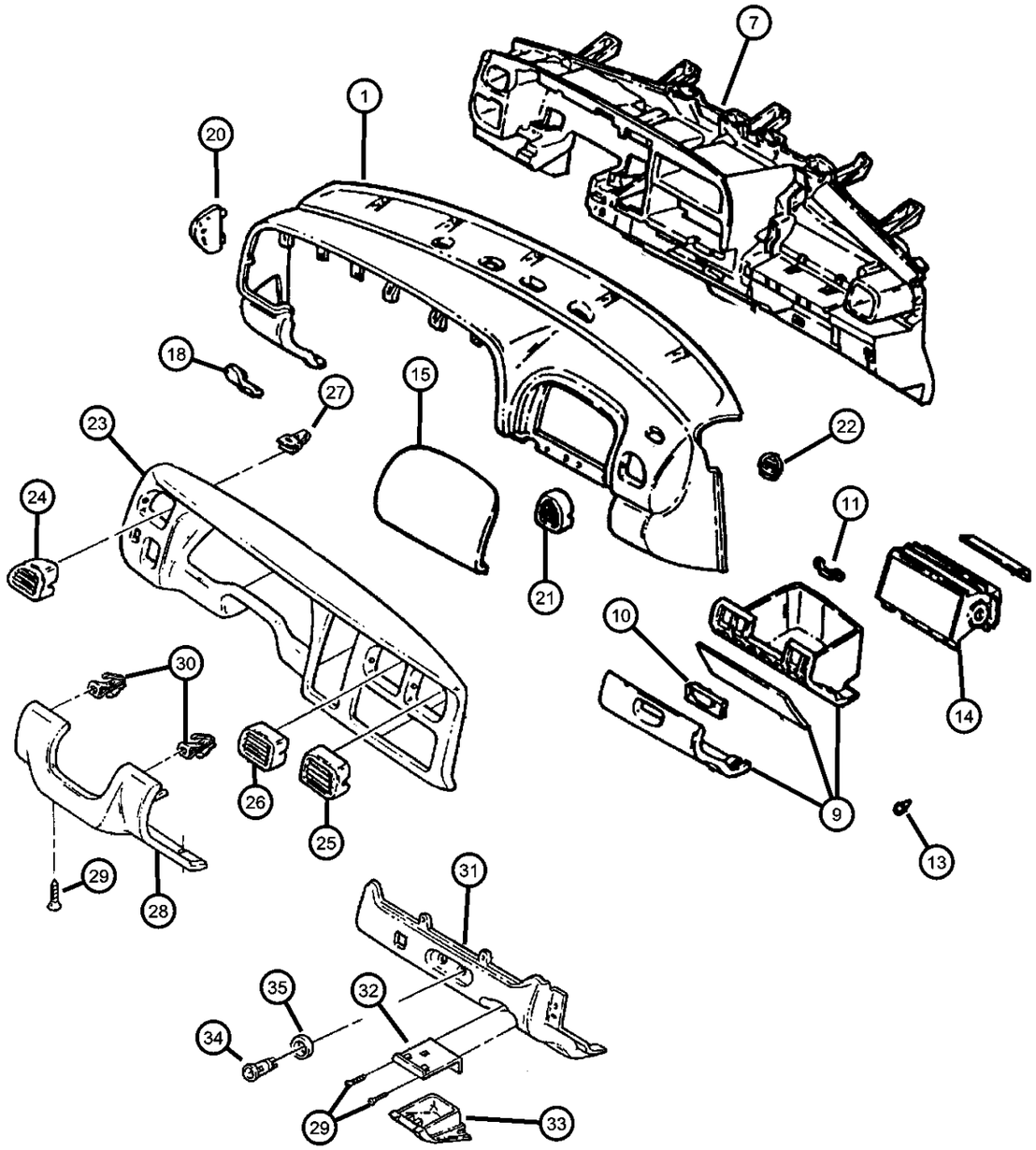

ITEM	PART NUMBER	QTY	LINE	SERIES	BODY	ENGINE	TRANS	TRIM	DESCRIPTION
1									PANEL, Instrument
	0TS541AZAA	1			84				Agate
		1			31, 61				Agate
	0TS541C8AA	1			84				Mist Gray
		1			31, 61				Mist Gray
-2	06504485AB	4			31, 61, 84				NUT, Plastic Snap-in
-3									FILLER, I/P To A Pillar
	5DX06LAZ	1			31, 61, 84				Agate, Right
	5DX06RC8	1			31, 61, 84				Mist Gray, Right
	5DX07LAZ	1			31, 61, 84				Agate, Left
	5DX07RC8	1			31, 61, 84				Mist Gray, Left
-4	55115835AB	1							SEAL, Cowl To Windshield
-5	55055721	1			31, 61, 84				SEAL, Air Oulet
-6	06504485AB	4			31, 61, 84				NUT, Plastic Snap-in
7	06504485AB	4							RETAINER, Instrument Panel Bezel, Serviced in Item #1, (NOT SERVICED)
-8	06504485AB	4							SCREW, (M4.8X1.59X32.00), (NOT SERVICED)
9									GLOVE BOX, Instrument Panel
	5DX16LAZ	1			31, 61, 84				Agate
	5DX16RC8	1			31, 61, 84				Mist Gray
10									LATCH, Glovebox
	5EM34LAZ	1			31, 61, 84				Agate
	5EM34RC8	1			31, 61, 84				Mist Gray
11	55115353	1			31, 61, 84				STRIKER, Glove Box Door Latch
-12	06034833	4			31, 61, 84				CLIP, Push, .164-7.5
13	55055900AA	4							BUMPER, Glove Box Door
14	55055900AA	4							AIR BAG, Passenger, (Serviced in I/Panel Assembly), (NOT SERVICED)
15	55055900AA	4							COVER, Air Bag Module, (Serviced w/Upper I/panel Assembly Item # 1), (NOT SERVICED)
-16	06035862	4			31, 61, 84				RIVET, .197 Grip-.187-.375

DAKOTA (AN)

SERIES	LINE	BODY	ENGINE	TRANSMISSION
L = Quad Cab	1 = Dakota 2WD	31 = CLUB CAB 2-DR 6.5 FT BOX	EPO = 2.5L 4 Cyl.	DDC = TRANSMISSION - 5-SPEED HD MANUAL
L = Regular Cab	5 = Dakota 4WD	61 = REG CAB 6.5 FT BOX	EHO = 3.9L 6 Cyl.	DG4 = TRANSMISSION-MULTI-SPEED AUTO, 45RFE
L = Club Cab		84 = CREW CAB 4-DR W.B.1	EMO = 5.9L 8 Cyl.	DGK = TRANSMISSION - 4-SPD. AUTOMATIC,42RE
			EVO = 4.7L Magnum	DGT = TRANSMISSION - 4-SPD. AUTOMATIC,46RE
			EHC = 3.9L SMPI V6	DGO = AUTO. TRANS.
			EML = 5.9L V8 MPI Engine	
			EPE = 2.5L POWER TECH I-4 Cyl.	
			EVA = 4.7L V8 MPI	

AR = use ase required - = Non illustrrated part

Instrument Panel
Figure 08A-111

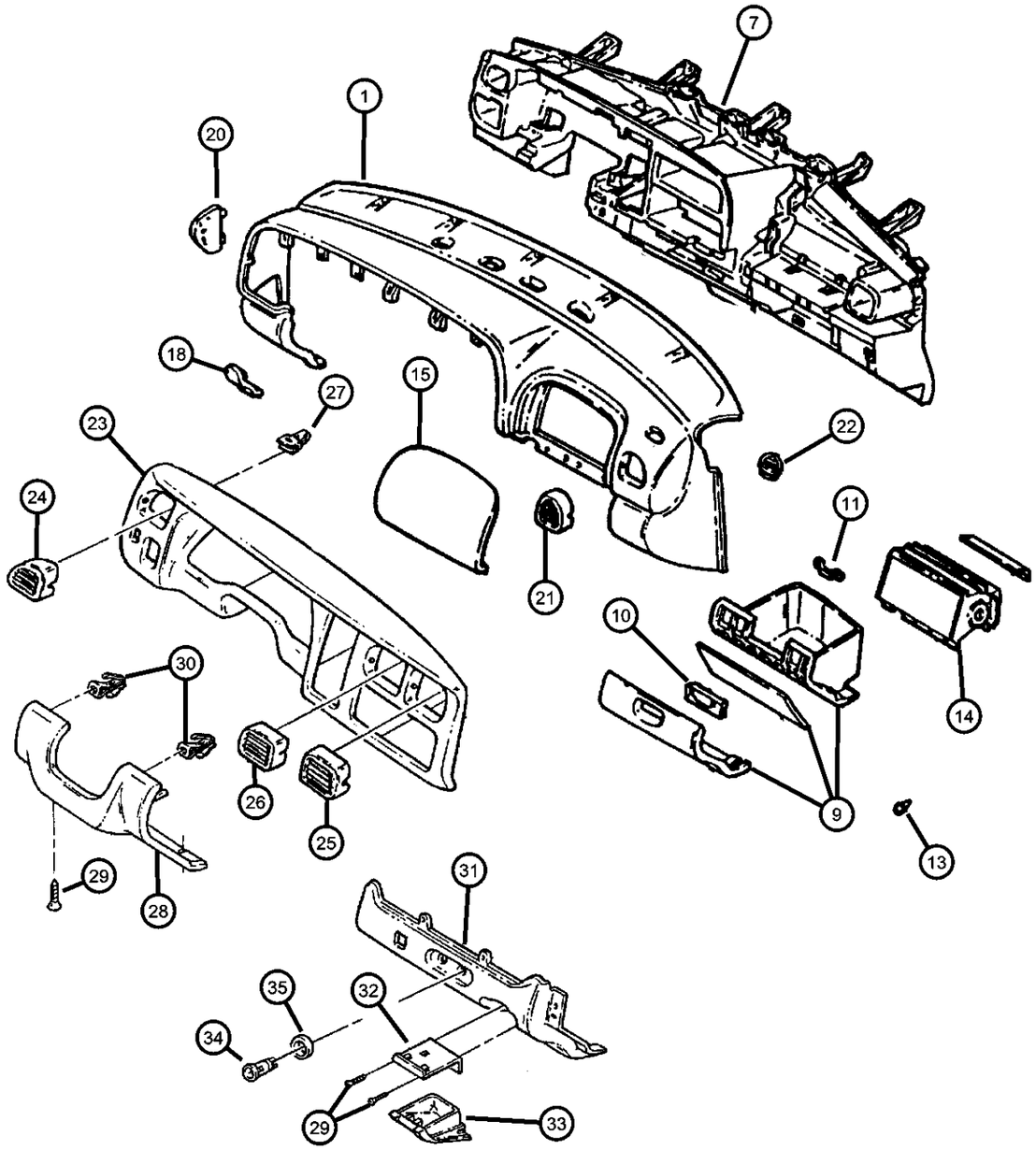

ITEM	PART NUMBER	QTY	LINE	SERIES	BODY	ENGINE	TRANS	TRIM	DESCRIPTION
-17	06034833	2			31, 61, 84				CLIP, Push, .164-7.5
18									HANDLE, Parking Brake
	5EG61LAZAB	1			31, 61, 84				Agate
	5EG61RC8AB	1			31, 61, 84				Mist Gray
-19	55055480	2			31, 61, 84				BUMPER, Parking Brake Lever
20									DOOR, Fuse Acess
	5FW31LAZAE	1							Agate
	5FW31RC8AE	1							Mist Gray
21									OUTLET, Air Conditioning & Heater
	5GR96LAZAA	1							Agate
	5GR96RC8AA	1							Mist Gray
22									GRILLE, Demister
	5DX10LAZ	1			31, 61, 84				Agate, Right
	5DX10RC8	1			31, 61, 84				Mist Gray, Right
	5DX11LAZ	1			31, 61, 84				Agate, Left
	5DX11RC8	1			31, 61, 84				Mist Gray, Left
23	5GD82DX9AC	1							BEZEL, Cluster, Black
24	55115377	1							OUTLET, Air Conditioning & Heater
25	55115736	1							OUTLET, Air Conditioning & Heater
26	55115737	1							OUTLET, Air Conditioning & Heater
27	06504067	1							CLIP, Hood
28									COVER, Instrument Panel
	5DX27LAZAB	1			31, 61, 84				Agate
	5DX27RC8AB	1			31, 61, 84				Mist Gray
29	06032723	4			31, 61, 84				SCREW, Self Tapping, M4.2x1.69x19.05
30	06504545	2							CLIP, Molding
31									BEZEL, Instrument Panel, Lower
	5EM31LAZAC	1			84				Agate (w/o Heated Rear Window)
	5EM31RC8AC	1			84				Mist Gray (w/o Heated Rear Window)
	5GD23LAZAB	1			31, 61, 84				Agate (w/Airbag on / off Switch & w/o Heated Rear Window)

DAKOTA (AN)

SERIES	LINE	BODY	ENGINE	TRANSMISSION
L = Quad Cab L = Regular Cab L = Club Cab	1 = Dakota 2WD 5 = Dakota 4WD	31 = CLUB CAB 2-DR 6.5 FT BOX 61 = REG CAB 6.5 FT BOX 84 = CREW CAB 4-DR W.B.1	EPO = 2.5L 4 Cyl. EHO = 3.9L 6 Cyl. EMO = 5.9L 8 Cyl. EVO = 4.7L Magnum EHC = 3.9L SMPI V6 EML = 5.9L V8 MPI Engine EPE = 2.5L POWER TECH I-4 Cyl. EVA = 4.7L V8 MPI	DDC = TRANSMISSION - 5-SPEED HD MANUAL DG4 = TRANSMISSION-MULTI-SPEED AUTO, 45RFE DGK = TRANSMISSION - 4-SPD. AUTOMATIC,42RE DGT = TRANSMISSION - 4-SPD. AUTOMATIC,46RE DGO = AUTO. TRANS.

AR = use ase required - = Non illustrrated part

Instrument Panel
Figure 08A-111

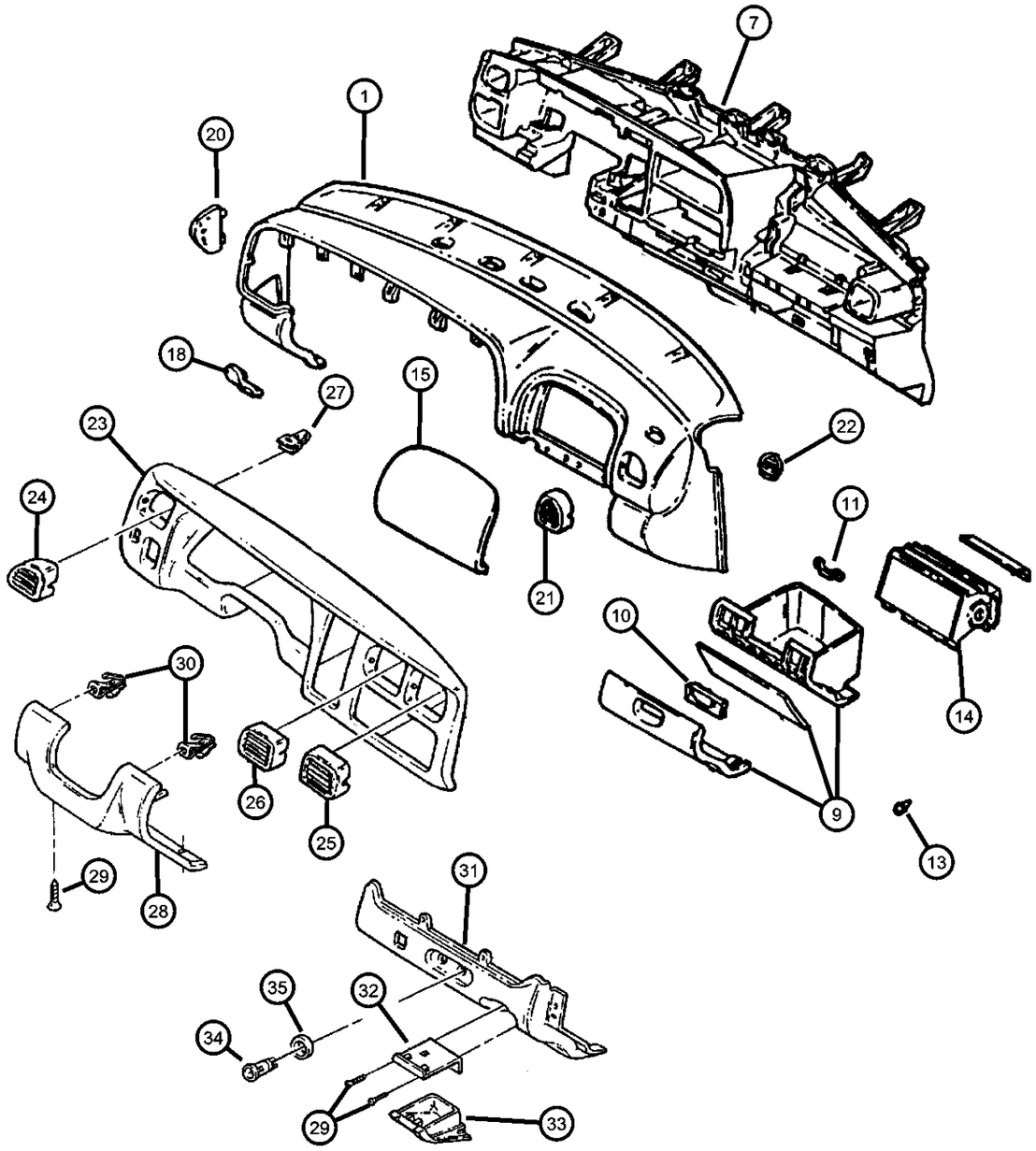

ITEM	PART NUMBER	QTY	LINE	SERIES	BODY	ENGINE	TRANS	TRIM	DESCRIPTION
	5GD23RC8AB	1			31, 61, 84				Mist Gray (w/Airbag on / off Switch & w/o Heated Rear Window)
	5GD86LAZAB	1			84				Agate (w/Heated Rear Window)
	5GD86RC8AB	1			84				Mist Gray (w/Heated Rear Window)
32	55115608AB	1			31, 61, 84				SHIELD, Ash Tray
33									ASH RECEIVER
	5EM361AZAB	1			31, 61, 84				Agate
	5EM361C8AB	1			31, 61, 84				Mist Gray
34	04685590	1			31, 61, 84				BASE, Cigar Lighter
35	04793555	1			31, 61, 84				RING, Cigar Lighter Mounting
-36									KNOB AND ELEMENT, Cigar Lighter
	04685536	1			31, 61				
		1			84				
-37	04793554	1							POWER OUTLET, Cigar Lighter
-38	04685591	1							CAP, Cigar Lighter
-39									PLUG, 12 V-Outlet
	0HX32LAZAB	1			31, 61, 84				Agate
	0HX32RC8AB	1			31, 61, 84				Mist Gray
-40	04685164	1							COVER, Glove Box Lamp Hole, w/o Glovebox Lamp
-41	56007476	1							PLUG, Gear Selector Plug (with Manual Transmissions)

DAKOTA (AN)

SERIES	LINE	BODY	ENGINE	TRANSMISSION
L = Quad Cab	1 = Dakota 2WD	31 = CLUB CAB 2-DR 6.5 FT BOX	EPO = 2.5L 4 Cyl.	DDC = TRANSMISSION - 5-SPEED HD MANUAL
L = Regular Cab	5 = Dakota 4WD	61 = REG CAB 6.5 FT BOX	EHO = 3.9L 6 Cyl.	DG4 = TRANSMISSION-MULTI-SPEED AUTO, 45RFE
L = Club Cab		84 = CREW CAB 4-DR W.B.1	EMO = 5.9L 8 Cyl.	DGK = TRANSMISSION - 4-SPD. AUTOMATIC,42RE
			EVO = 4.7L Magnum	DGT = TRANSMISSION - 4-SPD. AUTOMATIC,46RE
			EHC = 3.9L SMPI V6	DGO = AUTO. TRANS.
			EML = 5.9L V8 MPI Engine	
			EPE = 2.5L POWER TECH I-4 Cyl.	
			EVA = 4.7L V8 MPI	

Instrument Cluster
Figure 08A-211

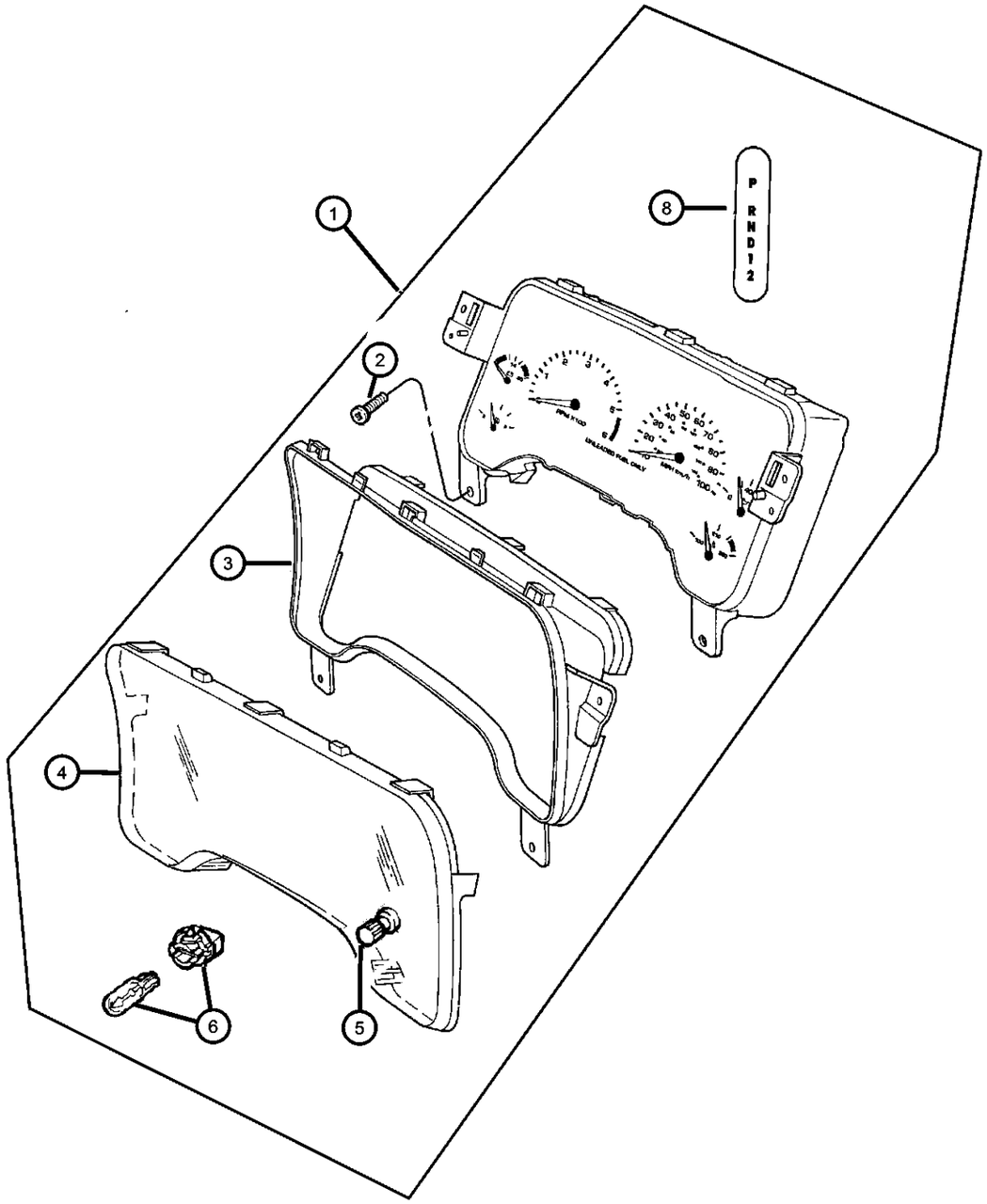

ITEM	PART NUMBER	QTY	LINE	SERIES	BODY	ENGINE	TRANS	TRIM	DESCRIPTION
1									CLUSTER
	56021655AH	1							120 MPH Analog withTach (Manual or Automatic Transmission)
	56021657AH	1							200 KPH Analog withTach (Manual or Automatic Transmission)
	56045383AC	1							Up to 02/14/00 with 120 MPH Analog withTach (Multi-Speed Automatic Transmission)
	56045383AE	1							02/14/00 & After with 120 MPH Analog withTach (Multi-Speed Automatic Transmission)
	56045385AC	1							Up to 02/14/00 with 200 KPH Analog withTach (Multi-Speed Automatic Transmission)
	56045385AE	1							02/14/00 & After with 200 KPH Analog withTach (Multi-Speed Automatic Transmission)
2	06032723	4			31, 61, 84				SCREW, Self Tapping, M4.2x1.69x19.05
3	56020162	1							MASK, Instrument Cluster
4	56020161	1							LENS, Cluster
5	56020161	1							KNOB, Odometer Reset, Serviced w/Cluster Assembly, (NOT SERVICED)
6	05269391	1	5		31, 61, 84				LAMP, Bulb And Socket
-7	L000PC74	1	5		31, 61, 84				BULB, PC74
8									INDICATOR, PRNDL
	04326965	AR							
	56020622	1			31, 61, 84				
-9	56007476	1							PLUG, with Manual Transmission
-10	56021790	1			31, 61, 84				BRACKET, Gear Selector

DAKOTA (AN)

SERIES	LINE	BODY	ENGINE	TRANSMISSION
L = Quad Cab L = Regular Cab L = Club Cab	1 = Dakota 2WD 5 = Dakota 4WD	31 = CLUB CAB 2-DR 6.5 FT BOX 61 = REG CAB 6.5 FT BOX 84 = CREW CAB 4-DR W.B.1	EPO = 2.5L 4 Cyl. EHO = 3.9L 6 Cyl. EMO = 5.9L 8 Cyl. EVO = 4.7L Magnum EHC = 3.9L SMPI V6 EML = 5.9L V8 MPI Engine EPE = 2.5L POWER TECH I-4 Cyl. EVA = 4.7L V8 MPI	DDC = TRANSMISSION - 5-SPEED HD MANUAL DG4 = TRANSMISSION-MULTI-SPEED AUTO, 45RFE DGK = TRANSMISSION - 4-SPD. AUTOMATIC,42RE DGT = TRANSMISSION - 4-SPD. AUTOMATIC,46RE DGO = AUTO. TRANS.

AR = use ase required - = Non illustrrated part

Radio
Figure 08A-311

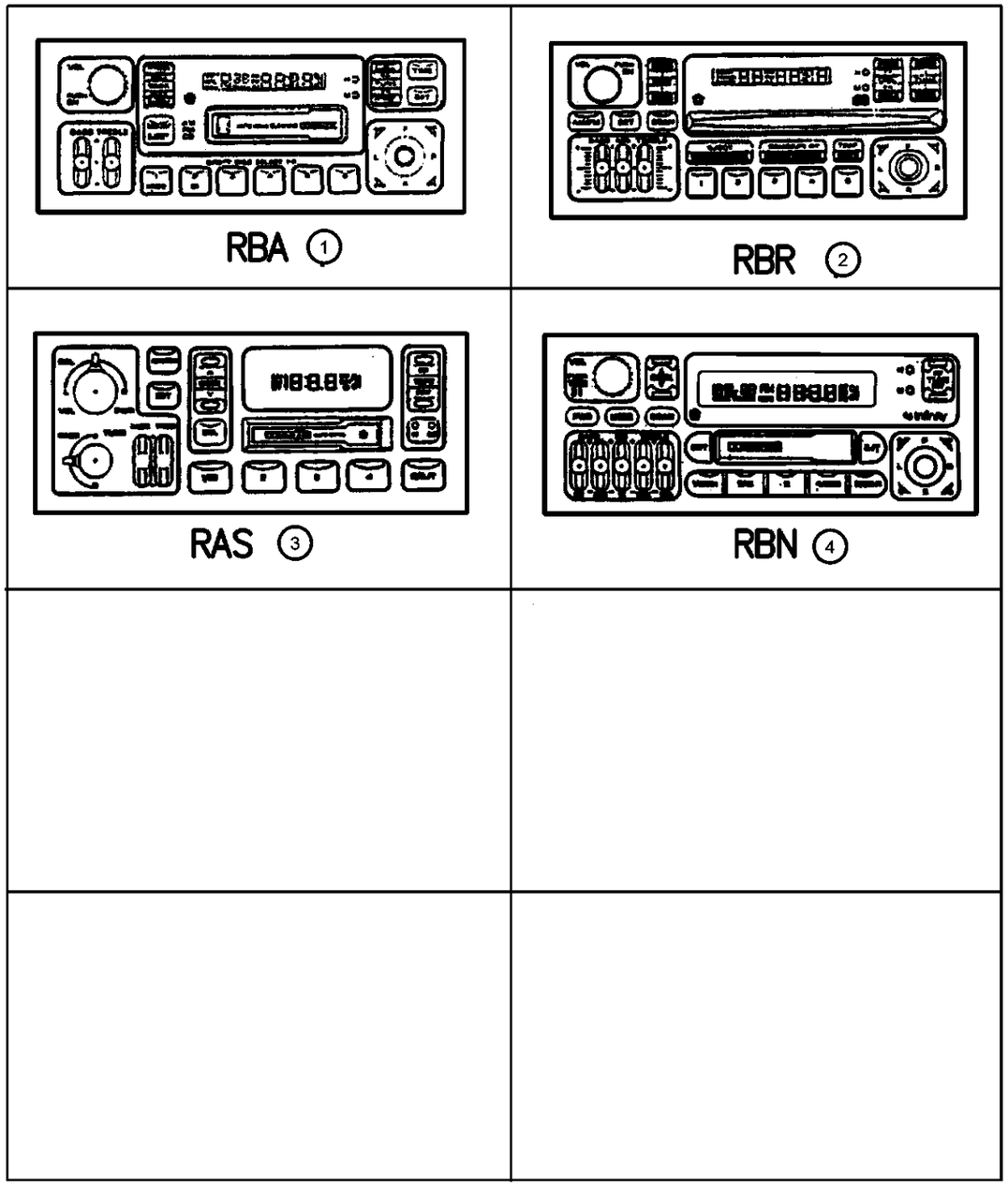

ITEM	PART NUMBER	QTY	LINE	SERIES	BODY	ENGINE	TRANS	TRIM	DESCRIPTION

RAS= AM/FM Cassette
RBA=AM/FM w/Cassette & CD Changer Control (Australia, Europe, Middle East & Taiwan)
RBN=AM/FM w/ Cassette & CD Changer Control
RBR=AMFM w/CD & Equalizer

1	04704392AD	1							RADIO, AM/FM Cassette with CD Control, RBA
2	04704373AD	1	1, 5		31, 61, 84				RADIO, AM/FM with CD and Equalizer, RBR
3	56038933AB	1	1, 5		31, 61, 84				RADIO, AM/FM Cassette, RAS
4	04704386AE	1							RADIO, AM/FM Cassette with CD Control, RBN
-5	04704383AH	1							RADIO, AM/FM with CD and Cassette, RAZ

DAKOTA (AN)

SERIES	LINE	BODY	ENGINE	TRANSMISSION
L = Quad Cab L = Regular Cab L = Club Cab	1 = Dakota 2WD 5 = Dakota 4WD	31 = CLUB CAB 2-DR 6.5 FT BOX 61 = REG CAB 6.5 FT BOX 84 = CREW CAB 4-DR W.B.1	EPO = 2.5L 4 Cyl. EHO = 3.9L 6 Cyl. EMO = 5.9L 8 Cyl. EVO = 4.7L Magnum EHC = 3.9L SMPI V6 EML = 5.9L V8 MPI Engine EPE = 2.5L POWER TECH I-4 Cyl. EVA = 4.7L V8 MPI	DDC = TRANSMISSION - 5-SPEED HD MANUAL DG4 = TRANSMISSION-MULTI-SPEED AUTO, 45RFE DGK = TRANSMISSION - 4-SPD. AUTOMATIC,42RE DGT = TRANSMISSION - 4-SPD. AUTOMATIC,46RE DGO = AUTO. TRANS.

Speakers
Figure 08A-316

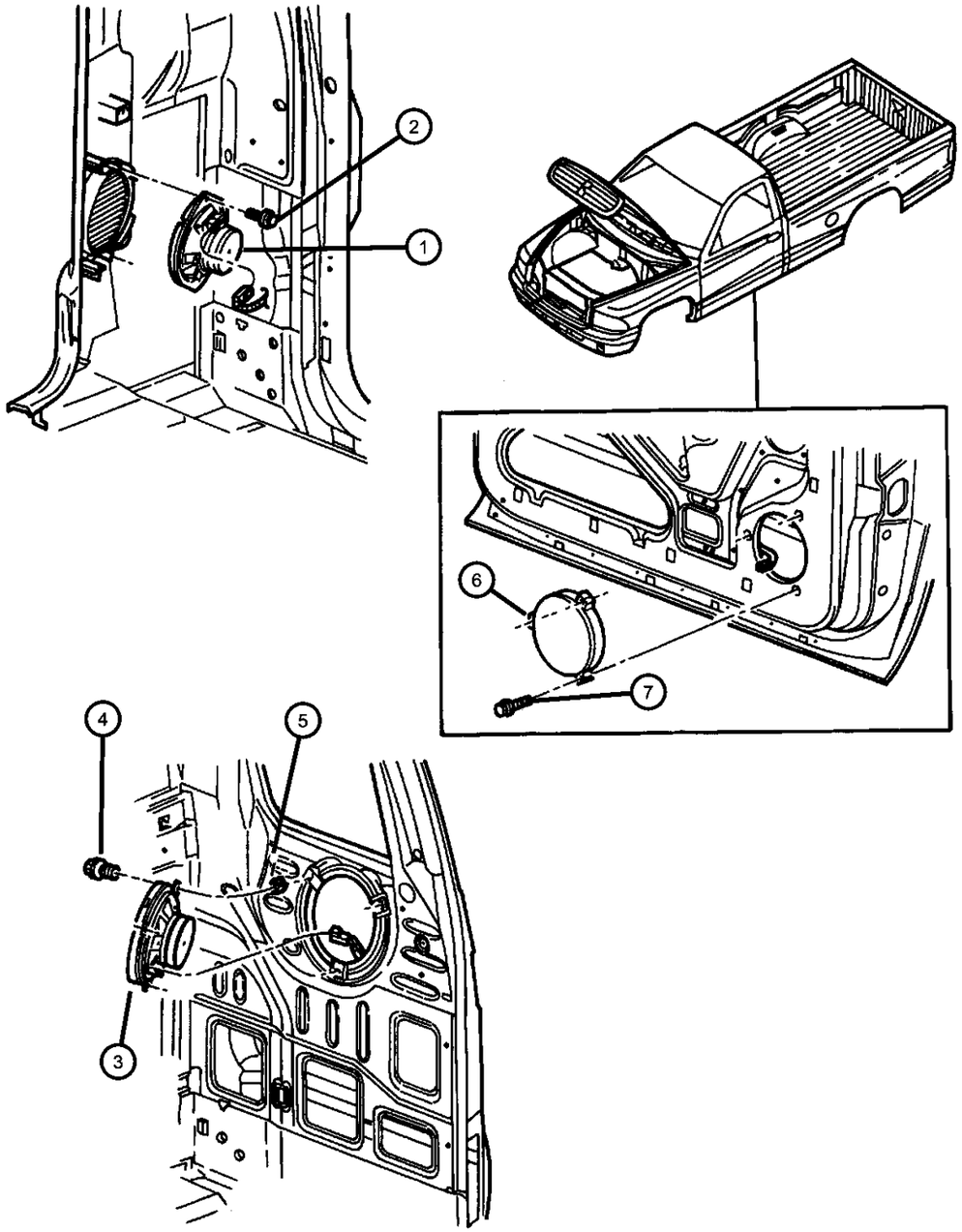

ITEM	PART NUMBER	QTY	LINE	SERIES	BODY	ENGINE	TRANS	TRIM	DESCRIPTION
1									SPEAKER, 5.25", Standard Cab
	56043114AA	2			61				Rear Standard
	56043115AA	2			61				Rear Infinity
2	56043115AA	2							SCREW, Tapping Pan Head (.164-18x.500), (NOT SERVICED),
3									SPEAKER, Rear, 6.5
	56043111AA	2			31				[RCK]
		2			84				[RCK]
	56043141AA	2			31				[RCD]
4	56043141AA	2							SCREW, Tapping, Hex Flange Head (M4.8x1.59x20.00), (NOT SERVICED),
5	06034715	6			31, 84				CLIP, Speaker
6									SPEAKER, 6.5"
	56043094AB	2			84				Front Door Standard
	56043108AA	2			31, 61				Front Door Infinity
	56043109AA	2			84				Front Door Infinity
	56043140AA	2			31, 61				Front Door Standard
		2			84				Rear Standard
7		2							SCREW, Tapping, Large Round Washer Head (.190-16x1.500), (NOT SERVICED),
-8									SPEAKER, Front Tweeter
	56007408	1			84				
		1			31, 61				

DAKOTA (AN)

SERIES	LINE	BODY	ENGINE	TRANSMISSION
L = Quad Cab	1 = Dakota 2WD	31 = CLUB CAB 2-DR 6.5 FT BOX	EPO = 2.5L 4 Cyl.	DDC = TRANSMISSION - 5-SPEED HD MANUAL
L = Regular Cab	5 = Dakota 4WD	61 = REG CAB 6.5 FT BOX	EHO = 3.9L 6 Cyl.	DG4 = TRANSMISSION-MULTI-SPEED AUTO, 45RFE
L = Club Cab		84 = CREW CAB 4-DR W.B.1	EMO = 5.9L 8 Cyl.	DGK = TRANSMISSION - 4-SPD. AUTOMATIC,42RE
			EVO = 4.7L Magnum	DGT = TRANSMISSION - 4-SPD. AUTOMATIC,46RE
			EHC = 3.9L SMPI V6	DGO = AUTO. TRANS.
			EML = 5.9L V8 MPI Engine	
			EPE = 2.5L POWER TECH I-4 Cyl.	
			EVA = 4.7L V8 MPI	

Antenna
Figure 08A-321

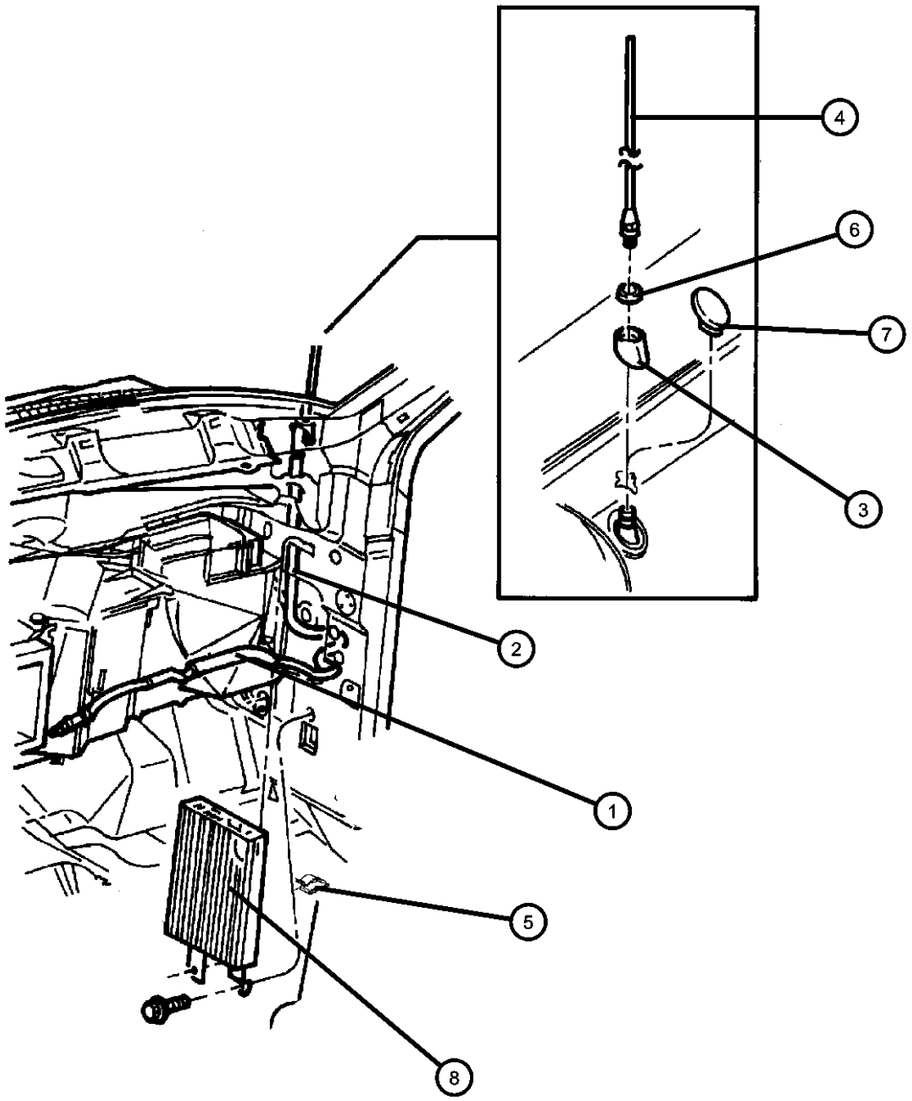

ITEM	PART NUMBER	QTY	LINE	SERIES	BODY	ENGINE	TRANS	TRIM	DESCRIPTION
1	56007460AB	1			31, 61, 84				ANTENNA, Base Cable And Bracket
2	56007360	1			31, 61, 84				CABLE, Antenna
3	56007461	1			31, 61, 84				ADAPTER, Antenna
4	04685574	1			31, 61, 84				MAST, Antenna, Black
5	04294036	1			31, 61, 84				CLIP
6	56007570	1			31, 61, 84				NUT, M6x1
7	56007462	1			31, 61, 84				PLUG, Antenna Hole
8									AMPLIFIER, Radio
	56043050AE	1			31, 61				
	56043129AA	1			84				

DAKOTA (AN)

SERIES	LINE	BODY	ENGINE	TRANSMISSION
L = Quad Cab L = Regular Cab L = Club Cab	1 = Dakota 2WD 5 = Dakota 4WD	31 = CLUB CAB 2-DR 6.5 FT BOX 61 = REG CAB 6.5 FT BOX 84 = CREW CAB 4-DR W.B.1	EPO = 2.5L 4 Cyl. EHO = 3.9L 6 Cyl. EMO = 5.9L 8 Cyl. EVO = 4.7L Magnum EHC = 3.9L SMPI V6 EML = 5.9L V8 MPI Engine EPE = 2.5L POWER TECH I-4 Cyl. EVA = 4.7L V8 MPI	DDC = TRANSMISSION - 5-SPEED HD MANUAL DG4 = TRANSMISSION-MULTI-SPEED AUTO, 45RFE DGK = TRANSMISSION - 4-SPD. AUTOMATIC,42RE DGT = TRANSMISSION - 4-SPD. AUTOMATIC,46RE DGO = AUTO. TRANS.

Console
Figure 08A-411

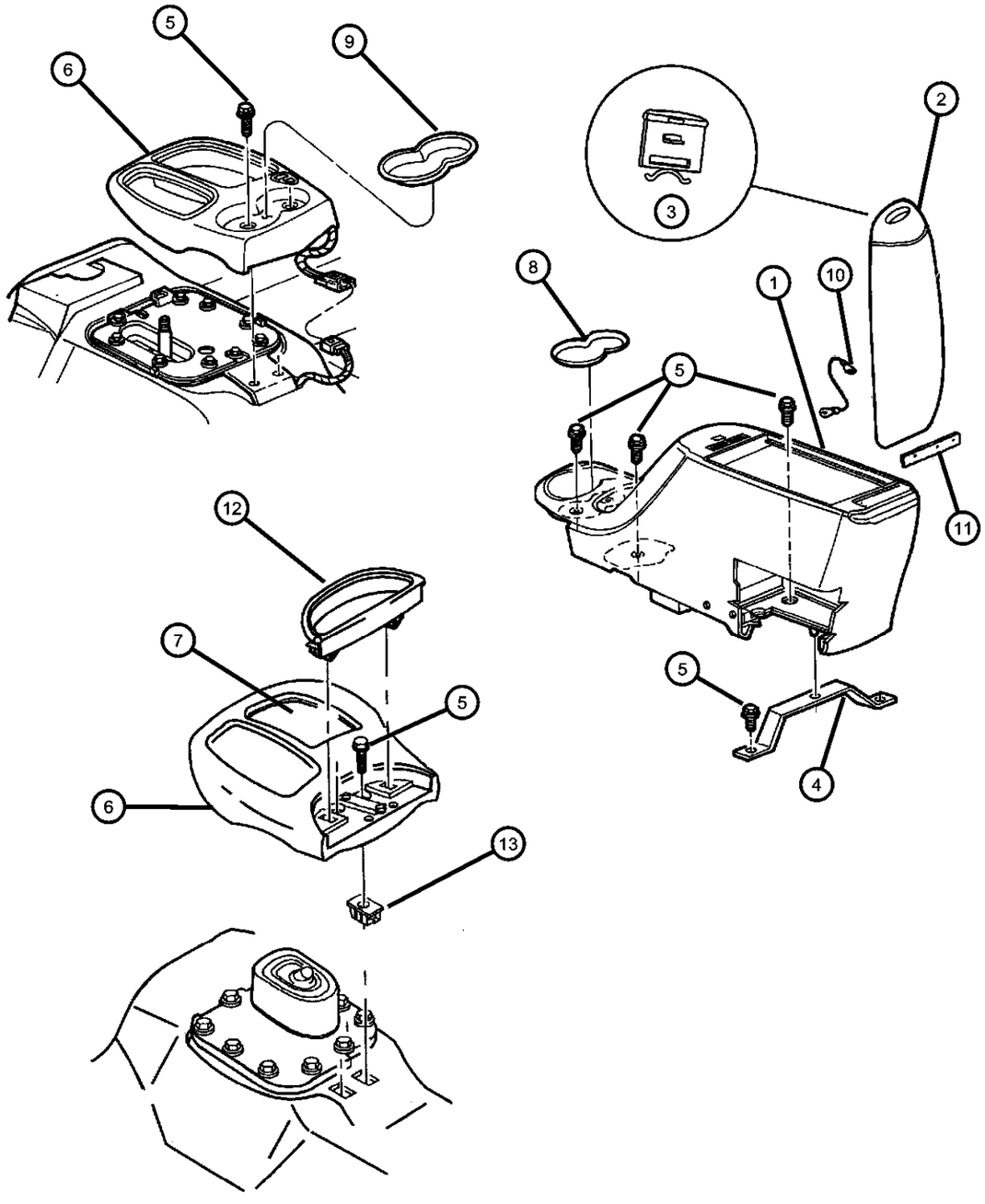

ITEM	PART NUMBER	QTY	LINE	SERIES	BODY	ENGINE	TRANS	TRIM	DESCRIPTION
1									BASE, Floor Console, High and Low Tunnel
	0RM211AZAB	1	5		31, 61, 84				Agate
		1							Agate
	0RM211C3AB	1							Mist Gray
		1	5		31, 61, 84				Mist Gray
2									LID, Floor Console Bin
	0RB041AZAA	1	5		31, 61, 84				Agate
	0RB041C3AA	1	5		31, 61, 84				Mist Gray
3	05010133AA	1	5		31, 61, 84				LATCH, Armrest Lid
4									BRACKET, Console
	55055742	1			31, 61, 62				
	55055883AA	1			84				
5	55055883AA	1							SCREW, Self Drilling, Hex Flange Head, Sealing (M4.8x1.59x25.00), (NOT SERVICED)
6									BEZEL, Gear Selector
	5FL84LAZAC	1	1						Agate (Automatic Transmission) 2WD
	5FL84RC3AC	1	1						Mist Gray (Automatic Transmission) 2WD
	5FZ82LAZAB	1	1		31, 61, 84				Agate (Manual Transmission)
	5FZ82RC3AB	1	1		31, 61, 84				Mist Gray (Manual Transmission)
	5GE35LAZAD	1	5		31, 61				Agate [242 Transfer Case], Automatic Transmission
		1	5		84				Agate [242 Transfer Case], Automatic Transmission
	5GE35RC3AD	1	5		31, 61				Mist Gray [242 Transfer Case], Automatic Transmission
		1	5		84				Mist Gray [242 Transfer Case], Automatic Transmission
	5GE36LAZAD	1	5		31, 61				Agate [231 Transfer Case], Manual Transmission
		1	5		84				Agate [231 Transfer Case], Manual Transmission
	5GE36RC3AD	1	5		31, 61				Mist Gray [231 Transfer Case], Manual Transmission
		1	5		84				Mist Gray [231 Transfer Case], Manual Transmission

DAKOTA (AN)

SERIES	LINE	BODY	ENGINE	TRANSMISSION
L = Quad Cab	1 = Dakota 2WD	31 = CLUB CAB 2-DR 6.5 FT BOX	EPO = 2.5L 4 Cyl.	DDC = TRANSMISSION - 5-SPEED HD MANUAL
L = Regular Cab	5 = Dakota 4WD	61 = REG CAB 6.5 FT BOX	EHO = 3.9L 6 Cyl.	DG4 = TRANSMISSION-MULTI-SPEED AUTO, 45RFE
L = Club Cab		84 = CREW CAB 4-DR W.B.1	EMO = 5.9L 8 Cyl.	DGK = TRANSMISSION - 4-SPD. AUTOMATIC,42RE
			EVO = 4.7L Magnum	DGT = TRANSMISSION - 4-SPD. AUTOMATIC,46RE
			EHC = 3.9L SMPI V6	DGO = AUTO. TRANS.
			EML = 5.9L V8 MPI Engine	
			EPE = 2.5L POWER TECH I-4 Cyl.	
			EVA = 4.7L V8 MPI	

Console
Figure 08A-411

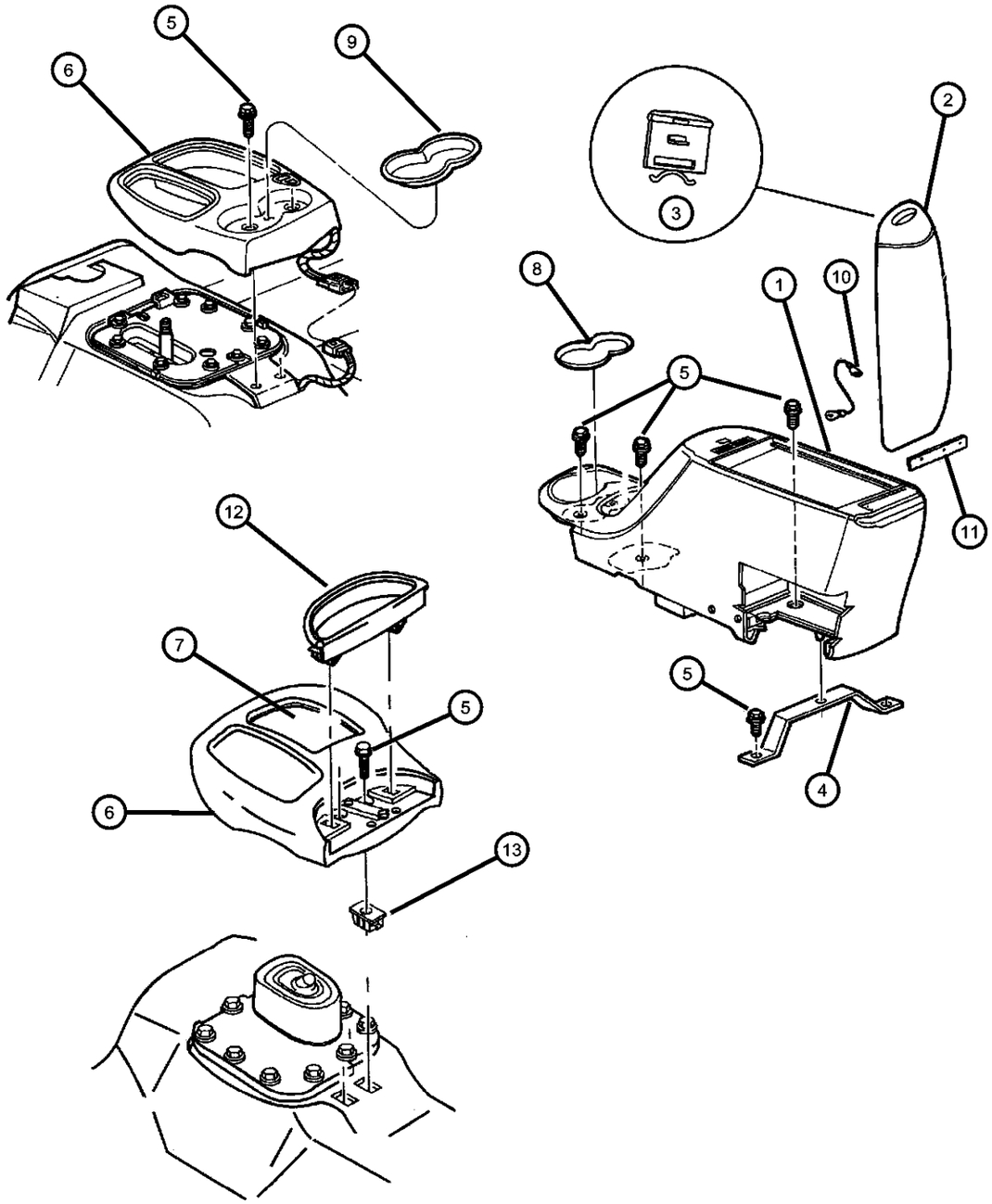

ITEM	PART NUMBER	QTY	LINE	SERIES	BODY	ENGINE	TRANS	TRIM	DESCRIPTION
	5GE94LAZAD	1	5		31, 61				Agate (Automatic Transmission 231 T/C) 4WD
	5GE94RC3AD	1	5		31, 61				Mist Gray (Automatic Transmission 231 T/C) 4WD
7									MAT, Console Cup Holder
	55055912AA	1	1						Mat Located in Shifter Bezel, Right Side
		1	5		31, 61				Mat Located in Shifter Bezel, Right Side
		1	5		84				Mat Located in Shifter Bezel, Right Side
8									MAT, Console Cup Holder
	04882713	1							
		1	5		31, 61, 84				Mat Package w/1 Round & 1 Peanut Shape Mat
9	55055858AB	1	1						MAT, Storage Tray
10	04897325AA	1	5		31, 61, 84				STRAP, Armrest Check
11	05010443AA	1	5		31, 61, 84				HINGE, Floor Console Lid
12	55055821AA	1			31, 61, 84				TRAY, Floor Storage
13	06505094AA	2	5		31, 61, 84				NUT
-14									BIN, Floor Console
	05012925AA	1							(CD Holder & Foam Strips Included)
		1	5		31, 61, 84				(CD Holder & Foam Strips Included)

DAKOTA (AN)

SERIES	LINE	BODY	ENGINE	TRANSMISSION
L = Quad Cab L = Regular Cab L = Club Cab	1 = Dakota 2WD 5 = Dakota 4WD	31 = CLUB CAB 2-DR 6.5 FT BOX 61 = REG CAB 6.5 FT BOX 84 = CREW CAB 4-DR W.B.1	EPO = 2.5L 4 Cyl. EHO = 3.9L 6 Cyl. EMO = 5.9L 8 Cyl. EVO = 4.7L Magnum EHC = 3.9L SMPI V6 EML = 5.9L V8 MPI Engine EPE = 2.5L POWER TECH I-4 Cyl. EVA = 4.7L V8 MPI	DDC = TRANSMISSION - 5-SPEED HD MANUAL DG4 = TRANSMISSION-MULTI-SPEED AUTO, 45RFE DGK = TRANSMISSION - 4-SPD. AUTOMATIC,42RE DGT = TRANSMISSION - 4-SPD. AUTOMATIC,46RE DGO = AUTO. TRANS.

Overhead Console
Figure 08A-426

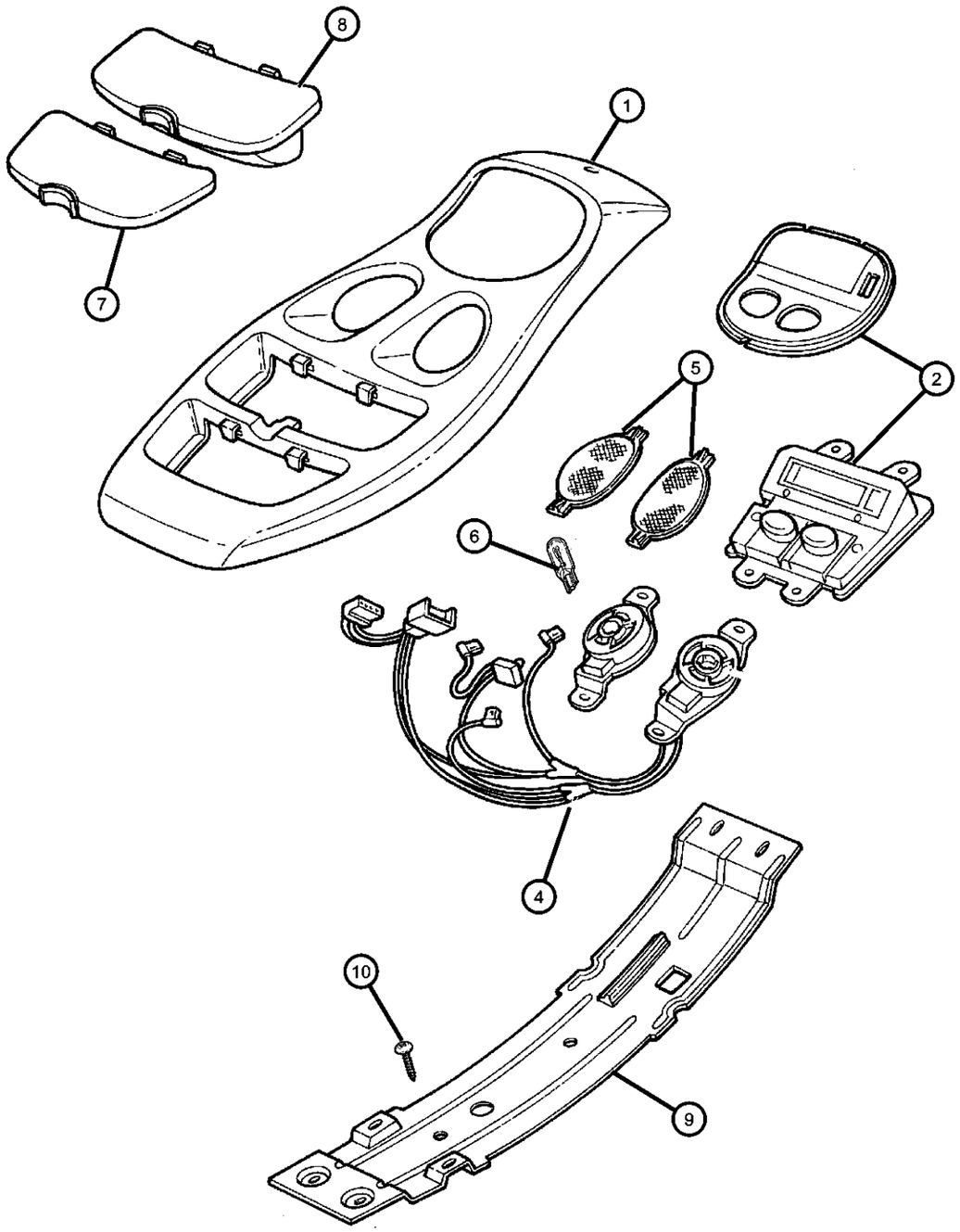

ITEM	PART NUMBER	QTY	LINE	SERIES	BODY	ENGINE	TRANS	TRIM	DESCRIPTION
1	0TE31TL2AA	1			31, 61, 84				HOUSING, Overhead Console, Beige (Type II)
2	56045185AB	1			31, 61, 84				MODULE, Compass Temperature, (Type II)
-3	0SE06TL2AA	1			31, 61, 84				PLUG, Console, Plastic, Beige w/o Temperature & Compass Module (Paper Clip (Use with Low Line Console) Compass Temperature Block-out)
4									WIRING, Overhead Console
	05012523AA	1			31, 61, 84				Overhead Console Type II w/Map Switches & Bulb Clips
	05012526AA	1			31, 61, 84				Overhead Console Type I
5									LENS, Reading Lamp
	05003658AB	1			31, 61, 84				Right
	05003659AB	1			31, 61, 84				Left
6	L0000578	1			31, 84				BULB, 578
7	0SE04TL2AA	1			31, 61, 84				DOOR, Garage Door Opener, Beige
8	0SE03TL2AA	1			31, 61, 84				DOOR, Sunglass Bin, Beige
9	55350828AA	1			31, 61, 84				BRACKET, Overhead Console
10	06032723	4			31, 61, 84				SCREW, Self Tapping, M4.2x1.69x19.05
-11	56045192AB	1			31, 61, 84				HOUSING, Dome and Reading Lamp, w/Full or Mini Overhead Console

DAKOTA (AN)

SERIES	LINE	BODY	ENGINE	TRANSMISSION
L = Quad Cab L = Regular Cab L = Club Cab	1 = Dakota 2WD 5 = Dakota 4WD	31 = CLUB CAB 2-DR 6.5 FT BOX 61 = REG CAB 6.5 FT BOX 84 = CREW CAB 4-DR W.B.1	EPO = 2.5L 4 Cyl. EHO = 3.9L 6 Cyl. EMO = 5.9L 8 Cyl. EVO = 4.7L Magnum EHC = 3.9L SMPI V6 EML = 5.9L V8 MPI Engine EPE = 2.5L POWER TECH I-4 Cyl. EVA = 4.7L V8 MPI	DDC = TRANSMISSION - 5-SPEED HD MANUAL DG4 = TRANSMISSION-MULTI-SPEED AUTO, 45RFE DGK = TRANSMISSION - 4-SPD. AUTOMATIC,42RE DGT = TRANSMISSION - 4-SPD. AUTOMATIC,46RE DGO = AUTO. TRANS.

Group - 9

Engine Mounting

009-100 Engine Mounting 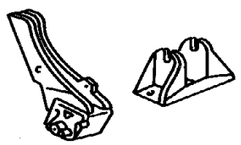			

Group - 9 Engine Mounting

Illustration Title — Group-Fig. No.

Engine Mounting

Engine Mounting, Front 2.5 (EPE) ..... Fig. 9 - 110
Engine Mounting, Rear ..... Fig. 9 - 120
Engine Mounting, Front, N1 ..... Fig. 9 - 130
Engine Mounting, Rear, N1 ..... Fig. 9 - 135
Engine Mounting, Front, N5 ..... Fig. 9 - 140
Engine Mounting, Rear, N5 ..... Fig. 9 - 145
Engine Mounting, Front, N1 ..... Fig. 9 - 150
Engine Mounting, Rear, N1 ..... Fig. 9 - 155
Engine Mounting, Front, N5 ..... Fig. 9 - 157
Engine Mounting, Rear, N5 ..... Fig. 9 - 159
Engine Mounting, Front, N5 ..... Fig. 9 - 160
Engine Mounting, Rear, N5 ..... Fig. 9 - 165
Mounting Engine Front, N1, 5.9L (EML) ..... Fig. 9 - 170
Mounting Engine Rear, N1, 5.9L (EML) ..... Fig. 9 - 175

Engine Mounting, Front 2.5 (EPE)
Figure 9-110

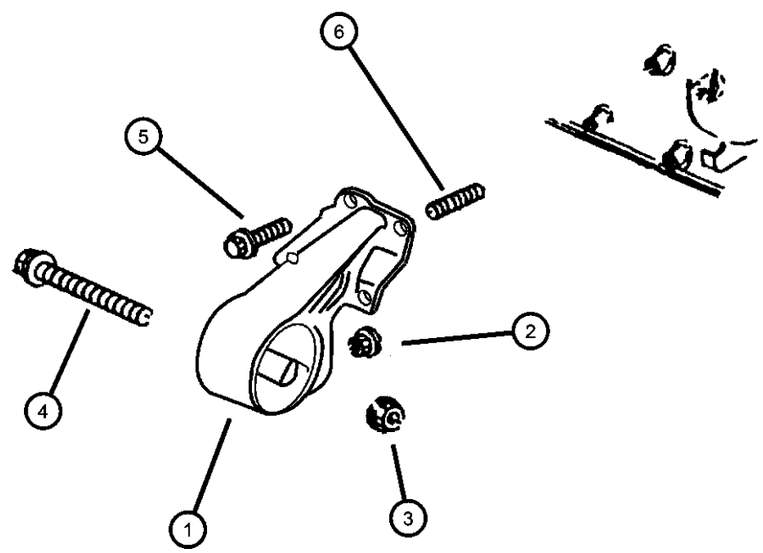

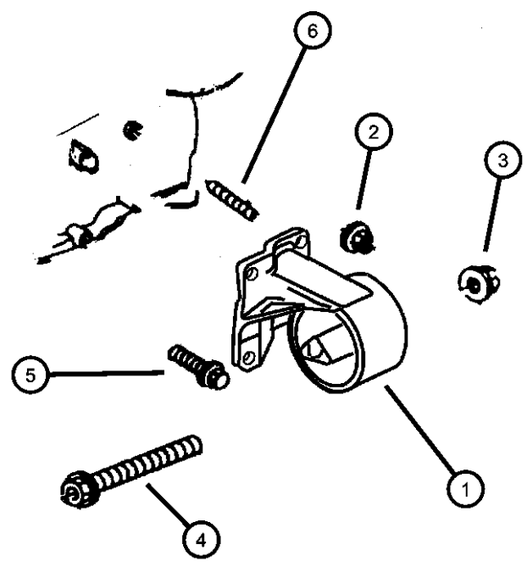

ITEM	PART NUMBER	QTY	LINE	SERIES	BODY	ENGINE	TRANS	TRIM	DESCRIPTION
1									INSULATOR, Engine Mount
	52060033AB	1	1			EP0			Left
	52060034	1	1			EP0			Right
2	00154880AA	1				EP0			NUT, Hex, .375-16
3	00154880AA	1							NUT, M12x1.75, (NOT SERVICED)
4	06502960	2							SCREW AND WASHER, Hex Head, M12x1.75x155
5	06035212	2	1			EP0			SCREW, Hex Flange Head, .375-16x1.125
6	06505526AA	1							STUD

DAKOTA (AN)

SERIES	LINE	BODY	ENGINE	TRANSMISSION
L = Quad Cab L = Regular Cab L = Club Cab	1 = Dakota 2WD 5 = Dakota 4WD	31 = CLUB CAB 2-DR 6.5 FT BOX 61 = REG CAB 6.5 FT BOX 84 = CREW CAB 4-DR W.B.1	EPO = 2.5L 4 Cyl. EHO = 3.9L 6 Cyl. EMO = 5.9L 8 Cyl. EVO = 4.7L Magnum EHC = 3.9L SMPI V6 EML = 5.9L V8 MPI Engine EPE = 2.5L POWER TECH I-4 Cyl. EVA = 4.7L V8 MPI	DDC = TRANSMISSION - 5-SPEED HD MANUAL DG4 = TRANSMISSION-MULTI-SPEED AUTO, 45RFE DGK = TRANSMISSION - 4-SPD. AUTOMATIC,42RE DGT = TRANSMISSION - 4-SPD. AUTOMATIC,46RE DGO = AUTO. TRANS.

Engine Mounting, Rear
Figure 9-120

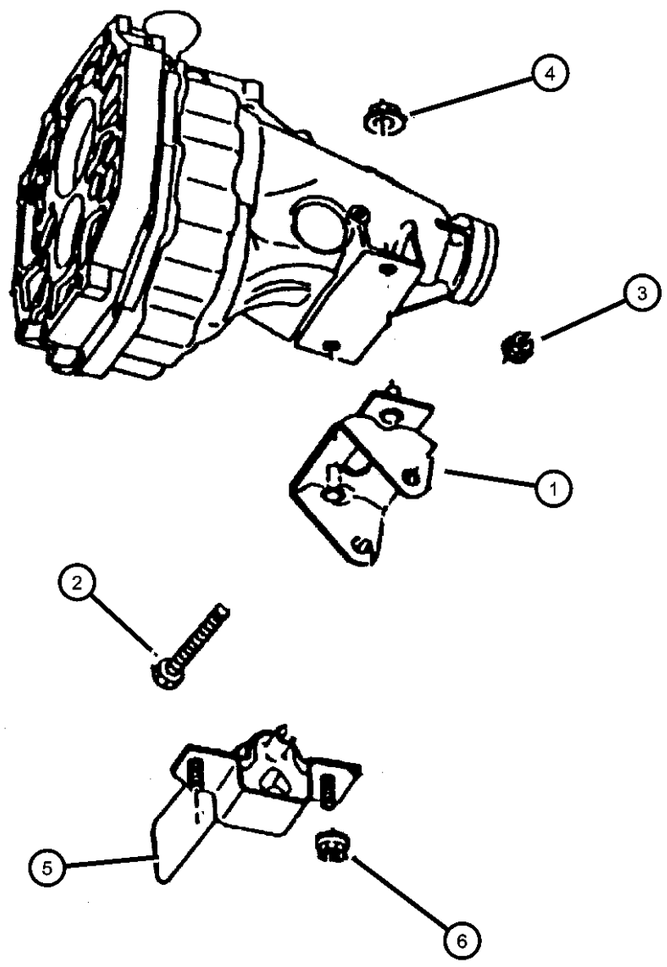

ITEM	PART NUMBER	QTY	LINE	SERIES	BODY	ENGINE	TRANS	TRIM	DESCRIPTION
1	52058669	1	1			EP0	DBB		BRACKET, Insulator
2	34202606	1	1						BOLT, Hex Head
3	06100055	1	1						NUT AND WASHER, Hex Nut-Coned Washer, M12 x 1.75
4	06100055	1							NUT, M10x1.50, (NOT SERVICED)
5	52019615	1	1			EH0, EP0			INSULATOR, Engine Mount
6	06101510	2	1				DBB		NUT, Flange Lock, M10x1.50

DAKOTA (AN)

SERIES	LINE	BODY	ENGINE	TRANSMISSION
L = Quad Cab L = Regular Cab L = Club Cab	1 = Dakota 2WD 5 = Dakota 4WD	31 = CLUB CAB 2-DR 6.5 FT BOX 61 = REG CAB 6.5 FT BOX 84 = CREW CAB 4-DR W.B.1	EPO = 2.5L 4 Cyl. EHO = 3.9L 6 Cyl. EMO = 5.9L 8 Cyl. EVO = 4.7L Magnum EHC = 3.9L SMPI V6 EML = 5.9L V8 MPI Engine EPE = 2.5L POWER TECH I-4 Cyl. EVA = 4.7L V8 MPI	DDC = TRANSMISSION - 5-SPEED HD MANUAL DG4 = TRANSMISSION-MULTI-SPEED AUTO, 45RFE DGK = TRANSMISSION - 4-SPD. AUTOMATIC,42RE DGT = TRANSMISSION - 4-SPD. AUTOMATIC,46RE DGO = AUTO. TRANS.

Engine Mounting, Front, N1
Figure 9-130

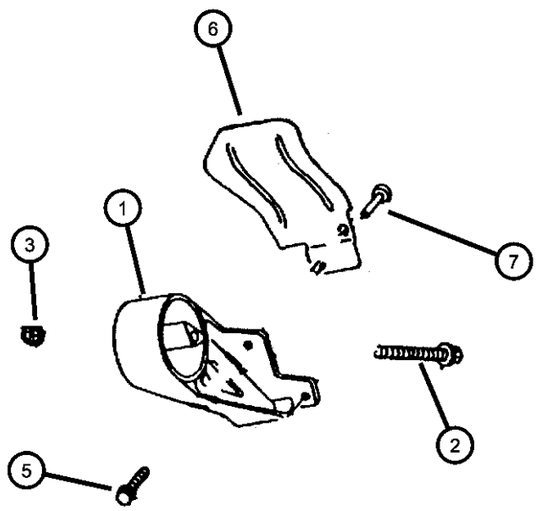

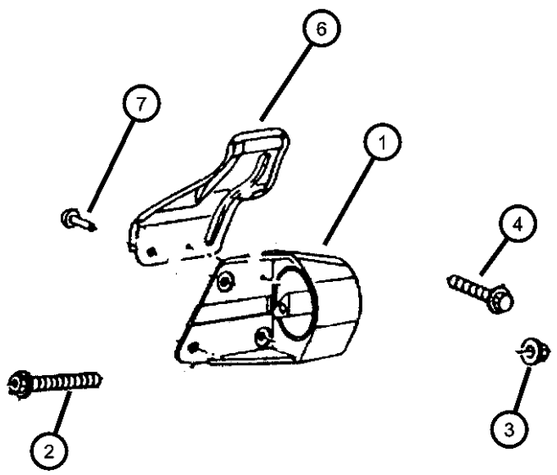

ITEM	PART NUMBER	QTY	LINE	SERIES	BODY	ENGINE	TRANS	TRIM	DESCRIPTION
1									INSULATOR, Engine Mount
	52009030	1	1			EH0			Right
	52010017	1	1			EH0			Left
2	06502960	2							SCREW AND WASHER, Hex Head, M12x1.75x155
3	06502960	2							NUT, M12x1.75, (NOT SERVICED)
4	06034161	3	1			EH0			SCREW AND WASHER, Hex Head, .375-16x1.00
5	06035212	3	1			EH0, EM0			SCREW, Hex Flange Head, .375-16x1.125
6									SHIELD, Engine Mount
	57008125	1	1			EH0, EM0			
	57008126	1	1			EM0			
7	57008126	1							SCREW, (NOT SERVICED)

DAKOTA (AN)

SERIES	LINE	BODY	ENGINE	TRANSMISSION
L = Quad Cab L = Regular Cab L = Club Cab	1 = Dakota 2WD 5 = Dakota 4WD	31 = CLUB CAB 2-DR 6.5 FT BOX 61 = REG CAB 6.5 FT BOX 84 = CREW CAB 4-DR W.B.1	EPO = 2.5L 4 Cyl. EHO = 3.9L 6 Cyl. EMO = 5.9L 8 Cyl. EVO = 4.7L Magnum EHC = 3.9L SMPI V6 EML = 5.9L V8 MPI Engine EPE = 2.5L POWER TECH I-4 Cyl. EVA = 4.7L V8 MPI	DDC = TRANSMISSION - 5-SPEED HD MANUAL DG4 = TRANSMISSION-MULTI-SPEED AUTO, 45RFE DGK = TRANSMISSION - 4-SPD. AUTOMATIC,42RE DGT = TRANSMISSION - 4-SPD. AUTOMATIC,46RE DGO = AUTO. TRANS.

AR = use ase required - = Non illustrrated part

Engine Mounting, Rear, N1
Figure 9-135

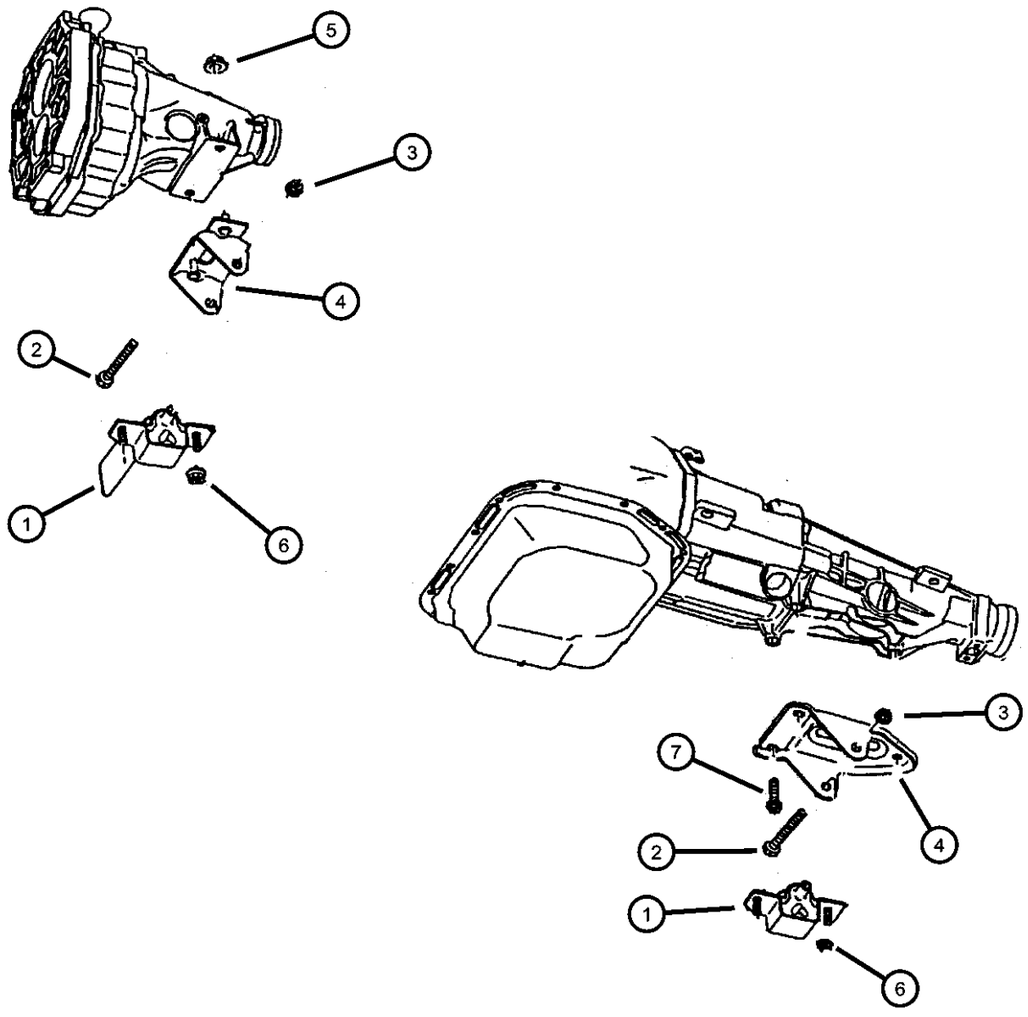

ITEM	PART NUMBER	QTY	LINE	SERIES	BODY	ENGINE	TRANS	TRIM	DESCRIPTION
1	52019615	1	1			EH0, EP0			INSULATOR, Engine Mount
2	34202606	1	1						BOLT, Hex Head
3	06100055	1	1						NUT AND WASHER, Hex Nut-Coned Washer, M12 x 1.75
4									BRACKET, Insulator
	52058636AB	1	1			EH0, EM0	DG0		
	52058669	1	1			EP0	DBB		
5	52058669	1							NUT, M10x1.50, (NOT SERVICED)
6	06101448	2	1						NUT AND WASHER, Hex Nut-Coned Washer, M10 x 1.5
7									SCREW AND WASHER, Hex Head Locking, .437-14x1.25
	06033358	2	1			EH0, EV0	DBB		
		3	1			EH0, EM0	DG0		

DAKOTA (AN)

SERIES	LINE	BODY	ENGINE	TRANSMISSION
L = Quad Cab	1 = Dakota 2WD	31 = CLUB CAB 2-DR 6.5 FT BOX	EPO = 2.5L 4 Cyl.	DDC = TRANSMISSION - 5-SPEED HD MANUAL
L = Regular Cab	5 = Dakota 4WD	61 = REG CAB 6.5 FT BOX	EHO = 3.9L 6 Cyl.	DG4 = TRANSMISSION-MULTI-SPEED AUTO, 45RFE
L = Club Cab		84 = CREW CAB 4-DR W.B.1	EMO = 5.9L 8 Cyl.	DGK = TRANSMISSION - 4-SPD. AUTOMATIC,42RE
			EVO = 4.7L Magnum	DGT = TRANSMISSION - 4-SPD. AUTOMATIC,46RE
			EHC = 3.9L SMPI V6	DGO = AUTO. TRANS.
			EML = 5.9L V8 MPI Engine	
			EPE = 2.5L POWER TECH I-4 Cyl.	
			EVA = 4.7L V8 MPI	

Engine Mounting, Front, N5
Figure 9-140

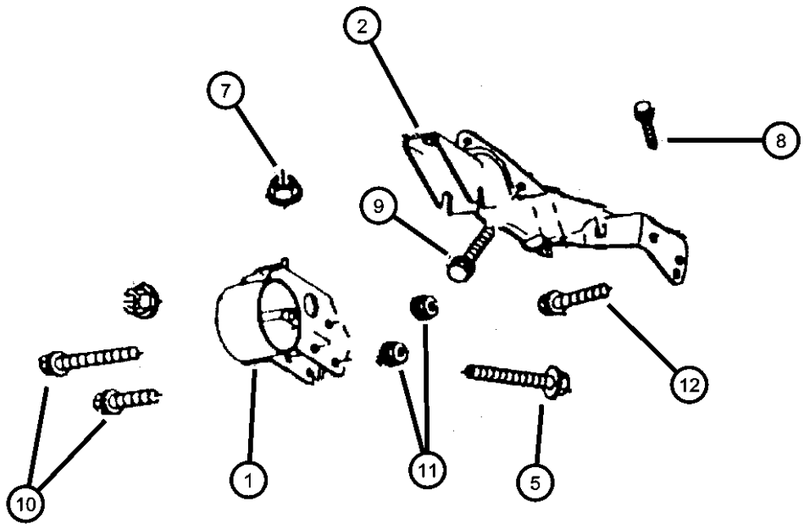

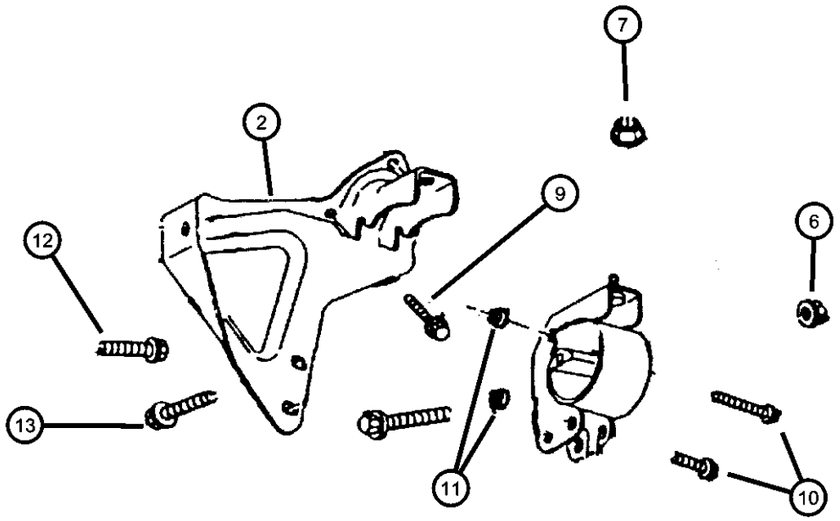

ITEM	PART NUMBER	QTY	LINE	SERIES	BODY	ENGINE	TRANS	TRIM	DESCRIPTION
1									INSULATOR, Engine Mount
	52022031AB	1	5			EH0			Left
	52022032AB	1	5			EH0			Right
2									BRACKET, Engine Mount
	52020247AB	1	5			EH0, EM0			Left
	52020346AB	1	5			EH0, EM0			Right
-3	52020470AB	1	5			EH0, EM0			BRACKET, Transmission Mount, Pinion Nose To Transmissions
-4	06502887	2	5			EH0, EM0, EV0			SCREW AND WASHER, Hex Head, M12x1.75x60
5	06502960	2							SCREW AND WASHER, Hex Head, M12x1.75x155
6	06502960	2							NUT, M12x1.75, (NOT SERVICED)
7	06101761	1	5			EH0, EM0, EV0			NUT, Coned Washer, M10 x 1.50
8	06101062	1	5			EV0	DG4		SCREW AND WASHER, Hex Head, M10x1.5x40
9	06034161	3	5			EH0, EM0			SCREW AND WASHER, Hex Head, .375-16x1.00
10	06101557	1	5			EH0, EM0, EV0			BOLT AND WASHER, Hex Head, M12x1.75x80
11	06100055	4							NUT AND WASHER, Hex Nut-Coned Washer, M12 x 1.75
12	06100055	4							BOLT, Hex Head, .437-14x1.75, (NOT SERVICED)
13	06101062	1	5			EV0	DG4		SCREW AND WASHER, Hex Head, M10x1.5x40

DAKOTA (AN)

SERIES	LINE	BODY	ENGINE	TRANSMISSION
L = Quad Cab L = Regular Cab L = Club Cab	1 = Dakota 2WD 5 = Dakota 4WD	31 = CLUB CAB 2-DR 6.5 FT BOX 61 = REG CAB 6.5 FT BOX 84 = CREW CAB 4-DR W.B.1	EPO = 2.5L 4 Cyl. EHO = 3.9L 6 Cyl. EMO = 5.9L 8 Cyl. EVO = 4.7L Magnum EHC = 3.9L SMPI V6 EML = 5.9L V8 MPI Engine EPE = 2.5L POWER TECH I-4 Cyl. EVA = 4.7L V8 MPI	DDC = TRANSMISSION - 5-SPEED HD MANUAL DG4 = TRANSMISSION-MULTI-SPEED AUTO, 45RFE DGK = TRANSMISSION - 4-SPD. AUTOMATIC,42RE DGT = TRANSMISSION - 4-SPD. AUTOMATIC,46RE DGO = AUTO. TRANS.

Engine Mounting, Rear, N5
Figure 9-145

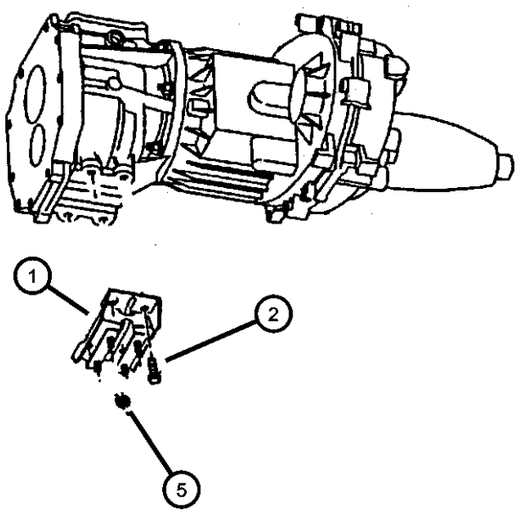

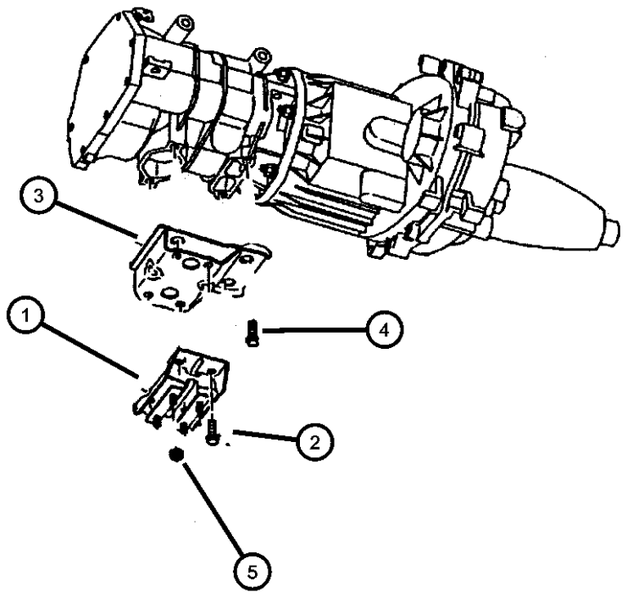

ITEM	PART NUMBER	QTY	LINE	SERIES	BODY	ENGINE	TRANS	TRIM	DESCRIPTION
1	52019998	1	5			EH0, EV0			ISOLATOR, Engine Mount
2									SCREW AND WASHER, Hex Head Locking, .437-14x1.25
	06033358	4	5				DBB		
		4	5				DG0		
3	52058553	1	5			EH0, EM0	DG0		BRACKET, Insulator
4									SCREW AND WASHER, Hex Head Locking, .437-14x1.25
	06033358	4	5				DBB		
		4	5				DG0		
5	06101467	4	5						NUT, Hex Flange, M8x1.25
-6	52020470AB	1	5			EH0, EM0			BRACKET, Transmission Mount, Mounts To Front Axle Housing
-7	06502887	2	5			EH0, EM0, EV0			SCREW AND WASHER, Hex Head, M12x1.75x60

DAKOTA (AN)

SERIES	LINE	BODY	ENGINE	TRANSMISSION
L = Quad Cab	1 = Dakota 2WD	31 = CLUB CAB 2-DR 6.5 FT BOX	EPO = 2.5L 4 Cyl.	DDC = TRANSMISSION - 5-SPEED HD MANUAL
L = Regular Cab	5 = Dakota 4WD	61 = REG CAB 6.5 FT BOX	EHO = 3.9L 6 Cyl.	DG4 = TRANSMISSION-MULTI-SPEED AUTO, 45RFE
L = Club Cab		84 = CREW CAB 4-DR W.B.1	EMO = 5.9L 8 Cyl.	DGK = TRANSMISSION - 4-SPD. AUTOMATIC,42RE
			EVO = 4.7L Magnum	DGT = TRANSMISSION - 4-SPD. AUTOMATIC,46RE
			EHC = 3.9L SMPI V6	DGO = AUTO. TRANS.
			EML = 5.9L V8 MPI Engine	
			EPE = 2.5L POWER TECH I-4 Cyl.	
			EVA = 4.7L V8 MPI	

Engine Mounting, Front, N1
Figure 9-150

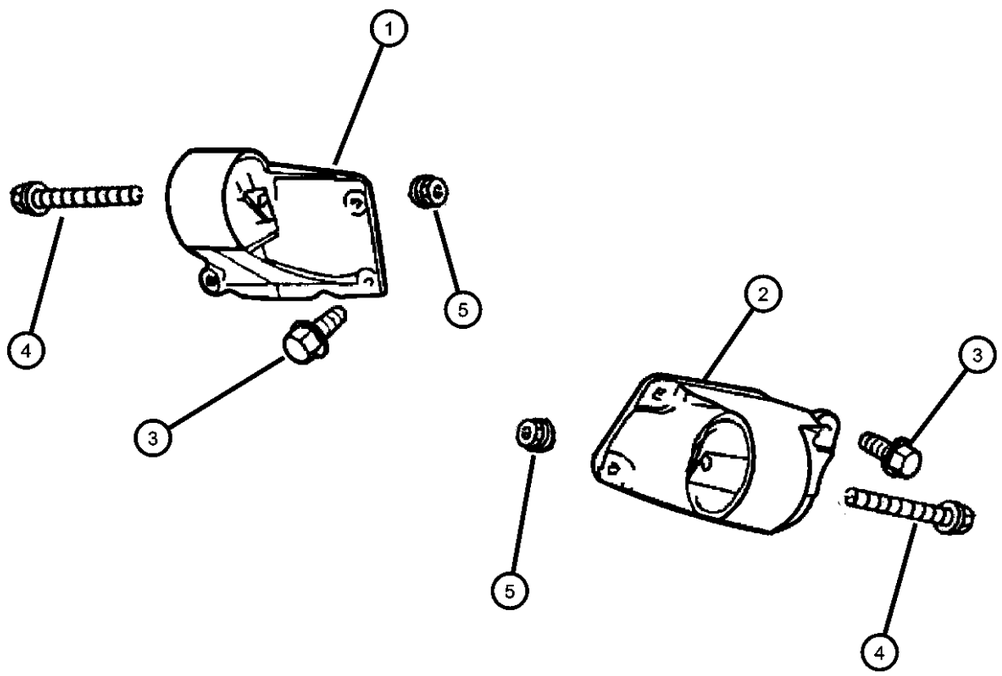

ITEM	PART NUMBER	QTY	LINE	SERIES	BODY	ENGINE	TRANS	TRIM	DESCRIPTION
1	52019961AB	1	1			EV0			INSULATOR, Engine MountLeft
2	52019962AB	1	1			EV0			INSULATOR, Engine MountRight
3	06503699	4	1			EV0			SCREW AND WASHER, Hex Head, M10x1.5x28
4	06502960	2	1						SCREW AND WASHER, Hex Head, M12x1.75x155
5	06502960	2							NUT, M12x1.75, (NOT SERVICED)

DAKOTA (AN)

SERIES	LINE	BODY	ENGINE	TRANSMISSION
L = Quad Cab L = Regular Cab L = Club Cab	1 = Dakota 2WD 5 = Dakota 4WD	31 = CLUB CAB 2-DR 6.5 FT BOX 61 = REG CAB 6.5 FT BOX 84 = CREW CAB 4-DR W.B.1	EPO = 2.5L 4 Cyl. EHO = 3.9L 6 Cyl. EMO = 5.9L 8 Cyl. EVO = 4.7L Magnum EHC = 3.9L SMPI V6 EML = 5.9L V8 MPI Engine EPE = 2.5L POWER TECH I-4 Cyl. EVA = 4.7L V8 MPI	DDC = TRANSMISSION - 5-SPEED HD MANUAL DG4 = TRANSMISSION-MULTI-SPEED AUTO, 45RFE DGK = TRANSMISSION - 4-SPD. AUTOMATIC,42RE DGT = TRANSMISSION - 4-SPD. AUTOMATIC,46RE DGO = AUTO. TRANS.

Engine Mounting, Rear, N1
Figure 9-155

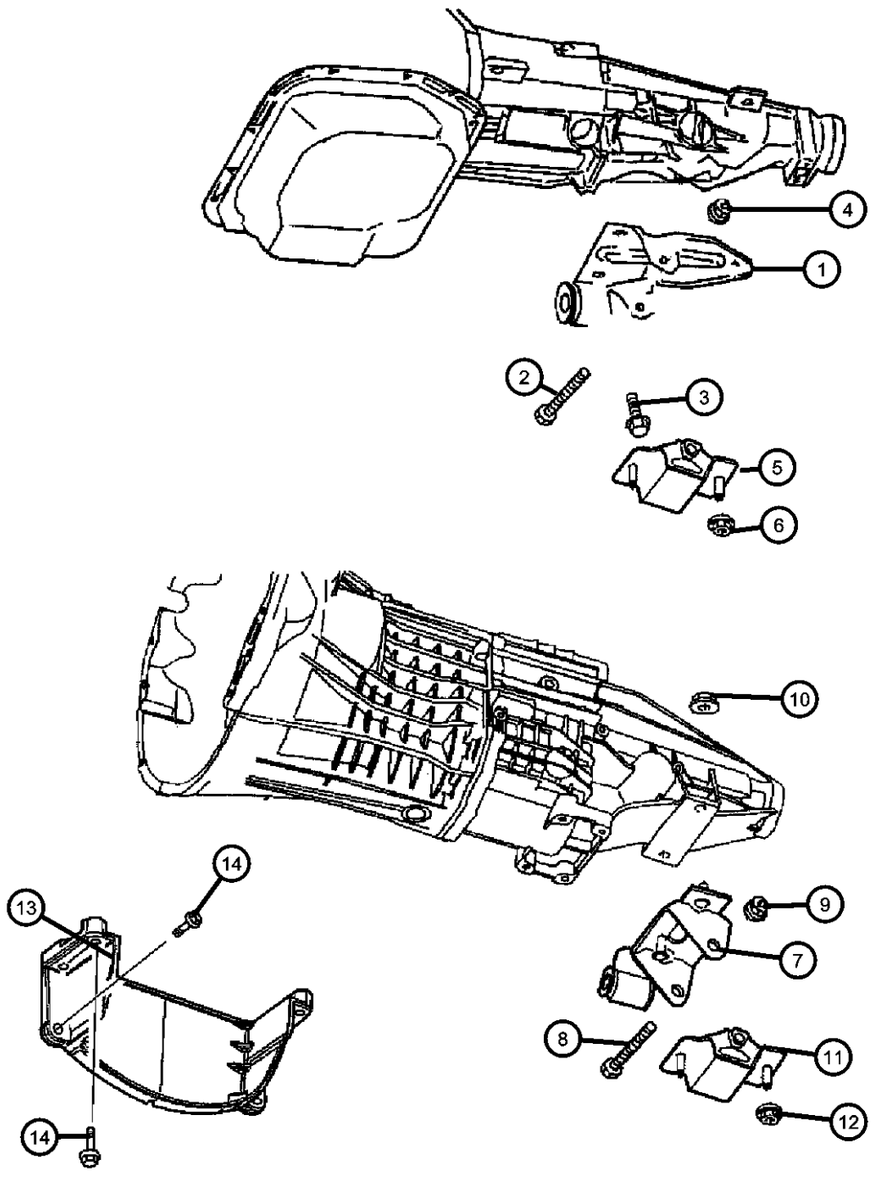

ITEM	PART NUMBER	QTY	LINE	SERIES	BODY	ENGINE	TRANS	TRIM	DESCRIPTION
Note; EHO= All 3.9 Engines, EVO= All 4.7 Engines, EMO= All 5.9 Engines. DBB= Manual Transmissions, DG4 = 45RFE Automatic Transmission, DGO= All Automatic Transmissions									
1	52019959	1	1				DG4		BRACKET, Transmission Mount
2	06033358	3	1			EV0	DG0		SCREW AND WASHER, Hex Head Locking, .437-14x1.25
3	34202606	1	1						BOLT, Hex Head
4	06100055	1	1						NUT AND WASHER, Hex Nut-Coned Washer, M12 x 1.75
5	52019394AB	1	1			EM0, EV0			INSULATOR, Engine Mount
6	06101510	1							NUT, Flange Lock, M10x1.50
7	52058669AB	1	1			EH0, EV0	DBB		BRACKET, Insulator
8	34202606	1	1						BOLT, Hex Head
9	06100055	1	1						NUT AND WASHER, Hex Nut-Coned Washer, M12 x 1.75
10	06101510	2	1				DBB		NUT, Flange Lock, M10x1.50
11	52019394AB	1	1			EM0, EV0			INSULATOR, Engine Mount
12	06101448	2	1						NUT AND WASHER, Hex Nut-Coned Washer, M10 x 1.5
13	53020885	1				EV0	DG0		COVER, Bedplate
14									SCREW AND WASHER, M10x1.50x45.00
	06101985	2	1			EH0, EV0	DBB		
		8	1			EV0	DG0		

DAKOTA (AN)

SERIES	LINE	BODY	ENGINE	TRANSMISSION
L = Quad Cab L = Regular Cab L = Club Cab	1 = Dakota 2WD 5 = Dakota 4WD	31 = CLUB CAB 2-DR 6.5 FT BOX 61 = REG CAB 6.5 FT BOX 84 = CREW CAB 4-DR W.B.1	EPO = 2.5L 4 Cyl. EHO = 3.9L 6 Cyl. EMO = 5.9L 8 Cyl. EVO = 4.7L Magnum EHC = 3.9L SMPI V6 EML = 5.9L V8 MPI Engine EPE = 2.5L POWER TECH I-4 Cyl. EVA = 4.7L V8 MPI	DDC = TRANSMISSION - 5-SPEED HD MANUAL DG4 = TRANSMISSION-MULTI-SPEED AUTO, 45RFE DGK = TRANSMISSION - 4-SPD. AUTOMATIC,42RE DGT = TRANSMISSION - 4-SPD. AUTOMATIC,46RE DGO = AUTO. TRANS.

Engine Mounting, Front, N5
Figure 9-157

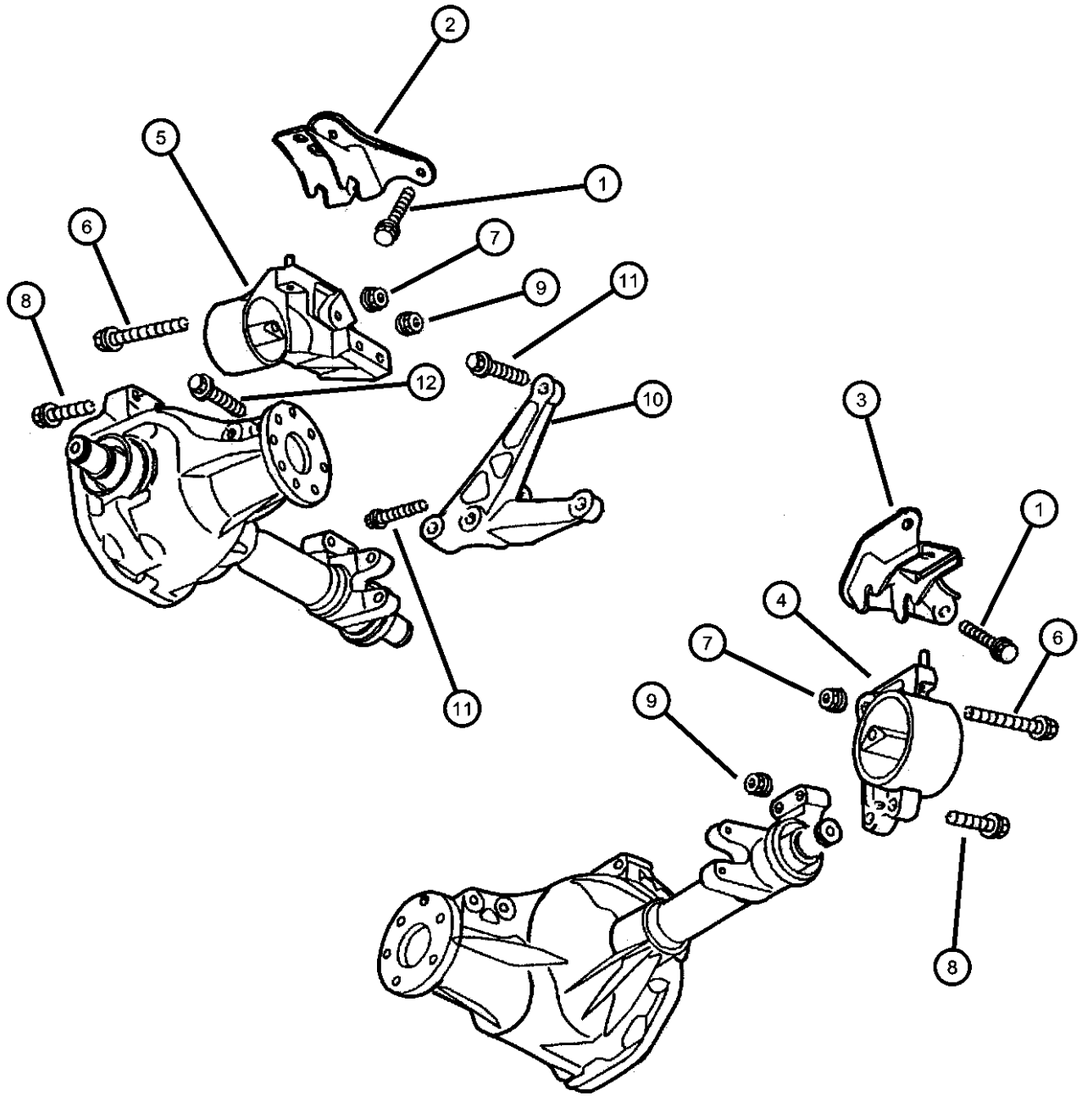

ITEM	PART NUMBER	QTY	LINE	SERIES	BODY	ENGINE	TRANS	TRIM	DESCRIPTION
Note; EHO= All 3.9 Engines, EVO= All 4.7 Engines, EMO= All 5.9 Engines, DG4= 45RFE Automatic Transmission									
1	06503699	3	5			EV0			SCREW AND WASHER, Hex Head, M10x1.5x28
2	52020257AB	1	5			EV0			BRACKET, Engine Mount
3	52019958AC	1	5			EV0			BRACKET, Engine Mount
4	52020244AA	1	5			EV0			INSULATOR, Engine Mount
5	52020243AB	1	5			EV0			INSULATOR, Engine Mount
6	06101557	1	5			EH0, EM0, EV0			BOLT AND WASHER, Hex Head, M12x1.75x80
7	06101557	1							NUT, M12x1.75, (NOT SERVICED)
8	06502725	2	5			EH0, EM0, EV0			BOLT, Hex Flange, M12x1.75x90
9	06502697	2	5						NUT, Hex Flange Lock, M12x1.75
10									BRACKET, Transmission Mount
	52020471AB	1	5			EV0	DBB		
	52020472AB	1	5			EV0	DG4		
11	06101062	2	5			EV0	DG4		SCREW AND WASHER, Hex Head, M10x1.5x40
12	06502887	2	5			EH0, EM0, EV0			SCREW AND WASHER, Hex Head, M12x1.75x60

DAKOTA (AN)

SERIES	LINE	BODY	ENGINE	TRANSMISSION
L = Quad Cab L = Regular Cab L = Club Cab	1 = Dakota 2WD 5 = Dakota 4WD	31 = CLUB CAB 2-DR 6.5 FT BOX 61 = REG CAB 6.5 FT BOX 84 = CREW CAB 4-DR W.B.1	EPO = 2.5L 4 Cyl. EHO = 3.9L 6 Cyl. EMO = 5.9L 8 Cyl. EVO = 4.7L Magnum EHC = 3.9L SMPI V6 EML = 5.9L V8 MPI Engine EPE = 2.5L POWER TECH I-4 Cyl. EVA = 4.7L V8 MPI	DDC = TRANSMISSION - 5-SPEED HD MANUAL DG4 = TRANSMISSION-MULTI-SPEED AUTO, 45RFE DGK = TRANSMISSION - 4-SPD. AUTOMATIC,42RE DGT = TRANSMISSION - 4-SPD. AUTOMATIC,46RE DGO = AUTO. TRANS.

Engine Mounting, Rear, N5
Figure 9-159

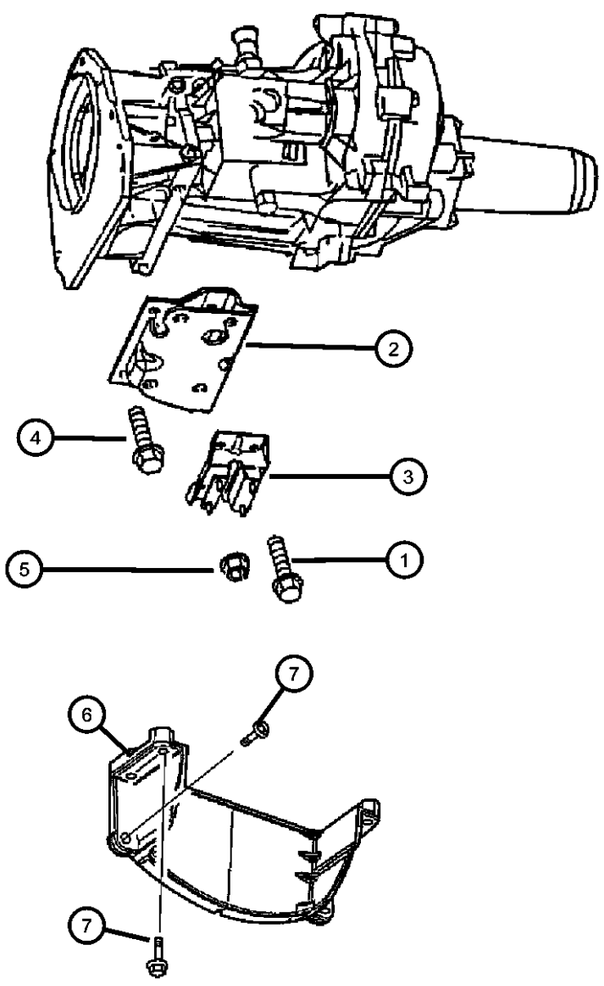

ITEM	PART NUMBER	QTY	LINE	SERIES	BODY	ENGINE	TRANS	TRIM	DESCRIPTION
1									SCREW AND WASHER, Hex Head Locking, .437-14x1.25
	06033358	4	5				DBB		
		4	5				DG0		
2	52019960AB	1	5			EV0	DG4		BRACKET, Transmission Mount
3	52019998	1	5			EH0, EV0			ISOLATOR, Engine Mount
4	06503699	3	5			EV0			SCREW AND WASHER, Hex Head, M10x1.5x28
5	06101467	4	5						NUT, Hex Flange, M8x1.25
6	53020885	1				EV0	DG0		COVER, Bedplate
7									SCREW AND WASHER, M10x1.50x45.00
	06101985	5				EV0			
		2	1			EH0, EV0	DDC		

DAKOTA (AN)

SERIES	LINE	BODY	ENGINE	TRANSMISSION
L = Quad Cab L = Regular Cab L = Club Cab	1 = Dakota 2WD 5 = Dakota 4WD	31 = CLUB CAB 2-DR 6.5 FT BOX 61 = REG CAB 6.5 FT BOX 84 = CREW CAB 4-DR W.B.1	EPO = 2.5L 4 Cyl. EHO = 3.9L 6 Cyl. EMO = 5.9L 8 Cyl. EVO = 4.7L Magnum EHC = 3.9L SMPI V6 EML = 5.9L V8 MPI Engine EPE = 2.5L POWER TECH I-4 Cyl. EVA = 4.7L V8 MPI	DDC = TRANSMISSION - 5-SPEED HD MANUAL DG4 = TRANSMISSION-MULTI-SPEED AUTO, 45RFE DGK = TRANSMISSION - 4-SPD. AUTOMATIC,42RE DGT = TRANSMISSION - 4-SPD. AUTOMATIC,46RE DGO = AUTO. TRANS.

AR = use ase required - = Non illustrrated part

Engine Mounting, Front, N5
Figure 9-160

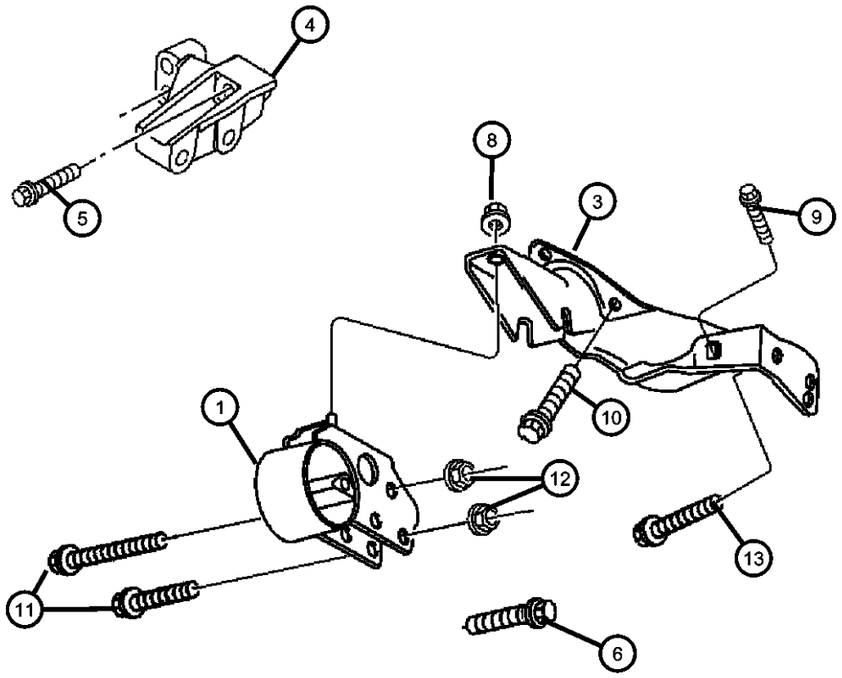

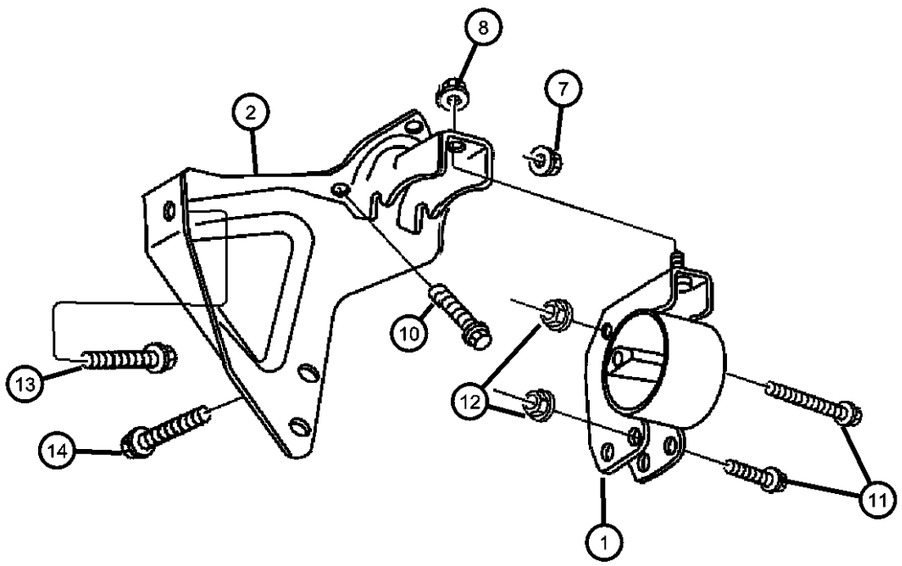

ITEM	PART NUMBER	QTY	LINE	SERIES	BODY	ENGINE	TRANS	TRIM	DESCRIPTION
Note; EHO= All 3.9 Engines, EVO= All 4.7 Engines, EMO= All 5.9 Engines, DG4= 45RFE Automatic Transmission									
1									INSULATOR, Engine Mount
	52020243AB	1	5			EM0			Left
	52020342AA	1	5			EM0			Right
2	52020346AB	1	5			EH0, EM0			BRACKET, Engine MountRight
3	52020247AB	1	5			EH0, EM0			BRACKET, Engine MountLeft
4	52020470AB	1	5			EH0, EM0			BRACKET, Transmission Mount, Pinion Nose To Transmission
5	06502887	2	5			EH0, EM0, EV0			SCREW AND WASHER, Hex Head, M12x1.75x60
6	06502960	2							SCREW AND WASHER, Hex Head, M12x1.75x155
7	06502960	2							NUT, M12x1.75, (NOT SERVICED)
8	06101761	1	5			EH0, EM0, EV0			NUT, Coned Washer, M10 x 1.50
9	06101062	1	5			EV0	DG4		SCREW AND WASHER, Hex Head, M10x1.5x40
10	06034161	3	5			EH0, EM0			SCREW AND WASHER, Hex Head, .375-16x1.00
11	06101557	1	5			EH0, EM0, EV0			BOLT AND WASHER, Hex Head, M12x1.75x80
12	06100055	4							NUT AND WASHER, Hex Nut-Coned Washer, M12 x 1.75
13	06100055	4							SCREW, [.437-14X1.750], (NOT SERVICED)
14	06101062	1	5			EV0	DG4		SCREW AND WASHER, Hex Head, M10x1.5x40

DAKOTA (AN)

SERIES	LINE	BODY	ENGINE	TRANSMISSION
L = Quad Cab L = Regular Cab L = Club Cab	1 = Dakota 2WD 5 = Dakota 4WD	31 = CLUB CAB 2-DR 6.5 FT BOX 61 = REG CAB 6.5 FT BOX 84 = CREW CAB 4-DR W.B.1	EPO = 2.5L 4 Cyl. EHO = 3.9L 6 Cyl. EMO = 5.9L 8 Cyl. EVO = 4.7L Magnum EHC = 3.9L SMPI V6 EML = 5.9L V8 MPI Engine EPE = 2.5L POWER TECH I-4 Cyl. EVA = 4.7L V8 MPI	DDC = TRANSMISSION - 5-SPEED HD MANUAL DG4 = TRANSMISSION-MULTI-SPEED AUTO, 45RFE DGK = TRANSMISSION - 4-SPD. AUTOMATIC,42RE DGT = TRANSMISSION - 4-SPD. AUTOMATIC,46RE DGO = AUTO. TRANS.

Engine Mounting, Rear, N5
Figure 9-165

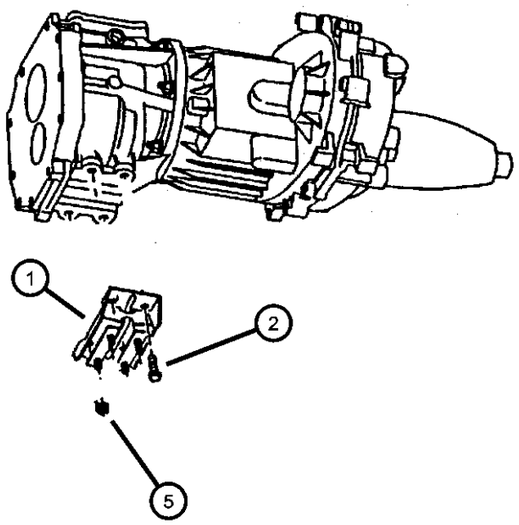

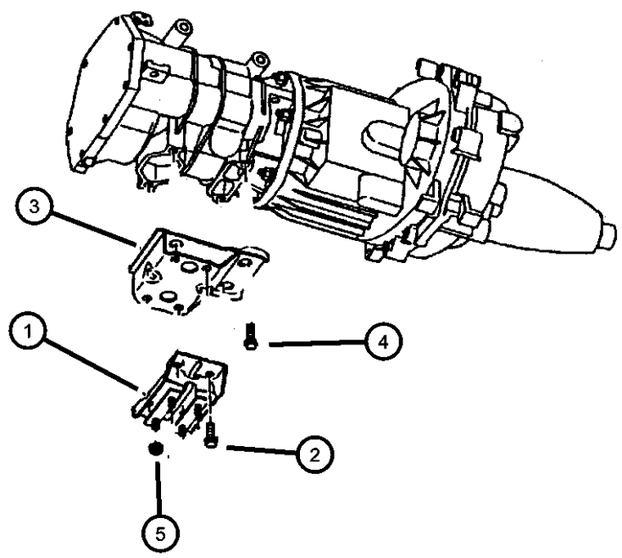

ITEM	PART NUMBER	QTY	LINE	SERIES	BODY	ENGINE	TRANS	TRIM	DESCRIPTION
Note; EHO= All 3.9 Engines, EMO= All 5.9 Engines, DBB= Manual Transmissions, DGO= All Automatic Transmissions									
1	52019998	1	5			EH0, EV0			ISOLATOR, Engine Mount
2									SCREW AND WASHER, Hex Head Locking, .437-14x1.25
	06033358	4	5				DBB		
		4	5				DG0		
3	52058553	1	5			EH0, EM0	DG0		BRACKET, Insulator
4									SCREW AND WASHER, Hex Head Locking, .437-14x1.25
	06033358	4	5				DBB		
		4	5				DG0		
5	06101467	4	5						NUT, Hex Flange, M8x1.25
-6	52020470AB	1	5			EH0, EM0			BRACKET, Transmission Mount, Pinion Nose To Transmission

DAKOTA (AN)

SERIES	LINE	BODY	ENGINE	TRANSMISSION
L = Quad Cab	1 = Dakota 2WD	31 = CLUB CAB 2-DR 6.5 FT BOX	EPO = 2.5L 4 Cyl.	DDC = TRANSMISSION - 5-SPEED HD MANUAL
L = Regular Cab	5 = Dakota 4WD	61 = REG CAB 6.5 FT BOX	EHO = 3.9L 6 Cyl.	DG4 = TRANSMISSION-MULTI-SPEED AUTO, 45RFE
L = Club Cab		84 = CREW CAB 4-DR W.B.1	EMO = 5.9L 8 Cyl.	DGK = TRANSMISSION - 4-SPD. AUTOMATIC,42RE
			EVO = 4.7L Magnum	DGT = TRANSMISSION - 4-SPD. AUTOMATIC,46RE
			EHC = 3.9L SMPI V6	DGO = AUTO. TRANS.
			EML = 5.9L V8 MPI Engine	
			EPE = 2.5L POWER TECH I-4 Cyl.	
			EVA = 4.7L V8 MPI	

Mounting Engine Front, N1, 5.9L (EML)
Figure 9-170

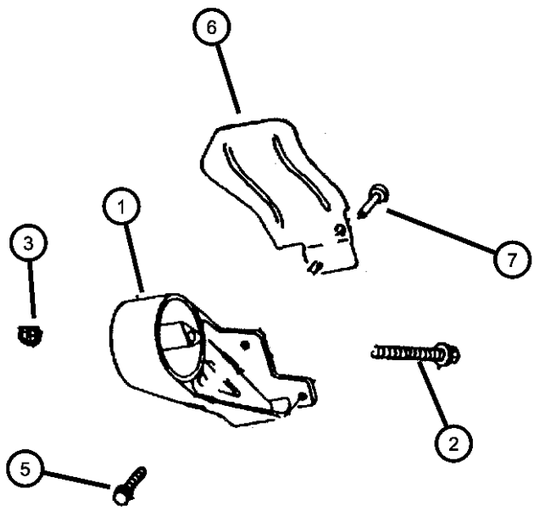

ITEM	PART NUMBER	QTY	LINE	SERIES	BODY	ENGINE	TRANS	TRIM	DESCRIPTION
Note; EHO= All 3.9 Engines EMO= All 5.9 Engines									
1									INSULATOR, Engine Mount
	52021009	1	1			EM0			Left
	52022008	1	1			EM0			Right
2	06502960	2							SCREW AND WASHER, Hex Head, M12x1.75x155
3	06502960	2							NUT, M12x1.75, (NOT SERVICED)
4	06035212	3	1			EM0, EP0			SCREW, Hex Flange Head, .375-16x1.125
5	06035212	3	1			EM0, EP0			SCREW, Hex Flange Head, .375-16x1.125
6									SHIELD, Engine Mount
	57008125	1	1			EH0, EM0			Left
	57008126	1	1			EM0			Right
7	57008126	1							SCREW, (NOT SERVICED)

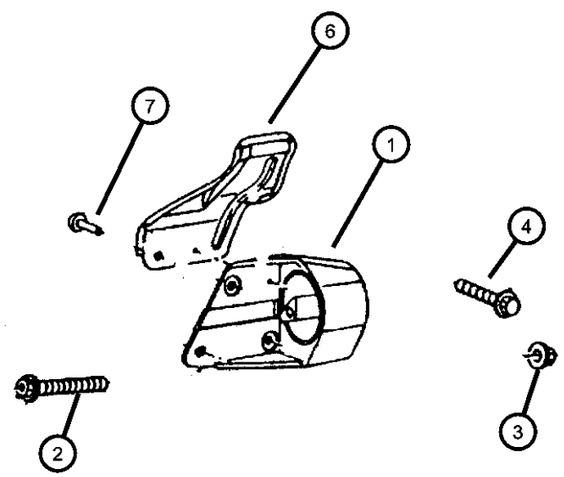

DAKOTA (AN)

SERIES	LINE	BODY	ENGINE	TRANSMISSION
L = Quad Cab L = Regular Cab L = Club Cab	1 = Dakota 2WD 5 = Dakota 4WD	31 = CLUB CAB 2-DR 6.5 FT BOX 61 = REG CAB 6.5 FT BOX 84 = CREW CAB 4-DR W.B.1	EPO = 2.5L 4 Cyl. EHO = 3.9L 6 Cyl. EMO = 5.9L 8 Cyl. EVO = 4.7L Magnum EHC = 3.9L SMPI V6 EML = 5.9L V8 MPI Engine EPE = 2.5L POWER TECH I-4 Cyl. EVA = 4.7L V8 MPI	DDC = TRANSMISSION - 5-SPEED HD MANUAL DG4 = TRANSMISSION-MULTI-SPEED AUTO, 45RFE DGK = TRANSMISSION - 4-SPD. AUTOMATIC,42RE DGT = TRANSMISSION - 4-SPD. AUTOMATIC,46RE DGO = AUTO. TRANS.

Mounting Engine Rear, N1, 5.9L (EML)
Figure 9-175

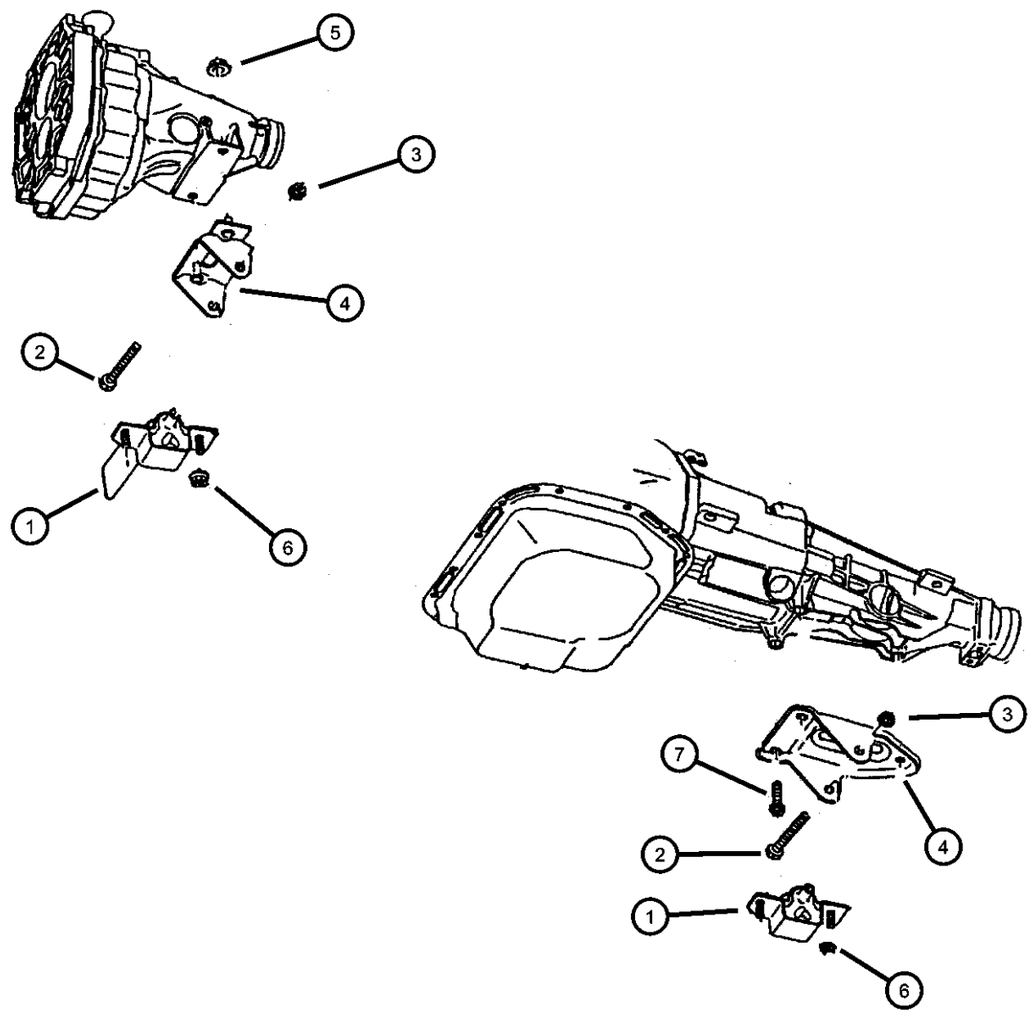

ITEM	PART NUMBER	QTY	LINE	SERIES	BODY	ENGINE	TRANS	TRIM	DESCRIPTION
Note; EHO= All 3.9 Engines EMO= All 5.9 Engines DBB= Manual Transmissions DGO= Automatic Transmissions									
1	52019394AD	1	1			EM0, EV0			INSULATOR, Engine Mount
2	34202606	1	1						BOLT, Hex Head
3	06100055	1	1						NUT AND WASHER, Hex Nut-Coned Washer, M12 x 1.75
4	52058636AC	1	1			EH0, EM0	DG0		BRACKET, Insulator
5	52058636AC	1							NUT, M10x1.50, (NOT SERVICED)
6	06101448	2	1						NUT AND WASHER, Hex Nut-Coned Washer, M10 x 1.5
7	06033358	3	1			EH0, EM0	DG0		SCREW AND WASHER, Hex Head Locking, .437-14x1.25

DAKOTA (AN)

SERIES	LINE	BODY	ENGINE	TRANSMISSION
L = Quad Cab L = Regular Cab L = Club Cab	1 = Dakota 2WD 5 = Dakota 4WD	31 = CLUB CAB 2-DR 6.5 FT BOX 61 = REG CAB 6.5 FT BOX 84 = CREW CAB 4-DR W.B.1	EPO = 2.5L 4 Cyl. EHO = 3.9L 6 Cyl. EMO = 5.9L 8 Cyl. EVO = 4.7L Magnum EHC = 3.9L SMPI V6 EML = 5.9L V8 MPI Engine EPE = 2.5L POWER TECH I-4 Cyl. EVA = 4.7L V8 MPI	DDC = TRANSMISSION - 5-SPEED HD MANUAL DG4 = TRANSMISSION-MULTI-SPEED AUTO, 45RFE DGK = TRANSMISSION - 4-SPD. AUTOMATIC,42RE DGT = TRANSMISSION - 4-SPD. AUTOMATIC,46RE DGO = AUTO. TRANS.

Group - 2.5L4

Engine 2.5L Four Cylinder

2.5L4-200
Cylinder Head

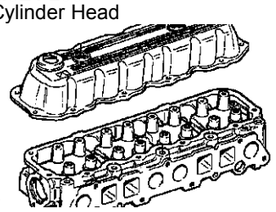

2.5L4-300
Cylinder Block

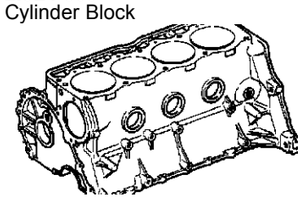

2.5L4-400
Crankshaft, Piston and Drive Plate

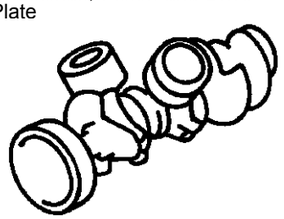

2.5L4-500
Camshafts & Valves

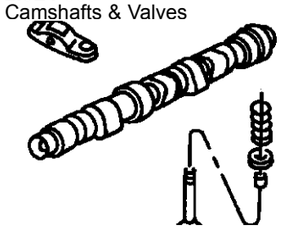

2.5L4-600
Timing Belt and Cover

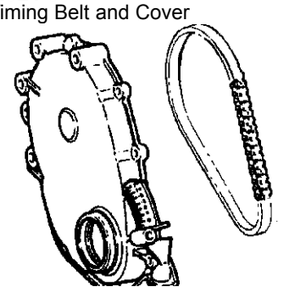

2.5L4-700
Engine Oiling

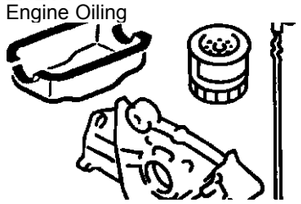

2.5L4-800
Manifolds

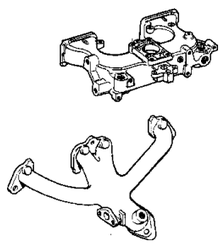

2.5L4-900
Crankcase Ventilation

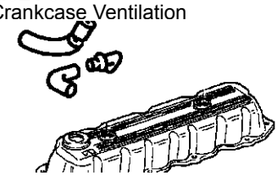

Group - 2.5L4 Engine 2.5L Four Cylinder

Illustration Title — Group-Fig. No.

Cylinder Head
Cylinder Head ..... Fig. 2.5L4 - 215

Cylinder Block
Cylinder Block ..... Fig. 2.5L4 - 315

Crankshaft, Piston and Drive Plate
Crankshaft, Piston and Torque Converter ..... Fig. 2.5L4 - 415

Camshafts & Valves
Camshaft and Valves ..... Fig. 2.5L4 - 515

Timing Belt and Cover
Timing Belt and Cover ..... Fig. 2.5L4 - 615

Engine Oiling
Engine Oiling ..... Fig. 2.5L4 - 715

Manifolds
Manifold, Intake and Exhaust ..... Fig. 2.5L4 - 815

Crankcase Ventilation
Crankcase Ventilation ..... Fig. 2.5L4 - 915

Cylinder Head
Figure 2.5L4-215

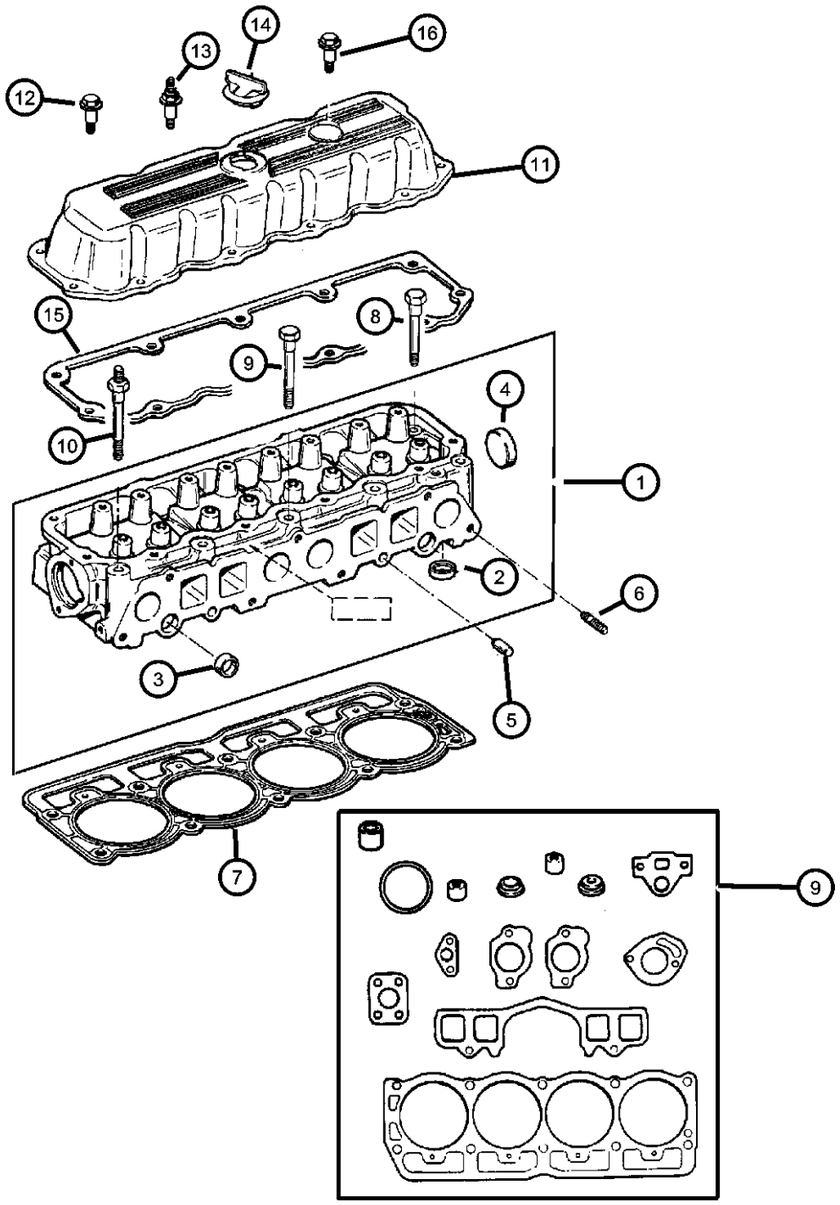

ITEM	PART NUMBER	QTY	LINE	SERIES	BODY	ENGINE	TRANS	TRIM	DESCRIPTION
1	33007115AB	1				EP0			HEAD, Cylinder
2	33007142	4				EP0			SEAT, Exhaust Valve
3	J3172319	4				EP0			PLUG, Cylinder Block Oil Hole
4	J3105394	1				EP0			PLUG, Cylinder Block Oil Hole
5	J3172318	2				EP0			DOWEL, Cylinder Head To Intake
6	06036193AA	2				EP0			STUD, .375-16/.375-24x1.75
7	53009549AB	1				EP0			GASKET, Cylinder Head
8	06035514	5				EP0			BOLT, Cylinder Head
9	04798992AC	1				EP0			GASKET PACKAGE, Engine
10	06035516	4				EP0			STUD, Double Ended, .50-13/.437-14x6.00
11	53010428AB	1				EP0			COVER, Cylinder Head
12	53010428AB	1							BOLT, Hex Head, .250-20x1.130, (NOT SERVICED)
13	06035968AA	10				EP0			STUD, .250-20x2.00
14	53020555	1				EP0			CAP, Oil Filler
15	53020555	1							GASKET, Cylinder Cover, RTV Sealant, (NOT SERVICED)
16	53020555	1							STUD, Double Ended, .25-20x1.97, (NOT REQUIRED)

DAKOTA (AN)

SERIES	LINE	BODY	ENGINE	TRANSMISSION
L = Quad Cab L = Regular Cab L = Club Cab	1 = Dakota 2WD 5 = Dakota 4WD	31 = CLUB CAB 2-DR 6.5 FT BOX 61 = REG CAB 6.5 FT BOX 84 = CREW CAB 4-DR W.B.1	EPO = 2.5L 4 Cyl. EHO = 3.9L 6 Cyl. EMO = 5.9L 8 Cyl. EVO = 4.7L Magnum EHC = 3.9L SMPI V6 EML = 5.9L V8 MPI Engine EPE = 2.5L POWER TECH I-4 Cyl. EVA = 4.7L V8 MPI	DDC = TRANSMISSION - 5-SPEED HD MANUAL DG4 = TRANSMISSION-MULTI-SPEED AUTO, 45RFE DGK = TRANSMISSION - 4-SPD. AUTOMATIC,42RE DGT = TRANSMISSION - 4-SPD. AUTOMATIC,46RE DGO = AUTO. TRANS.

AR = use ase required - = Non illustrrated part

Cylinder Block
Figure 2.5L4-315

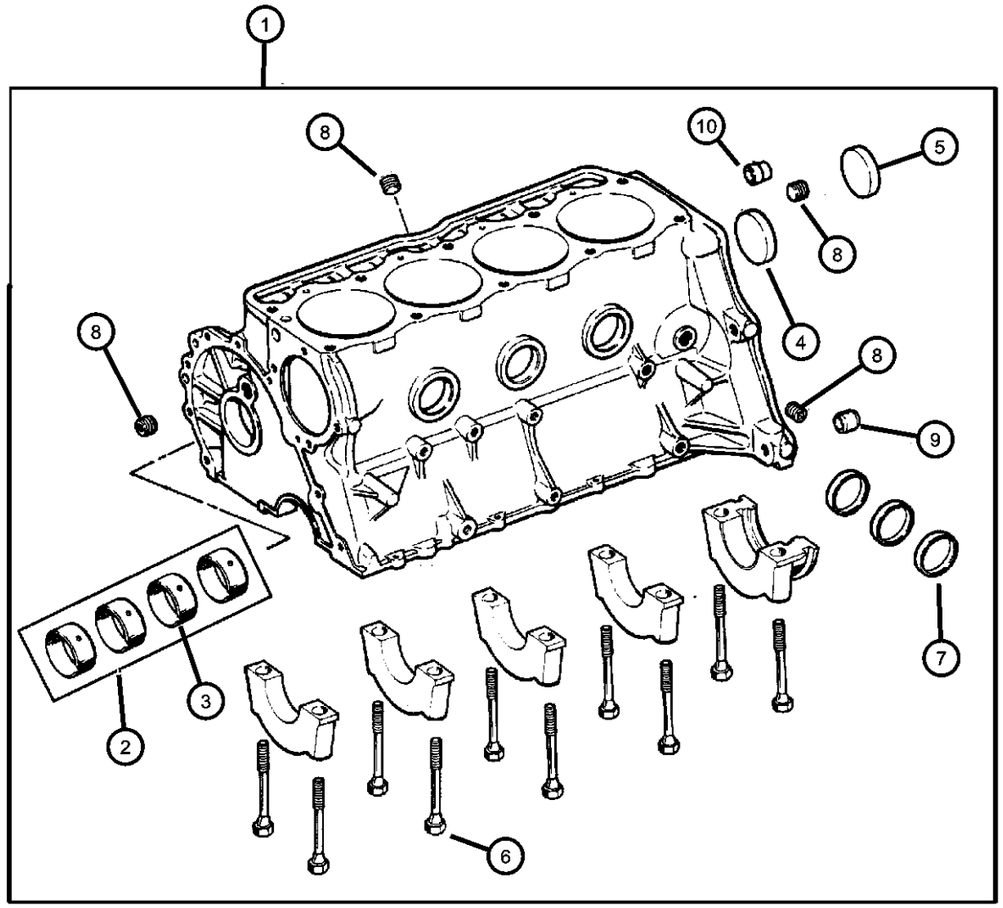

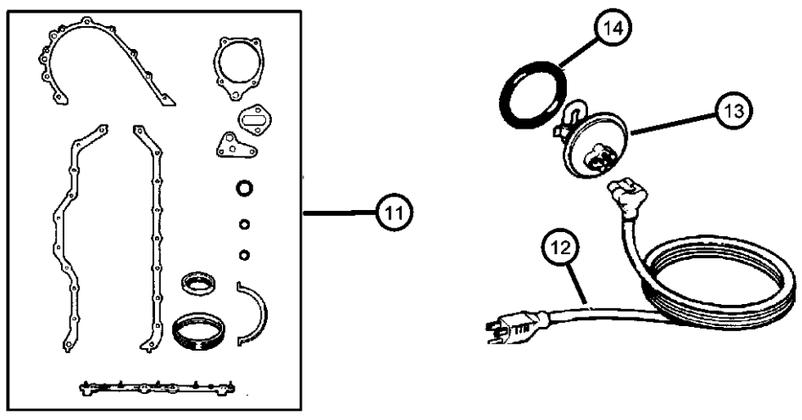

ITEM	PART NUMBER	QTY	LINE	SERIES	BODY	ENGINE	TRANS	TRIM	DESCRIPTION

NOTE: Packages Do Not Contain Gaskets For All Required Sealing. R.T.V. Sealer And Gasket Eliminator Must Also Be Used.
GASKET PACKAGE, Engine Upper - 04798992
NOTE: EP0=All 2.5L Gas Engines

1	04856744	1				EP0			BLOCK, Short
2	J3205711	1				EP0			BEARING KIT, Camshaft, Standard, (NOT REQUIRED)
3	04636985AB	1				EP0			BEARING PACKAGE, Camshaft, Standard Size
4	J3172313	1				EP0			PLUG, Camshaft
5	53020465	1				EP0			PLUG, Cylinder Block
6	J4006948	10				EP0			BOLT, Hex Head, .50-13x2.97
7	J4006580	3				EP0			PLUG, Cylinder Block Oil Hole
8	06034166	3				EP0			PLUG, Cylinder Block Oil Hole
9	J4006953	1				EP0			DOWEL, Block To Cylinder Head
10	J3241332	1				EP0			DOWEL, Clutch Housing To Block
11	04713023AC	1				EP0			GASKET PACKAGE, Engine
12	56020234	1							CORD, Engine Block Heater
13	56041304AB	1				EV0			HEATER, Engine Block
14									O RING, Engine Block Heater
	06501445	AR				EH0, EM0, EV0			M34.67 4.36
	06501446	1				EH0, EM0			M34.65 3.60

DAKOTA (AN)

SERIES	LINE	BODY	ENGINE	TRANSMISSION
L = Quad Cab	1 = Dakota 2WD	31 = CLUB CAB 2-DR 6.5 FT BOX	EPO = 2.5L 4 Cyl.	DDC = TRANSMISSION - 5-SPEED HD MANUAL
L = Regular Cab	5 = Dakota 4WD	61 = REG CAB 6.5 FT BOX	EHO = 3.9L 6 Cyl.	DG4 = TRANSMISSION-MULTI-SPEED AUTO, 45RFE
L = Club Cab		84 = CREW CAB 4-DR W.B.1	EMO = 5.9L 8 Cyl.	DGK = TRANSMISSION - 4-SPD. AUTOMATIC,42RE
			EVO = 4.7L Magnum	DGT = TRANSMISSION - 4-SPD. AUTOMATIC,46RE
			EHC = 3.9L SMPI V6	DGO = AUTO. TRANS.
			EML = 5.9L V8 MPI Engine	
			EPE = 2.5L POWER TECH I-4 Cyl.	
			EVA = 4.7L V8 MPI	

AR = use ase required - = Non illustrrated part

Crankshaft, Piston and Torque Converter
Figure 2.5L4-415

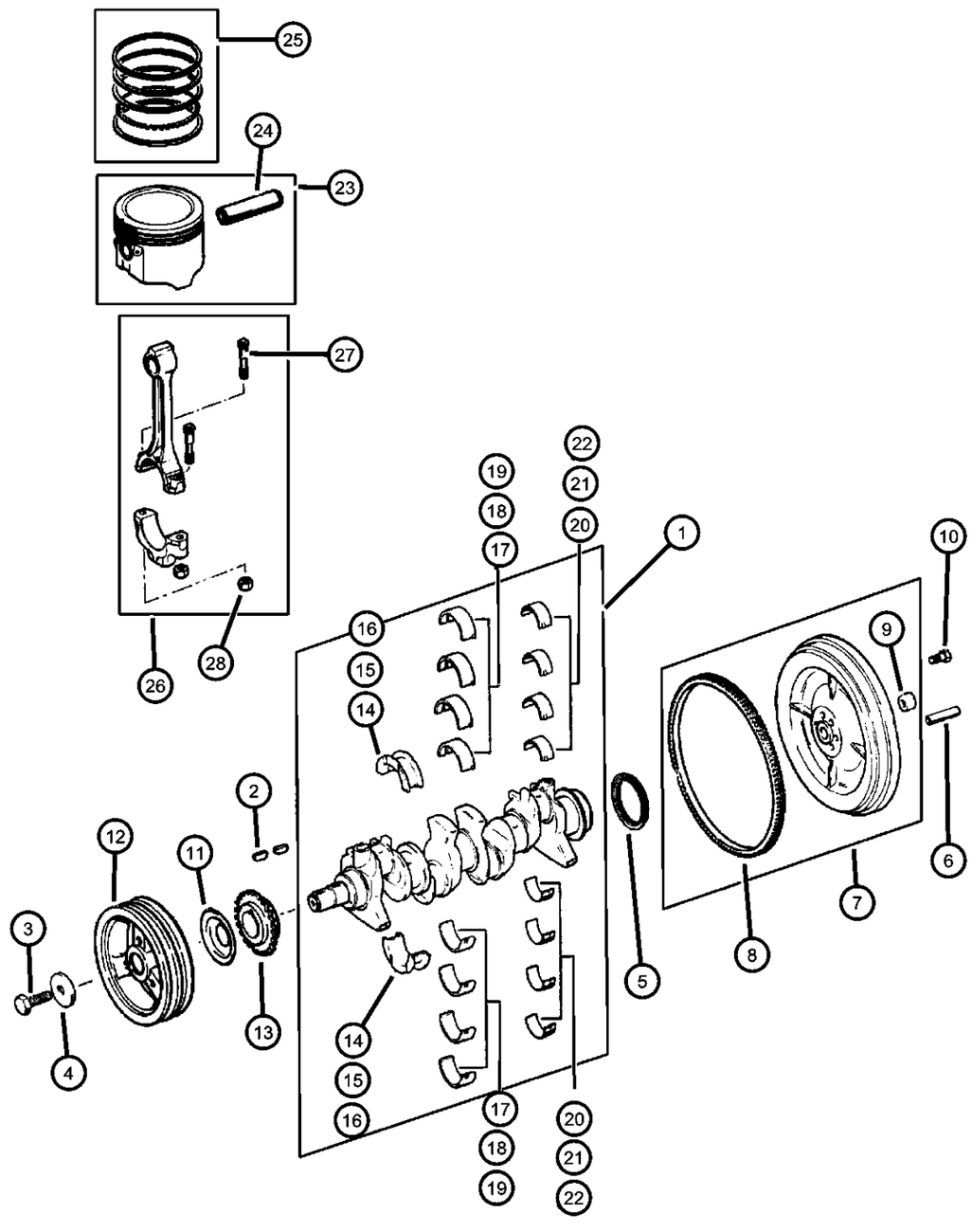

ITEM	PART NUMBER	QTY	LINE	SERIES	BODY	ENGINE	TRANS	TRIM	DESCRIPTION
1	04713051	1				EP0			CRANKSHAFT
2	06034749	1				EP0			KEY, Crankshaft Sprocket
3	00182776	1				EP0			BOLT
4	J3230155	1				EP0			WASHER, Plain
5	33004143	1				EP0			SEAL, Rear Main Crankshaft
6	06031923	3				EP0	DBB		DOWEL, .250 x 1.05
7	05014273AA	1				EP0	DBB		FLYWHEEL
8	J3241718	1				EP0	DBB		GEAR, Ring
9	53009178AB	1				EP0	DBB		BEARING, Pilot
10	J4007123	6				EP0	DBB		BOLT, Flywheel
11	J3173076	1				EP0			SLINGER, Oil
12	33002879	1				EP0			DAMPER, Crankshaft
13	33004020	1				EP0			GEAR, Crankshaft
14	83507084	1				EP0			BEARING PACKAGE, Crankshaft Thrust, Standard Size
15	83507086	AR				EP0			BEARING PACKAGE, Crankshaft Thrust, .001" Undersize
16	83507090	AR				EP0			BEARING PACKAGE, Crankshaft Thrust, .010" Undersize
17	83507079	4				EP0			BEARING PACKAGE, Crankshaft, Standard
18	83507080	AR				EP0			BEARING PACKAGE, Crankshaft, .001 Undersize
19	83507083	AR				EP0			BEARING PACKAGE, Crankshaft, .010 Undersize
20	83500300	8				EP0			BEARING KIT, Connecting Rod, Standard
21	83501397	AR				EP0			BEARING KIT, Connecting Rod, .001 Undersize
22	83500301	AR				EP0			BEARING KIT, Connecting Rod, .010 Undersize
23									PISTON PIN AND ROD
	04798329	4				EP0			B Size, 3.8746
	04798330	4				EP0			C Size, 3.8752
	04798331	4				EP0			D Size, 3.8754
	04798332	4				EP0			E Size, 3.8758
	04798333	4				EP0			F Size, 3.8762

DAKOTA (AN)

SERIES	LINE	BODY	ENGINE	TRANSMISSION
L = Quad Cab L = Regular Cab L = Club Cab	1 = Dakota 2WD 5 = Dakota 4WD	31 = CLUB CAB 2-DR 6.5 FT BOX 61 = REG CAB 6.5 FT BOX 84 = CREW CAB 4-DR W.B.1	EPO = 2.5L 4 Cyl. EHO = 3.9L 6 Cyl. EMO = 5.9L 8 Cyl. EVO = 4.7L Magnum EHC = 3.9L SMPI V6 EML = 5.9L V8 MPI Engine EPE = 2.5L POWER TECH I-4 Cyl. EVA = 4.7L V8 MPI	DDC = TRANSMISSION - 5-SPEED HD MANUAL DG4 = TRANSMISSION-MULTI-SPEED AUTO, 45RFE DGK = TRANSMISSION - 4-SPD. AUTOMATIC,42RE DGT = TRANSMISSION - 4-SPD. AUTOMATIC,46RE DGO = AUTO. TRANS.

AR = use ase required - = Non illustrrated part

Crankshaft, Piston and Torque Converter
Figure 2.5L4-415

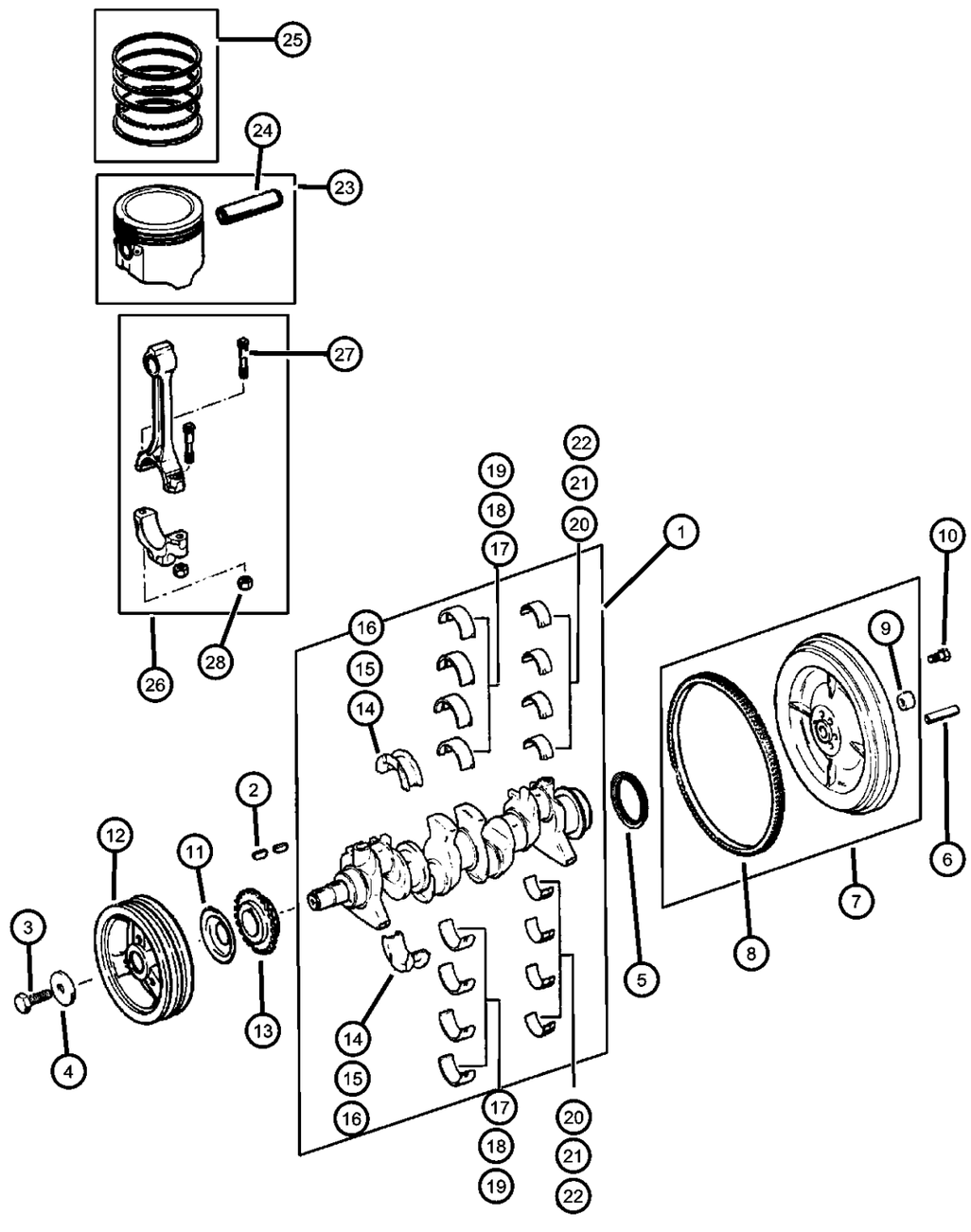

ITEM	PART NUMBER	QTY	LINE	SERIES	BODY	ENGINE	TRANS	TRIM	DESCRIPTION
24	04798333	4							PIN, Piston, Serviced in Piston Assembly, (NOT SERVICED),
25	04798324	1				EP0			RING PACKAGE, Piston, Standard Size Complete Engine
26	04798324	1							ROD, Connecting, Serviced in Piston Assembly, (NOT SERVICED)
27	53020123	8				EP0			BOLT, Connecting Rod
28	J4006385	8				EP0			NUT, Hex Flange, .3437-24

DAKOTA (AN)

SERIES	LINE	BODY	ENGINE	TRANSMISSION
L = Quad Cab L = Regular Cab L = Club Cab	1 = Dakota 2WD 5 = Dakota 4WD	31 = CLUB CAB 2-DR 6.5 FT BOX 61 = REG CAB 6.5 FT BOX 84 = CREW CAB 4-DR W.B.1	EPO = 2.5L 4 Cyl. EHO = 3.9L 6 Cyl. EMO = 5.9L 8 Cyl. EVO = 4.7L Magnum EHC = 3.9L SMPI V6 EML = 5.9L V8 MPI Engine EPE = 2.5L POWER TECH I-4 Cyl. EVA = 4.7L V8 MPI	DDC = TRANSMISSION - 5-SPEED HD MANUAL DG4 = TRANSMISSION-MULTI-SPEED AUTO, 45RFE DGK = TRANSMISSION - 4-SPD. AUTOMATIC,42RE DGT = TRANSMISSION - 4-SPD. AUTOMATIC,46RE DGO = AUTO. TRANS.

Camshaft and Valves
Figure 2.5L4-515

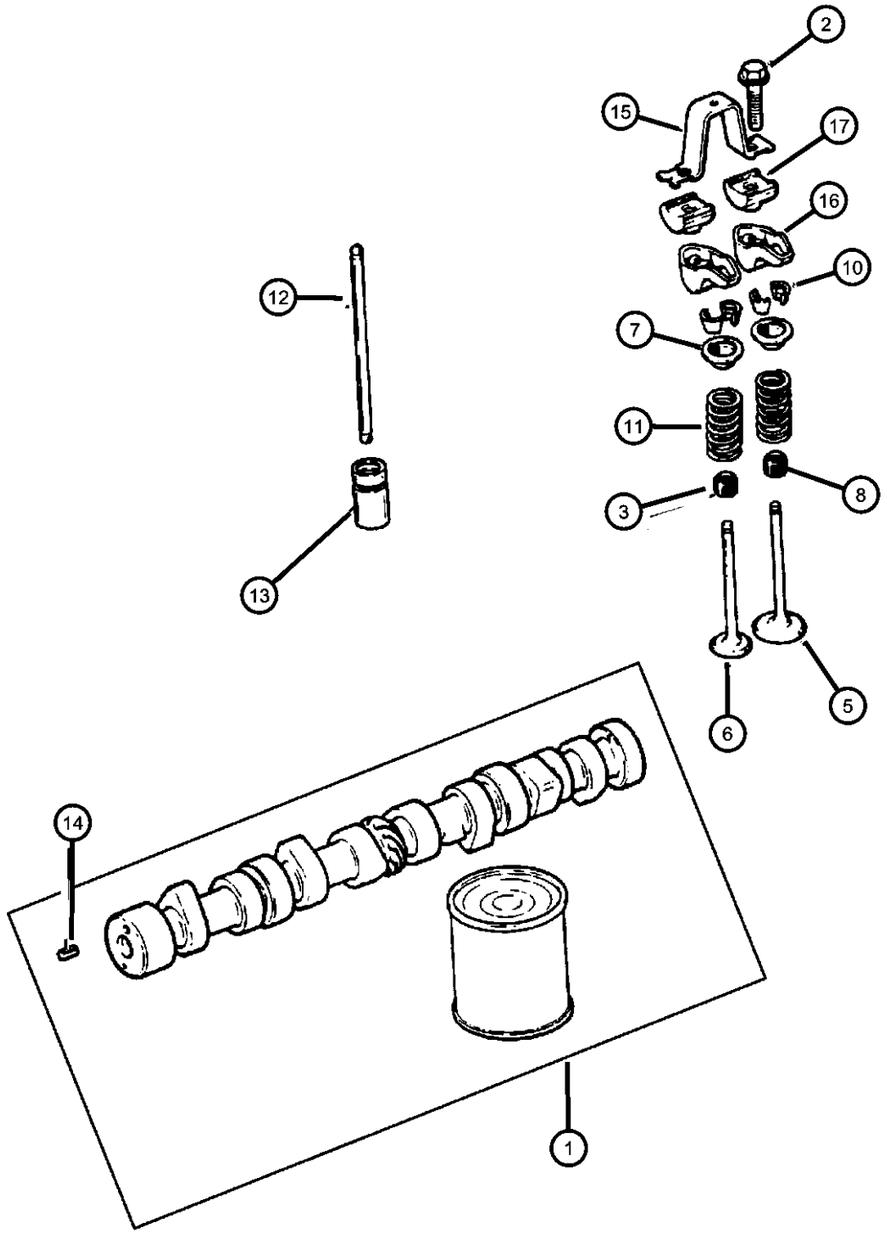

ITEM	PART NUMBER	QTY	LINE	SERIES	BODY	ENGINE	TRANS	TRIM	DESCRIPTION
1	53020497	1				EP0			CAMSHAFT, Engine
2	J9425708	8				EP0			BOLT, Hex Flange Head, .312-18x1.25
3	53009887	4				EP0			SEAL, Valve Guide
-4	33002733	AR				EH0			SEAL, Valve Guide, .015" Oversize
5	53010512AA	4				EP0			VALVE, Intake, Standard
6	53010513AA	4				EP0			VALVE, Exhaust, Standard
7	53010514AA	8				EP0			RETAINER, Valve Spring
8	53009886	4				EP0			SEAL, Valve Guide
-9	33003016	AR				EH0			SEAL, Valve Guide, .015" Oversize
10	53010515AA	16				EP0			LOCK, Valve Spring Retainer
11	53010388	8				EP0			SPRING, Valve
12	J3241709	8				EP0			PUSH ROD, FRONT SUSPENSION
13	04740269	8				EP0			TAPPET, Valve
14	J0456384	1				EP0			DOWEL, Camshaft Sprocket
15	J3236513	4				EP0			BRIDGE, Rocker Arm
16	J3242393	8				EP0			ROCKER ARM, Valve
17	J3235090	8				EP0			PIVOT, Rocker Arm

DAKOTA (AN)

SERIES	LINE	BODY	ENGINE	TRANSMISSION
L = Quad Cab	1 = Dakota 2WD	31 = CLUB CAB 2-DR 6.5 FT BOX	EPO = 2.5L 4 Cyl.	DDC = TRANSMISSION - 5-SPEED HD MANUAL
L = Regular Cab	5 = Dakota 4WD	61 = REG CAB 6.5 FT BOX	EHO = 3.9L 6 Cyl.	DG4 = TRANSMISSION-MULTI-SPEED AUTO, 45RFE
L = Club Cab		84 = CREW CAB 4-DR W.B.1	EMO = 5.9L 8 Cyl.	DGK = TRANSMISSION - 4-SPD. AUTOMATIC,42RE
			EVO = 4.7L Magnum	DGT = TRANSMISSION - 4-SPD. AUTOMATIC,46RE
			EHC = 3.9L SMPI V6	DGO = AUTO. TRANS.
			EML = 5.9L V8 MPI Engine	
			EPE = 2.5L POWER TECH I-4 Cyl.	
			EVA = 4.7L V8 MPI	

AR = use ase required - = Non illustrrated part

Timing Belt and Cover
Figure 2.5L4-615

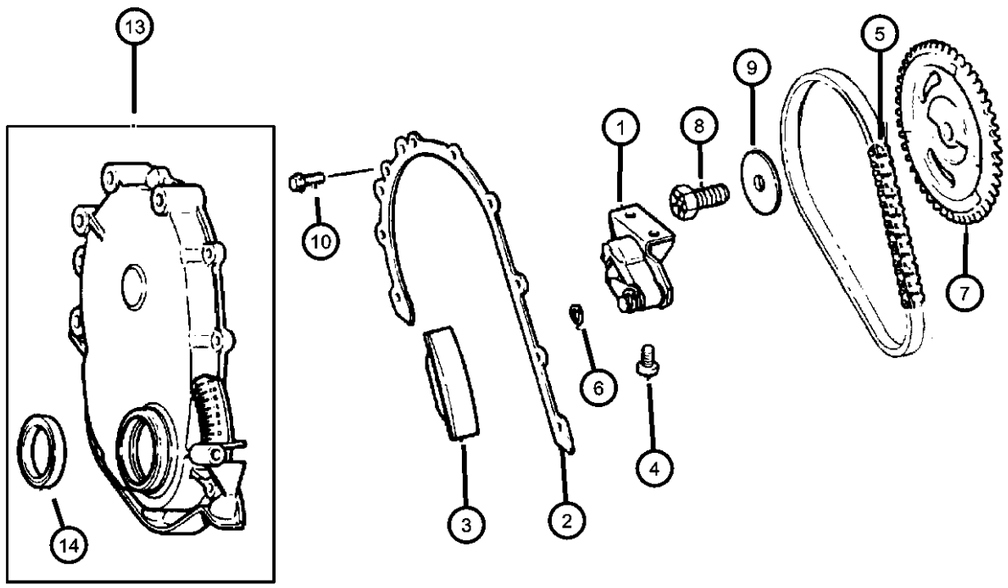

ITEM	PART NUMBER	QTY	LINE	SERIES	BODY	ENGINE	TRANS	TRIM	DESCRIPTION
1	33003421	1				EP0			TENSIONER, Belt
2	53020487	1				EP0			GASKET, Front Cover
3	33003446	1				EP0			SNUBBER, Timing Chain
4	J4006708	2				EP0			SCREW, Pan Head, .312-18x.56
5	J3242300	1				EP0			CHAIN, Timing
6	J3242300	1							CLIP, Serviced in Tensioner Assembly, (NOT SERVICED)
7	J3242280	1				EP0			GEAR, Camshaft
8	J3243156	1				EP0			BOLT, Hex Flange Head, .50-20x1.38
9	J3173284	1				EP0			WASHER, Flat, .206 Diameter
10	06035893	5				EP0			BOLT, Hex
-11	06035894	2				EP0			SCREW
-12	06035895	1				EP0			SCREW
13	53020222	1				EP0			COVER, Timing Belt
14	33004681	1				EP0			SEAL, Front Main Crankshaft

DAKOTA (AN)

SERIES	LINE	BODY	ENGINE	TRANSMISSION
L = Quad Cab	1 = Dakota 2WD	31 = CLUB CAB 2-DR 6.5 FT BOX	EPO = 2.5L 4 Cyl.	DDC = TRANSMISSION - 5-SPEED HD MANUAL
L = Regular Cab	5 = Dakota 4WD	61 = REG CAB 6.5 FT BOX	EHO = 3.9L 6 Cyl.	DG4 = TRANSMISSION-MULTI-SPEED AUTO, 45RFE
L = Club Cab		84 = CREW CAB 4-DR W.B.1	EMO = 5.9L 8 Cyl.	DGK = TRANSMISSION - 4-SPD. AUTOMATIC,42RE
			EVO = 4.7L Magnum	DGT = TRANSMISSION - 4-SPD. AUTOMATIC,46RE
			EHC = 3.9L SMPI V6	DGO = AUTO. TRANS.
			EML = 5.9L V8 MPI Engine	
			EPE = 2.5L POWER TECH I-4 Cyl.	
			EVA = 4.7L V8 MPI	

Engine Oiling
Figure 2.5L4-715

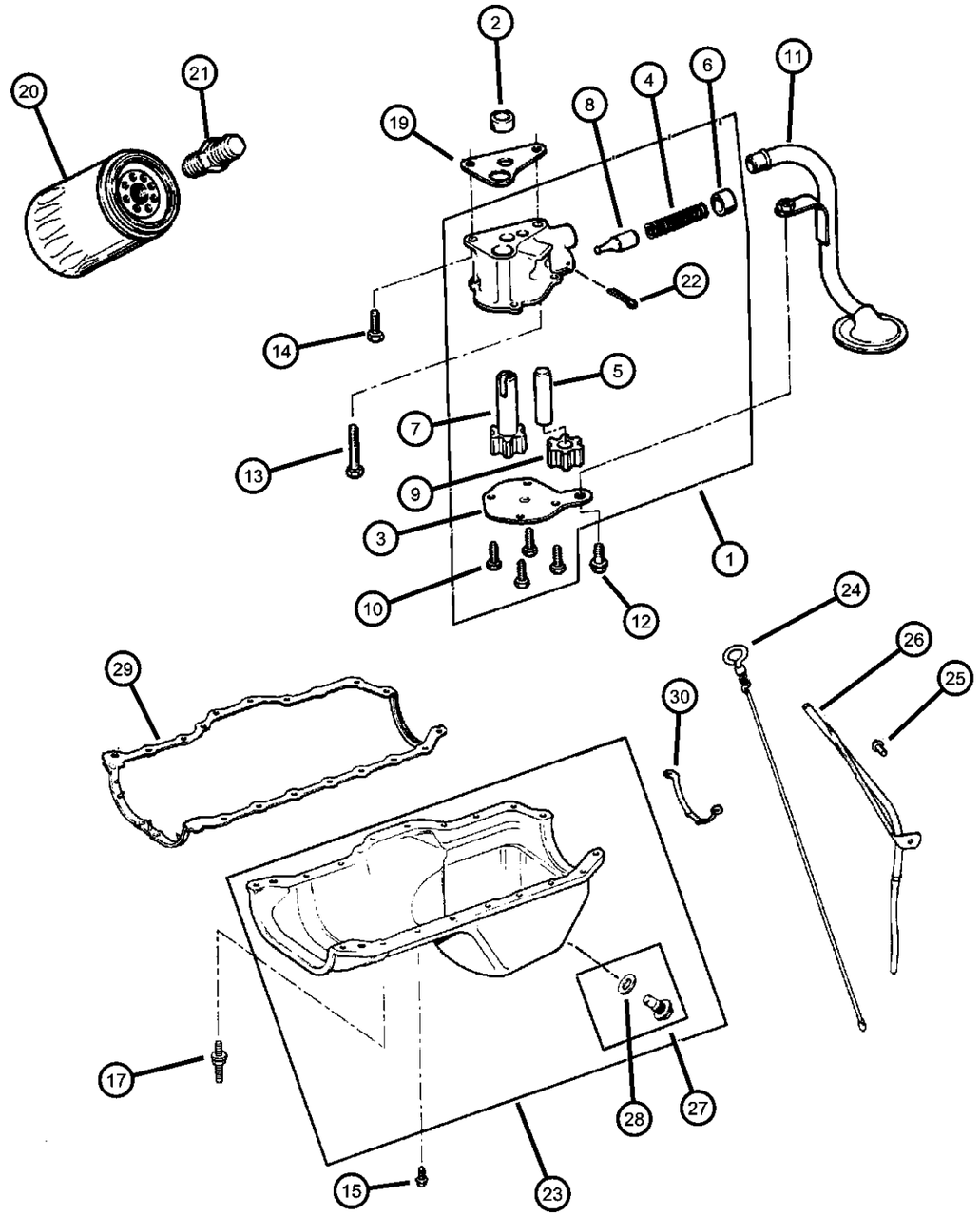

ITEM	PART NUMBER	QTY	LINE	SERIES	BODY	ENGINE	TRANS	TRIM	DESCRIPTION
1	J3241399	1				EP0			PUMP, Engine Oil
2	J4005149	1				EP0			DOWEL, Oil Pump
3	J3241733	1				EP0			COVER, Engine Oil Pump
4	J3239668	1				EP0			SPRING, Oil Pressure Relief Valve
5	J3171956	1				EP0			SHAFT, Oil Pump
6	J3171958	1				EP0			RETAINER, Oil Release Valve
7	J3172334	1				EP0			GEAR, Oil Pump
8	J3188661	1				EP0			PLUNGER, Oil Pressure Relief Valve
9	J3196843	1				EP0			GEAR, Oil Pump Driven
10	J9416852	4				EP0			SCREW, Hex Flange Head, .25-20x.50
11	53020564	1				EP0			TUBE, Oil Pump Inlet
12	53020564	1							BOLT, Hex Flange Head, .312-18x.625, (NOT SERVICED)
13	00154593	1				EP0			SCREW, Hex Head Coned, .312-18x2.625
14	06022235	1				EP0			BOLT AND WASHER, Hex Head, .312-18x1.00
15	06034732	13				EP0			SCREW AND WASHER, Hex Head, .25-20x.545
-16	06034483	3				EP0			SCREW, Hex Head Coned, .312-18x.875
17	06034734	6				EP0			BOLT, Double Stud Hex, .250-20x1.437 & .250-20 x.700
-18	06034733	1				EP0			STUD, .312-18/.250-20x1.680
19	J3172332	1				EP0			GASKET, Oil Pump
20	05281090	1				EP0			FILTER, Engine Oil
	0FE00292								Canadian Aftermarket Part
	05281090BA								BULK PACK (12)
	77060018								Performance Mobil 1, 15W - 50 Tri-Synthetic Engine Oil- Recommended Fill for 6.1L & 8.3L
	P5007323								Performance Mobil 1, 5W - 30 Tri-Synthetic Engine Oil, Quart
21	53007563	1				EP0			CONNECTOR, Oil Filter
22	J0271448	1				EP0			PIN, Roll, 5/32" x 1.00"

DAKOTA (AN)

SERIES	LINE	BODY	ENGINE	TRANSMISSION
L = Quad Cab L = Regular Cab L = Club Cab	1 = Dakota 2WD 5 = Dakota 4WD	31 = CLUB CAB 2-DR 6.5 FT BOX 61 = REG CAB 6.5 FT BOX 84 = CREW CAB 4-DR W.B.1	EPO = 2.5L 4 Cyl. EHO = 3.9L 6 Cyl. EMO = 5.9L 8 Cyl. EVO = 4.7L Magnum EHC = 3.9L SMPI V6 EML = 5.9L V8 MPI Engine EPE = 2.5L POWER TECH I-4 Cyl. EVA = 4.7L V8 MPI	DDC = TRANSMISSION - 5-SPEED HD MANUAL DG4 = TRANSMISSION-MULTI-SPEED AUTO, 45RFE DGK = TRANSMISSION - 4-SPD. AUTOMATIC,42RE DGT = TRANSMISSION - 4-SPD. AUTOMATIC,46RE DGO = AUTO. TRANS.

Engine Oiling
Figure 2.5L4-715

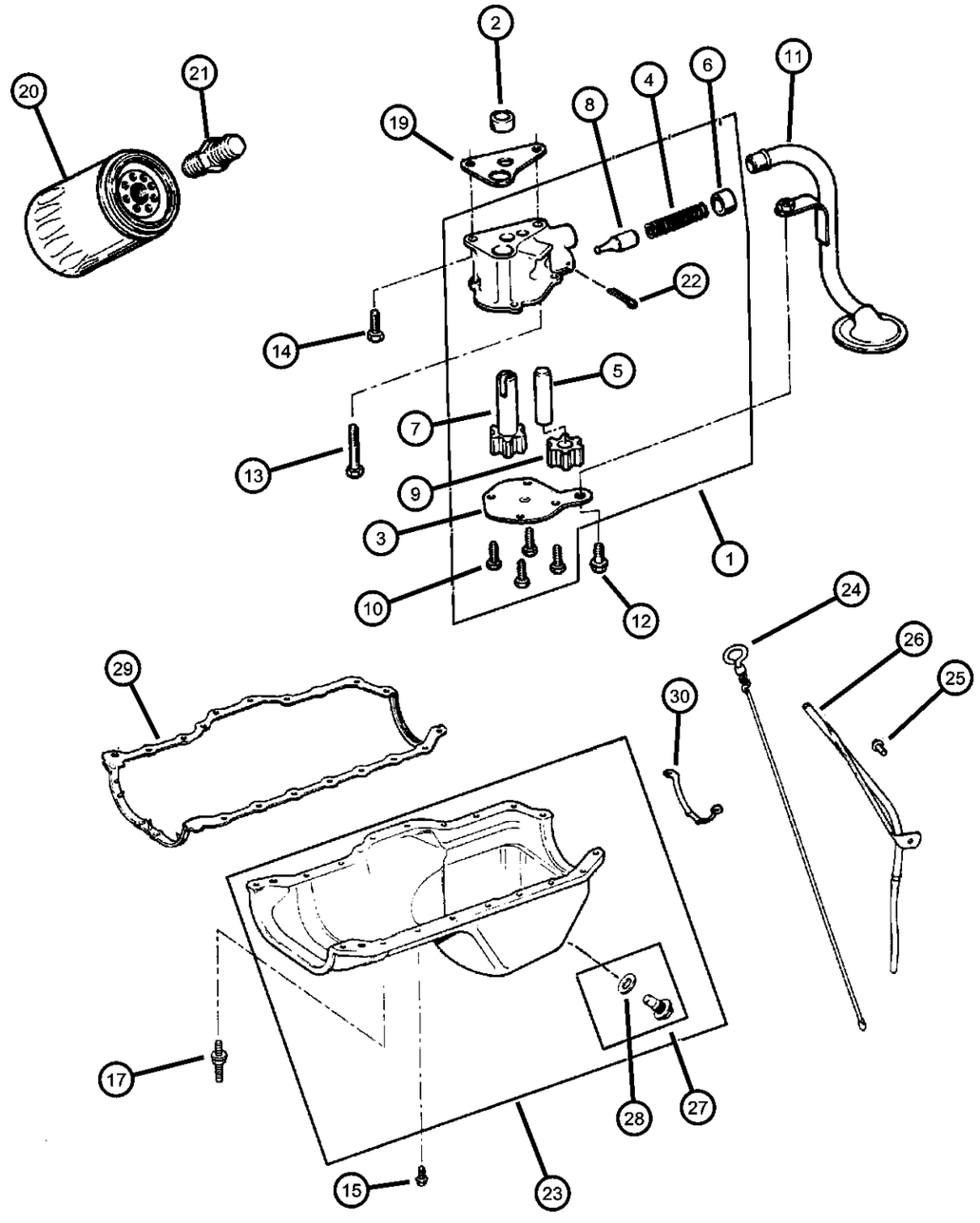

ITEM	PART NUMBER	QTY	LINE	SERIES	BODY	ENGINE	TRANS	TRIM	DESCRIPTION
23	53020560	1				EP0			PAN, Engine Oil
24	53010444AB	1				EP0			INDICATOR, Engine Oil Level
25	06035664	1				EP0			STUD, .312-18x1.560
26	53010343	1				EP0			TUBE, Oil Filler
27	06035417	1				EP0			PLUG, Oil Drain
28	06035417	1							GASKET, Oil Drain Plug, Serviced in Plug, (NOT SERVICED)
29	53007567	1				EP0			GASKET, Oil Pan
30	J3243116	1				EP0			SUPPORT, Engine Oil Pan

DAKOTA (AN)

SERIES	LINE	BODY	ENGINE	TRANSMISSION
L = Quad Cab	1 = Dakota 2WD	31 = CLUB CAB 2-DR 6.5 FT BOX	EPO = 2.5L 4 Cyl.	DDC = TRANSMISSION - 5-SPEED HD MANUAL
L = Regular Cab	5 = Dakota 4WD	61 = REG CAB 6.5 FT BOX	EHO = 3.9L 6 Cyl.	DG4 = TRANSMISSION-MULTI-SPEED AUTO, 45RFE
L = Club Cab		84 = CREW CAB 4-DR W.B.1	EMO = 5.9L 8 Cyl.	DGK = TRANSMISSION - 4-SPD. AUTOMATIC,42RE
			EVO = 4.7L Magnum	DGT = TRANSMISSION - 4-SPD. AUTOMATIC,46RE
			EHC = 3.9L SMPI V6	DGO = AUTO. TRANS.
			EML = 5.9L V8 MPI Engine	
			EPE = 2.5L POWER TECH I-4 Cyl.	
			EVA = 4.7L V8 MPI	

Manifold, Intake and Exhaust
Figure 2.5L4-815

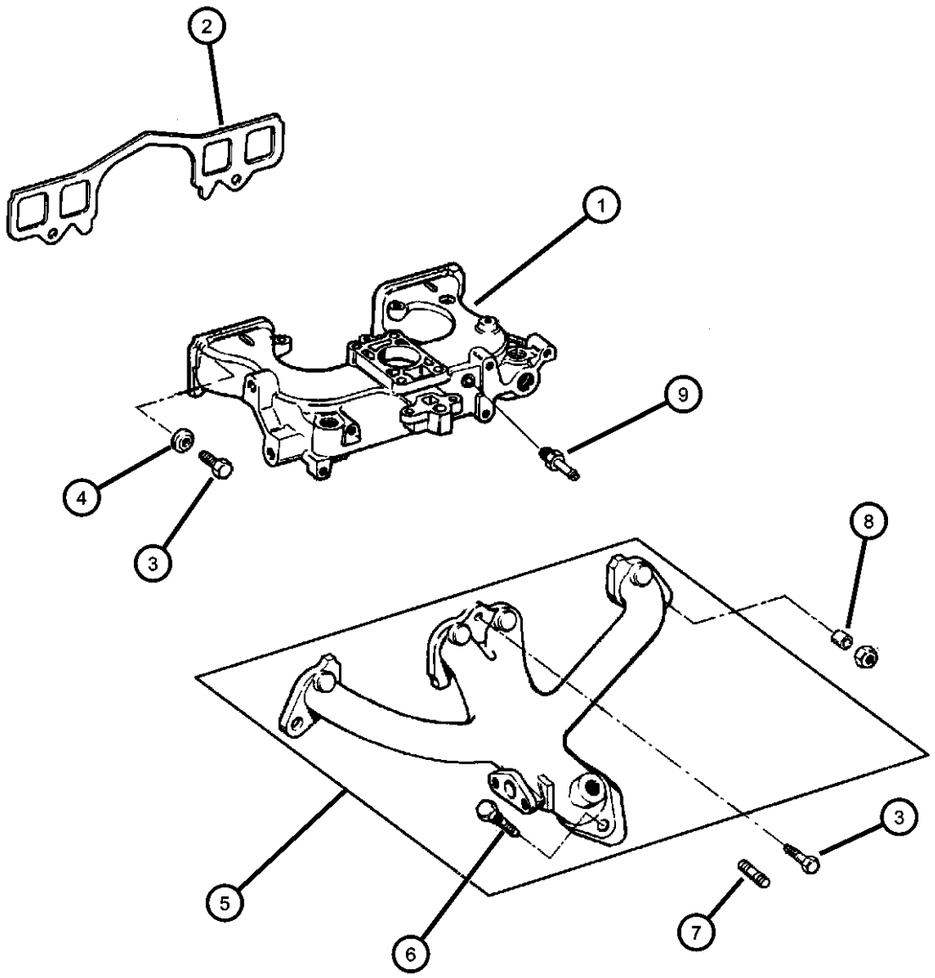

ITEM	PART NUMBER	QTY	LINE	SERIES	BODY	ENGINE	TRANS	TRIM	DESCRIPTION
1	53010245	1				EP0			MANIFOLD, Intake
2	53020112	1				EP0			GASKET, Intake Manifold
3	06036045AA	4				EP0			BOLT AND RETAINER, Hex Head
4	06036171AA	2				EP0			NUT AND WASHER
5	53008860	1				EP0			MANIFOLD, Exhaust
6	J4007109	2				EP0			STUD, .375-16x1.69
7	06036193AA	2				EP0			STUD, .375-16/.375-24x1.75
8	33003332	2				EP0			SPACER, Exhaust Manifold
9	04854194	1				EP0			FITTING, Vacuum, Crankcase Vent

DAKOTA (AN)

SERIES	LINE	BODY	ENGINE	TRANSMISSION
L = Quad Cab L = Regular Cab L = Club Cab	1 = Dakota 2WD 5 = Dakota 4WD	31 = CLUB CAB 2-DR 6.5 FT BOX 61 = REG CAB 6.5 FT BOX 84 = CREW CAB 4-DR W.B.1	EPO = 2.5L 4 Cyl. EHO = 3.9L 6 Cyl. EMO = 5.9L 8 Cyl. EVO = 4.7L Magnum EHC = 3.9L SMPI V6 EML = 5.9L V8 MPI Engine EPE = 2.5L POWER TECH I-4 Cyl. EVA = 4.7L V8 MPI	DDC = TRANSMISSION - 5-SPEED HD MANUAL DG4 = TRANSMISSION-MULTI-SPEED AUTO, 45RFE DGK = TRANSMISSION - 4-SPD. AUTOMATIC,42RE DGT = TRANSMISSION - 4-SPD. AUTOMATIC,46RE DGO = AUTO. TRANS.

Crankcase Ventilation
Figure 2.5L4-915

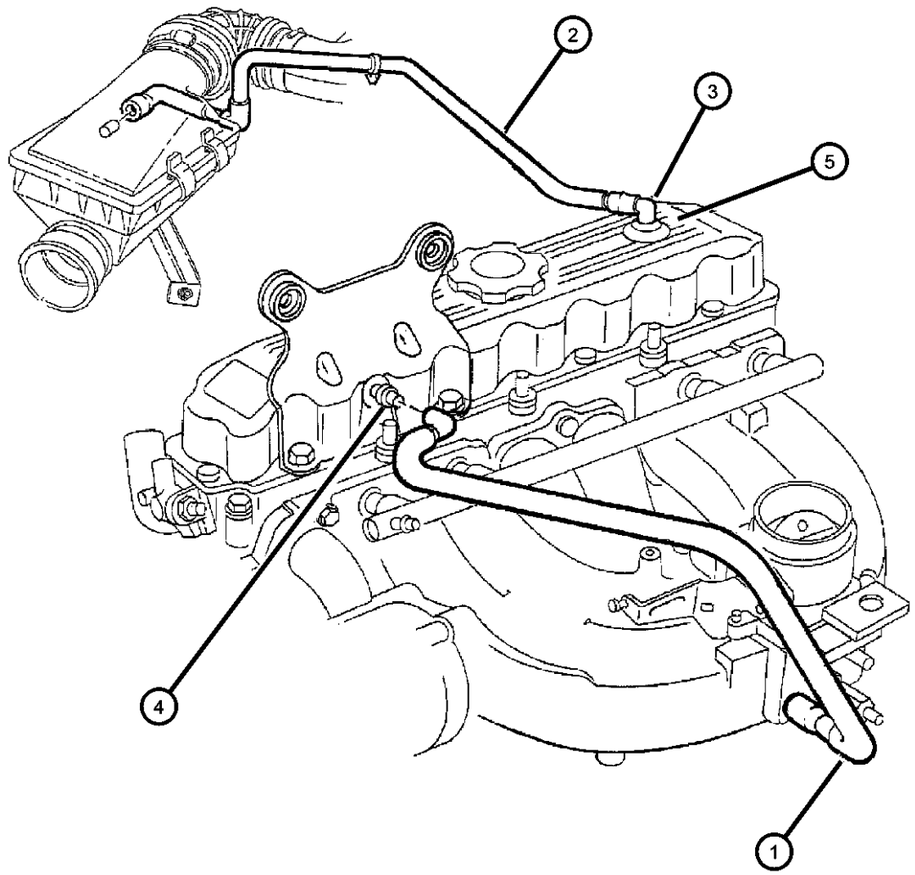

ITEM	PART NUMBER	QTY	LINE	SERIES	BODY	ENGINE	TRANS	TRIM	DESCRIPTION
1	04854072	1				EP0			TUBE, Vent
2	53030614	1				EP0			TUBE, Crankcase Vent Valve
3	53030497	1				EP0			FITTING, Crankcase Vent Tube
4	33004175	1				EP0			CONNECTOR, Vacuum Hose
5	02946079	1				EP0			GROMMET, Crankcase Vent

DAKOTA (AN)

SERIES	LINE	BODY	ENGINE	TRANSMISSION
L = Quad Cab L = Regular Cab L = Club Cab	1 = Dakota 2WD 5 = Dakota 4WD	31 = CLUB CAB 2-DR 6.5 FT BOX 61 = REG CAB 6.5 FT BOX 84 = CREW CAB 4-DR W.B.1	EPO = 2.5L 4 Cyl. EHO = 3.9L 6 Cyl. EMO = 5.9L 8 Cyl. EVO = 4.7L Magnum EHC = 3.9L SMPI V6 EML = 5.9L V8 MPI Engine EPE = 2.5L POWER TECH I-4 Cyl. EVA = 4.7L V8 MPI	DDC = TRANSMISSION - 5-SPEED HD MANUAL DG4 = TRANSMISSION-MULTI-SPEED AUTO, 45RFE DGK = TRANSMISSION - 4-SPD. AUTOMATIC,42RE DGT = TRANSMISSION - 4-SPD. AUTOMATIC,46RE DGO = AUTO. TRANS.

Group - 3.9L

Engine 3.9L Six Cylinder

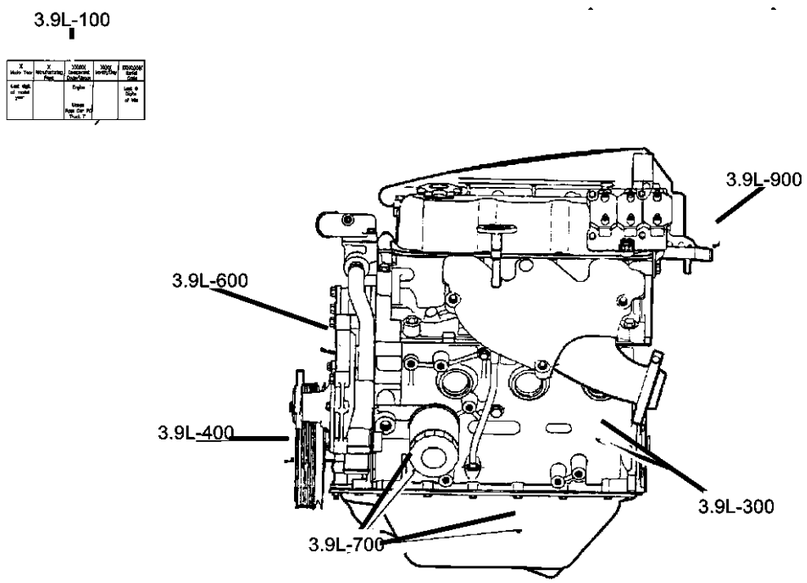

3.9L-200 Cylinder Head 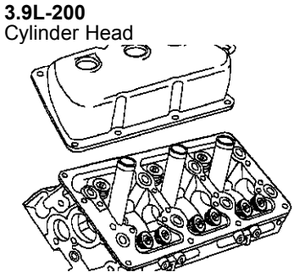	**3.9L-300** Cylinder Block 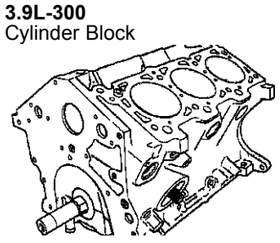	**3.9L-400** Crankshaft, Piston and Torque Converter 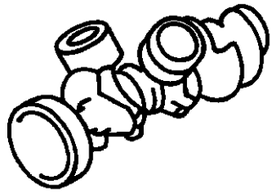	**3.9L-500** Camshafts & Valves 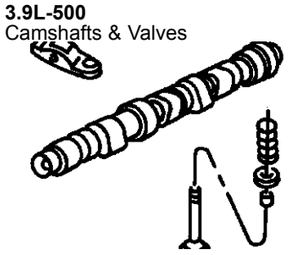
3.9L-600 Timing Belt and Cover 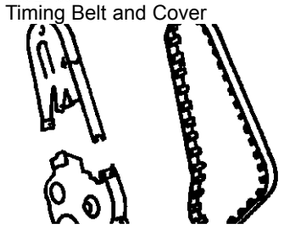	**3.9L-700** Engine Oiling 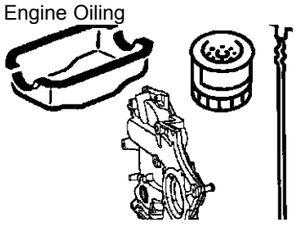	**3.9L-800** Manifolds 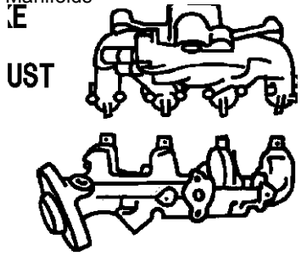	**3.9L-900** Crankcase Ventilation 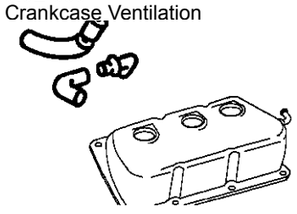

Group - 3.9L Engine 3.9L Six Cylinder

Illustration Title — Group-Fig. No.

Cylinder Head
Cylinder Head 3.9l Engine [EHC] ..... Fig. 3.9L - 210

Cylinder Block
Cylinder Block 3.9l Engine [EHC] ..... Fig. 3.9L - 310

Crankshaft, Piston and Torque Converter
Crankshaft, Piston and Torque Converter ..... Fig. 3.9L - 410

Camshafts & Valves
Camshaft and Valves ..... Fig. 3.9L - 510

Timing Belt and Cover
Timing Belt and Cover ..... Fig. 3.9L - 610

Engine Oiling
Engine Oiling ..... Fig. 3.9L - 710

Manifolds
Manifold, Intake and Exhaust ..... Fig. 3.9L - 810
Manifold, Heat Shields ..... Fig. 3.9L - 820

Crankcase Ventilation
Crankcase Ventilation ..... Fig. 3.9L - 910

Cylinder Head 3.9l Engine [EHC]
Figure 3.9L-210

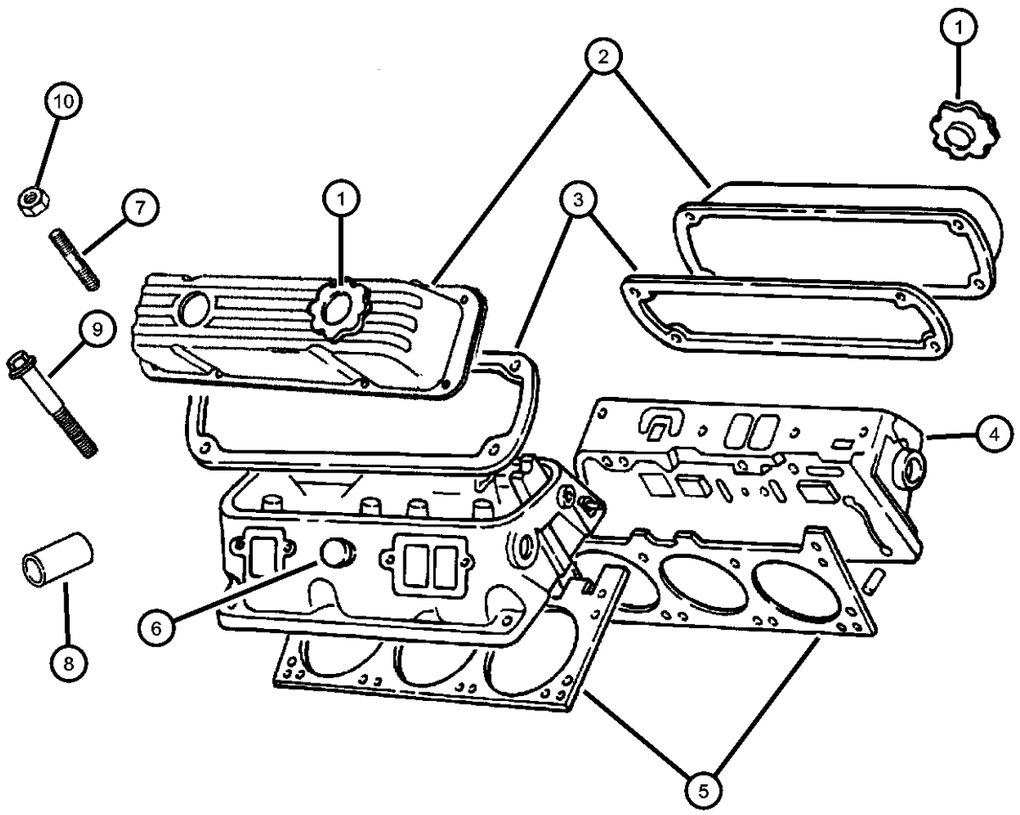

ITEM	PART NUMBER	QTY	LINE	SERIES	BODY	ENGINE	TRANS	TRIM	DESCRIPTION
NOTE: Packages Do Not Contain Gaskets For All Required Sealing. R.T.V. Sealer And Gasket Eliminator Must Also Be Used.									
NOTE: EH0=All 3.9L Engines									
1	04777536	1				EH0, EM0			CAP, Oil Filler
2									COVER, Cylinder Head
	53020336	1				EH0			w/Oil Fill Hole
	53020609	1				EH0			w/o Oil Fill Hole
3	53006699	2				EH0			GASKET, Valve Cover
4	53021135	2				EH0			HEAD, Cylinder
	R5639480								Mopar Reman for 1998-2002 use
	R5639426								Mopar Reman for 1992-1997 use
5	53020489	2				EH0			GASKET, Cylinder Head
6	04556020	4				EH0			PLUG, Core, 1.25 Diameter
7	06035878AA	12				EH0			STUD
8	53020419	6				EH0			SHIELD, Heat
9									BOLT, Cylinder Head
	06034690	8				EH0			.50-13x2.00
	06034691	8				EH0			.50-13x4.50
10	06033560	1							NUT AND WASHER, Hex Nut-Coned Washer, .25-20
-11	04897384AC	1				EH0			GASKET PACKAGE, Engine

DAKOTA (AN)

SERIES	LINE	BODY	ENGINE	TRANSMISSION
L = Quad Cab L = Regular Cab L = Club Cab	1 = Dakota 2WD 5 = Dakota 4WD	31 = CLUB CAB 2-DR 6.5 FT BOX 61 = REG CAB 6.5 FT BOX 84 = CREW CAB 4-DR W.B.1	EPO = 2.5L 4 Cyl. EHO = 3.9L 6 Cyl. EMO = 5.9L 8 Cyl. EVO = 4.7L Magnum EHC = 3.9L SMPI V6 EML = 5.9L V8 MPI Engine EPE = 2.5L POWER TECH I-4 Cyl. EVA = 4.7L V8 MPI	DDC = TRANSMISSION - 5-SPEED HD MANUAL DG4 = TRANSMISSION-MULTI-SPEED AUTO, 45RFE DGK = TRANSMISSION - 4-SPD. AUTOMATIC,42RE DGT = TRANSMISSION - 4-SPD. AUTOMATIC,46RE DGO = AUTO. TRANS.

Cylinder Block 3.9l Engine [EHC]
Figure 3.9L-310

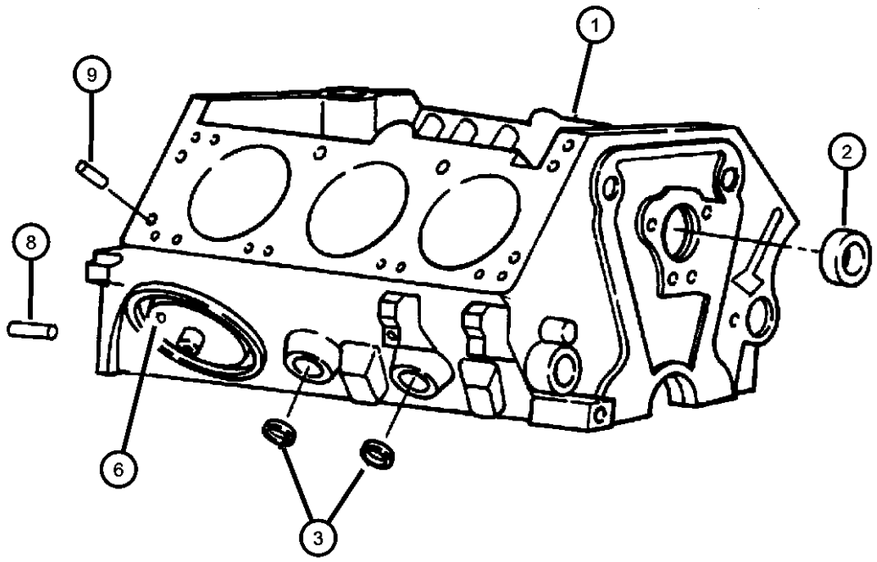

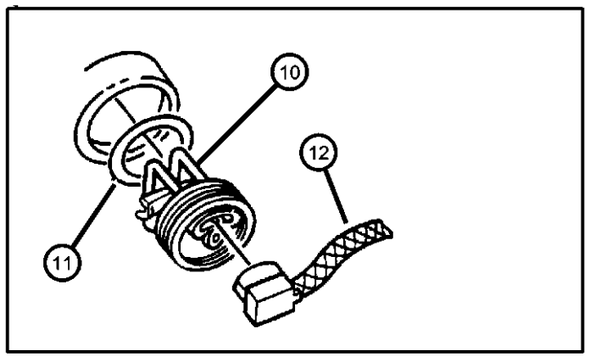

ITEM	PART NUMBER	QTY	LINE	SERIES	BODY	ENGINE	TRANS	TRIM	DESCRIPTION
NOTE: Packages Do Not Contain Gaskets For All Required Sealing. R.T.V. Sealer And Gasket Eliminator Must Also Be Used.									
NOTE: EH0=All 3.9L Engines									
1	04713599	1				EH0			BLOCK, Short, Contains: Crank, Rods, Pistons, Rings, Cam Bearings
	04761845AC								Mopar 10W30 Engine Oil Gallon
	04761839AB								Mopar 10W30 Engine Oil Quart
	P5007324								Performance Mobil 1, 10W - 30 Tri-Synthetic Engine Oil, Quart
2	03830603	1				EH0			BEARING, Camshaft, #1
3	04556020	1				EH0			PLUG, Core, 1.25 Diameter
-4	04556022	7				EH0			PLUG, Core, 1.625 Diameter
-5	04556023	AR				EH0, EM0			PLUG, Core, 1.695 Diameter
6	03751818	2				EH0			PLUG, Pipe
-7	53009518	1				EH0			PLUG, Cylinder Block Oil Hole
8	01122532	2				EH0			DOWEL, Block To Clutch Housing
9	00141215	4				EH0			DOWEL, .312 x .500
10	04798276	1				EH0, EM0			HEATER PACKAGE, Engine Block
11	06501445	AR				EH0, EM0, EV0			O RING, Engine Block Heater
12	56020234	1							CORD, Engine Block Heater
-13	04720651	1				EH0			GASKET PACKAGE, Engine

DAKOTA (AN)

SERIES	LINE	BODY	ENGINE	TRANSMISSION
L = Quad Cab L = Regular Cab L = Club Cab	1 = Dakota 2WD 5 = Dakota 4WD	31 = CLUB CAB 2-DR 6.5 FT BOX 61 = REG CAB 6.5 FT BOX 84 = CREW CAB 4-DR W.B.1	EPO = 2.5L 4 Cyl. EHO = 3.9L 6 Cyl. EMO = 5.9L 8 Cyl. EVO = 4.7L Magnum EHC = 3.9L SMPI V6 EML = 5.9L V8 MPI Engine EPE = 2.5L POWER TECH I-4 Cyl. EVA = 4.7L V8 MPI	DDC = TRANSMISSION - 5-SPEED HD MANUAL DG4 = TRANSMISSION-MULTI-SPEED AUTO, 45RFE DGK = TRANSMISSION - 4-SPD. AUTOMATIC,42RE DGT = TRANSMISSION - 4-SPD. AUTOMATIC,46RE DGO = AUTO. TRANS.

Crankshaft, Piston and Torque Converter
Figure 3.9L-410

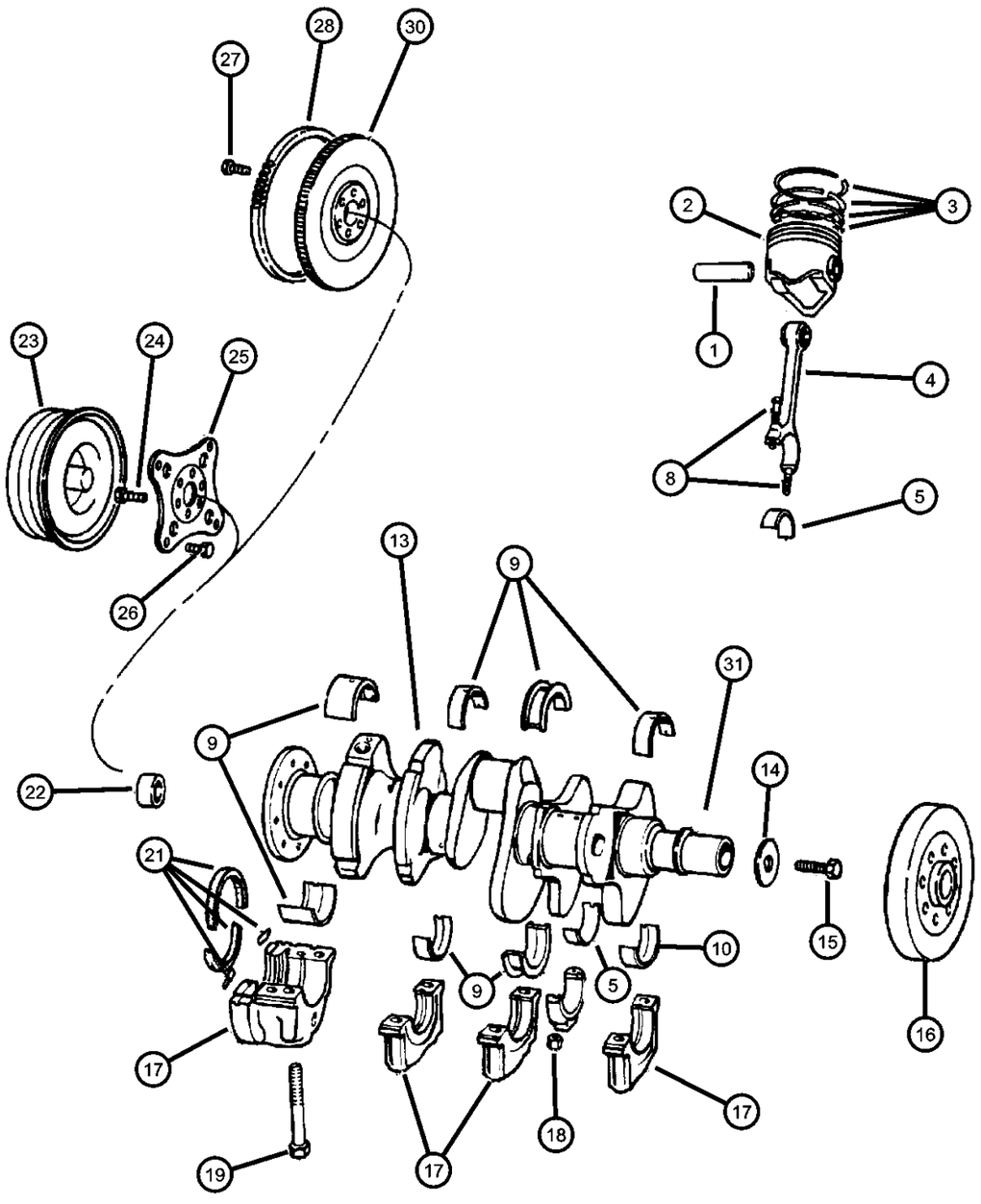

ITEM	PART NUMBER	QTY	LINE	SERIES	BODY	ENGINE	TRANS	TRIM	DESCRIPTION
NOTE: EH0=All 3.9L Engines DBB=All Manual Transmissions DG0=All Automatic Engines									
1	04720651	1							PIN, Piston, Serviced in Piston Assy, (NOT SERVICED)
2									PISTON PIN AND ROD
	04778861	3				EH0			#1,3,5 B Size, 3.90925
	04778862	3				EH0			#2,4,6 B Size, 3.90925
	04778863	3				EH0			#1,3,5 C Size, 3.90975
	04778864	AR				EH0			#2,4,6 C Size, 3.90975
	04778865	3				EH0			#1,3,5 D Size, 3.91025
	04778866	AR				EH0			#2,4,6 D Size, 3.91025
3	04720653	3				EH0			RING PACKAGE, Piston, Standard Size Complete Engine
4	04720653	3							ROD, Connecting, Serviced in Piston Assy, (NOT SERVICED)
5	04397658	6				EH0			BEARING, Connecting Rod, STD.
-6	04397659	AR				EH0			BEARING, Connecting Rod, .001" U/S
-7	04397659	AR							BEARING, Connecting Rod, .010" U/S, (NOT REQUIRED)
8	06033441	6				EH0			BOLT, Connecting Rod
9									BEARING PACKAGE, Crankshaft, Standard Size
	04397701	1				EH0			#4
	04397778	AR				EH0			#1,3
10	04720595	2				EH0			BEARING, Crankshaft, STD.
-11	04397702	AR				EH0			BEARING PACKAGE, Crankshaft, .001 Undersize, #4
-12	04397702	AR							BEARING PACKAGE, Crankshaft, .010 Undersize, (NOT REQUIRED)
13	53020601	1				EH0			CRANKSHAFT
14	06036207AA	1				EH0, EM0			SCREW AND WASHER
15	01949424	6				EH0, EM0	DG0		SCREW, Hex Head Header Point, .75-16x2.25
16	53020229	1				EH0			DAMPER, Crankshaft
17	53020229	1							CAP, Serviced in Block, (NOT SERVICED)
18	06032296	6				EH0			NUT, Hex, .375-24

DAKOTA (AN)

SERIES	LINE	BODY	ENGINE	TRANSMISSION
L = Quad Cab L = Regular Cab L = Club Cab	1 = Dakota 2WD 5 = Dakota 4WD	31 = CLUB CAB 2-DR 6.5 FT BOX 61 = REG CAB 6.5 FT BOX 84 = CREW CAB 4-DR W.B.1	EPO = 2.5L 4 Cyl. EHO = 3.9L 6 Cyl. EMO = 5.9L 8 Cyl. EVO = 4.7L Magnum EHC = 3.9L SMPI V6 EML = 5.9L V8 MPI Engine EPE = 2.5L POWER TECH I-4 Cyl. EVA = 4.7L V8 MPI	DDC = TRANSMISSION - 5-SPEED HD MANUAL DG4 = TRANSMISSION-MULTI-SPEED AUTO, 45RFE DGK = TRANSMISSION - 4-SPD. AUTOMATIC,42RE DGT = TRANSMISSION - 4-SPD. AUTOMATIC,46RE DGO = AUTO. TRANS.

AR = use ase required - = Non illustrrated part

Crankshaft, Piston and Torque Converter
Figure 3.9L-410

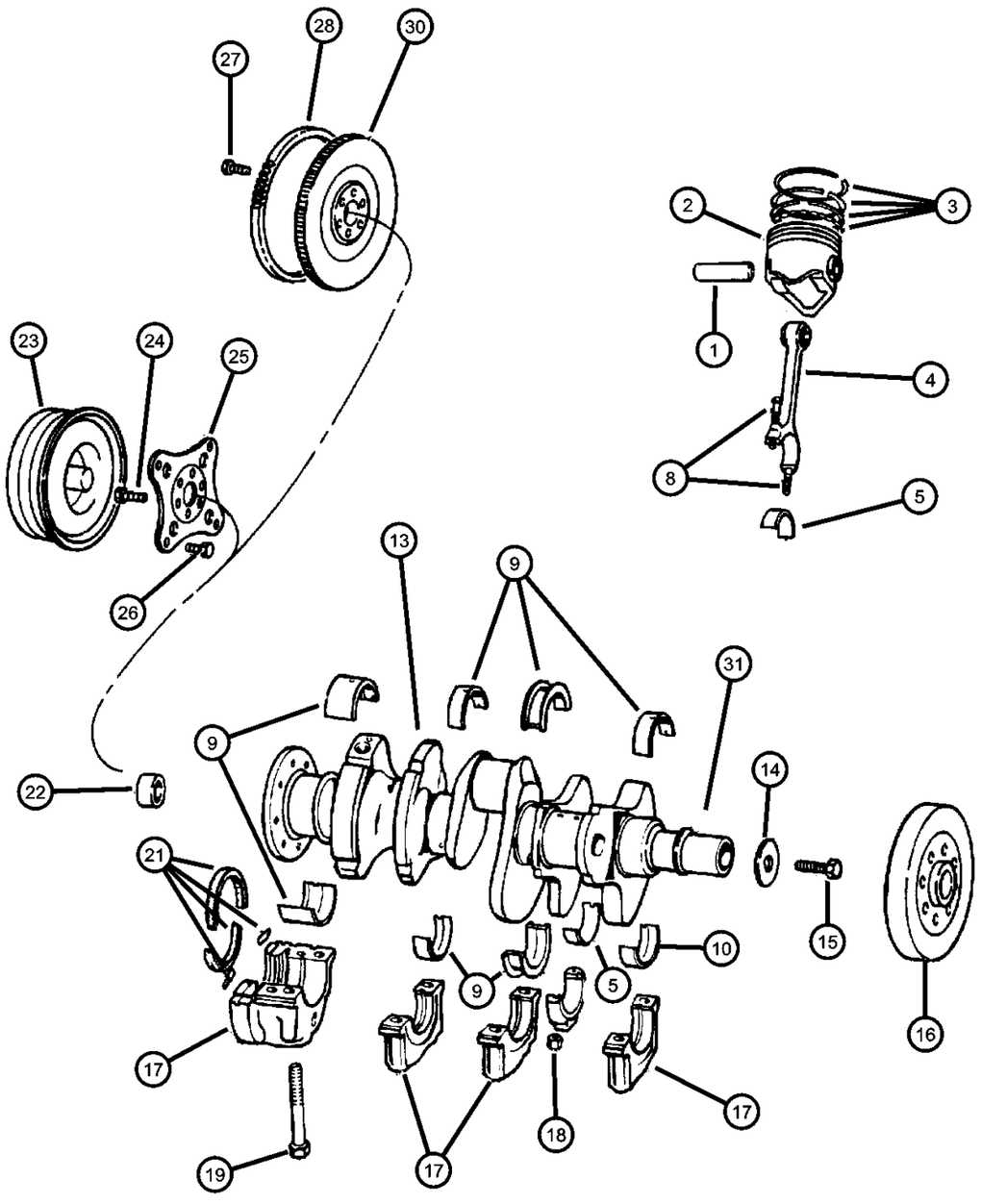

ITEM	PART NUMBER	QTY	LINE	SERIES	BODY	ENGINE	TRANS	TRIM	DESCRIPTION
19	06027264	6				EH0			SCREW, Socket Hex Head, .50-13x3.25, #1,2,3
-20	06033300	2				EH0			SCREW, Cap, .50-13x2.80, #4
21	04778228	2				EH0			SEAL PACKAGE, Crankshaft
22	53009180AB	1				EH0	DBB		BEARING, Pilot
23	04736593	1				EH0	DG0		TORQUE CONVERTER
	R4736593								Mopar Remanufactured Part
24	01949424	6				EH0, EM0	DG0		SCREW, Hex Head Header Point, .75-16x2.25
25	52118256	1				EH0	DG0		PLATE, Torque Converter Drive
26	01949765	4					DG0		SCREW, Hex Head Header Point, .312-24x.44
27	06036143AA	6				EH0	DBB		SCREW
28	02843214	1				EH0	DBB		GEAR, Flywheel Ring
-29	02121196	1				EH0	DG0		GEAR, Ring
30	53020583AB	1				EH0	DBB		FLYWHEEL
31	06035948AA	1				EH0, EM0			WASHER, Sealing

DAKOTA (AN)

SERIES	LINE	BODY	ENGINE	TRANSMISSION
L = Quad Cab L = Regular Cab L = Club Cab	1 = Dakota 2WD 5 = Dakota 4WD	31 = CLUB CAB 2-DR 6.5 FT BOX 61 = REG CAB 6.5 FT BOX 84 = CREW CAB 4-DR W.B.1	EPO = 2.5L 4 Cyl. EHO = 3.9L 6 Cyl. EMO = 5.9L 8 Cyl. EVO = 4.7L Magnum EHC = 3.9L SMPI V6 EML = 5.9L V8 MPI Engine EPE = 2.5L POWER TECH I-4 Cyl. EVA = 4.7L V8 MPI	DDC = TRANSMISSION - 5-SPEED HD MANUAL DG4 = TRANSMISSION-MULTI-SPEED AUTO, 45RFE DGK = TRANSMISSION - 4-SPD. AUTOMATIC,42RE DGT = TRANSMISSION - 4-SPD. AUTOMATIC,46RE DGO = AUTO. TRANS.

AR = use ase required - = Non illustrrated part

Camshaft and Valves
Figure 3.9L-510

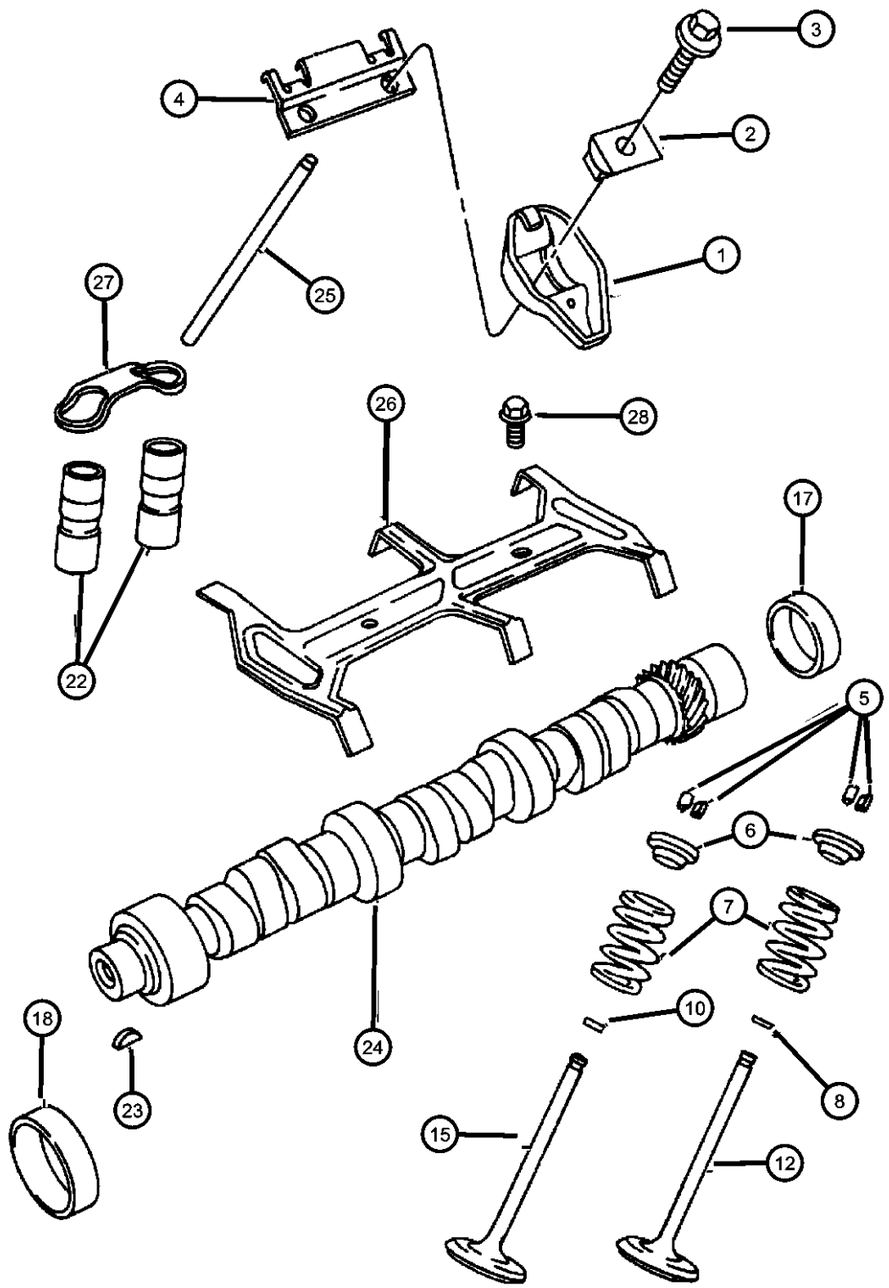

ITEM	PART NUMBER	QTY	LINE	SERIES	BODY	ENGINE	TRANS	TRIM	DESCRIPTION
NOTE: EH0=All 3.9L Engines									
1	53008282	12				EH0			ROCKER ARM, Valve
2	53008283	12				EH0			PIVOT, Rocker Arm
3	06036154AA	12				EH0			BOLT, Hex Flange Head, .312-18x1.72
4	53008633	6				EH0			RETAINER, Rocker Arm Pivot
5	33003521	24				EH0			LOCK, Valve Spring Retainer
6	33004626	12				EH0			RETAINER, Valve Spring
7	53021056	12				EH0			SPRING, Valve
8	53009886	6				EH0			SEAL, Valve Guide
-9	33003016	AR				EH0			SEAL, Valve Guide, .015" Oversize
10	53009887	6				EH0			SEAL, Valve Guide
-11	33002733	AR				EH0			SEAL, Valve Guide, .015" Oversize
12	53006723	6				EH0			VALVE, Intake, Standard
-13	53009287	AR				EH0			VALVE, Intake, .003" O/S
-14	53009285	AR				EH0			VALVE, Intake, .015" O/S
15	53006724	6				EH0			VALVE, Exhaust, Standard
-16	53009291	AR				EH0			VALVE, Exhaust, .003" O/S
17	02863071	1				EH0			PLUG, Camshaft
18	03830603	1				EH0			BEARING, Camshaft, #1
-19	04179776	1				EH0			BEARING, Camshaft, #2
-20	04179778	1				EH0			BEARING, Camshaft, #3 or #4
-21	01632526	1				EH0			BEARING, Camshaft, #4 or #5
22	04713439	12				EH0			TAPPET PACKAGE, Valve
23	00431787	1				EH0, EM0			KEY, Camshaft Sprocket
24	53020282	1				EH0			CAMSHAFT, Engine
25	53006722	12				EH0			PUSH ROD, Valve
26	04387226	1				EH0			RETAINER, Tappet Yoke Aligning
27	04483045	6				EH0			YOKE, Tappet Aligning
28	06034483	3				EP0			SCREW, Hex Head Coned, .312-18x.875

DAKOTA (AN)

SERIES	LINE	BODY	ENGINE	TRANSMISSION
L = Quad Cab L = Regular Cab L = Club Cab	1 = Dakota 2WD 5 = Dakota 4WD	31 = CLUB CAB 2-DR 6.5 FT BOX 61 = REG CAB 6.5 FT BOX 84 = CREW CAB 4-DR W.B.1	EPO = 2.5L 4 Cyl. EHO = 3.9L 6 Cyl. EMO = 5.9L 8 Cyl. EVO = 4.7L Magnum EHC = 3.9L SMPI V6 EML = 5.9L V8 MPI Engine EPE = 2.5L POWER TECH I-4 Cyl. EVA = 4.7L V8 MPI	DDC = TRANSMISSION - 5-SPEED HD MANUAL DG4 = TRANSMISSION-MULTI-SPEED AUTO, 45RFE DGK = TRANSMISSION - 4-SPD. AUTOMATIC,42RE DGT = TRANSMISSION - 4-SPD. AUTOMATIC,46RE DGO = AUTO. TRANS.

AR = use ase required - = Non illustrrated part

Timing Belt and Cover
Figure 3.9L-610

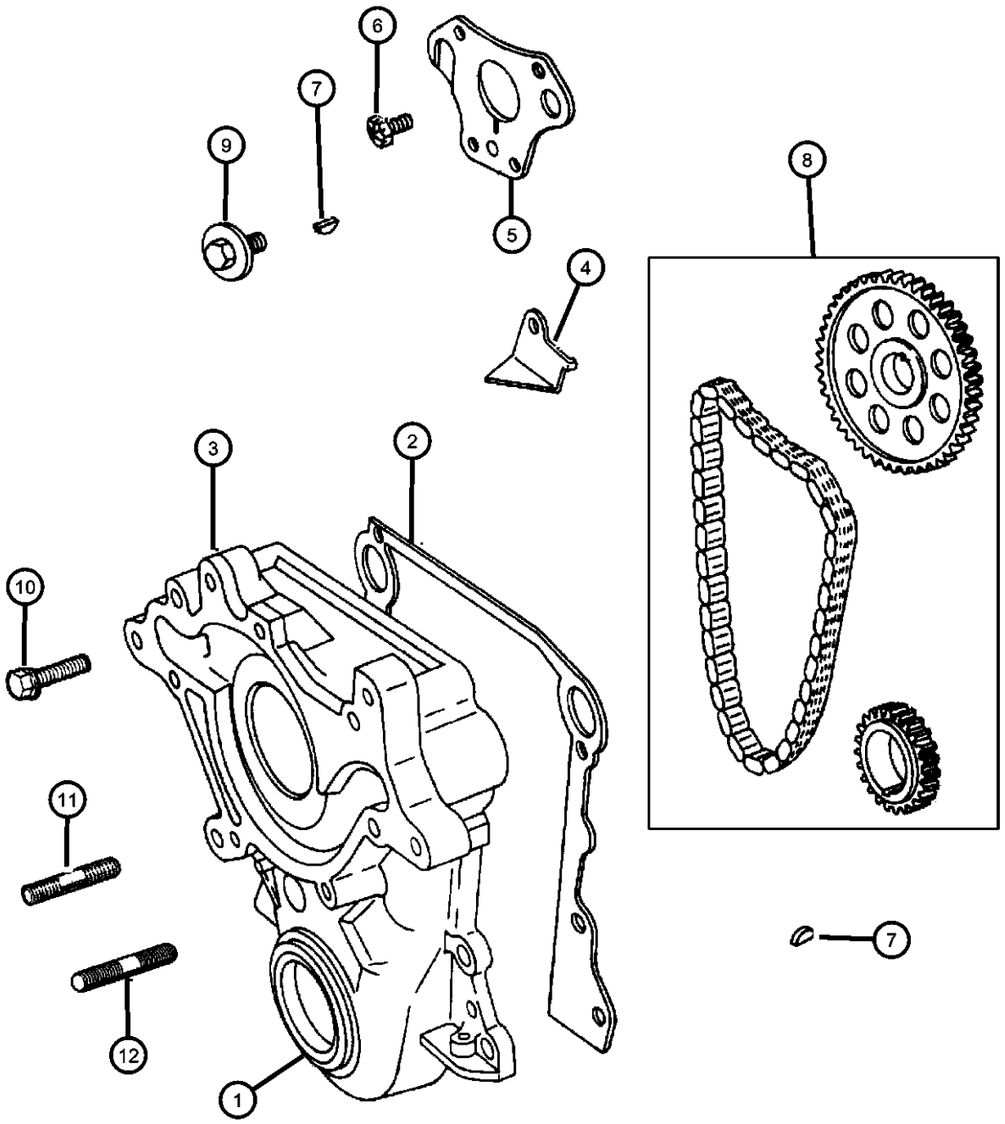

ITEM	PART NUMBER	QTY	LINE	SERIES	BODY	ENGINE	TRANS	TRIM	DESCRIPTION
NOTE: EH0=All 3.9L Engines									
1	04897297AA	1				EH0			SEAL PACKAGE, Timing Case Cover
2	53021057	1				EH0, EM0			GASKET, Chain Case Cover
3	04897723AA	1				EH0			COVER PACKAGE, Engine Timing
4	04897723AA	1							TAB, Timing Chain Oil, (NOT REQUIRED)
5	53021195AA	1				EH0			TENSIONER, Chain
6	06034483	3				EP0			SCREW, Hex Head Coned, .312-18x.875
7	06029411	1				EH0			KEY, Crankshaft Sprocket
8	83507095	1				EH0, EM0			CHAIN PACKAGE, Timing
9	06034321	1				EH0, EM0			SCREW AND WASHER, Hex Head, Coned, Header, .437-14x1.375
10	06034479	1				EH0, EM0			BOLT, Hex Head, .375-16x2.25
11	06034452	1				EH0, EM0			STUD, .375-16x.375-16x2.38
12	06034453	2				EH0, EM0			STUD, .375-16x.375-16x1.63

DAKOTA (AN)

SERIES	LINE	BODY	ENGINE	TRANSMISSION
L = Quad Cab	1 = Dakota 2WD	31 = CLUB CAB 2-DR 6.5 FT BOX	EPO = 2.5L 4 Cyl.	DDC = TRANSMISSION - 5-SPEED HD MANUAL
L = Regular Cab	5 = Dakota 4WD	61 = REG CAB 6.5 FT BOX	EHO = 3.9L 6 Cyl.	DG4 = TRANSMISSION-MULTI-SPEED AUTO, 45RFE
L = Club Cab		84 = CREW CAB 4-DR W.B.1	EMO = 5.9L 8 Cyl.	DGK = TRANSMISSION - 4-SPD. AUTOMATIC,42RE
			EVO = 4.7L Magnum	DGT = TRANSMISSION - 4-SPD. AUTOMATIC,46RE
			EHC = 3.9L SMPI V6	DGO = AUTO. TRANS.
			EML = 5.9L V8 MPI Engine	
			EPE = 2.5L POWER TECH I-4 Cyl.	
			EVA = 4.7L V8 MPI	

Engine Oiling
Figure 3.9L-710

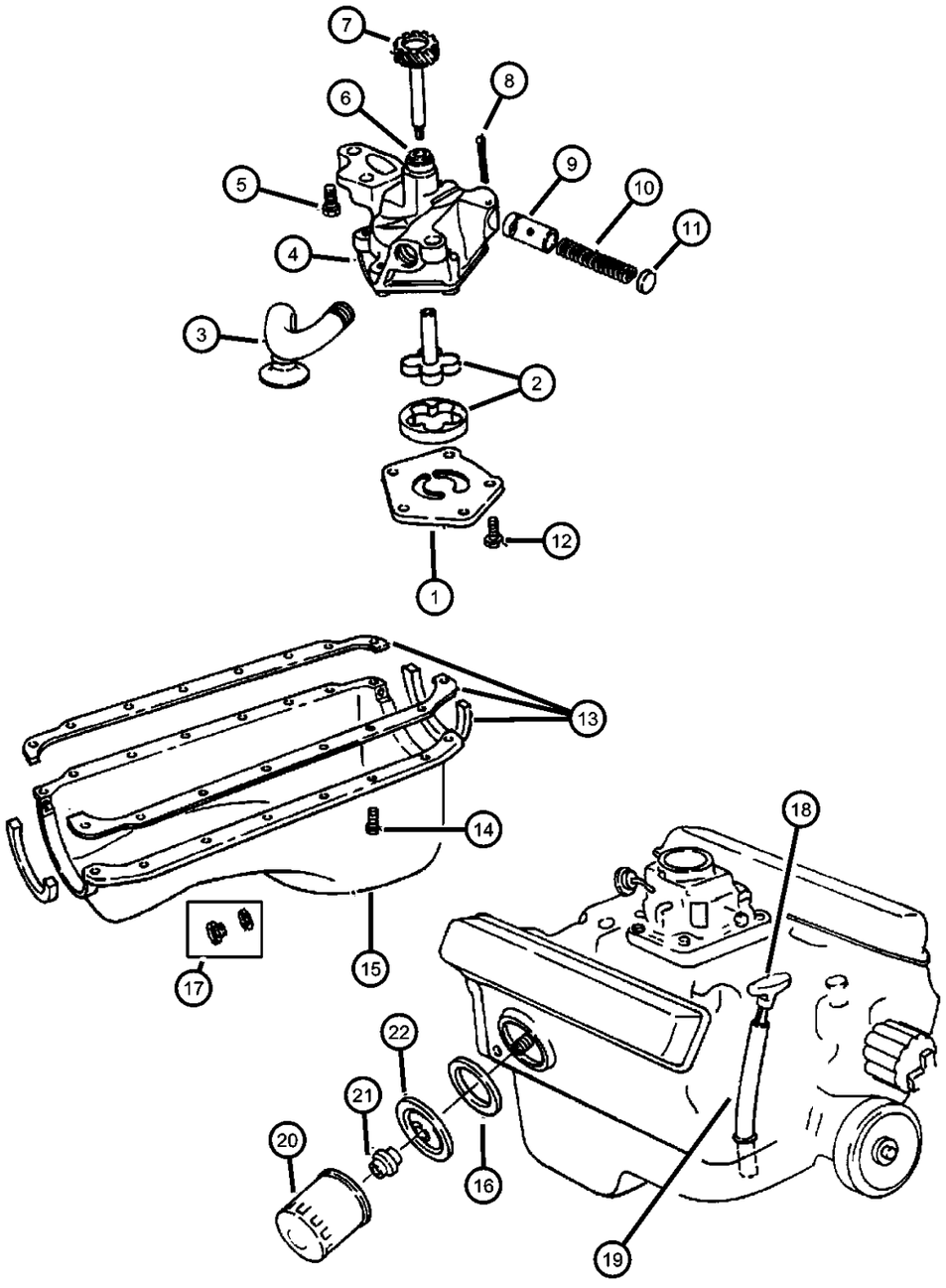

ITEM	PART NUMBER	QTY	LINE	SERIES	BODY	ENGINE	TRANS	TRIM	DESCRIPTION
NOTE: EH0=All 3.9L Engines									
1	04071043	1				EH0			COVER, Engine Oil Pump
2	03837648	1				EH0			SHAFT AND ROTOR PACKAGE, Oil Pump
3	04315436	1				EH0			PICKUP, Engine Oil
4	53009295	1				EH0			PUMP, Engine Oil
5	00179842	2				EH0, EM0			SCREW, Hex Head Header Point, .375-16x1.375
6	01737725	1				EH0			BUSHING, Oil Pump and Distibutor
7	53020546	1				EH0, EM0			SHAFT, Oil Pump
8	00108636	1				EH0			PIN, Cotter
9	02843208	1				EH0			PLUNGER, Oil Pressure Relief Valve
10	02402473	1				EH0			SPRING, Oil Pressure Relief Valve
11	02806273	1				EH0			CAP, Oil Pressure Relief Valve
12	00220480	5				EH0			SCREW, Hex Head Header Point, .25-20x.75
13	53005646	1				EH0			GASKET, Oil Pan
14	06034549	14				EH0			SCREW, Hex Head, .312-18x.94
15	53020911	1				EH0			PAN, Engine Oil
16	53020461	1				EH0, EM0			GASKET, Oil Filter Adapter
17	06035417	1				EH0			PLUG, Oil Drain
18	53020924	1				EH0			INDICATOR, Engine Oil Level
19	53020926	1				EH0, EM0			TUBE, Oil Gauge
20	05281090	1				EH0, EM0			FILTER, Engine Oil
	0FE00292								Canadian Aftermarket Part
	05281090BA								BULK PACK (12)
	77060018								Performance Mobil 1, 15W - 50 Tri-Synthetic Engine Oil- Recommended Fill for 6.1L & 8.3L
	P5007323								Performance Mobil 1, 5W - 30 Tri-Synthetic Engine Oil, Quart
21	53007563	1				EH0, EM0			CONNECTOR, Oil Filter
22	53021053	1				EH0, EM0			PLATE, Oil Filter Adapter

DAKOTA (AN)

SERIES	LINE	BODY	ENGINE	TRANSMISSION
L = Quad Cab L = Regular Cab L = Club Cab	1 = Dakota 2WD 5 = Dakota 4WD	31 = CLUB CAB 2-DR 6.5 FT BOX 61 = REG CAB 6.5 FT BOX 84 = CREW CAB 4-DR W.B.1	EPO = 2.5L 4 Cyl. EHO = 3.9L 6 Cyl. EMO = 5.9L 8 Cyl. EVO = 4.7L Magnum EHC = 3.9L SMPI V6 EML = 5.9L V8 MPI Engine EPE = 2.5L POWER TECH I-4 Cyl. EVA = 4.7L V8 MPI	DDC = TRANSMISSION - 5-SPEED HD MANUAL DG4 = TRANSMISSION-MULTI-SPEED AUTO, 45RFE DGK = TRANSMISSION - 4-SPD. AUTOMATIC,42RE DGT = TRANSMISSION - 4-SPD. AUTOMATIC,46RE DGO = AUTO. TRANS.

Manifold, Intake and Exhaust
Figure 3.9L-810

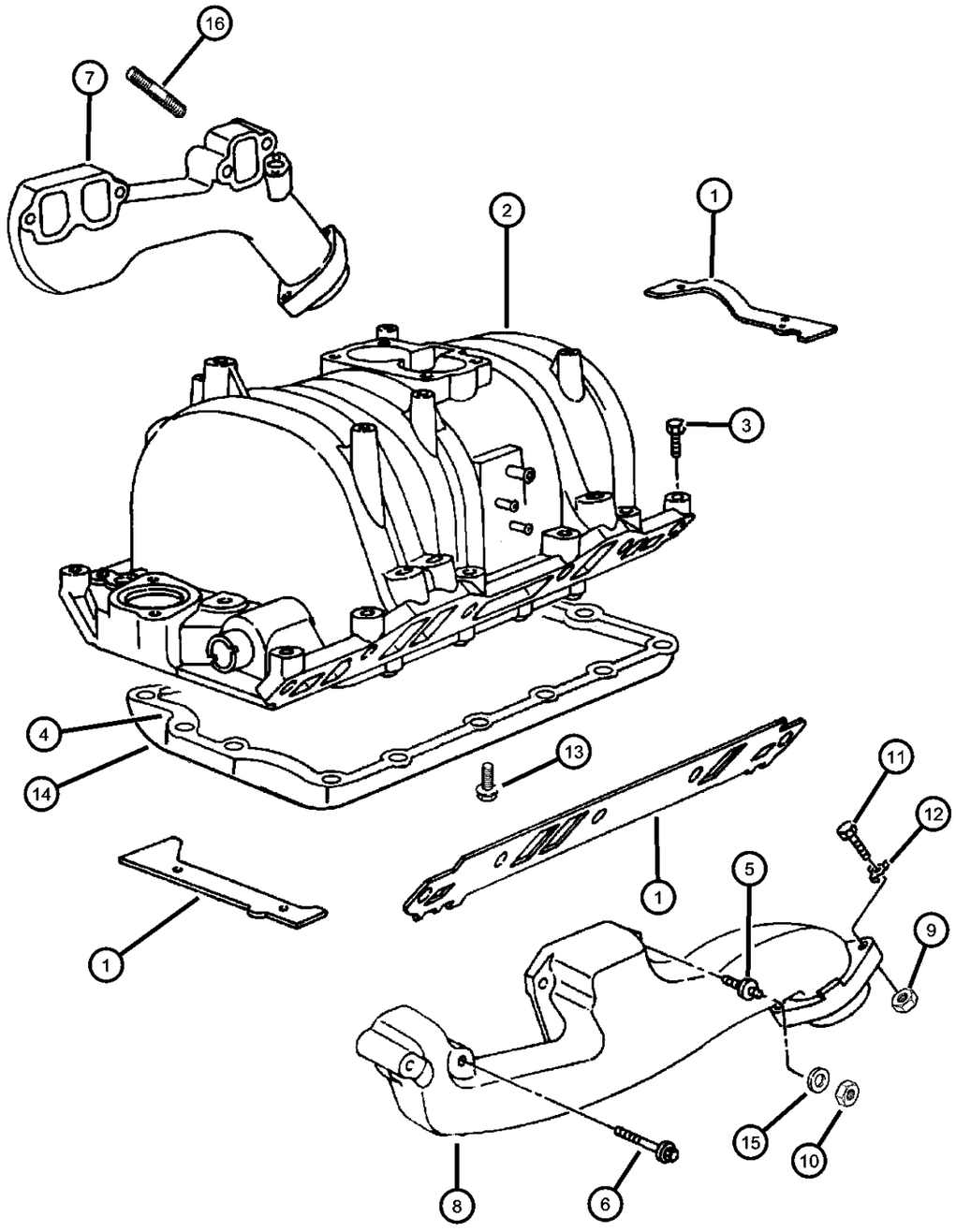

ITEM	PART NUMBER	QTY	LINE	SERIES	BODY	ENGINE	TRANS	TRIM	DESCRIPTION

NOTE: Packages Do Not Contain Gaskets For All Required Sealing. R.T.V. Sealer And Gasket Eliminator Must Also Be Used.
NOTE: EH0=All 3.9L Engines

1	04897382AC	1				EH0			GASKET PACKAGE, Intake Manifold
2	05139846AA	1				EH0			MANIFOLD, Intake
3	06035967AA	12				EH0, EM0			SCREW AND WASHER, Hex Head
4	53006601	1				EH0			GASKET, Intake Manifold Pan
5	06035184	1				EH0			STUD, .312-18/.312-24x4.125
6	06034806	3				EH0			SCREW AND WASHER, Hex Head, .312-18x3.125
7	53030872	1				EH0			MANIFOLD, Exhaust
8	53010185	1				EH0			MANIFOLD, Exhaust
9	00118615	4				EH0, EM0, EV0			NUT, Hex, .375-16
10	00115729	4				EH0			NUT, Hex, .312 x 24
11	06035375	4				EH0, EM0, EV0			BOLT, Hex Head, .375-16x2.50
12	04004001	4				EH0, EM0, EV0			RETAINER, Exhaust Pipe to Manifold
13	06034583	14				EH0			SCREW AND WASHER, Hex Head, .25-20x.892
14	53006600	1				EH0			PAN, Intake Manifold
15	53010091	4				EH0, EM0			CLAMP, Exhaust Manifold
16	06034643	4				EH0, EM0			STUD, .312-18/.312-24x2.25

DAKOTA (AN)

SERIES	LINE	BODY	ENGINE	TRANSMISSION
L = Quad Cab	1 = Dakota 2WD	31 = CLUB CAB 2-DR 6.5 FT BOX	EPO = 2.5L 4 Cyl.	DDC = TRANSMISSION - 5-SPEED HD MANUAL
L = Regular Cab	5 = Dakota 4WD	61 = REG CAB 6.5 FT BOX	EHO = 3.9L 6 Cyl.	DG4 = TRANSMISSION-MULTI-SPEED AUTO, 45RFE
L = Club Cab		84 = CREW CAB 4-DR W.B.1	EMO = 5.9L 8 Cyl.	DGK = TRANSMISSION - 4-SPD. AUTOMATIC,42RE
			EVO = 4.7L Magnum	DGT = TRANSMISSION - 4-SPD. AUTOMATIC,46RE
			EHC = 3.9L SMPI V6	DGO = AUTO. TRANS.
			EML = 5.9L V8 MPI Engine	
			EPE = 2.5L POWER TECH I-4 Cyl.	
			EVA = 4.7L V8 MPI	

Manifold, Heat Shields
Figure 3.9L-820

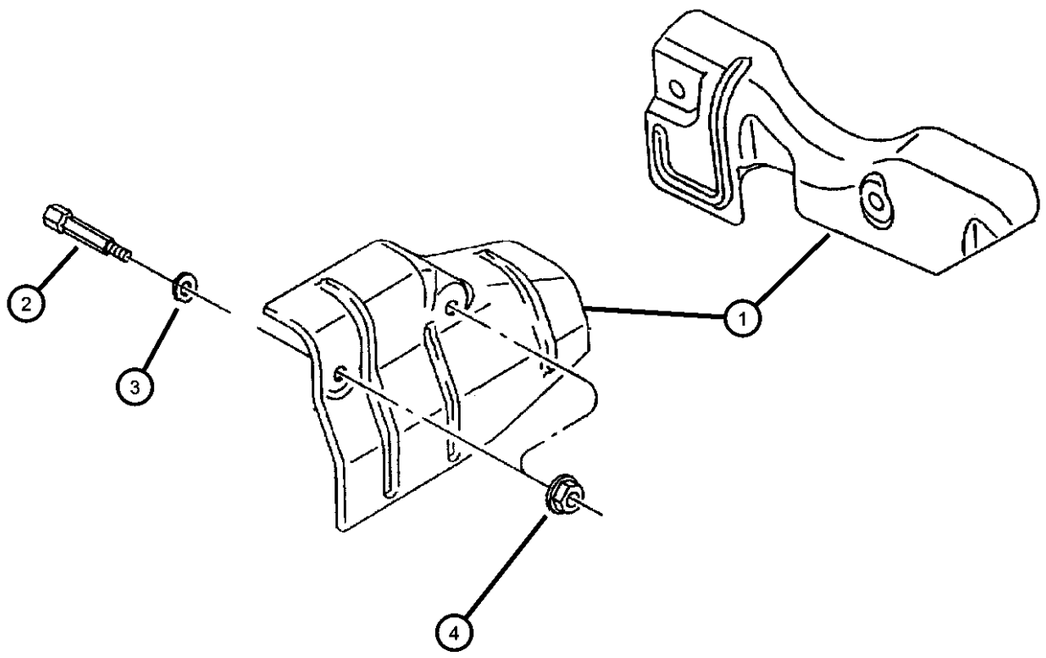

ITEM	PART NUMBER	QTY	LINE	SERIES	BODY	ENGINE	TRANS	TRIM	DESCRIPTION
NTOE: EH0=All 3.9L Engines									
1									SHIELD, Exhaust Manifold
	53031039	1				EH0			Left
	53031040	1				EH0			Right
2	06035917	3				EH0			SCREW, Hex Head, .312-24x2.81
3	06035917	3							WASHER, (NOT SERVICED)
4	06035917	3							NUT, Hex, .312-24, (NOT SERVICED)

DAKOTA (AN)

SERIES	LINE	BODY	ENGINE	TRANSMISSION
L = Quad Cab L = Regular Cab L = Club Cab	1 = Dakota 2WD 5 = Dakota 4WD	31 = CLUB CAB 2-DR 6.5 FT BOX 61 = REG CAB 6.5 FT BOX 84 = CREW CAB 4-DR W.B.1	EPO = 2.5L 4 Cyl. EHO = 3.9L 6 Cyl. EMO = 5.9L 8 Cyl. EVO = 4.7L Magnum EHC = 3.9L SMPI V6 EML = 5.9L V8 MPI Engine EPE = 2.5L POWER TECH I-4 Cyl. EVA = 4.7L V8 MPI	DDC = TRANSMISSION - 5-SPEED HD MANUAL DG4 = TRANSMISSION-MULTI-SPEED AUTO, 45RFE DGK = TRANSMISSION - 4-SPD. AUTOMATIC,42RE DGT = TRANSMISSION - 4-SPD. AUTOMATIC,46RE DGO = AUTO. TRANS.

Crankcase Ventilation
Figure 3.9L-910

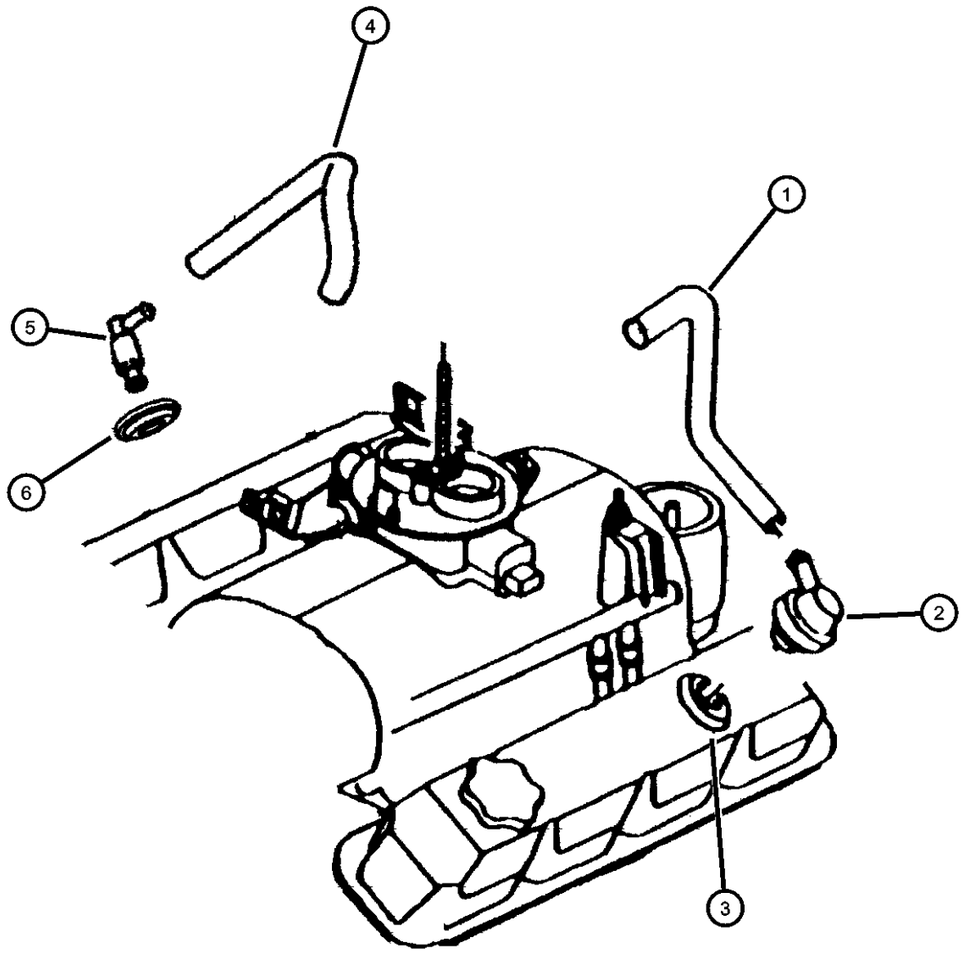

ITEM	PART NUMBER	QTY	LINE	SERIES	BODY	ENGINE	TRANS	TRIM	DESCRIPTION
NOTE: EH0=All 3.9L Engines									
1	53031136AD	1				EH0, EM0			HOSE, Crankcase Vent
2	53030497	1				EH0, EM0			FITTING, Crankcase Vent Tube
3	53030017	1				EH0, EM0			GROMMET, Crankcase Vent
4	53008675AD	1				EH0, EM0			TUBE, PCV Valve
5	53031134	1				EH0			VALVE, Crankcase Vent
6	02946079	1				EH0, EM0			GROMMET, Crankcase Vent

DAKOTA (AN)

SERIES	LINE	BODY	ENGINE	TRANSMISSION
L = Quad Cab L = Regular Cab L = Club Cab	1 = Dakota 2WD 5 = Dakota 4WD	31 = CLUB CAB 2-DR 6.5 FT BOX 61 = REG CAB 6.5 FT BOX 84 = CREW CAB 4-DR W.B.1	EPO = 2.5L 4 Cyl. EHO = 3.9L 6 Cyl. EMO = 5.9L 8 Cyl. EVO = 4.7L Magnum EHC = 3.9L SMPI V6 EML = 5.9L V8 MPI Engine EPE = 2.5L POWER TECH I-4 Cyl. EVA = 4.7L V8 MPI	DDC = TRANSMISSION - 5-SPEED HD MANUAL DG4 = TRANSMISSION-MULTI-SPEED AUTO, 45RFE DGK = TRANSMISSION - 4-SPD. AUTOMATIC,42RE DGT = TRANSMISSION - 4-SPD. AUTOMATIC,46RE DGO = AUTO. TRANS.

Group - 4.7L

Engine 4.7L Eight Cylinder

4.7L-200
Cylinder Head

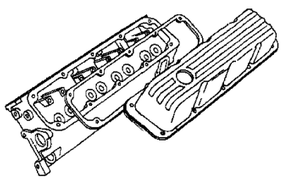

4.7L-300
Cylinder Block

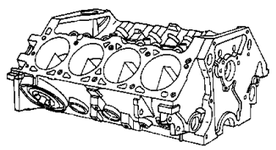

4.7L-400
Crankshaft, Pistons and Torque Converter

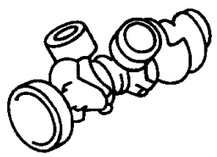

4.7L-500
Camshafts and Valves

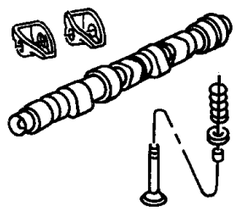

4.7L-600
Timing Belt and Cover

4.7L-700
Engine Oiling

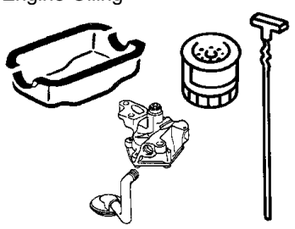

4.7L-800
Manifolds

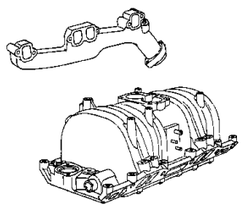

4.7L-900
Crankcase Ventilation

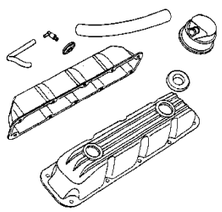

Group - 4.7L Engine 4.7L Eight Cylinder

Illustration Title — Group-Fig. No.

Cylinder Head
Cylinder Head ..... Fig. 4.7L - 210

Cylinder Block
Cylinder Block ..... Fig. 4.7L - 310

Crankshaft, Pistons and Torque Converter
Crankshaft, Piston and Torque Converter ..... Fig. 4.7L - 410

Camshafts and Valves
Camshaft and Valves ..... Fig. 4.7L - 510

Timing Belt and Cover
Timing Cover ..... Fig. 4.7L - 610
Timing Chain and Guides ..... Fig. 4.7L - 620

Engine Oiling
Engine Oiling ..... Fig. 4.7L - 710

Manifolds
Manifold, Intake and Exhaust ..... Fig. 4.7L - 810

Crankcase Ventilation
Crankcase Ventilation 4.7l (EVA) ..... Fig. 4.7L - 910

Cylinder Head
Figure 4.7L-210

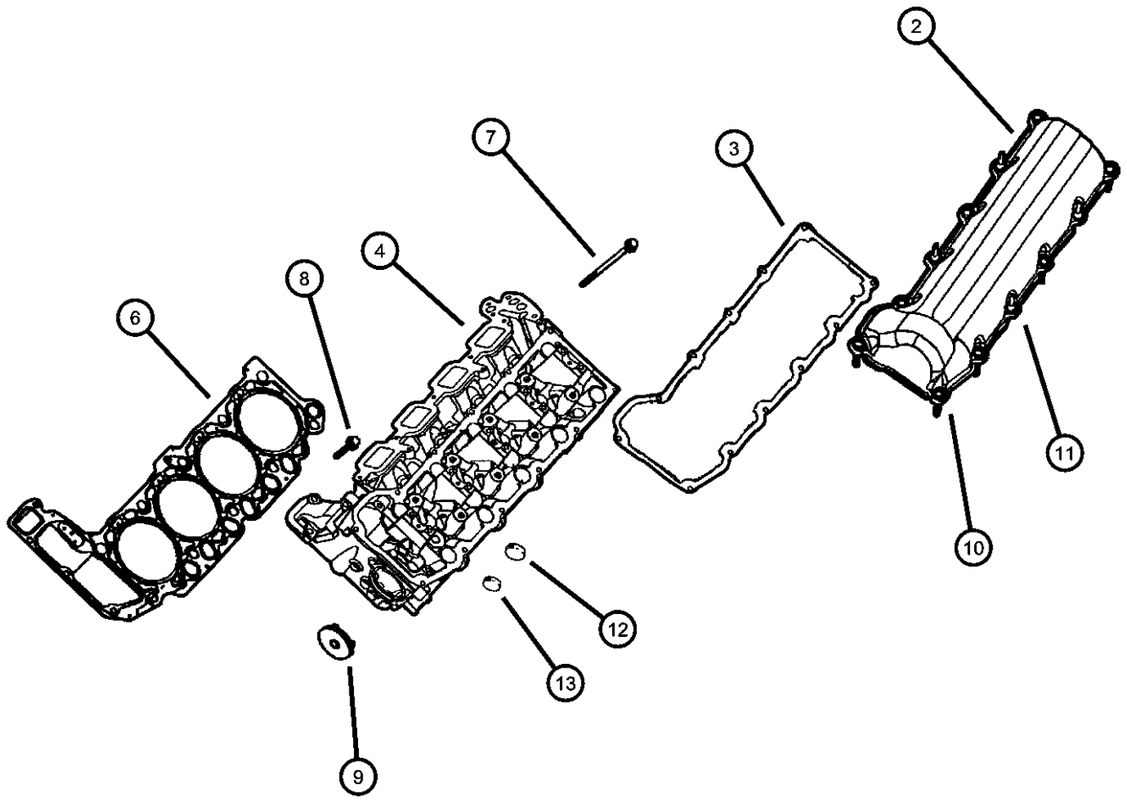

ITEM	PART NUMBER	QTY	LINE	SERIES	BODY	ENGINE	TRANS	TRIM	DESCRIPTION
NOTES: Upper Gasket Package Contains: Cylinder Head and Cylinder Head Cover Gaskets, Intake and Exhaust Manifold Gaskets, Throttle Body									
SALES CODES									
[EV0] = All 4.7L Engines									
-1									GASKET PACKAGE, Engine Upper, See Notes
	05135794AA	1				EV0	DBB		
		1				EV0	DG0		
2									COVER, Cylinder Head
	53020657AB	1				EV0			Left
	53020874AB	1				EV0			Right
3									GASKET, Valve Cover
	53020877	1				EV0			Left
	53020878	1				EV0			Right
4	05012522AA	1				EV0			HEAD, Cylinder, Left
	R5847099								Mopar Reman 4.7L Head w/Valves, Springs, Gasket (EVA) - Left
-5	05012529AA	1				EV0			HEAD, Cylinder, Right
	R6847099								Mopar Reman 4.7L Head w/Valves, Springs, Gasket (EVA) - Right
6	53020673	2				EV0			GASKET, Cylinder Head
7	06504939AA	20				EV0			SCREW AND WASHER, Hex Head
8	06504985AA	8				EV0			SCREW AND WASHER, Hex Head
9	53021031	1				EV0			PLUG, Access Hole
10	53021031	1							SCREW, Serviced in Cylinder Head Cover, (NOT SERVICED)
11	53021031	1							STUD, Serviced in Cylinder Head Cover, (NOT SERVICED)
12	04556020	2				EV0			PLUG, Core, 1.25 Diameter
13	04556017	1				EV0			PLUG, Core

DAKOTA (AN)

SERIES	LINE	BODY	ENGINE	TRANSMISSION
L = Quad Cab	1 = Dakota 2WD	31 = CLUB CAB 2-DR 6.5 FT BOX	EPO = 2.5L 4 Cyl.	DDC = TRANSMISSION - 5-SPEED HD MANUAL
L = Regular Cab	5 = Dakota 4WD	61 = REG CAB 6.5 FT BOX	EHO = 3.9L 6 Cyl.	DG4 = TRANSMISSION-MULTI-SPEED AUTO, 45RFE
L = Club Cab		84 = CREW CAB 4-DR W.B.1	EMO = 5.9L 8 Cyl.	DGK = TRANSMISSION - 4-SPD. AUTOMATIC,42RE
			EVO = 4.7L Magnum	DGT = TRANSMISSION - 4-SPD. AUTOMATIC,46RE
			EHC = 3.9L SMPI V6	DGO = AUTO. TRANS.
			EML = 5.9L V8 MPI Engine	
			EPE = 2.5L POWER TECH I-4 Cyl.	
			EVA = 4.7L V8 MPI	

Cylinder Block
Figure 4.7L-310

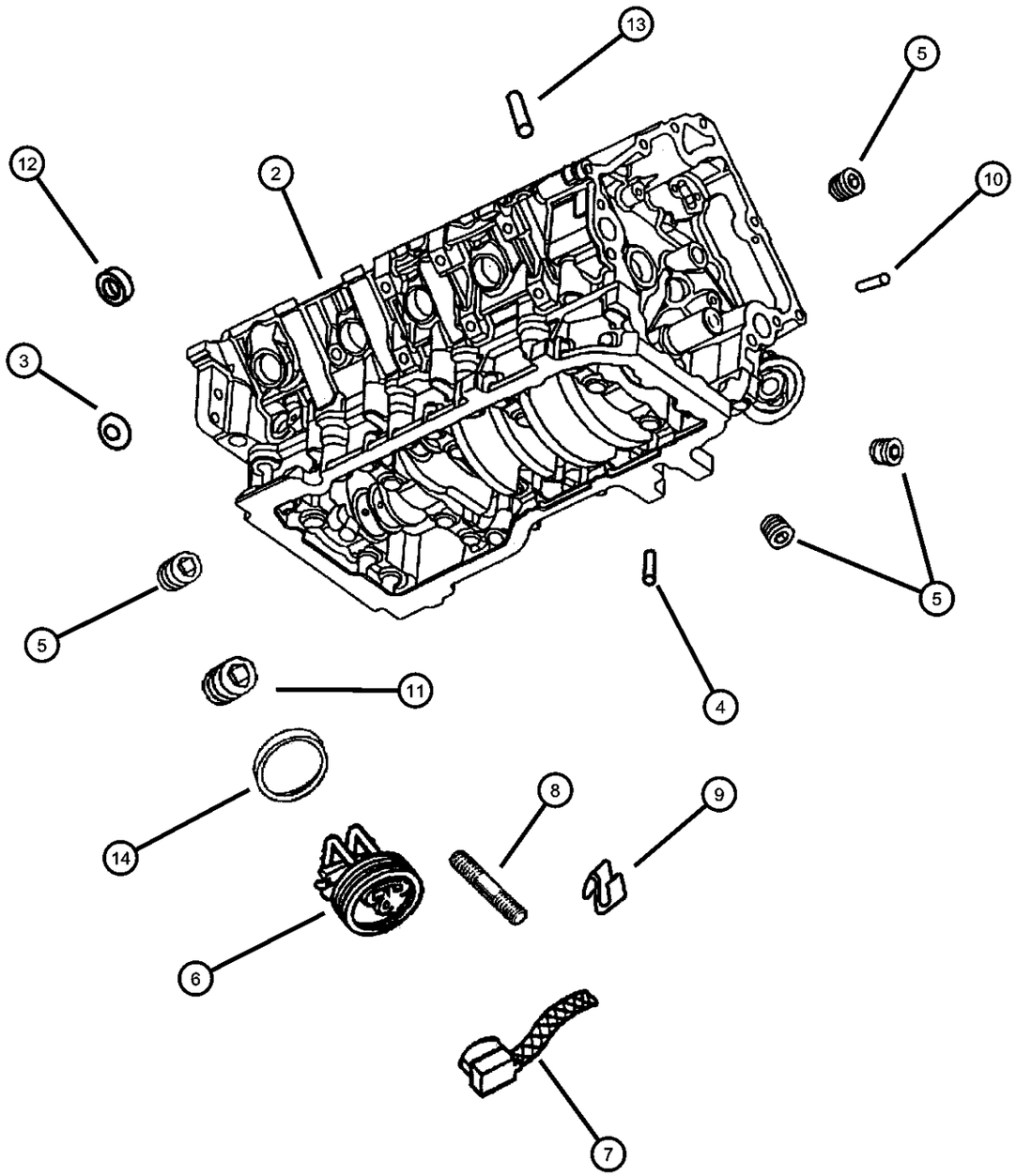

ITEM	PART NUMBER	QTY	LINE	SERIES	BODY	ENGINE	TRANS	TRIM	DESCRIPTION
NOTES: Lower Gasket Package contains: Front and Rear Crankshaft Seals, Oil Pick Up Tube Seal; Oil Pan, Chain Case and Water Pump Gaskets									
[EV0] = All 4.7L Engines									
[DG0] = All Automatic Transmissions									
-1									GASKET PACKAGE, Engine Lower, See Notes
	05135796AA	1				EV0	DBB		
		1				EV0	DG0		
2	05072374AA	1				EV0			BLOCK, Short, Contains: Block, Bed Plate, Crank, Rods, Pistons, Rings, Oil Pump, Oil Pan
	04761844AC								Mopar 5W-30 Engine Oil Gallon
	04761838AB								Mopar 5W-20 Engine Oil Quart
3	06034804	10				EV0			PLUG, Core, 1.39 Diameter
4	06505457AA	3				EV0			PIN
5	06036114AA	4				EV0			PLUG, Pipe
6	56041304AB	1				EV0			HEATER, Engine Block
7	56020234	1							CORD, Engine Block Heater
8	56020234	1							SCREW, [.375-16x.625], (NOT SERVICED)
9	56020234	1							CLIP, (NOT SERVICED)
10	53021049	2				EV0			DOWEL
11	06034366	2				EV0			SCREW
12	04556019	1				EV0			PLUG, Cylinder Block Oil Hole
13	06505458AA	4				EV0			PIN
14	06501445	AR				EH0, EM0, EV0			O RING, Engine Block Heater
-15	05240849	4				EV0			DOWEL, Block To Clutch Housing

DAKOTA (AN)

SERIES	LINE	BODY	ENGINE	TRANSMISSION
L = Quad Cab L = Regular Cab L = Club Cab	1 = Dakota 2WD 5 = Dakota 4WD	31 = CLUB CAB 2-DR 6.5 FT BOX 61 = REG CAB 6.5 FT BOX 84 = CREW CAB 4-DR W.B.1	EPO = 2.5L 4 Cyl. EHO = 3.9L 6 Cyl. EMO = 5.9L 8 Cyl. EVO = 4.7L Magnum EHC = 3.9L SMPI V6 EML = 5.9L V8 MPI Engine EPE = 2.5L POWER TECH I-4 Cyl. EVA = 4.7L V8 MPI	DDC = TRANSMISSION - 5-SPEED HD MANUAL DG4 = TRANSMISSION-MULTI-SPEED AUTO, 45RFE DGK = TRANSMISSION - 4-SPD. AUTOMATIC,42RE DGT = TRANSMISSION - 4-SPD. AUTOMATIC,46RE DGO = AUTO. TRANS.

Crankshaft, Piston and Torque Converter
Figure 4.7L-410

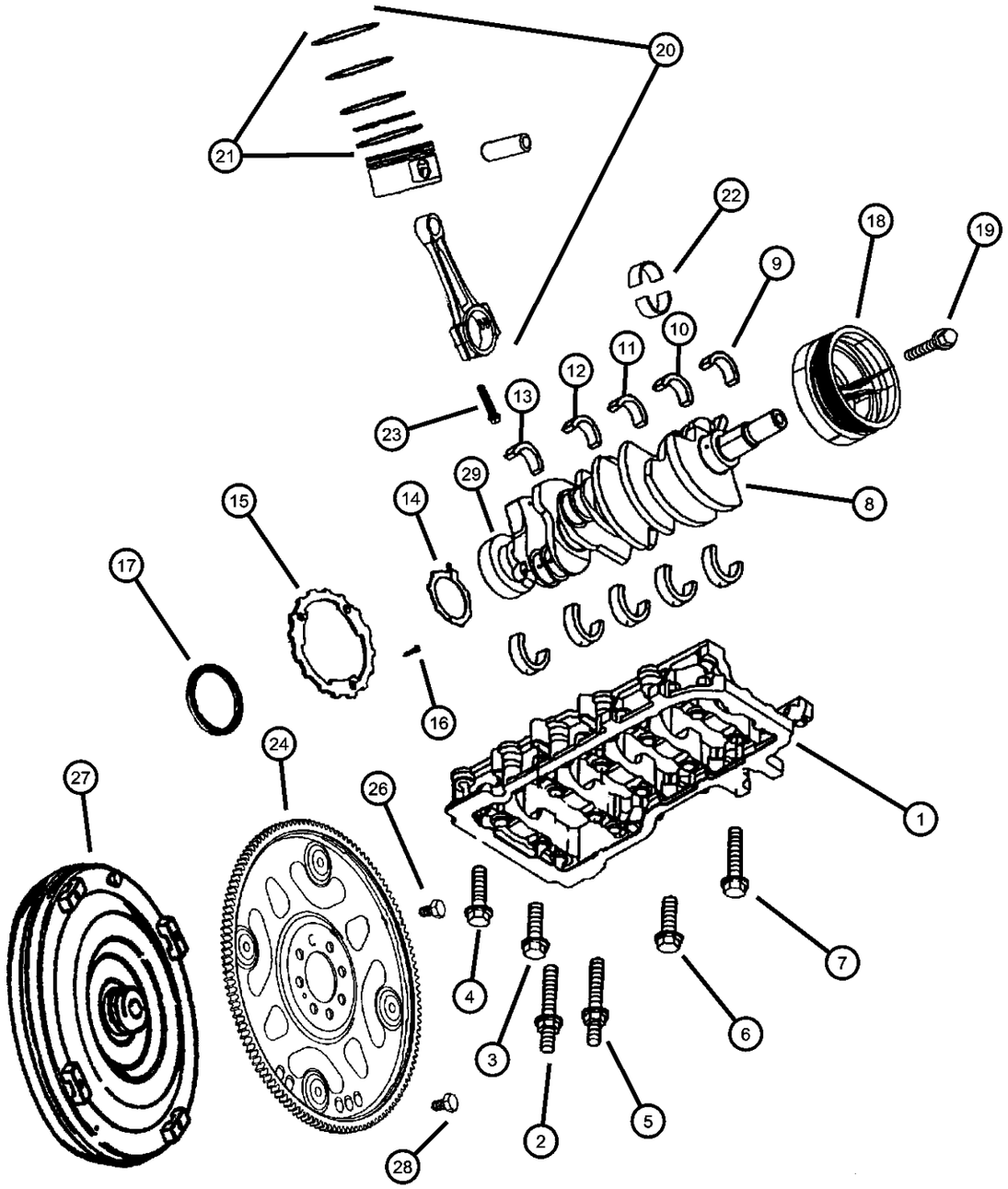

ITEM	PART NUMBER	QTY	LINE	SERIES	BODY	ENGINE	TRANS	TRIM	DESCRIPTION
NOTE: EV0=All 4.7L Engines DG0=All Automatic Transmissions DG4=Multi-Speed Transmission									
1	05240849	4							BEDPLATE, Serviced in Short Block Assembly, (NOT SERVICED)
2	06505151AA	2				EV0			STUD
3	06102047AA	6				EV0			SCREW, Hex Head, M8x1.25x50
4	06504411	7				EV0			SCREW
5	06505150AA	1				EV0			STUD
6	06504410	5				EV0			SCREW, Hex Head
7	06505394AA	7				EV0			SCREW AND WASHER
8	53020939AB	1				EV0			CRANKSHAFT
9	05013586AB	AR				EV0			BEARING PACKAGE, Crankshaft, B Grade
10	05014183AA	5				EV0			BEARING PACKAGE, Crankshaft, A Grade
11	05014186AA	5				EV0			BEARING PACKAGE, Crankshaft, C Grade
12	05013587AA	AR				EV0			BEARING PACKAGE, Crankshaft, .025mm Undersize
13	05013588AA	AR				EV0			BEARING PACKAGE, Crankshaft, .25mm Undersize
14	05012356AB	1				EV0			WASHER PACKAGE, Washer
15	05012356AB	1							TONE RING, Sensor, Serviced in Crankshaft Assembly, (NOT SERVICED)
16	06504480	3				EV0			SCREW, M6x1x25
17	53020788	1				EV0			SEAL, Crankshaft Bearing Oil
18	53020689AB	1				EV0			DAMPER, Crankshaft
19	06504415	1				EV0			SCREW AND WASHER
20	05012362AB	8				EV0			PISTON PIN AND ROD, STD
21	05012364AB	8				EV0			RING PACKAGE, Piston, Standard Size
22	05012363AB	8				EV0			BEARING PACKAGE, Connecting Rod, Standard
23	06504720	16				EV0			BOLT, Connecting Rod
24	52104048	1				EV0	DG0		PLATE, Torque Converter Drive
-25	53020688	1				EV0	DBB		FLYWHEEL
26	06503465	8				EV0	DG0		BOLT, Drive Plate and Flywheel

DAKOTA (AN)

SERIES	LINE	BODY	ENGINE	TRANSMISSION
L = Quad Cab L = Regular Cab L = Club Cab	1 = Dakota 2WD 5 = Dakota 4WD	31 = CLUB CAB 2-DR 6.5 FT BOX 61 = REG CAB 6.5 FT BOX 84 = CREW CAB 4-DR W.B.1	EPO = 2.5L 4 Cyl. EHO = 3.9L 6 Cyl. EMO = 5.9L 8 Cyl. EVO = 4.7L Magnum EHC = 3.9L SMPI V6 EML = 5.9L V8 MPI Engine EPE = 2.5L POWER TECH I-4 Cyl. EVA = 4.7L V8 MPI	DDC = TRANSMISSION - 5-SPEED HD MANUAL DG4 = TRANSMISSION-MULTI-SPEED AUTO, 45RFE DGK = TRANSMISSION - 4-SPD. AUTOMATIC,42RE DGT = TRANSMISSION - 4-SPD. AUTOMATIC,46RE DGO = AUTO. TRANS.

AR = use ase required - = Non illustrrated part

Crankshaft, Piston and Torque Converter
Figure 4.7L-410

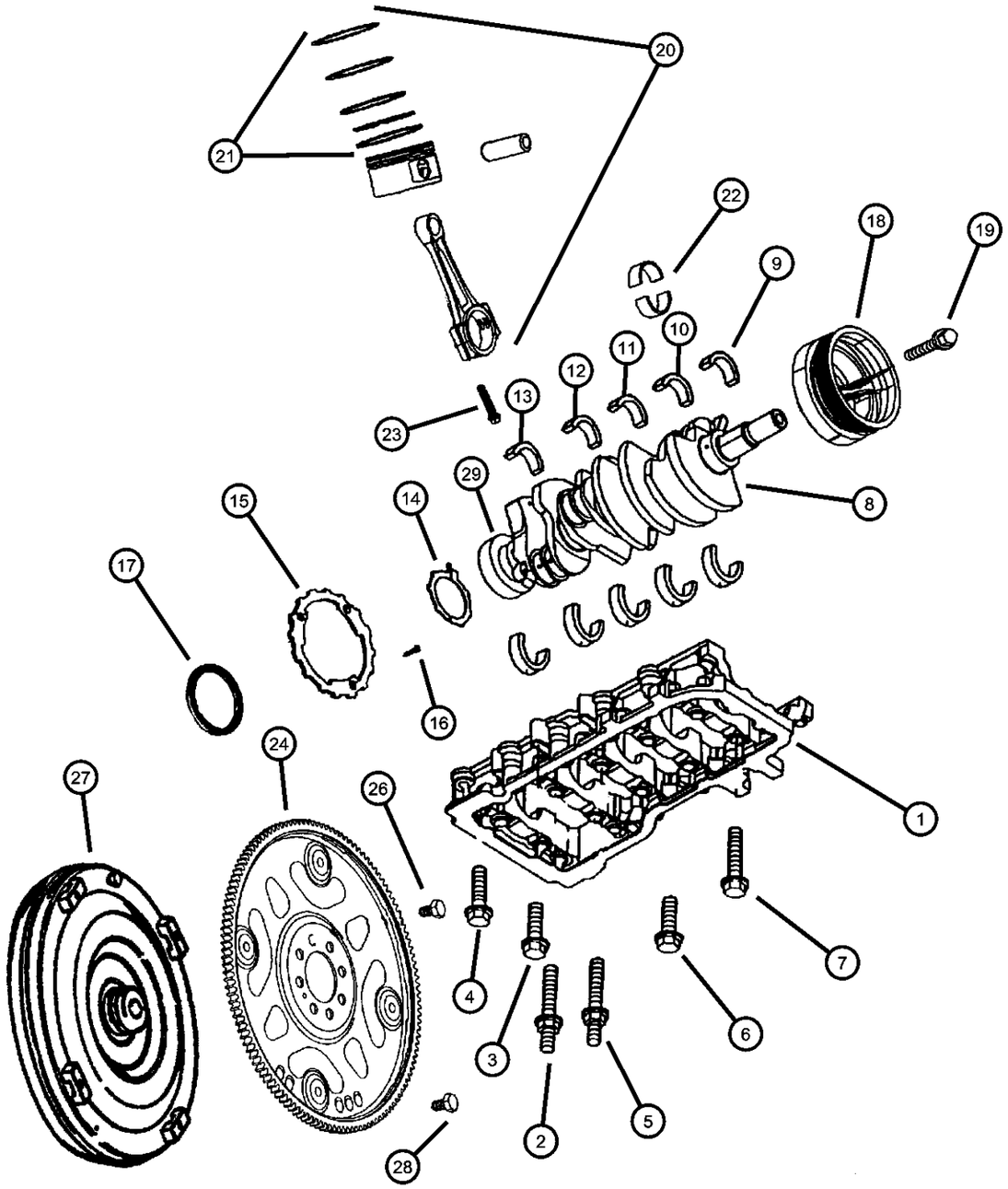

ITEM	PART NUMBER	QTY	LINE	SERIES	BODY	ENGINE	TRANS	TRIM	DESCRIPTION
27	04736582	1	1				DG4		TORQUE CONVERTER
	R4736582								Mopar Remanufactured Part
28	01949765	4					DG0		SCREW, Hex Head Header Point, .312-24x.44
29	53009180AB	1				EV0	DBB		BEARING, Pilot

DAKOTA (AN)

SERIES	LINE	BODY	ENGINE	TRANSMISSION
L = Quad Cab L = Regular Cab L = Club Cab	1 = Dakota 2WD 5 = Dakota 4WD	31 = CLUB CAB 2-DR 6.5 FT BOX 61 = REG CAB 6.5 FT BOX 84 = CREW CAB 4-DR W.B.1	EPO = 2.5L 4 Cyl. EHO = 3.9L 6 Cyl. EMO = 5.9L 8 Cyl. EVO = 4.7L Magnum EHC = 3.9L SMPI V6 EML = 5.9L V8 MPI Engine EPE = 2.5L POWER TECH I-4 Cyl. EVA = 4.7L V8 MPI	DDC = TRANSMISSION - 5-SPEED HD MANUAL DG4 = TRANSMISSION-MULTI-SPEED AUTO, 45RFE DGK = TRANSMISSION - 4-SPD. AUTOMATIC,42RE DGT = TRANSMISSION - 4-SPD. AUTOMATIC,46RE DGO = AUTO. TRANS.

Camshaft and Valves
Figure 4.7L-510

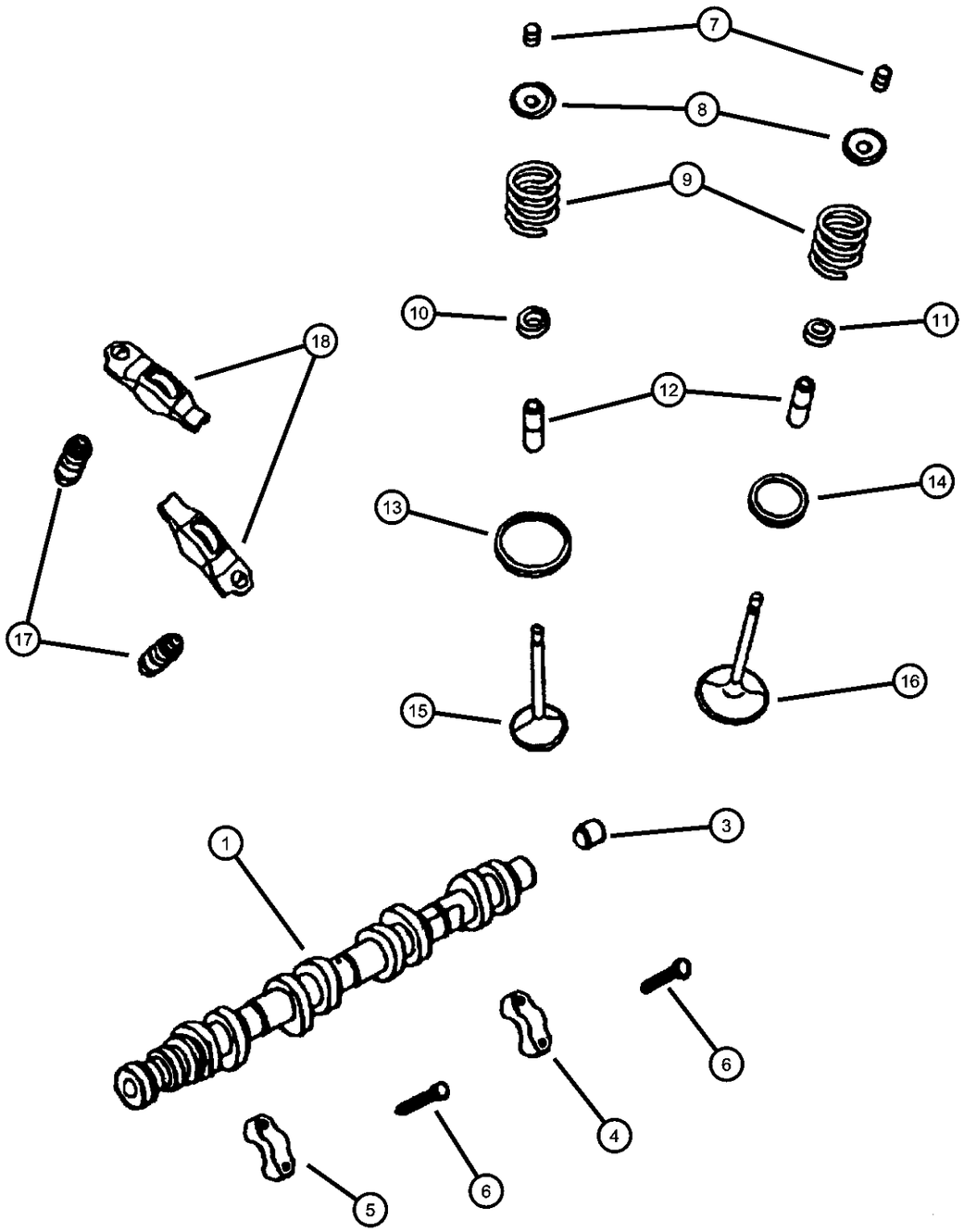

ITEM	PART NUMBER	QTY	LINE	SERIES	BODY	ENGINE	TRANS	TRIM	DESCRIPTION
NOTE: EV0=All 4.7L Engines									
1	53021159AA	1				EV0			CAMSHAFT, Engine, Left
-2	53021160AA	1				EV0			CAMSHAFT, Engine, Right
3	53021161AA	1				EV0			PLUG, Camshaft
4	53021161AA	1							CAP, Serviced in Cylinder Head Assembly, (NOT SERVICED)
5	53021161AA	1							CAP, Serviced in Cylinder Head Assembly, (NOT SERVICED)
6	06505034AA	10				EV0			SCREW, M6x1x40
7	04536513	32				EV0			LOCK, Valve Spring Retainer
8	53020750	16				EV0			RETAINER, Valve Spring
9	53020749	16				EV0			SPRING, Valve
10	53020752AB	16				EV0			SEAL, Valve Guide, Intake
11	53020752AB	16				EV0			SEAL, Valve Guide, Exhaust
12	53020752AB	16							GUIDE, Intake/Exhaust Valve, Standard Size, Serviced in Cylinder Head Assembly, (NOT SERVICED)
13	53020752AB	16							INSERT, Intake Valve, Serviced in Cylinder Head Assembly, (NOT SERVICED)
14	53020752AB	16							INSERT, Exhaust Valve, Serviced in Cylinder Head Assembly, (NOT SERVICED)
15	53020747AB	8				EV0			VALVE, Intake, Standard
16	53020748	8				EV0			VALVE, Exhaust, Standard
17	53021077	16				EV0			ADJUSTER, Valve Lash
18	53020742	16				EV0			ROCKER ARM, Valve

DAKOTA (AN)

SERIES	LINE	BODY	ENGINE	TRANSMISSION
L = Quad Cab	1 = Dakota 2WD	31 = CLUB CAB 2-DR 6.5 FT BOX	EPO = 2.5L 4 Cyl.	DDC = TRANSMISSION - 5-SPEED HD MANUAL
L = Regular Cab	5 = Dakota 4WD	61 = REG CAB 6.5 FT BOX	EHO = 3.9L 6 Cyl.	DG4 = TRANSMISSION-MULTI-SPEED AUTO, 45RFE
L = Club Cab		84 = CREW CAB 4-DR W.B.1	EMO = 5.9L 8 Cyl.	DGK = TRANSMISSION - 4-SPD. AUTOMATIC,42RE
			EVO = 4.7L Magnum	DGT = TRANSMISSION - 4-SPD. AUTOMATIC,46RE
			EHC = 3.9L SMPI V6	DGO = AUTO. TRANS.
			EML = 5.9L V8 MPI Engine	
			EPE = 2.5L POWER TECH I-4 Cyl.	
			EVA = 4.7L V8 MPI	

Timing Cover
Figure 4.7L-610

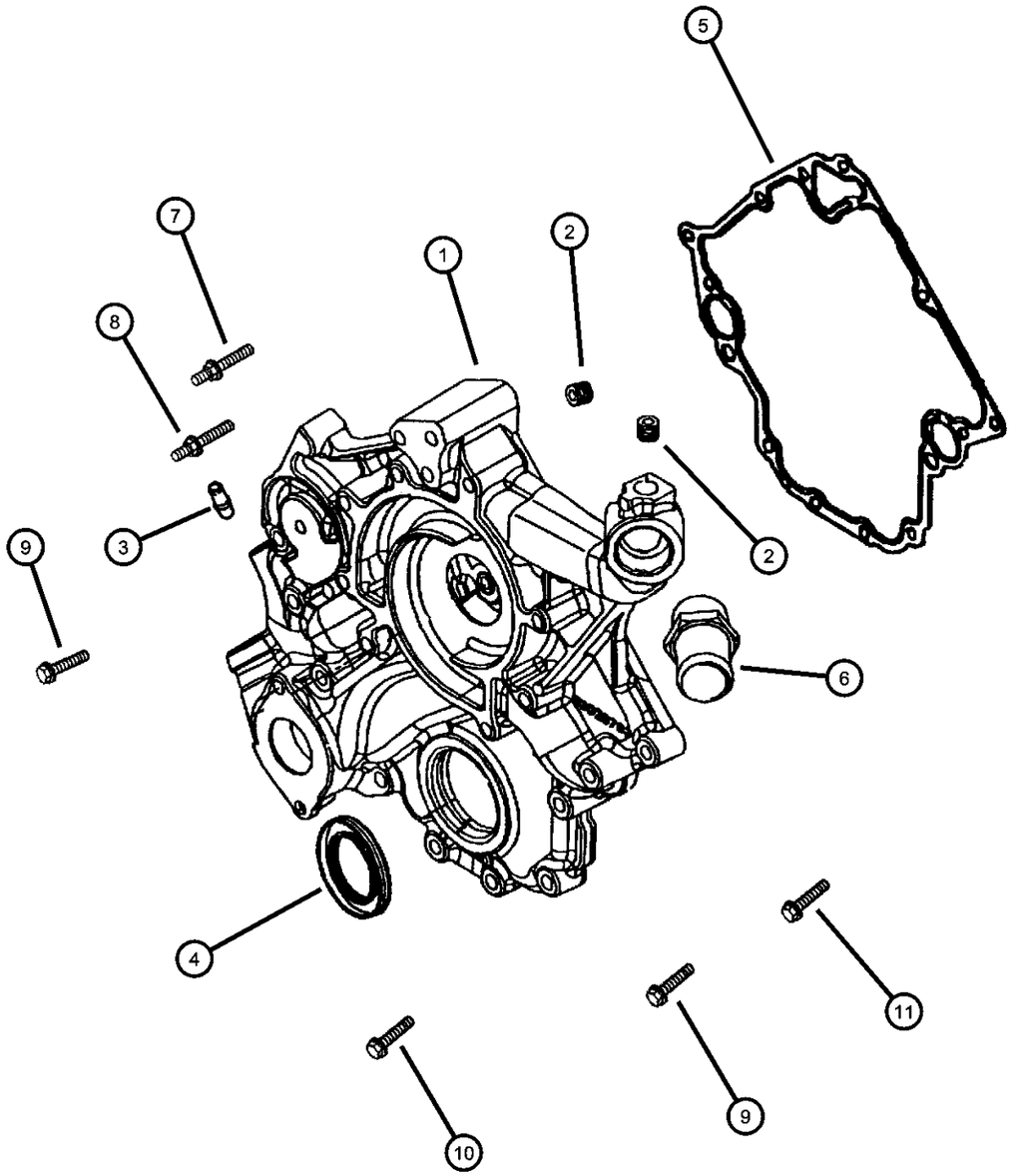

ITEM	PART NUMBER	QTY	LINE	SERIES	BODY	ENGINE	TRANS	TRIM	DESCRIPTION
NOTE: EV0=All 4.7L Engines									
1	53020791	1				EV0			COVER, Timing Case
2	06034331	3				EV0			PLUG, Hex Socket, 3/8-18NPTx.475
3	06035854	2				EV0			FITTING, Y-Style
4	53020790	1				EV0			SEAL, Crankshaft Oil, Front
5	53020862	1				EV0			GASKET, Chain Case Cover
6	06035961AA	1				EV0			PIPE FITTING, Chain Case Cover, .375-18x2
7	06505293AA	1				EV0			STUD
8	06505019AA	1				EV0			STUD
9	06101998	5				EV0			SCREW AND WASHER, Hex
10									SCREW AND WASHER, M10x1.50x45.00
	06101985	6				EV0	DBB		
		8				EV0	DG0		
11	06505579AA	2				EV0			SCREW AND WASHER

DAKOTA (AN)

SERIES	LINE	BODY	ENGINE	TRANSMISSION
L = Quad Cab	1 = Dakota 2WD	31 = CLUB CAB 2-DR 6.5 FT BOX	EPO = 2.5L 4 Cyl.	DDC = TRANSMISSION - 5-SPEED HD MANUAL
L = Regular Cab	5 = Dakota 4WD	61 = REG CAB 6.5 FT BOX	EHO = 3.9L 6 Cyl.	DG4 = TRANSMISSION-MULTI-SPEED AUTO, 45RFE
L = Club Cab		84 = CREW CAB 4-DR W.B.1	EMO = 5.9L 8 Cyl.	DGK = TRANSMISSION - 4-SPD. AUTOMATIC,42RE
			EVO = 4.7L Magnum	DGT = TRANSMISSION - 4-SPD. AUTOMATIC,46RE
			EHC = 3.9L SMPI V6	DGO = AUTO. TRANS.
			EML = 5.9L V8 MPI Engine	
			EPE = 2.5L POWER TECH I-4 Cyl.	
			EVA = 4.7L V8 MPI	

Timing Chain and Guides
Figure 4.7L-620

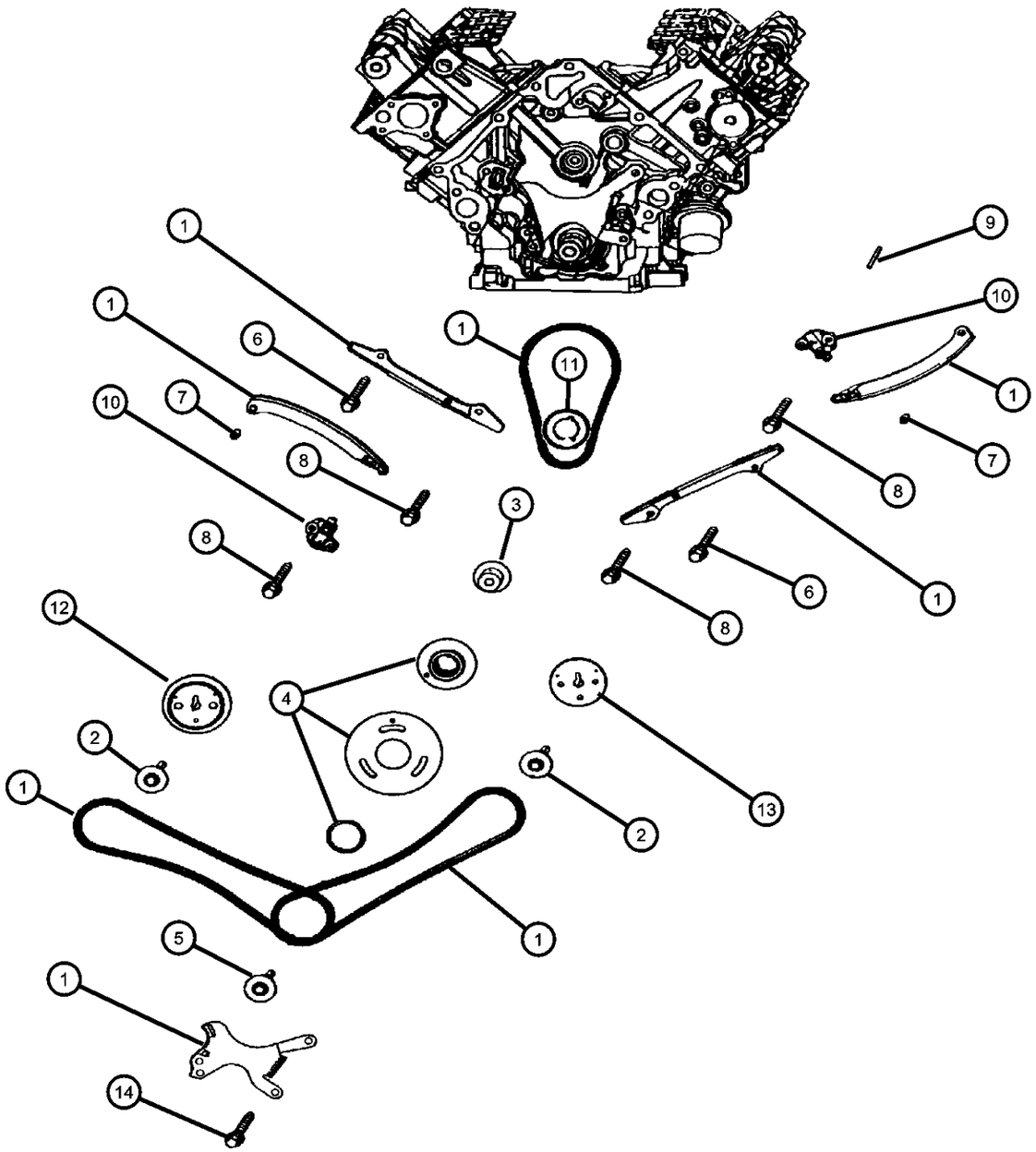

ITEM	PART NUMBER	QTY	LINE	SERIES	BODY	ENGINE	TRANS	TRIM	DESCRIPTION
NOTE: EV0=All 4.7L Engines									
1	05013867AA	1				EV0			TIMING DRIVE KIT, Engine
2	06504429	2				EV0			SCREW AND WASHER, Hex
3	53020835	1				EV0			SHAFT, Idler
4	05013868AB	1				EV0			SPROCKET, Idler
5	06504370	1				EV0			SCREW AND WASHER, Hex
6	06102111AA	2				EV0			SCREW AND WASHER
7	06504440	2				EV0			SCREW
8	06503257	6				EV0			BOLT, Hex Head, M8x1.25x37.50
9	06504471	1				EV0			KEY, Woodruff
10									TENSIONER, Chain
	53020779	1				EV0			Right
	53021168AA	1				EV0			Left
11	53020679	1				EV0			SPROCKET, Crankshaft
12	53021169AA	1				EV0			SPROCKET, Camshaft, Right
13	53020938	1				EV0			SPROCKET, Camshaft, Left
14	06100932	2				EV0			BOLT, Hex
-15	53020781	2				EV0			GUIDE, Timing Chain
-16	53020681	1				EV0			TENSIONER, Chain, Primary

DAKOTA (AN)

SERIES	LINE	BODY	ENGINE	TRANSMISSION
L = Quad Cab L = Regular Cab L = Club Cab	1 = Dakota 2WD 5 = Dakota 4WD	31 = CLUB CAB 2-DR 6.5 FT BOX 61 = REG CAB 6.5 FT BOX 84 = CREW CAB 4-DR W.B.1	EPO = 2.5L 4 Cyl. EHO = 3.9L 6 Cyl. EMO = 5.9L 8 Cyl. EVO = 4.7L Magnum EHC = 3.9L SMPI V6 EML = 5.9L V8 MPI Engine EPE = 2.5L POWER TECH I-4 Cyl. EVA = 4.7L V8 MPI	DDC = TRANSMISSION - 5-SPEED HD MANUAL DG4 = TRANSMISSION-MULTI-SPEED AUTO, 45RFE DGK = TRANSMISSION - 4-SPD. AUTOMATIC,42RE DGT = TRANSMISSION - 4-SPD. AUTOMATIC,46RE DGO = AUTO. TRANS.

Engine Oiling
Figure 4.7L-710

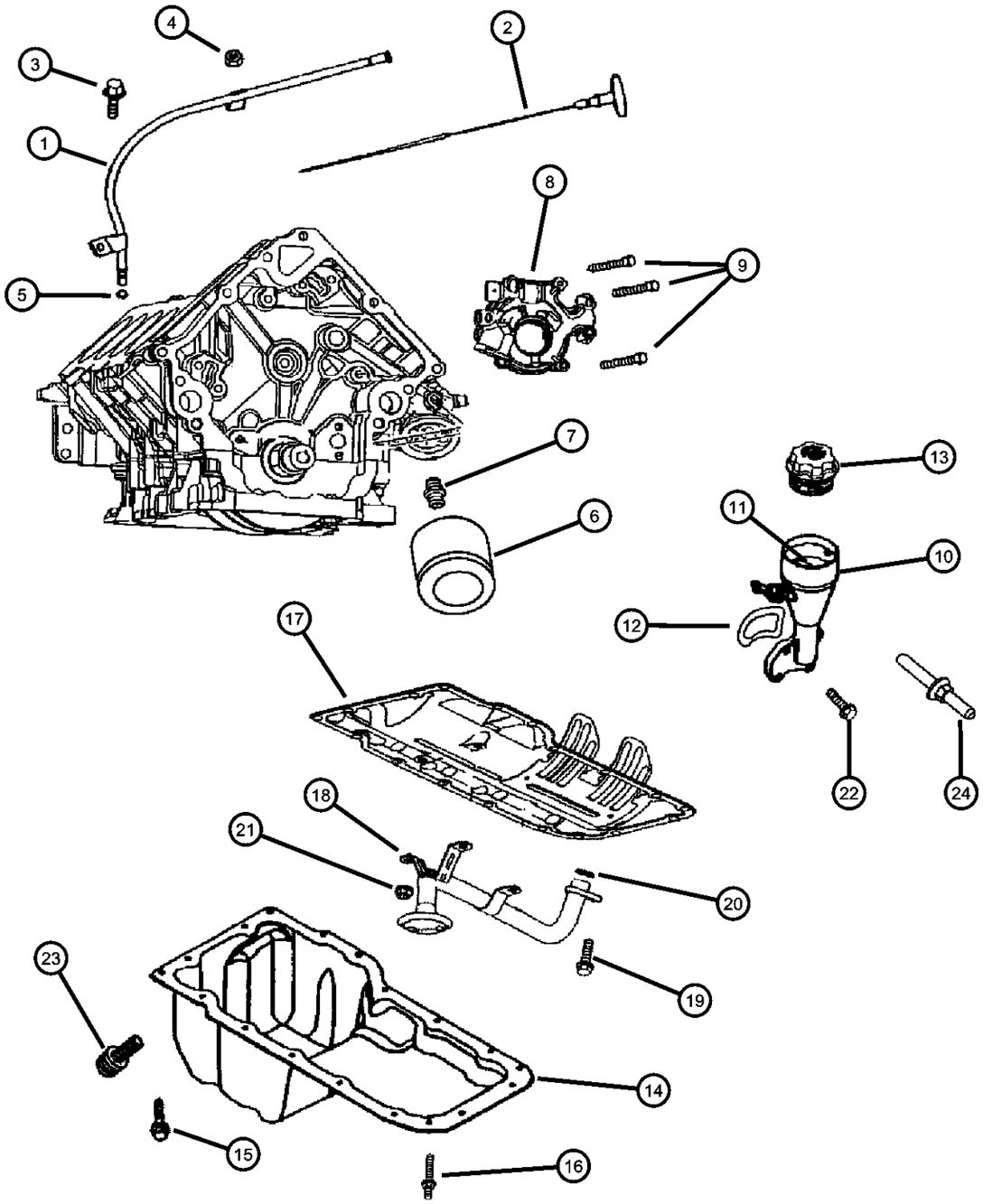

ITEM	PART NUMBER	QTY	LINE	SERIES	BODY	ENGINE	TRANS	TRIM	DESCRIPTION
NOTE: EV0=All 4.7L Engines									
1	53021188AA	1				EV0			TUBE, Engine Oil Indicator
2	53021003	1				EV0			INDICATOR, Engine Oil Level
3	06504810AA	1				EV0			SCREW AND WASHER, Hex
4	06504810AA	1							NUT, M6x1.00, (NOT SERVICED)
5	53021144AA	1				EV0			O RING, Engine Oil Indicator
6	05281090	1				EV0			FILTER, Engine Oil
	0FE00292								Canadian Aftermarket Part
	05281090BA								BULK PACK (12)
	77060018								Performance Mobil 1, 15W - 50 Tri-Synthetic Engine Oil-Recommended Fill for 6.1L & 8.3L
	P5007323								Performance Mobil 1, 5W - 30 Tri-Synthetic Engine Oil, Quart
7	53007563	1				EV0			CONNECTOR, Oil Filter
8	53020827	1				EV0			PUMP, Engine Oil
9	06100932	2				EV0			BOLT, Hex
10	53020890	1				EV0			HOUSING, Oil Fill
11									BAFFLE, Oil Fill, None
	53032126AA	1				EV0	DBB		
		1				EV0	DG0		
12	53020889	1				EV0			GASKET, Oil Fill Housing
13	53020880	1				EV0			CAP, Oil Filler
14	53020901	1				EV0			PAN, Engine Oil
15	06504810AA	17				EV0			SCREW AND WASHER, Hex
16	06505889AA	1				EV0			STUD
17	53020675AB	1				EV0			GASKET, Oil Pan
18	53020828	1				EV0			TUBE, Oil Pickup
19	06102046AA	1				EV0			SCREW AND WASHER
20	53020861	1				EV0			SEAL, Oil Pick Up Tube
21	06502756	3				EV0			NUT, Hex Lock, M8x1.25
22	06505504AA	3				EV0			SCREW, Oil Filler Housing Mounting

DAKOTA (AN)

SERIES	LINE	BODY	ENGINE	TRANSMISSION
L = Quad Cab L = Regular Cab L = Club Cab	1 = Dakota 2WD 5 = Dakota 4WD	31 = CLUB CAB 2-DR 6.5 FT BOX 61 = REG CAB 6.5 FT BOX 84 = CREW CAB 4-DR W.B.1	EPO = 2.5L 4 Cyl. EHO = 3.9L 6 Cyl. EMO = 5.9L 8 Cyl. EVO = 4.7L Magnum EHC = 3.9L SMPI V6 EML = 5.9L V8 MPI Engine EPE = 2.5L POWER TECH I-4 Cyl. EVA = 4.7L V8 MPI	DDC = TRANSMISSION - 5-SPEED HD MANUAL DG4 = TRANSMISSION-MULTI-SPEED AUTO, 45RFE DGK = TRANSMISSION - 4-SPD. AUTOMATIC,42RE DGT = TRANSMISSION - 4-SPD. AUTOMATIC,46RE DGO = AUTO. TRANS.

Engine Oiling
Figure 4.7L-710

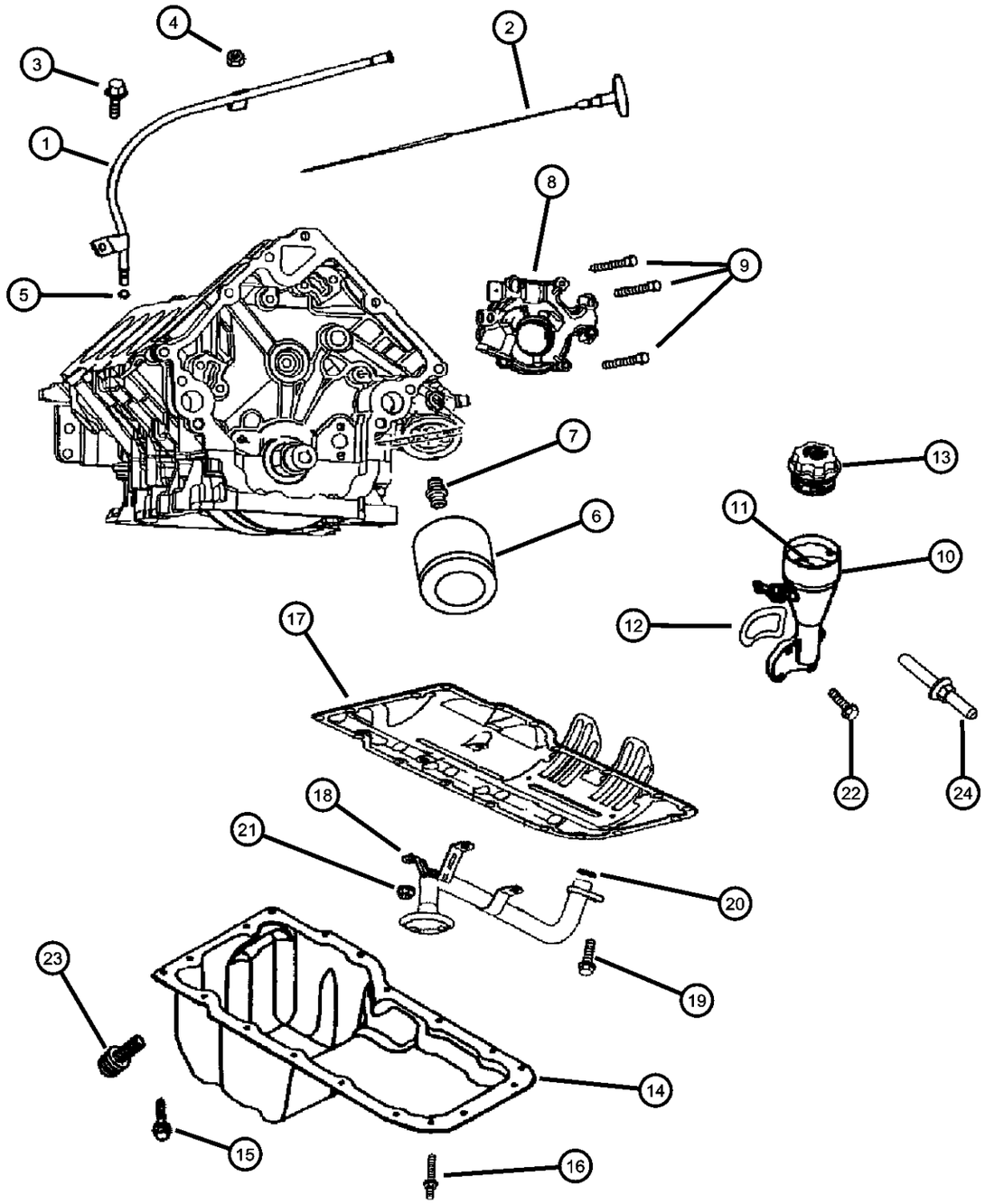

ITEM	PART NUMBER	QTY	LINE	SERIES	BODY	ENGINE	TRANS	TRIM	DESCRIPTION
23	06504894AA	1				EV0			PLUG, Oil Drain
24	06505566AA	1				EV0			STUD, Oil Filler Housing Mounting

DAKOTA (AN)

SERIES	LINE	BODY	ENGINE	TRANSMISSION
L = Quad Cab L = Regular Cab L = Club Cab	1 = Dakota 2WD 5 = Dakota 4WD	31 = CLUB CAB 2-DR 6.5 FT BOX 61 = REG CAB 6.5 FT BOX 84 = CREW CAB 4-DR W.B.1	EPO = 2.5L 4 Cyl. EHO = 3.9L 6 Cyl. EMO = 5.9L 8 Cyl. EVO = 4.7L Magnum EHC = 3.9L SMPI V6 EML = 5.9L V8 MPI Engine EPE = 2.5L POWER TECH I-4 Cyl. EVA = 4.7L V8 MPI	DDC = TRANSMISSION - 5-SPEED HD MANUAL DG4 = TRANSMISSION-MULTI-SPEED AUTO, 45RFE DGK = TRANSMISSION - 4-SPD. AUTOMATIC,42RE DGT = TRANSMISSION - 4-SPD. AUTOMATIC,46RE DGO = AUTO. TRANS.

AR = use ase required - = Non illustrrated part

Manifold, Intake and Exhaust
Figure 4.7L-810

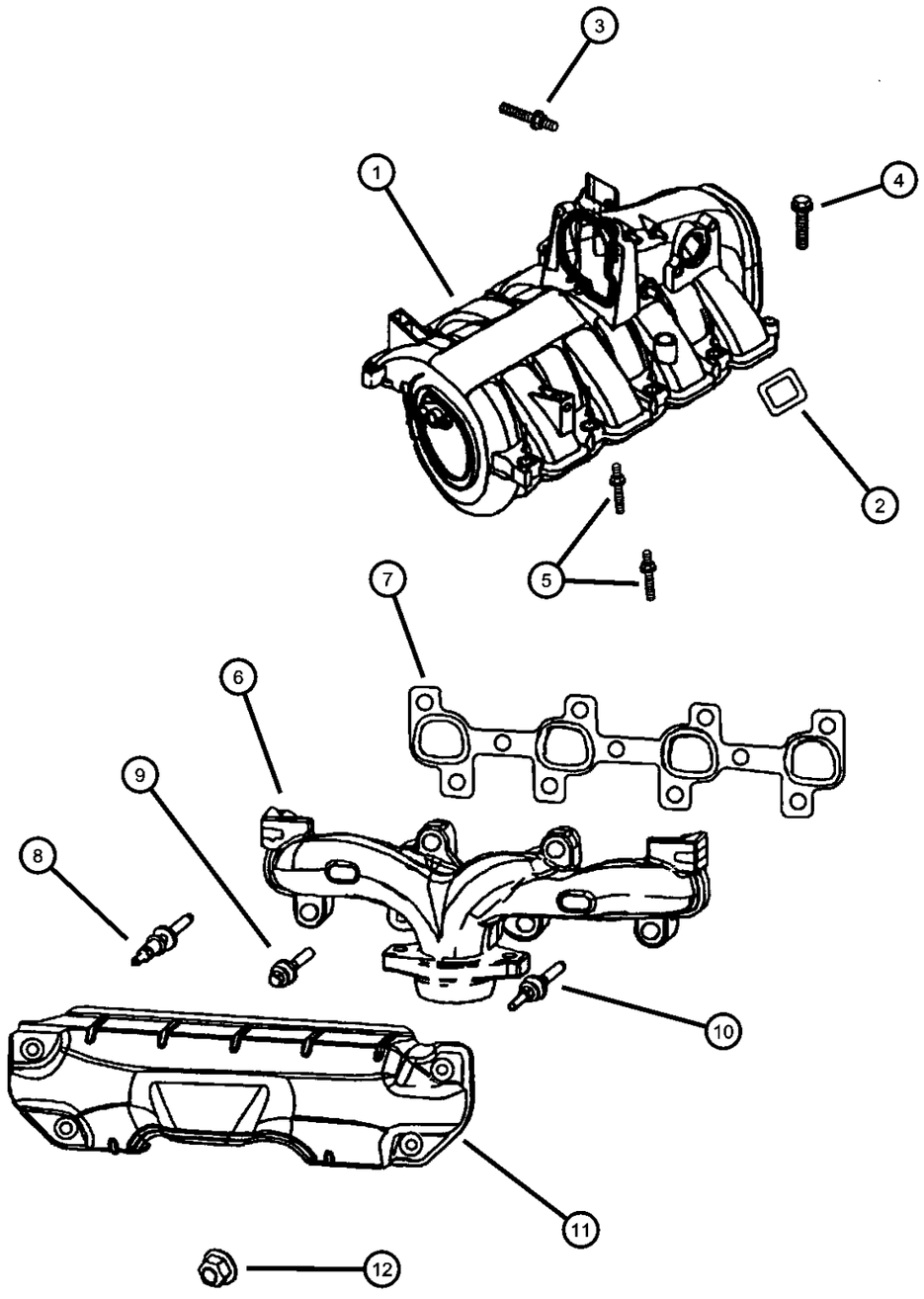

ITEM	PART NUMBER	QTY	LINE	SERIES	BODY	ENGINE	TRANS	TRIM	DESCRIPTION
NOTE: EV0=All 4.7L Engines									
1	53030951AB	1				EV0			MANIFOLD, Intake
2	53010310	8				EV0			SEAL, Intake Manifold
3	06505498AA	1				EV0			STUD
4	06505499AA	2				EV0			SCREW
5	06505500AA	8				EV0			STUD
6									MANIFOLD, Exhaust
	53030808	1				EV0			Right
	53030809	1				EV0			Left
7									GASKET, Exhaust Manifold
	53030812	1				EV0			Right
	53030813	1				EV0			Left
8	06505257AA	4				EV0			STUD
9	06504340	8				EV0			SCREW AND WASHER, Hex
10	06504331	4				EV0			STUD
11									SHIELD, Exhaust Manifold
	53030814	1				EV0			Right
	53031706AA	1				EV0			Left
12	06505316AA	8				EV0			NUT

DAKOTA (AN)

SERIES	LINE	BODY	ENGINE	TRANSMISSION
L = Quad Cab	1 = Dakota 2WD	31 = CLUB CAB 2-DR 6.5 FT BOX	EPO = 2.5L 4 Cyl.	DDC = TRANSMISSION - 5-SPEED HD MANUAL
L = Regular Cab	5 = Dakota 4WD	61 = REG CAB 6.5 FT BOX	EHO = 3.9L 6 Cyl.	DG4 = TRANSMISSION-MULTI-SPEED AUTO, 45RFE
L = Club Cab		84 = CREW CAB 4-DR W.B.1	EMO = 5.9L 8 Cyl.	DGK = TRANSMISSION - 4-SPD. AUTOMATIC,42RE
			EVO = 4.7L Magnum	DGT = TRANSMISSION - 4-SPD. AUTOMATIC,46RE
			EHC = 3.9L SMPI V6	DGO = AUTO. TRANS.
			EML = 5.9L V8 MPI Engine	
			EPE = 2.5L POWER TECH I-4 Cyl.	
			EVA = 4.7L V8 MPI	

Crankcase Ventilation 4.7l (EVA)
Figure 4.7L-910

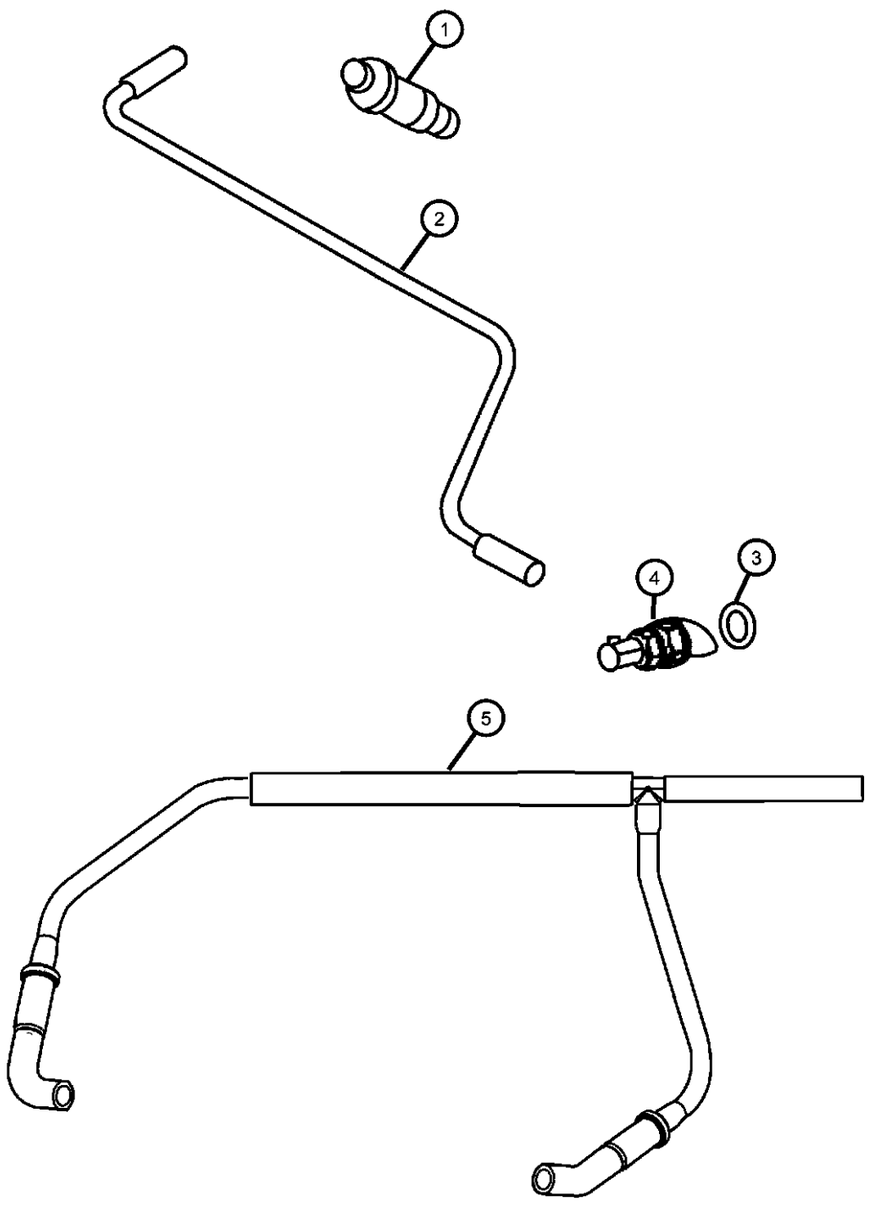

ITEM	PART NUMBER	QTY	LINE	SERIES	BODY	ENGINE	TRANS	TRIM	DESCRIPTION
1	53030850	2				EV0			BREATHER, Crankcase
2	53008675AD	1				EH0, EM0			TUBE, PCV Valve
3	53031711AA	1				EV0			O RING
4	53031777AA	1				EV0			VALVE, Crankcase Vent
5	53032090AA	1				EV0			HARNESS

DAKOTA (AN)

SERIES	LINE	BODY	ENGINE	TRANSMISSION
L = Quad Cab L = Regular Cab L = Club Cab	1 = Dakota 2WD 5 = Dakota 4WD	31 = CLUB CAB 2-DR 6.5 FT BOX 61 = REG CAB 6.5 FT BOX 84 = CREW CAB 4-DR W.B.1	EPO = 2.5L 4 Cyl. EHO = 3.9L 6 Cyl. EMO = 5.9L 8 Cyl. EVO = 4.7L Magnum EHC = 3.9L SMPI V6 EML = 5.9L V8 MPI Engine EPE = 2.5L POWER TECH I-4 Cyl. EVA = 4.7L V8 MPI	DDC = TRANSMISSION - 5-SPEED HD MANUAL DG4 = TRANSMISSION-MULTI-SPEED AUTO, 45RFE DGK = TRANSMISSION - 4-SPD. AUTOMATIC,42RE DGT = TRANSMISSION - 4-SPD. AUTOMATIC,46RE DGO = AUTO. TRANS.

Group - 5.9L

Engine 5.9L Eight Cylinder

5.9L-200
Cylinder Head

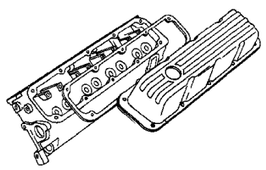

5.9L-300
Cylinder Block

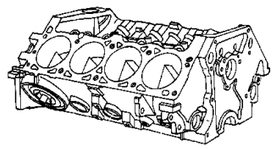

5.9L-400
Crankshaft, Pistion and Torque Converter

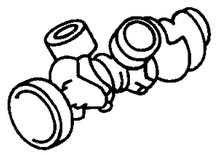

5.9L-500
Camshafts & Valves

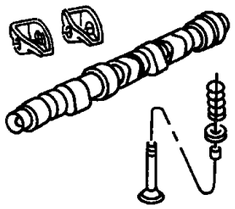

5.9L-600
Timing Belt and Cover

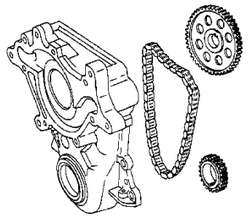

5.9L-700
Engine Oiling

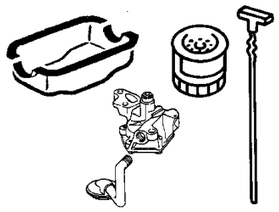

5.9L-800
Manifolds

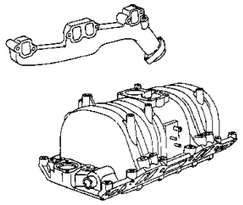

5.9L-900
Crankcase Ventilation

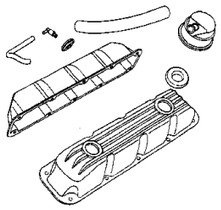

Group - 5.9L Engine 5.9L Eight Cylinder

Illustration Title — Group-Fig. No.

Cylinder Head
Cylinder Head ..... Fig. 5.9L - 210

Cylinder Block
Cylinder Block ..... Fig. 5.9L - 310

Crankshaft, Pistion and Torque Converter
Crankshaft, Piston and Torque Converter ..... Fig. 5.9L - 410

Camshafts & Valves
Camshaft and Valves ..... Fig. 5.9L - 510

Timing Belt and Cover
Timing Belt and Cover ..... Fig. 5.9L - 610

Engine Oiling
Engine Oiling ..... Fig. 5.9L - 710

Manifolds
Manifold, Intake and Exhaust ..... Fig. 5.9L - 810

Crankcase Ventilation
Crankcase Ventilation ..... Fig. 5.9L - 910

Cylinder Head
Figure 5.9L-210

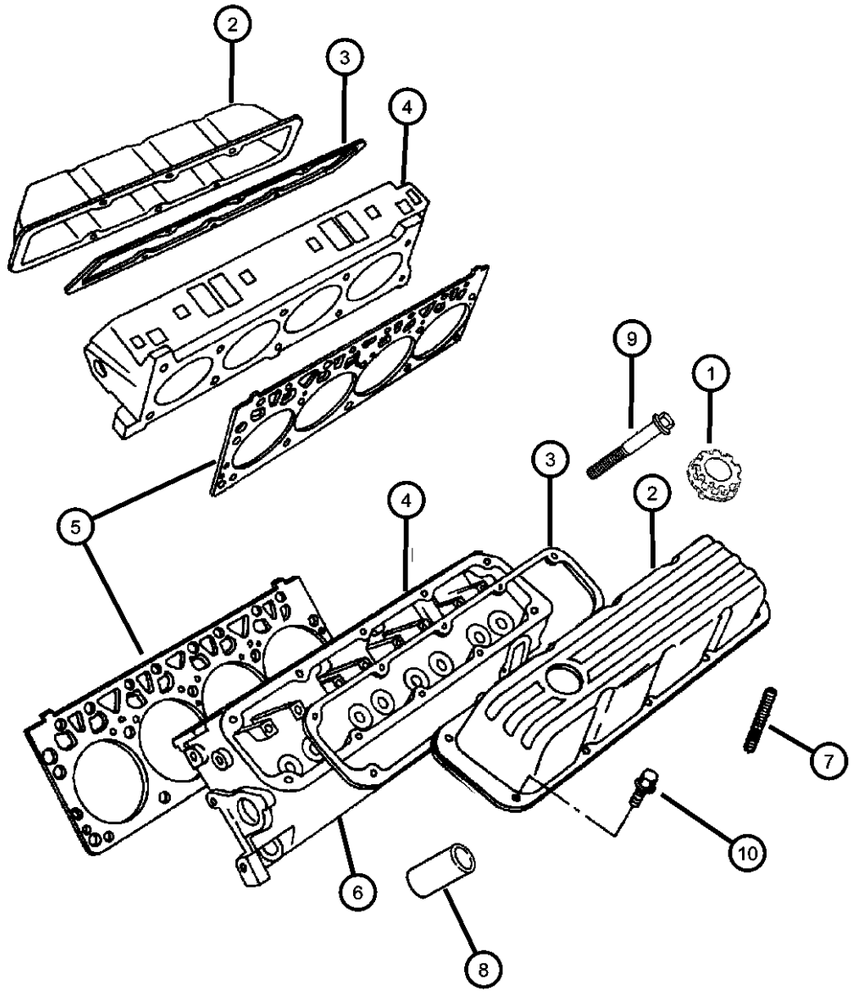

ITEM	PART NUMBER	QTY	LINE	SERIES	BODY	ENGINE	TRANS	TRIM	DESCRIPTION
NOTE: Packages Do Not Contain Gaskets For All Required Sealing. R.T.V. Sealer And Gasket Eliminator Must Also Be Used.									
1	04777536	1				EH0, EM0			CAP, Oil Filler
2									COVER, Cylinder Head
	53020340AC	1				EM0			w/Oil Fill Hole
	53020612AC	1				EM0			w/Out Oil Fill Hole
3	53006695	2				EM0			GASKET, Valve Cover
4	53021137	2				EM0			HEAD, Cylinder
	R5852480								Mopar Reman For Corporate Warranty Use
5	53021098	2				EM0			GASKET, Cylinder Head
6									PLUG, Core, 1.25 Diameter
	04556020	4				EH0			
		4				EM0			
7	06035878AA	14				EM0			STUD
8	53020419	8				EM0			SHIELD, Heat
9									BOLT, Cylinder Head
	06034690	10				EM0			.50-13x2.00
	06034691	10				EM0			.50-13x4.50
10	06035877AA	7				EM0			SCREW AND WASHER, Hex Head, .25-20x.875
-11	04897386AC	1				EM0			GASKET PACKAGE, Engine Upper

DAKOTA (AN)

SERIES	LINE	BODY	ENGINE	TRANSMISSION
L = Quad Cab	1 = Dakota 2WD	31 = CLUB CAB 2-DR 6.5 FT BOX	EPO = 2.5L 4 Cyl.	DDC = TRANSMISSION - 5-SPEED HD MANUAL
L = Regular Cab	5 = Dakota 4WD	61 = REG CAB 6.5 FT BOX	EHO = 3.9L 6 Cyl.	DG4 = TRANSMISSION-MULTI-SPEED AUTO, 45RFE
L = Club Cab		84 = CREW CAB 4-DR W.B.1	EMO = 5.9L 8 Cyl.	DGK = TRANSMISSION - 4-SPD. AUTOMATIC,42RE
			EVO = 4.7L Magnum	DGT = TRANSMISSION - 4-SPD. AUTOMATIC,46RE
			EHC = 3.9L SMPI V6	DGO = AUTO. TRANS.
			EML = 5.9L V8 MPI Engine	
			EPE = 2.5L POWER TECH I-4 Cyl.	
			EVA = 4.7L V8 MPI	

Cylinder Block
Figure 5.9L-310

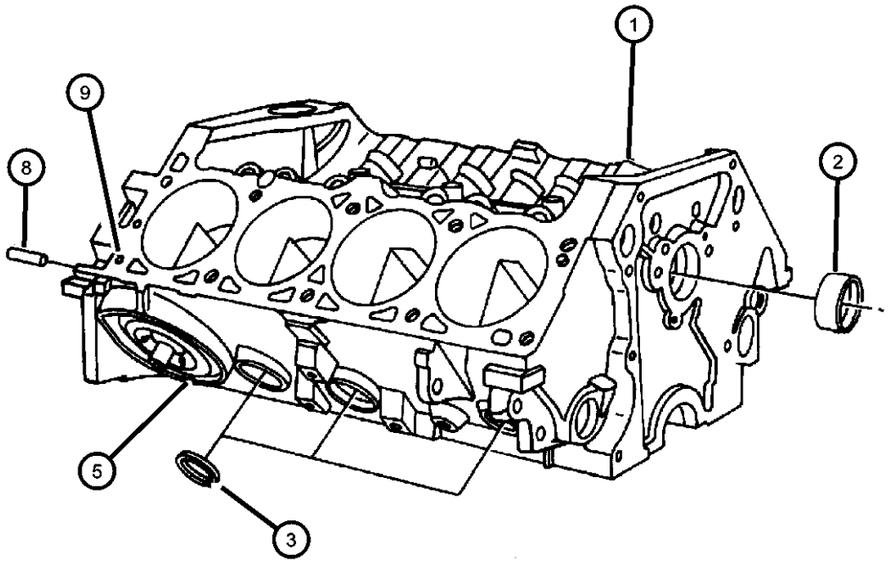

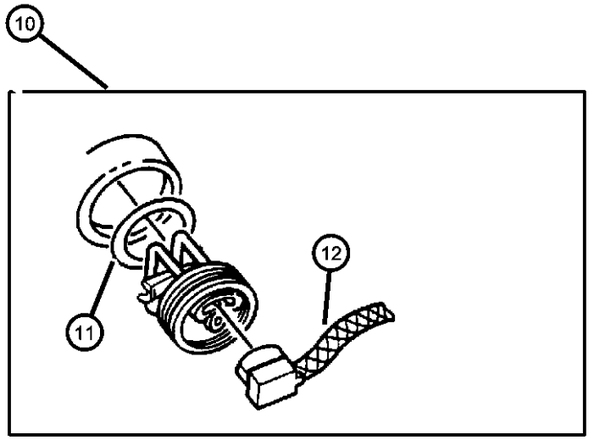

ITEM	PART NUMBER	QTY	LINE	SERIES	BODY	ENGINE	TRANS	TRIM	DESCRIPTION
NOTE: Packages Do Not Contain Gaskets For All Required Sealing. R.T.V. Sealer And Gasket Eliminator Must Also Be Used.									
GASKET PACKAGE, Engine Lower - 04746001									
1	04741528AB	1				EM0			BLOCK, Short, Contains: Crank, Rods, Pistons, Rings, Cam Bearings
	04761839AB								Mopar 10W30 Engine Oil Quart
	04761845AC								Mopar 10W30 Engine Oil Gallon
	R2859488								Mopar Reman 5.9L Long Block (EML)
2	03830603	1				EM0			BEARING, Camshaft, #1
3	04556020	2				EM0			PLUG, Core, 1.25 Diameter
-4	04556022	8				EM0			PLUG, Core, 1.625 Diameter
5	03751818	2				EM0			PLUG, Pipe
-6	03751818	2							PLUG, Cylinder Block, 3/8NPT, (NOT SERVICED)
-7	53009518	1				EM0			PLUG, Cylinder Block Oil Hole
8	01122532	2				EM0			DOWEL, Block To Clutch Housing
9	00141215	4				EM0			DOWEL, .312 x .500
10	04798276	1				EH0, EM0			HEATER PACKAGE, Engine Block
11									O RING, Engine Block Heater
	06501445	AR				EH0, EM0, EV0			M34.67 4.36
	06501446	1				EH0, EM0			m34.65 3.60
12	56020234	1							CORD, Engine Block Heater
-13	04746001	1				EM0			GASKET PACKAGE, Engine

DAKOTA (AN)

SERIES	LINE	BODY	ENGINE	TRANSMISSION
L = Quad Cab L = Regular Cab L = Club Cab	1 = Dakota 2WD 5 = Dakota 4WD	31 = CLUB CAB 2-DR 6.5 FT BOX 61 = REG CAB 6.5 FT BOX 84 = CREW CAB 4-DR W.B.1	EPO = 2.5L 4 Cyl. EHO = 3.9L 6 Cyl. EMO = 5.9L 8 Cyl. EVO = 4.7L Magnum EHC = 3.9L SMPI V6 EML = 5.9L V8 MPI Engine EPE = 2.5L POWER TECH I-4 Cyl. EVA = 4.7L V8 MPI	DDC = TRANSMISSION - 5-SPEED HD MANUAL DG4 = TRANSMISSION-MULTI-SPEED AUTO, 45RFE DGK = TRANSMISSION - 4-SPD. AUTOMATIC,42RE DGT = TRANSMISSION - 4-SPD. AUTOMATIC,46RE DGO = AUTO. TRANS.

AR = use ase required - = Non illustrrated part

Crankshaft, Piston and Torque Converter
Figure 5.9L-410

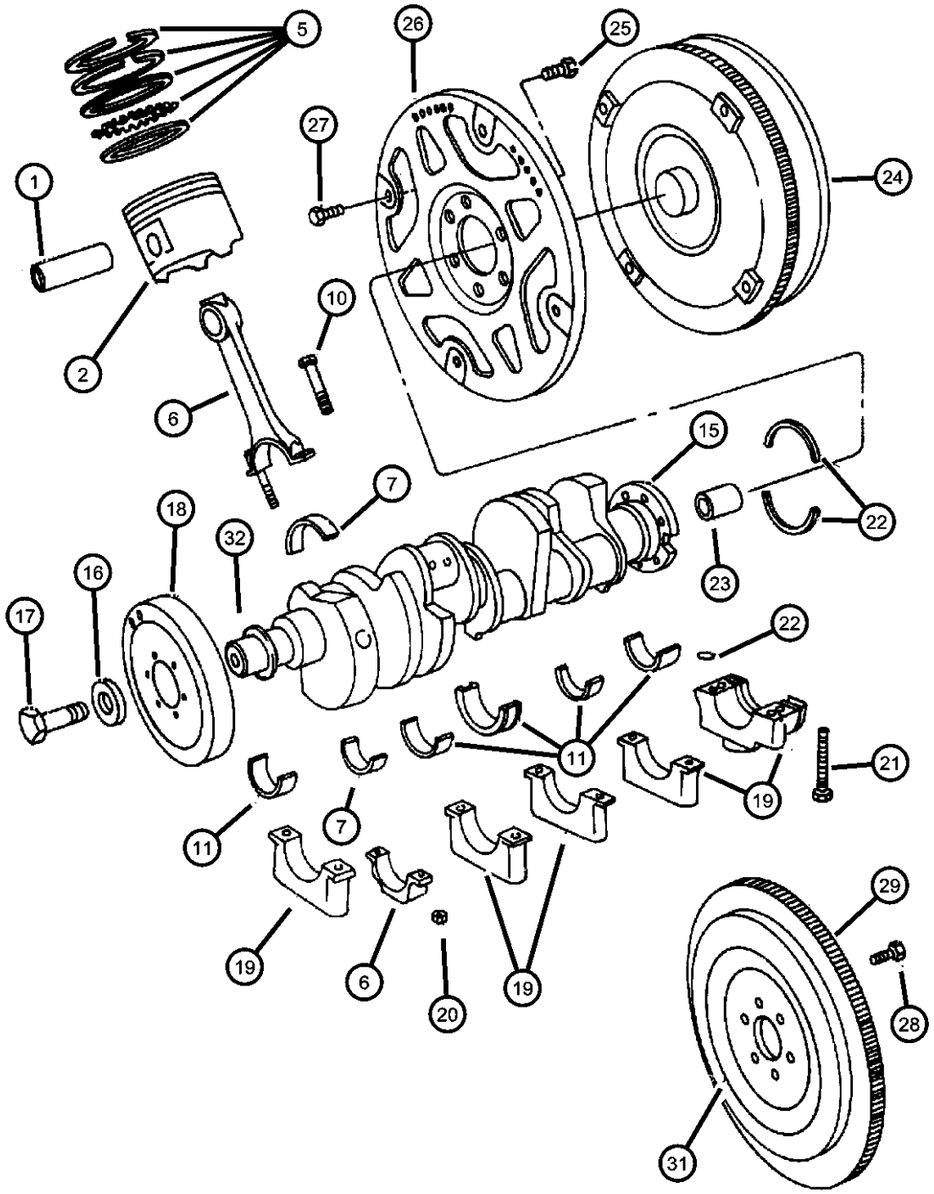

ITEM	PART NUMBER	QTY	LINE	SERIES	BODY	ENGINE	TRANS	TRIM	DESCRIPTION
Note; EHO= All 3.9 Engines, EMO= All 5.9 Engines DGO= All Automatic Transmissions									
1	04746001	1							PIN, Piston, Serviced in Piston Assembly, (NOT SERVICED)
2									PISTON PIN AND ROD, B-Size
	04778871AC	4				EM0			# 1,3,5,7.
	04778872AC	4				EM0			# 2,4,6,8.
-3									PISTON PIN AND ROD, C-Size
	04778873AC	4				EM0			# 1,3,5,7.
	04778874AC	4				EM0			# 2.4,6,8.
-4									PISTON PIN AND ROD, D-Size
	04778875AC	4				EM0			# 1,3,5,7.
	04778876AC	4				EM0			# 2,4,6,8.
5	04740259	4				EM0			RING, Piston
6	04740259	4							ROD, Connecting, Serviced in Piston Assembly, (NOT SERVICED)
7	02421305	4				EM0			BEARING, Connecting Rod, STD.
-8	02421305	4							BEARING, Connecting Rod, .001" U/S, (NOT REQUIRED)
-9	02421305	4							BEARING, Connecting Rod, .010" U/S, (NOT REQUIRED)
10	06033441	8				EM0			BOLT, Connecting Rod
11									BEARING PACKAGE, Crankshaft, Standard Size
	03780100	1				EM0			#5
	04026487	3				EM0			#1,2,4
	04713030	1				EM0			#3
-12	04713030	1							BEARING PACKAGE, Crankshaft, .001 Undersize, (NOT REQUIRED),
-13	04713030	1							BEARING PACKAGE, Crankshaft, .010 Undersize, (NOT REQUIRED)
-14	04713030	1							BEARING, Crankshaft Thrust, .010" U/S, (NOT REQUIRED)
15	04790759AB	1				EM0	DG0		CRANKSHAFT AND KEY
	R4790759AB								Mopar Reman Crankshaft Kit (include Main & Rod Bearings)

DAKOTA (AN)

SERIES	LINE	BODY	ENGINE	TRANSMISSION
L = Quad Cab L = Regular Cab L = Club Cab	1 = Dakota 2WD 5 = Dakota 4WD	31 = CLUB CAB 2-DR 6.5 FT BOX 61 = REG CAB 6.5 FT BOX 84 = CREW CAB 4-DR W.B.1	EPO = 2.5L 4 Cyl. EHO = 3.9L 6 Cyl. EMO = 5.9L 8 Cyl. EVO = 4.7L Magnum EHC = 3.9L SMPI V6 EML = 5.9L V8 MPI Engine EPE = 2.5L POWER TECH I-4 Cyl. EVA = 4.7L V8 MPI	DDC = TRANSMISSION - 5-SPEED HD MANUAL DG4 = TRANSMISSION-MULTI-SPEED AUTO, 45RFE DGK = TRANSMISSION - 4-SPD. AUTOMATIC,42RE DGT = TRANSMISSION - 4-SPD. AUTOMATIC,46RE DGO = AUTO. TRANS.

Crankshaft, Piston and Torque Converter
Figure 5.9L-410

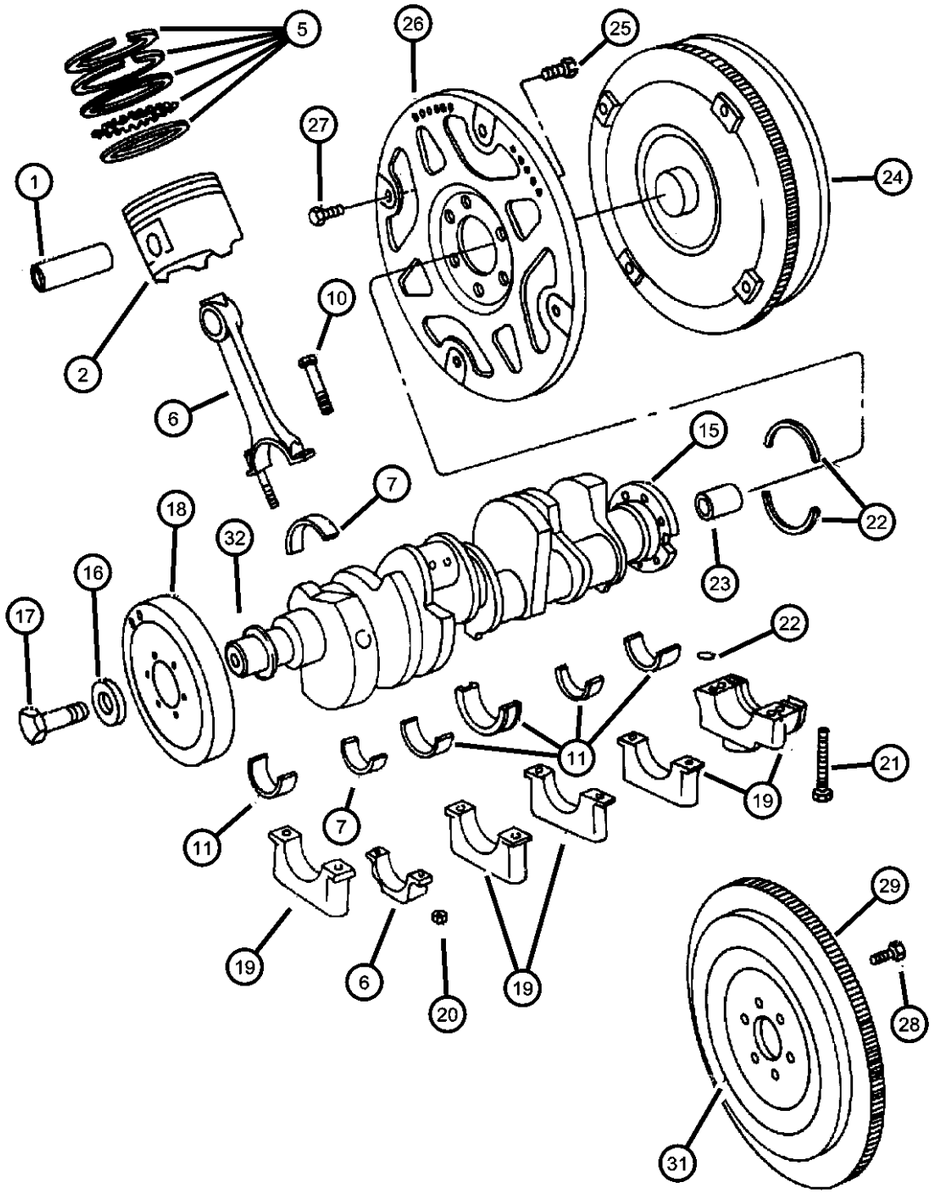

ITEM	PART NUMBER	QTY	LINE	SERIES	BODY	ENGINE	TRANS	TRIM	DESCRIPTION
16	06036207AA	1				EH0, EM0			SCREW AND WASHER
17	01949424	6				EH0, EM0	DG0		SCREW, Hex Head Header Point, .75-16x2.25
18	53020182	1				EM0			DAMPER, Crankshaft
19	53020182	1							CAP, Serviced in Block, (NOT SERVICED)
20	06032296	8				EM0			NUT, Hex, .375-24
21	06027264	10				EM0			SCREW, Socket Hex Head, .50-13x3.25
22	04798216AB	1				EM0			SEAL PACKAGE, Crankshaft
23	04798216AB	1							BEARING, Pilot, (NOT REQUIRED)
24	04736591	1				EM0	DG0		TORQUE CONVERTER
	R4736591								Mopar Remanufactured Part
25	01949424	6				EH0, EM0	DG0		SCREW, Hex Head Header Point, .75-16x2.25
26	04863841	1				EM0	DG0		PLATE, Torque Converter Drive
27	01949765	4					DG0		SCREW, Hex Head Header Point, .312-24x.44
28	01949765	4							SCREW, Hex Head Locking, 18x1.00, (NOT REQUIRED)
29	01949765	4							GEAR, Flywheel Ring, (NOT REQUIRED)
-30	03515203	1				EM0	DG0		GEAR, Ring
31	03515203	1							FLYWHEEL, (NOT REQUIRED)
32	06035948AA	1				EH0, EM0			WASHER, Sealing

DAKOTA (AN)

SERIES	LINE	BODY	ENGINE	TRANSMISSION
L = Quad Cab L = Regular Cab L = Club Cab	1 = Dakota 2WD 5 = Dakota 4WD	31 = CLUB CAB 2-DR 6.5 FT BOX 61 = REG CAB 6.5 FT BOX 84 = CREW CAB 4-DR W.B.1	EPO = 2.5L 4 Cyl. EHO = 3.9L 6 Cyl. EMO = 5.9L 8 Cyl. EVO = 4.7L Magnum EHC = 3.9L SMPI V6 EML = 5.9L V8 MPI Engine EPE = 2.5L POWER TECH I-4 Cyl. EVA = 4.7L V8 MPI	DDC = TRANSMISSION - 5-SPEED HD MANUAL DG4 = TRANSMISSION-MULTI-SPEED AUTO, 45RFE DGK = TRANSMISSION - 4-SPD. AUTOMATIC,42RE DGT = TRANSMISSION - 4-SPD. AUTOMATIC,46RE DGO = AUTO. TRANS.

Camshaft and Valves
Figure 5.9L-510

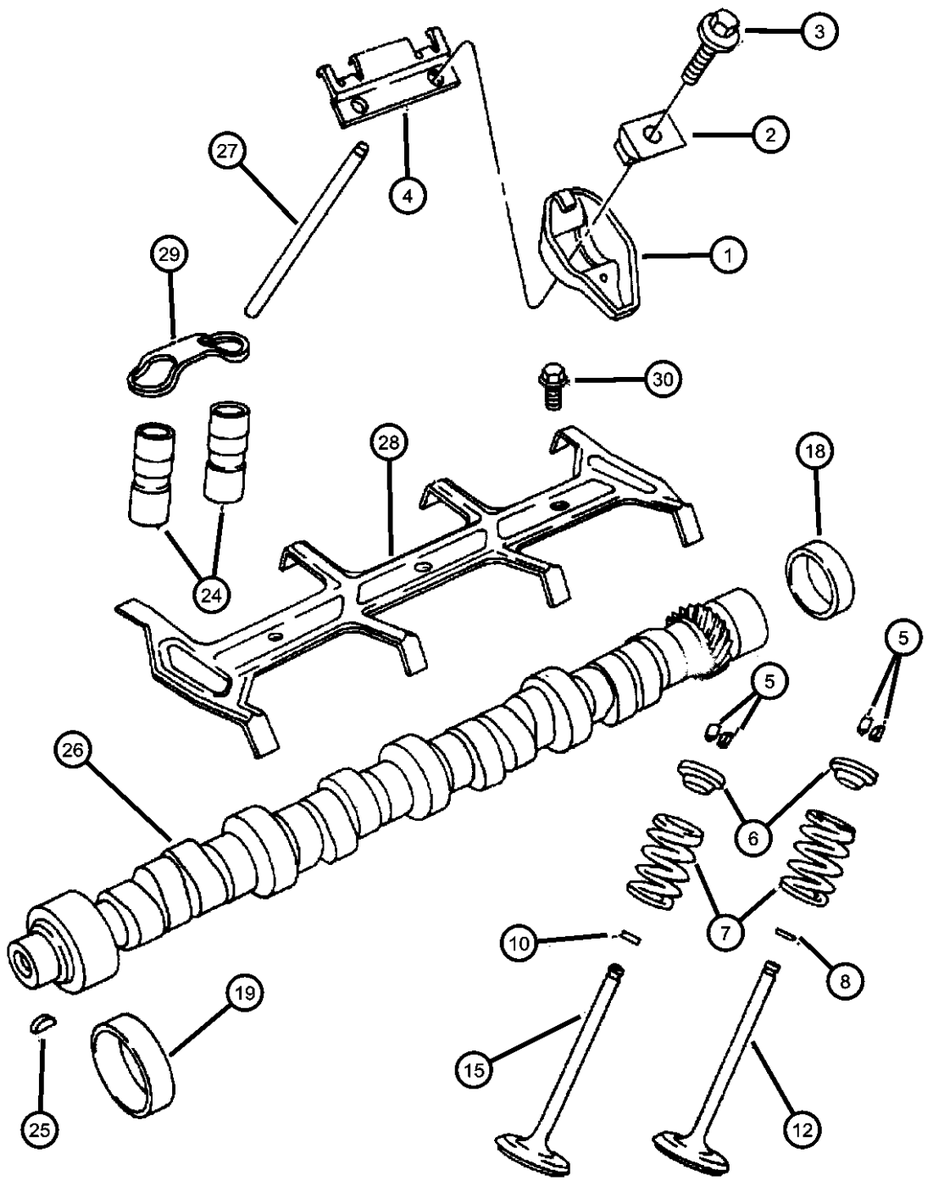

ITEM	PART NUMBER	QTY	LINE	SERIES	BODY	ENGINE	TRANS	TRIM	DESCRIPTION
Note; EPO= All 2.5 Engines, EHO= All 3.9 Engines, EMO= All 5.9 Engines									
1	53008282	16				EM0			ROCKER ARM, Valve
2	53008283	16				EM0			PIVOT, Rocker Arm
3	06036154AA	16				EM0			BOLT, Hex Flange Head, .312-18x1.72
4	53008633	8				EM0			RETAINER, Rocker Arm Pivot
5	33003521	32				EM0			LOCK, Valve Spring Retainer
6	33004626	16				EM0			RETAINER, Valve Spring
7	53021056	16				EM0			SPRING, Valve
8	53009886	8				EM0			SEAL, Valve Guide
-9	53009886	8							SEAL, Valve Guide, .015" Oversize, (NOT REQUIRED)
10	53009887	8				EM0			SEAL, Valve Guide
-11	53009887	8							SEAL, Valve Guide, .015" Oversize, (NOT REQUIRED)
12	53006723	8				EM0			VALVE, Intake, Standard
-13	53006723	8							VALVE, Intake, .003" O/S, (NOT REQUIRED)
-14	53006723	8							VALVE, Intake, .015" O/S, (NOT REQUIRED)
15	53006724	8				EM0			VALVE, Exhaust, Standard
-16	53006724	8							VALVE, Exhaust, .003" O/S, (NOT REQUIRED)
-17	53006724	8							VALVE, Exhaust, .015" O/S, (NOT REQUIRED)
18	02863071	1				EM0			PLUG, Camshaft
19	03830603	1				EM0			BEARING, Camshaft, #1
-20	04179776	1				EM0			BEARING, Camshaft, #2
-21	04179777	1				EM0			BEARING, Camshaft, #3
-22	04179778	1				EM0			BEARING, Camshaft, #3 or #4
-23	01632526	1				EM0			BEARING, Camshaft, #4 or #5
24	04713439	16				EM0			TAPPET PACKAGE, Valve
25	00431787	1				EH0, EM0			KEY, Camshaft Sprocket
26	53021101	1				EM0			CAMSHAFT, Engine
27	53006722	16				EM0			PUSH ROD, Valve

DAKOTA (AN)

SERIES	LINE	BODY	ENGINE	TRANSMISSION
L = Quad Cab L = Regular Cab L = Club Cab	1 = Dakota 2WD 5 = Dakota 4WD	31 = CLUB CAB 2-DR 6.5 FT BOX 61 = REG CAB 6.5 FT BOX 84 = CREW CAB 4-DR W.B.1	EPO = 2.5L 4 Cyl. EHO = 3.9L 6 Cyl. EMO = 5.9L 8 Cyl. EVO = 4.7L Magnum EHC = 3.9L SMPI V6 EML = 5.9L V8 MPI Engine EPE = 2.5L POWER TECH I-4 Cyl. EVA = 4.7L V8 MPI	DDC = TRANSMISSION - 5-SPEED HD MANUAL DG4 = TRANSMISSION-MULTI-SPEED AUTO, 45RFE DGK = TRANSMISSION - 4-SPD. AUTOMATIC,42RE DGT = TRANSMISSION - 4-SPD. AUTOMATIC,46RE DGO = AUTO. TRANS.

Camshaft and Valves
Figure 5.9L-510

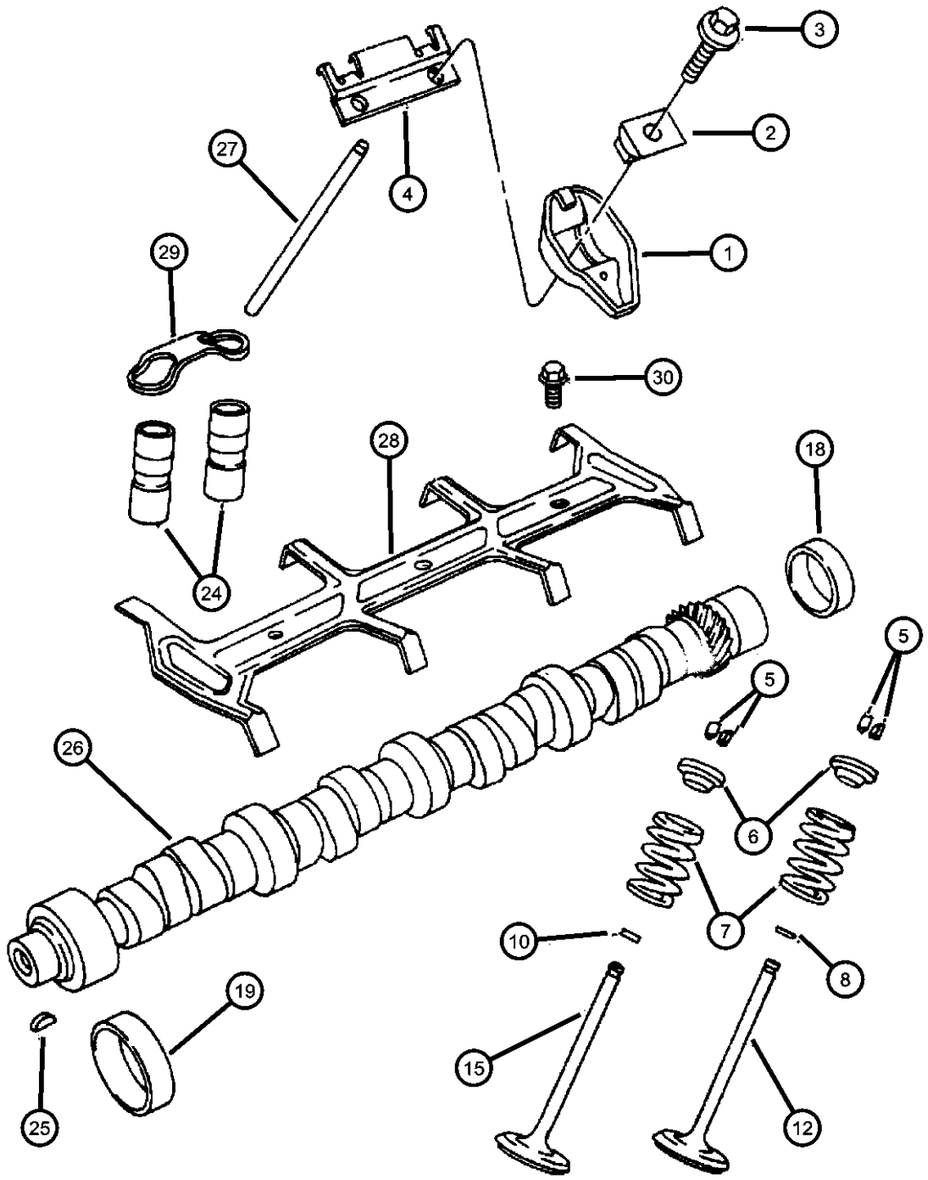

ITEM	PART NUMBER	QTY	LINE	SERIES	BODY	ENGINE	TRANS	TRIM	DESCRIPTION
28	04323207	1				EM0			RETAINER, Tappet Yoke Aligning
29	04483045	8				EM0			YOKE, Tappet Aligning
30	06034483	3				EP0			SCREW, Hex Head Coned, .312-18x.875, Also Fits EMO Engines

DAKOTA (AN)

SERIES	LINE	BODY	ENGINE	TRANSMISSION
L = Quad Cab L = Regular Cab L = Club Cab	1 = Dakota 2WD 5 = Dakota 4WD	31 = CLUB CAB 2-DR 6.5 FT BOX 61 = REG CAB 6.5 FT BOX 84 = CREW CAB 4-DR W.B.1	EPO = 2.5L 4 Cyl. EHO = 3.9L 6 Cyl. EMO = 5.9L 8 Cyl. EVO = 4.7L Magnum EHC = 3.9L SMPI V6 EML = 5.9L V8 MPI Engine EPE = 2.5L POWER TECH I-4 Cyl. EVA = 4.7L V8 MPI	DDC = TRANSMISSION - 5-SPEED HD MANUAL DG4 = TRANSMISSION-MULTI-SPEED AUTO, 45RFE DGK = TRANSMISSION - 4-SPD. AUTOMATIC,42RE DGT = TRANSMISSION - 4-SPD. AUTOMATIC,46RE DGO = AUTO. TRANS.

Timing Belt and Cover
Figure 5.9L-610

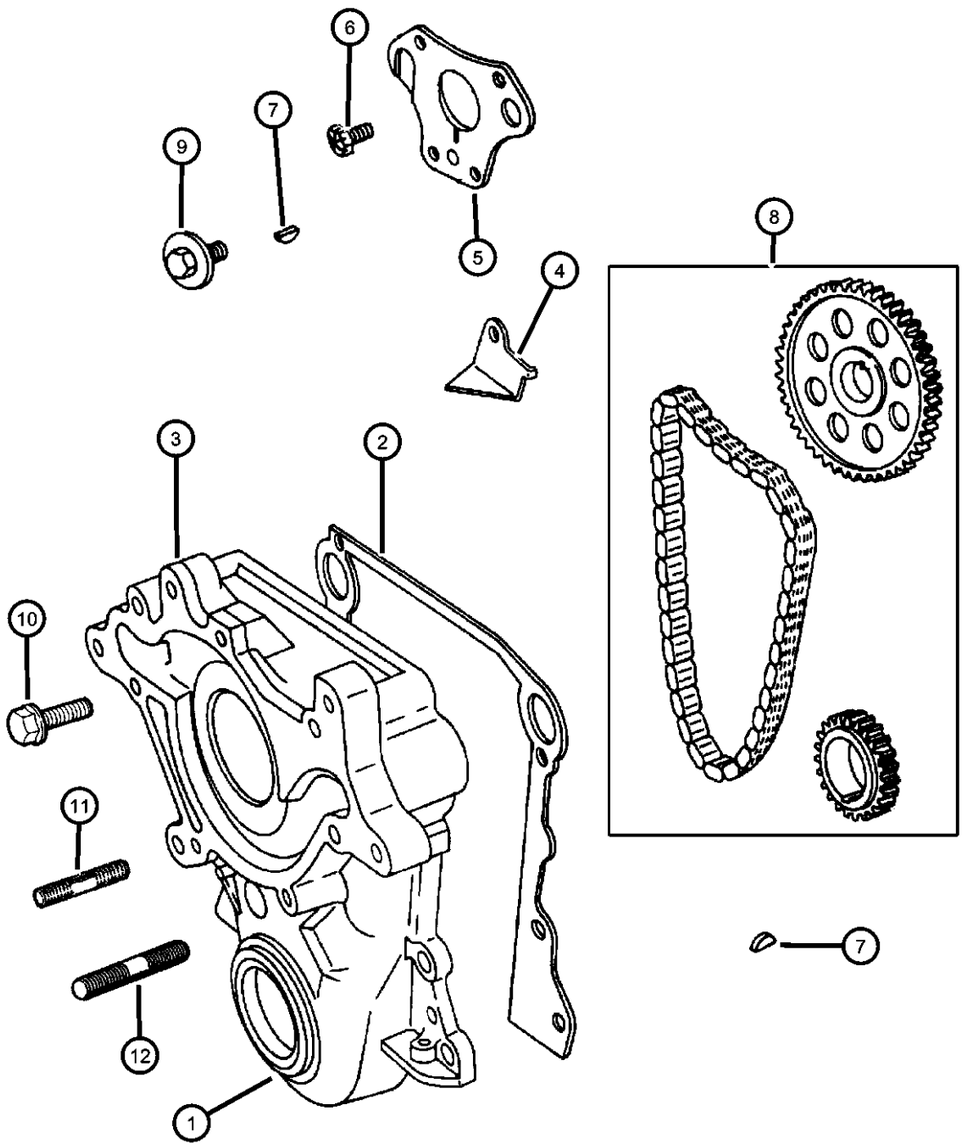

ITEM	PART NUMBER	QTY	LINE	SERIES	BODY	ENGINE	TRANS	TRIM	DESCRIPTION
Note; EHO= All 3.9 Engines, EMO= All 5.9 Engines									
1	04897297AA	1				EM0			SEAL PACKAGE, Timing Case Cover
2	53021057	1				EH0, EM0			GASKET, Chain Case Cover
3	04897723AA	1				EM0			COVER PACKAGE, Engine Timing
4	03671649	1				EM0			TAB, Timing Chain Oil
5	04315764	1				EM0			PLATE, Camshaft Thrust
6	06034483	3				EP0			SCREW, Hex Head Coned, .312-18x.875
7	06029411	1				EM0	DG0		KEY, Crankshaft Sprocket
8	83507095	1				EM0			CHAIN PACKAGE, Timing
9	06034321	1				EH0, EM0			SCREW AND WASHER, Hex Head, Coned, Header, .437-14x1.375
10	06034479	1				EH0, EM0			BOLT, Hex Head, .375-16x2.25
11	06034452	1				EH0, EM0			STUD, .375-16x.375-16x2.38
12	06034453	2				EH0, EM0			STUD, .375-16x.375-16x1.63

DAKOTA (AN)

SERIES	LINE	BODY	ENGINE	TRANSMISSION
L = Quad Cab L = Regular Cab L = Club Cab	1 = Dakota 2WD 5 = Dakota 4WD	31 = CLUB CAB 2-DR 6.5 FT BOX 61 = REG CAB 6.5 FT BOX 84 = CREW CAB 4-DR W.B.1	EPO = 2.5L 4 Cyl. EHO = 3.9L 6 Cyl. EMO = 5.9L 8 Cyl. EVO = 4.7L Magnum EHC = 3.9L SMPI V6 EML = 5.9L V8 MPI Engine EPE = 2.5L POWER TECH I-4 Cyl. EVA = 4.7L V8 MPI	DDC = TRANSMISSION - 5-SPEED HD MANUAL DG4 = TRANSMISSION-MULTI-SPEED AUTO, 45RFE DGK = TRANSMISSION - 4-SPD. AUTOMATIC,42RE DGT = TRANSMISSION - 4-SPD. AUTOMATIC,46RE DGO = AUTO. TRANS.

Engine Oiling
Figure 5.9L-710

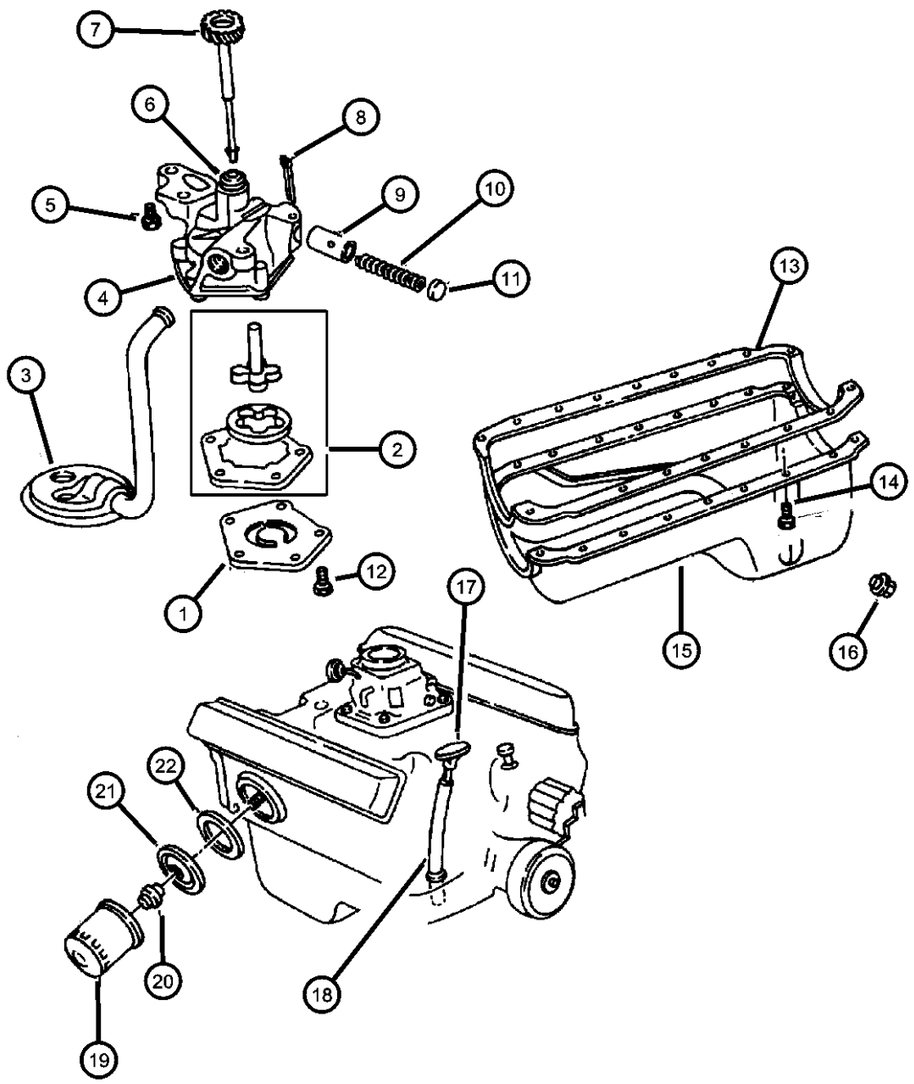

ITEM	PART NUMBER	QTY	LINE	SERIES	BODY	ENGINE	TRANS	TRIM	DESCRIPTION
Note; EHO= All 3.9 Engines, EMO= All 5.9 Engines									
1	04071043	1				EM0			COVER, Engine Oil Pump
2	03837648	1				EM0			SHAFT AND ROTOR PACKAGE, Oil Pump
3	04315436	1				EM0			PICKUP, Engine Oil
4	53009295	1				EM0			PUMP, Engine Oil
5	00179842	2				EH0, EM0			SCREW, Hex Head Header Point, .375-16x1.375
6	01737725	1				EM0			BUSHING, Oil Pump and Distibutor
7	53020546	1				EH0, EM0			SHAFT, Oil Pump
8	00108636	1				EM0			PIN, Cotter
9	02843208	1				EM0			PLUNGER, Oil Pressure Relief Valve
10	02402473	1				EM0			SPRING, Oil Pressure Relief Valve
11	02806273	1				EM0			CAP, Oil Pressure Relief Valve
12	00220480	5				EM0			SCREW, Hex Head Header Point, .25-20x.75
13	53008610	1				EM0			GASKET, Oil Pan
14	06034483	3				EP0			SCREW, Hex Head Coned, .312-18x.875
15	53020914AB	1				EM0			PAN, Engine Oil
16	06035417	1				EM0			PLUG, Oil Drain
17									INDICATOR, Engine Oil Level
	53021354AA	1	1			EM0			
	53021355AA	1	5			EM0			
18	53020926	1				EH0, EM0			TUBE, Oil Gauge
19	05281090	1				EH0, EM0			FILTER, Engine Oil
	0FE00292								Canadian Aftermarket Part
	05281090BA								BULK PACK (12)
	77060018								Performance Mobil 1, 15W - 50 Tri-Synthetic Engine Oil- Recommended Fill for 6.1L & 8.3L
	P5007323								Performance Mobil 1, 5W - 30 Tri-Synthetic Engine Oil, Quart
20	53007563	1				EH0, EM0			CONNECTOR, Oil Filter

DAKOTA (AN)

SERIES	LINE	BODY	ENGINE	TRANSMISSION
L = Quad Cab L = Regular Cab L = Club Cab	1 = Dakota 2WD 5 = Dakota 4WD	31 = CLUB CAB 2-DR 6.5 FT BOX 61 = REG CAB 6.5 FT BOX 84 = CREW CAB 4-DR W.B.1	EPO = 2.5L 4 Cyl. EHO = 3.9L 6 Cyl. EMO = 5.9L 8 Cyl. EVO = 4.7L Magnum EHC = 3.9L SMPI V6 EML = 5.9L V8 MPI Engine EPE = 2.5L POWER TECH I-4 Cyl. EVA = 4.7L V8 MPI	DDC = TRANSMISSION - 5-SPEED HD MANUAL DG4 = TRANSMISSION-MULTI-SPEED AUTO, 45RFE DGK = TRANSMISSION - 4-SPD. AUTOMATIC,42RE DGT = TRANSMISSION - 4-SPD. AUTOMATIC,46RE DGO = AUTO. TRANS.

Engine Oiling
Figure 5.9L-710

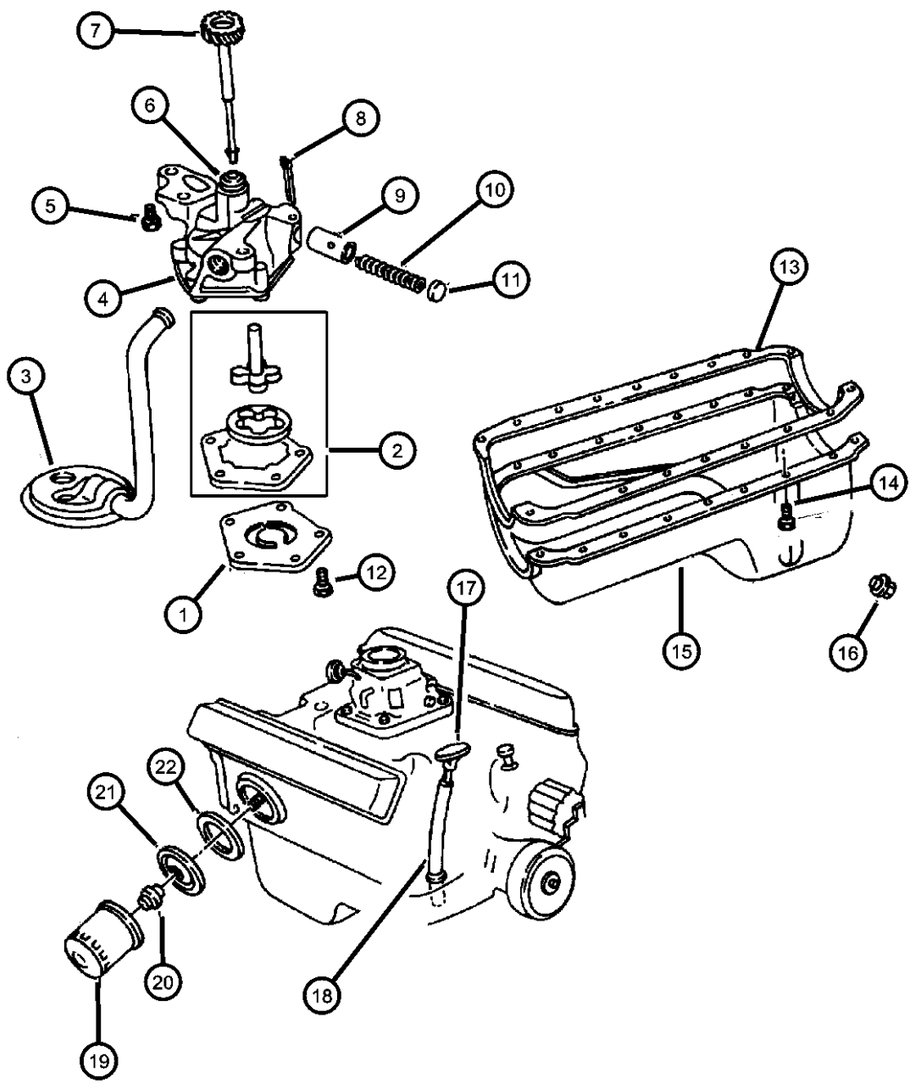

ITEM	PART NUMBER	QTY	LINE	SERIES	BODY	ENGINE	TRANS	TRIM	DESCRIPTION
21	53021053	1				EH0, EM0			PLATE, Oil Filter Adapter
22	53020461	1				EH0, EM0			GASKET, Oil Filter Adapter

DAKOTA (AN)

SERIES	LINE	BODY	ENGINE	TRANSMISSION
L = Quad Cab L = Regular Cab L = Club Cab	1 = Dakota 2WD 5 = Dakota 4WD	31 = CLUB CAB 2-DR 6.5 FT BOX 61 = REG CAB 6.5 FT BOX 84 = CREW CAB 4-DR W.B.1	EPO = 2.5L 4 Cyl. EHO = 3.9L 6 Cyl. EMO = 5.9L 8 Cyl. EVO = 4.7L Magnum EHC = 3.9L SMPI V6 EML = 5.9L V8 MPI Engine EPE = 2.5L POWER TECH I-4 Cyl. EVA = 4.7L V8 MPI	DDC = TRANSMISSION - 5-SPEED HD MANUAL DG4 = TRANSMISSION-MULTI-SPEED AUTO, 45RFE DGK = TRANSMISSION - 4-SPD. AUTOMATIC,42RE DGT = TRANSMISSION - 4-SPD. AUTOMATIC,46RE DGO = AUTO. TRANS.

Manifold, Intake and Exhaust
Figure 5.9L-810

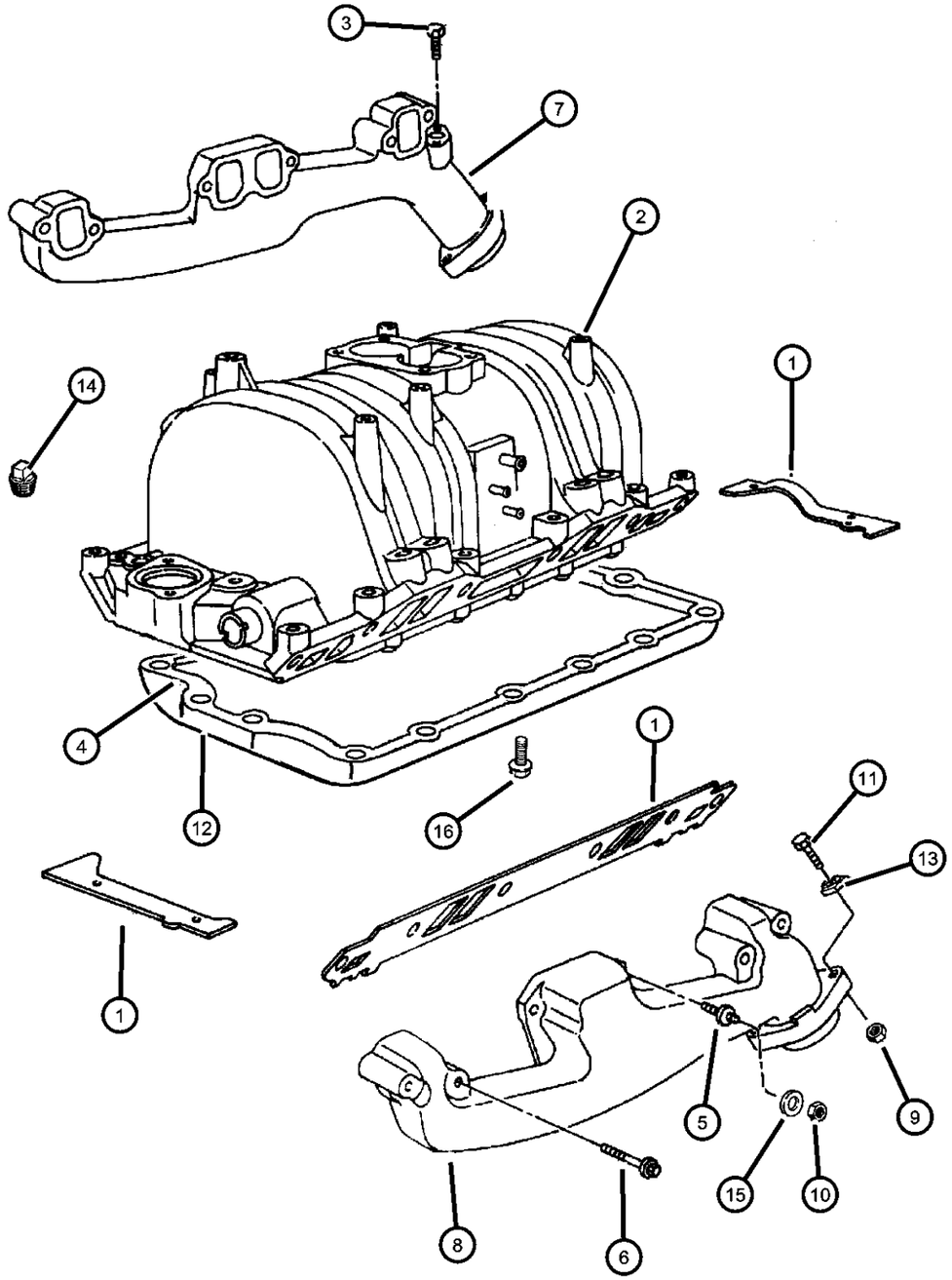

ITEM	PART NUMBER	QTY	LINE	SERIES	BODY	ENGINE	TRANS	TRIM	DESCRIPTION
NOTE: Packages Do Not Contain Gaskets For All Required Sealing. R.T.V. Sealer And Gasket Eliminator Must Also Be Used.									
1	04897383AC	1				EM0			GASKET PACKAGE, Intake Manifold
2	04897490AC	1				EM0			MANIFOLD, Intake
3	06035967AA	12				EH0, EM0			SCREW AND WASHER, Hex Head
4	53006623	1				EM0			GASKET, Intake Manifold Pan
5	06034643	4				EH0, EM0			STUD, .312-18/.312-24x2.25
6	06034806	5				EM0			SCREW AND WASHER, Hex Head, .312-18x3.125
7	53030873	1				EM0			MANIFOLD, Exhaust
8	53010189	1				EM0			MANIFOLD, Exhaust
9	00118615	4				EH0, EM0, EV0			NUT, Hex, .375-16
10	00115729	4				EM0			NUT, Hex, .312 x 24
11	06035375	4				EH0, EM0, EV0			BOLT, Hex Head, .375-16x2.50
12	53006617	1				EM0			PAN, Intake Manifold
13	04004001	4				EH0, EM0, EV0			RETAINER, Exhaust Pipe to Manifold
14	04004001	4							PLUG, Hex Socket, 3/8-18NPT, (NOT SERVICED)
15	53010091	4				EH0, EM0			CLAMP, Exhaust Manifold
16	06034583	15				EM0			SCREW AND WASHER, Hex Head, .25-20x.892

DAKOTA (AN)

SERIES	LINE	BODY	ENGINE	TRANSMISSION
L = Quad Cab L = Regular Cab L = Club Cab	1 = Dakota 2WD 5 = Dakota 4WD	31 = CLUB CAB 2-DR 6.5 FT BOX 61 = REG CAB 6.5 FT BOX 84 = CREW CAB 4-DR W.B.1	EPO = 2.5L 4 Cyl. EHO = 3.9L 6 Cyl. EMO = 5.9L 8 Cyl. EVO = 4.7L Magnum EHC = 3.9L SMPI V6 EML = 5.9L V8 MPI Engine EPE = 2.5L POWER TECH I-4 Cyl. EVA = 4.7L V8 MPI	DDC = TRANSMISSION - 5-SPEED HD MANUAL DG4 = TRANSMISSION-MULTI-SPEED AUTO, 45RFE DGK = TRANSMISSION - 4-SPD. AUTOMATIC,42RE DGT = TRANSMISSION - 4-SPD. AUTOMATIC,46RE DGO = AUTO. TRANS.

AR = use ase required - = Non illustrrated part

Crankcase Ventilation
Figure 5.9L-910

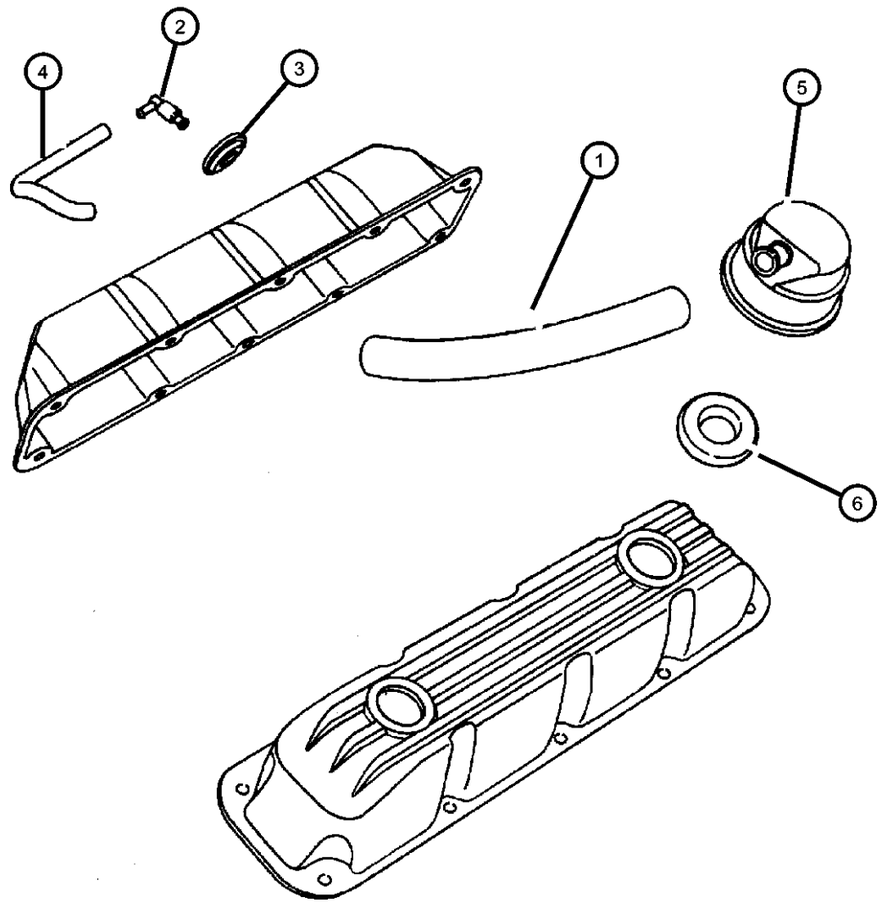

ITEM	PART NUMBER	QTY	LINE	SERIES	BODY	ENGINE	TRANS	TRIM	DESCRIPTION
1	53031136AD	1				EH0, EM0			HOSE, Crankcase Vent
2	53031135	1				EM0			VALVE, Crankcase Vent
3	53030017	1				EH0, EM0			GROMMET, Crankcase Vent
4	53008675AD	1				EH0, EM0			TUBE, PCV Valve
5	53030497	1				EH0, EM0			FITTING, Crankcase Vent Tube
6	02946079	1				EH0, EM0			GROMMET, Crankcase Vent

DAKOTA (AN)

SERIES	LINE	BODY	ENGINE	TRANSMISSION
L = Quad Cab L = Regular Cab L = Club Cab	1 = Dakota 2WD 5 = Dakota 4WD	31 = CLUB CAB 2-DR 6.5 FT BOX 61 = REG CAB 6.5 FT BOX 84 = CREW CAB 4-DR W.B.1	EPO = 2.5L 4 Cyl. EHO = 3.9L 6 Cyl. EMO = 5.9L 8 Cyl. EVO = 4.7L Magnum EHC = 3.9L SMPI V6 EML = 5.9L V8 MPI Engine EPE = 2.5L POWER TECH I-4 Cyl. EVA = 4.7L V8 MPI	DDC = TRANSMISSION - 5-SPEED HD MANUAL DG4 = TRANSMISSION-MULTI-SPEED AUTO, 45RFE DGK = TRANSMISSION - 4-SPD. AUTOMATIC,42RE DGT = TRANSMISSION - 4-SPD. AUTOMATIC,46RE DGO = AUTO. TRANS.

Group - 11

Exhaust

011-100 Exhaust System 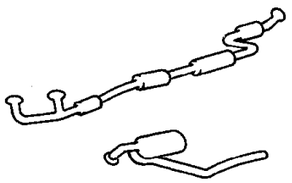	**011-200** Heat Shields 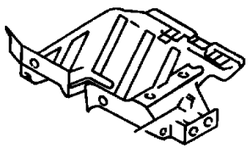		

Group - 11 Exhaust

Illustration Title — Group-Fig. No.

Exhaust System

Exhaust System ..... Fig. 11 - 110
Exhaust System ..... Fig. 11 - 120

Heat Shields

Heat Shields ..... Fig. 11 - 210

Exhaust System
Figure 11-110

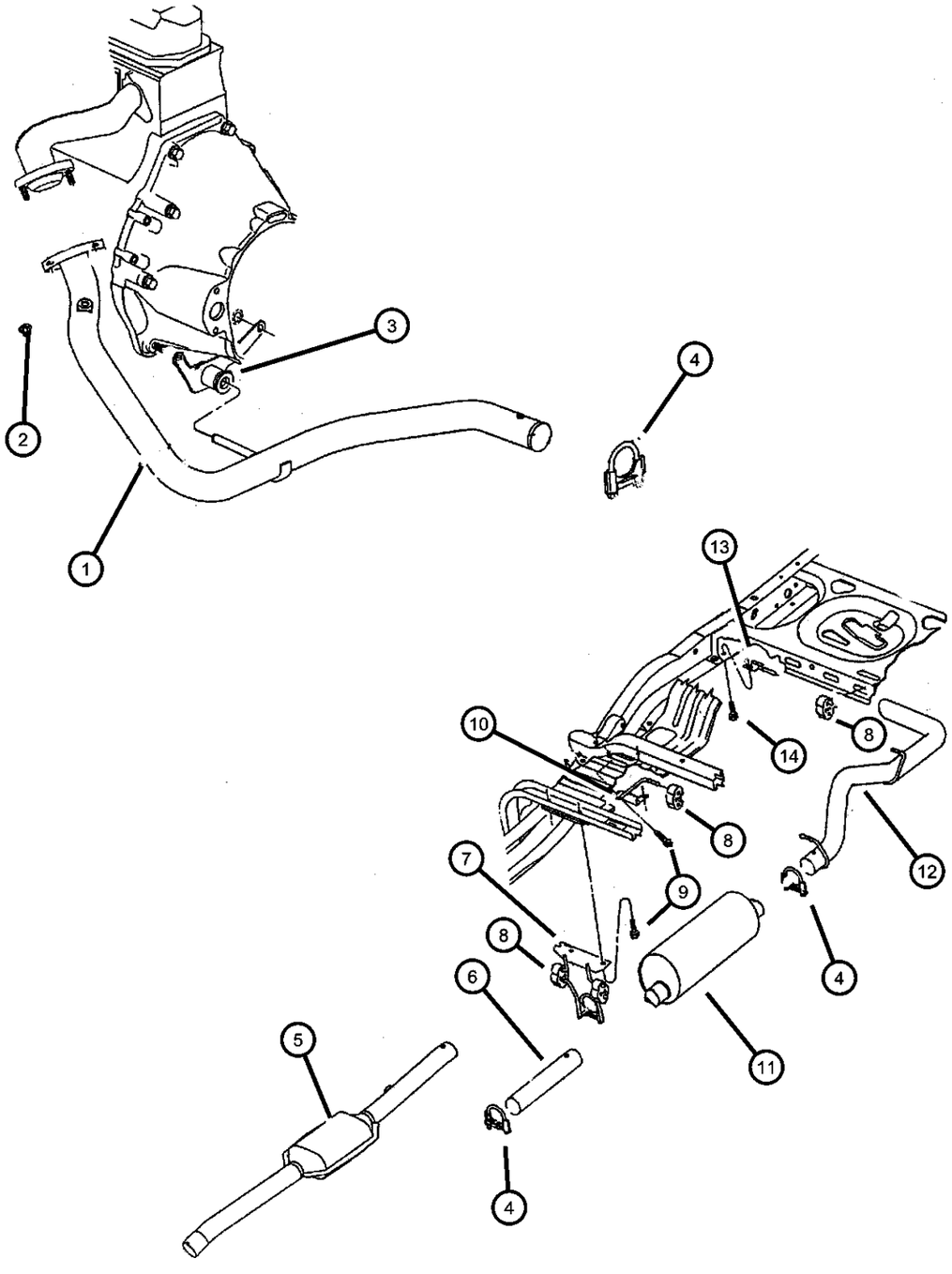

ITEM	PART NUMBER	QTY	LINE	SERIES	BODY	ENGINE	TRANS	TRIM	DESCRIPTION
Note; EPO= All 2.5 Engines, EHO= All 3.9 Engines, EVO= All 4.7 Engines, EMO= All 5.9 Engines									
1	52020079AB	1	1			EP0			PIPE, Exhaust, Up To 2/4/00
2	J4005142	2				EP0			NUT, Hex Flange Lock
3	52019515	1	1			EP0			BRACKET, Exhaust Hanger
4	52001860AB	1				EP0			CLAMP, Exhaust
5									CONVERTER, Catalytic
	52103269AB	1	1		31, 61, 84	EP0			
	52103599AC	1	1			EP0			After 2/4/00
6	52103213AA	1	1		31	EP0			PIPE, Exhaust
7	52019493	1			31, 61				HANGER, Muffler
8	52017607	1			31, 61, 84	EH0, EP0, EV0			INSULATOR, Exhaust
	E0036369								Mopar V-Line Alternative Part
9	06101787	4			31, 61, 84	EH0, EM0, EV0			SCREW, Tapping, M8x20
10	52019493	1			31, 61				HANGER, Muffler
11	52022122AB	1	1		31, 61	EP0			MUFFLER, Exhaust
12	52022001AC	1	1		31, 61	EH0, EP0, EV0			TAILPIPE, Exhaust
13	52103037	1			31, 61, 84	EH0, EP0, EV0			BRACKET, Tailpipe
14	06100304	2	1						BOLT AND CONED WASHER, Hex Head, M8x25x20

DAKOTA (AN)

SERIES	LINE	BODY	ENGINE	TRANSMISSION
L = Quad Cab L = Regular Cab L = Club Cab	1 = Dakota 2WD 5 = Dakota 4WD	31 = CLUB CAB 2-DR 6.5 FT BOX 61 = REG CAB 6.5 FT BOX 84 = CREW CAB 4-DR W.B.1	EPO = 2.5L 4 Cyl. EHO = 3.9L 6 Cyl. EMO = 5.9L 8 Cyl. EVO = 4.7L Magnum EHC = 3.9L SMPI V6 EML = 5.9L V8 MPI Engine EPE = 2.5L POWER TECH I-4 Cyl. EVA = 4.7L V8 MPI	DDC = TRANSMISSION - 5-SPEED HD MANUAL DG4 = TRANSMISSION-MULTI-SPEED AUTO, 45RFE DGK = TRANSMISSION - 4-SPD. AUTOMATIC,42RE DGT = TRANSMISSION - 4-SPD. AUTOMATIC,46RE DGO = AUTO. TRANS.

Exhaust System
Figure 11-120

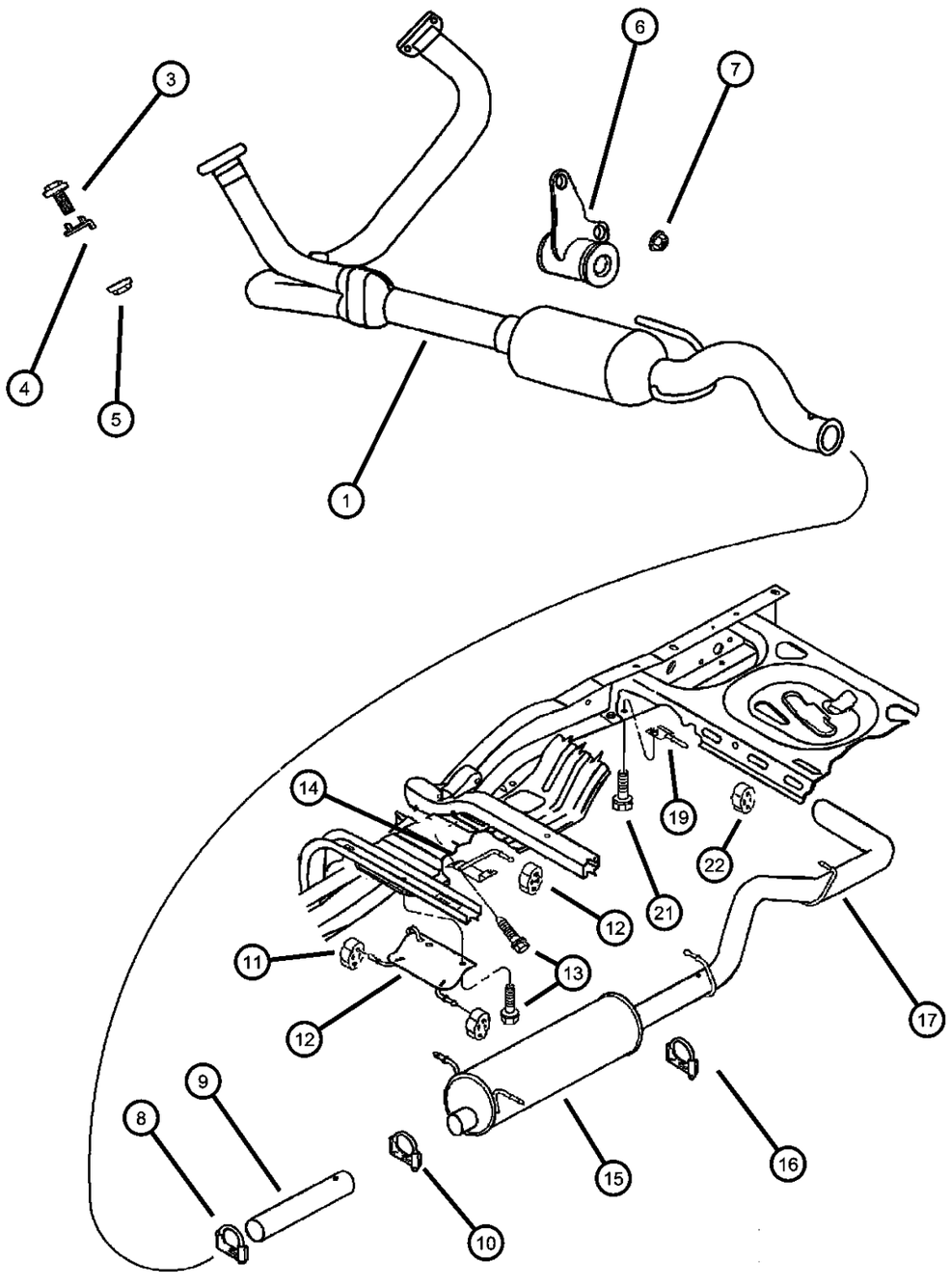

ITEM	PART NUMBER	QTY	LINE	SERIES	BODY	ENGINE	TRANS	TRIM	DESCRIPTION
Note; EPO= All 2.5 Engines, EHO= All 3.9 Engines, EVO= All 4.7 Engines, EMO= All 5.9 Engines									
1									CONVERTER, Catalytic
	52103252AB	1	1			EH0			Federal, Export
	52103253AC	1	5			EH0			Federal, California
	52103254AB	1	1			EV0			Federal, Export
	52103255AC	1	5			EV0			Federal, Export
	52103267AB	1	1			EM0			
	52103268AC	1	5			EM0			
	52103296AC	1	5			EV0			California
	52103527AB	1	1			EV0			California
	52103616AA	1	1		61	EH0	DG0		
-2									PIPE, Exhaust
	52103257AB	1	1			EH0			Leaded Fuel
	52103258AC	1	5			EH0			Leaded Fuel
3	06035375	4				EH0, EM0, EV0			BOLT, Hex Head, .375-16x2.50
4	04004001	4				EH0, EM0, EV0			RETAINER, Exhaust Pipe to Manifold
5	00118615	4				EH0, EM0, EV0			NUT, Hex, .375-16
6									BRACKET, Exhaust Hanger
	52103307AB	1	5						4.7L, 5.9L Engine
	52103308AB	1	5						3.9L Engine
7	06502337	2							NUT, M10x1.5
8	04004445	1							CLAMP, Exhaust
9									PIPE, Exhaust
	52103325AA	1			84	EH0, EM0, EV0			
	52103433AA	1			61	EH0, EM0, EP0, EV0			
	52103435AA	1			31	EH0, EM0, EP0, EV0			
10	04004445	1				EH0, EM0, EV0			CLAMP, Exhaust
11									HANGER, Muffler

DAKOTA (AN)

SERIES	LINE	BODY	ENGINE	TRANSMISSION
L = Quad Cab L = Regular Cab L = Club Cab	1 = Dakota 2WD 5 = Dakota 4WD	31 = CLUB CAB 2-DR 6.5 FT BOX 61 = REG CAB 6.5 FT BOX 84 = CREW CAB 4-DR W.B.1	EPO = 2.5L 4 Cyl. EHO = 3.9L 6 Cyl. EMO = 5.9L 8 Cyl. EVO = 4.7L Magnum EHC = 3.9L SMPI V6 EML = 5.9L V8 MPI Engine EPE = 2.5L POWER TECH I-4 Cyl. EVA = 4.7L V8 MPI	DDC = TRANSMISSION - 5-SPEED HD MANUAL DG4 = TRANSMISSION-MULTI-SPEED AUTO, 45RFE DGK = TRANSMISSION - 4-SPD. AUTOMATIC,42RE DGT = TRANSMISSION - 4-SPD. AUTOMATIC,46RE DGO = AUTO. TRANS.

Exhaust System
Figure 11-120

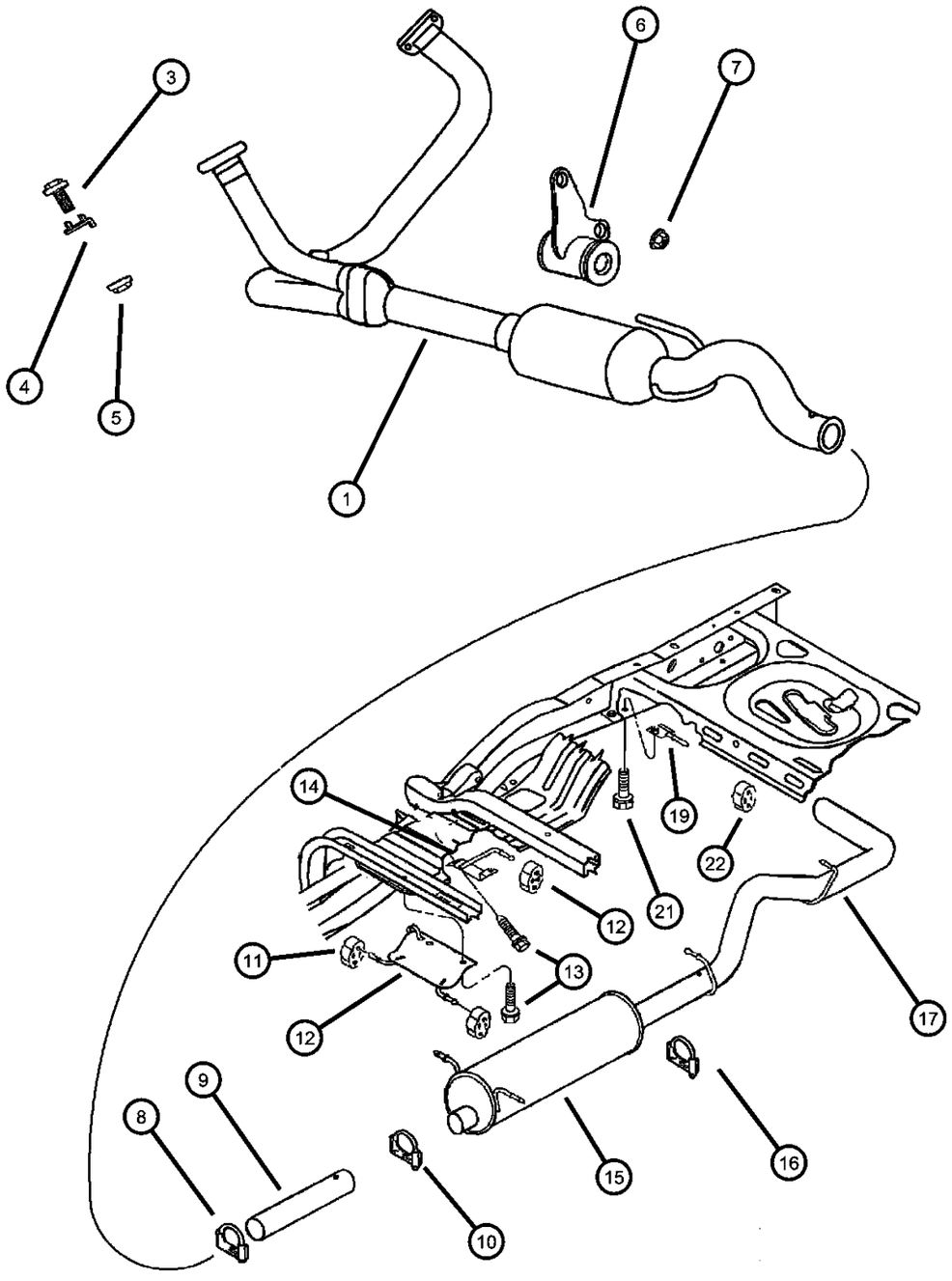

ITEM	PART NUMBER	QTY	LINE	SERIES	BODY	ENGINE	TRANS	TRIM	DESCRIPTION
	52103242AB	1			31, 61	EH0, EM0, EV0			
	52103265AB	1			84				
12	52017607	1							INSULATOR, Exhaust
	E0036369								Mopar V-Line Alternative Part
13	06101787	2							SCREW, Tapping, M8x20
14									HANGER, Muffler
	52019493	1			31, 61				
	52103245AA	1			84				
15									MUFFLER, Exhaust
	52103247AA	1			31, 61	EH0			
	E0019322								Dynomax Cat Back Single Exhaust Regular Cab Short Bed 2WD
	E0019323								Dynomax Cat Back Single Exhaust Regular Cab Short Bed 4WD
	E0019325								Dynomax Cat Back Single Exhaust Extended Cab Short Bed 2WD
	E0019324								Dynomax Cat Back Single Exhaust Extended Cab Short Bed 4WD
	E0019417								Dynomax Cat Back Dual Exhaust Short Bed Regular Cab
	52103248AA	1			31, 61	EV0			
	E0019322								Dynomax Cat Back Single Exhaust Regular Cab Short Bed 2WD
	E0019323								Dynomax Cat Back Single Exhaust Regular Cab Short Bed 4WD
	E0019325								Dynomax Cat Back Single Exhaust Extended Cab Short Bed 2WD
	E0019324								Dynomax Cat Back Single Exhaust Extended Cab Short Bed 4WD
	E0019417								Dynomax Cat Back Dual Exhaust Short Bed Regular Cab

DAKOTA (AN)

SERIES	LINE	BODY	ENGINE	TRANSMISSION
L = Quad Cab L = Regular Cab L = Club Cab	1 = Dakota 2WD 5 = Dakota 4WD	31 = CLUB CAB 2-DR 6.5 FT BOX 61 = REG CAB 6.5 FT BOX 84 = CREW CAB 4-DR W.B.1	EPO = 2.5L 4 Cyl. EHO = 3.9L 6 Cyl. EMO = 5.9L 8 Cyl. EVO = 4.7L Magnum EHC = 3.9L SMPI V6 EML = 5.9L V8 MPI Engine EPE = 2.5L POWER TECH I-4 Cyl. EVA = 4.7L V8 MPI	DDC = TRANSMISSION - 5-SPEED HD MANUAL DG4 = TRANSMISSION-MULTI-SPEED AUTO, 45RFE DGK = TRANSMISSION - 4-SPD. AUTOMATIC,42RE DGT = TRANSMISSION - 4-SPD. AUTOMATIC,46RE DGO = AUTO. TRANS.

Exhaust System
Figure 11-120

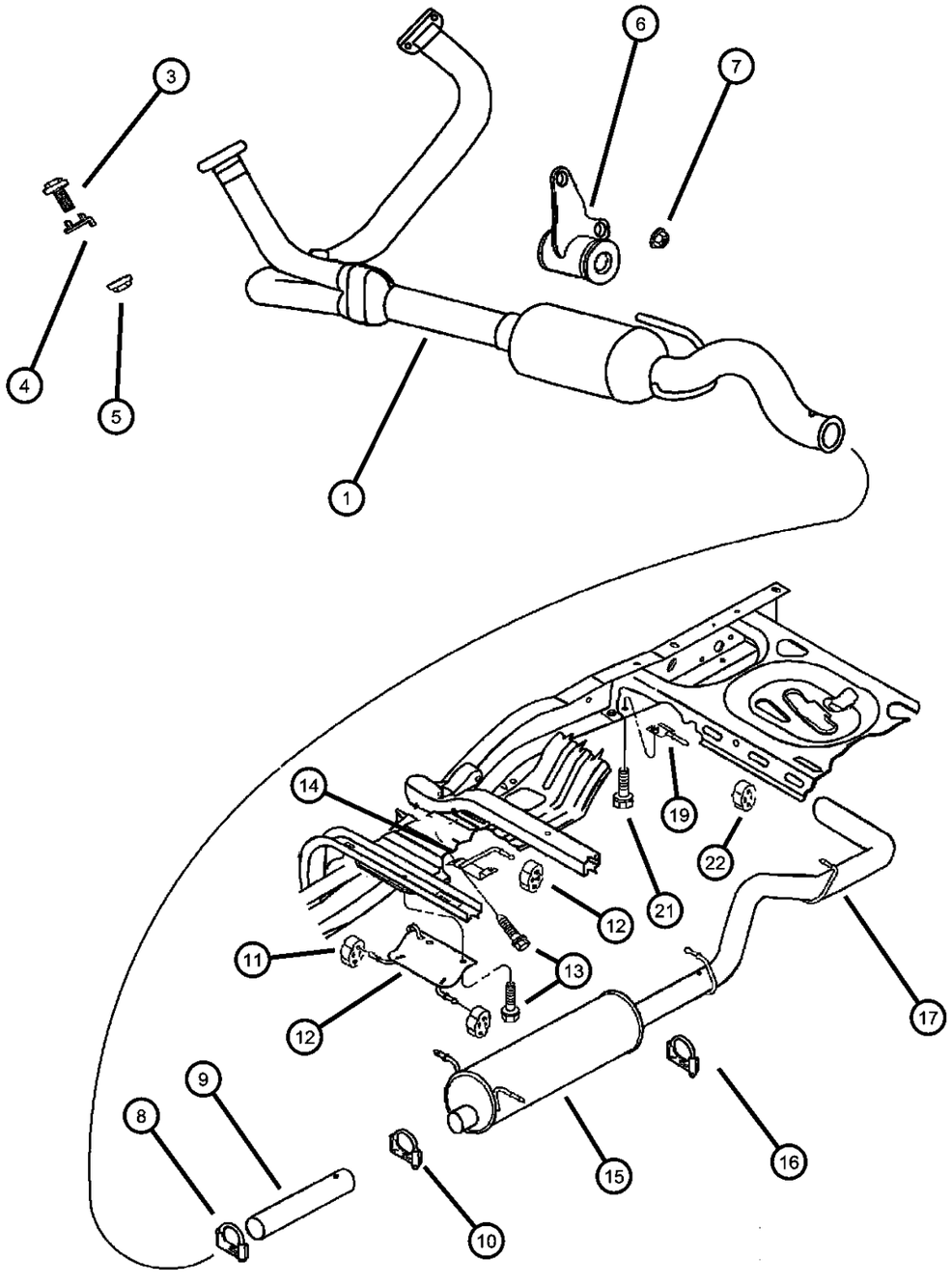

ITEM	PART NUMBER	QTY	LINE	SERIES	BODY	ENGINE	TRANS	TRIM	DESCRIPTION
	52103249AA	1			84	EH0			
	E0019320								Dynomax Cat Back Single Exhaust Quad Cab 2WD
	E0019321								Dynomax Cat Back Single Exhaust Quad Cab 4WD
	52103270AA	1			84	EM0, EV0			
	E0019320								Dynomax Cat Back Single Exhaust Quad Cab 2WD
	E0019321								Dynomax Cat Back Single Exhaust Quad Cab 4WD
	52103323AA	1	1		31, 61	EM0			
	E0019322								Dynomax Cat Back Single Exhaust Regular Cab Short Bed 2WD
	E0019323								Dynomax Cat Back Single Exhaust Regular Cab Short Bed 4WD
	E0019325								Dynomax Cat Back Single Exhaust Extended Cab Short Bed 2WD
	E0019324								Dynomax Cat Back Single Exhaust Extended Cab Short Bed 4WD
	E0019423								Dynomax Cat Back Dual Exhaust Short Bed Extended Cab
16	04004445	1							CLAMP, Exhaust
17									TAILPIPE, Exhaust
	52022001AC	1	1		31, 61	EH0, EP0, EV0			
	52103040AC	1	5		31, 61	EH0, EV0			
	52103250AB	1	1		84				
	52103251AB	1	5		84				
-18	52103262AB	1	1		31, 61	EM0			PIPE, Tail
19									BRACKET, Tailpipe
	52103037	1				EH0, EP0, EV0			
		1				EM0			Model 84 Only
-20	52103064	1	1		31, 61	EM0			BRACKET, Exhaust Pipe

DAKOTA (AN)

SERIES	LINE	BODY	ENGINE	TRANSMISSION
L = Quad Cab L = Regular Cab L = Club Cab	1 = Dakota 2WD 5 = Dakota 4WD	31 = CLUB CAB 2-DR 6.5 FT BOX 61 = REG CAB 6.5 FT BOX 84 = CREW CAB 4-DR W.B.1	EPO = 2.5L 4 Cyl. EHO = 3.9L 6 Cyl. EMO = 5.9L 8 Cyl. EVO = 4.7L Magnum EHC = 3.9L SMPI V6 EML = 5.9L V8 MPI Engine EPE = 2.5L POWER TECH I-4 Cyl. EVA = 4.7L V8 MPI	DDC = TRANSMISSION - 5-SPEED HD MANUAL DG4 = TRANSMISSION-MULTI-SPEED AUTO, 45RFE DGK = TRANSMISSION - 4-SPD. AUTOMATIC,42RE DGT = TRANSMISSION - 4-SPD. AUTOMATIC,46RE DGO = AUTO. TRANS.

Exhaust System
Figure 11-120

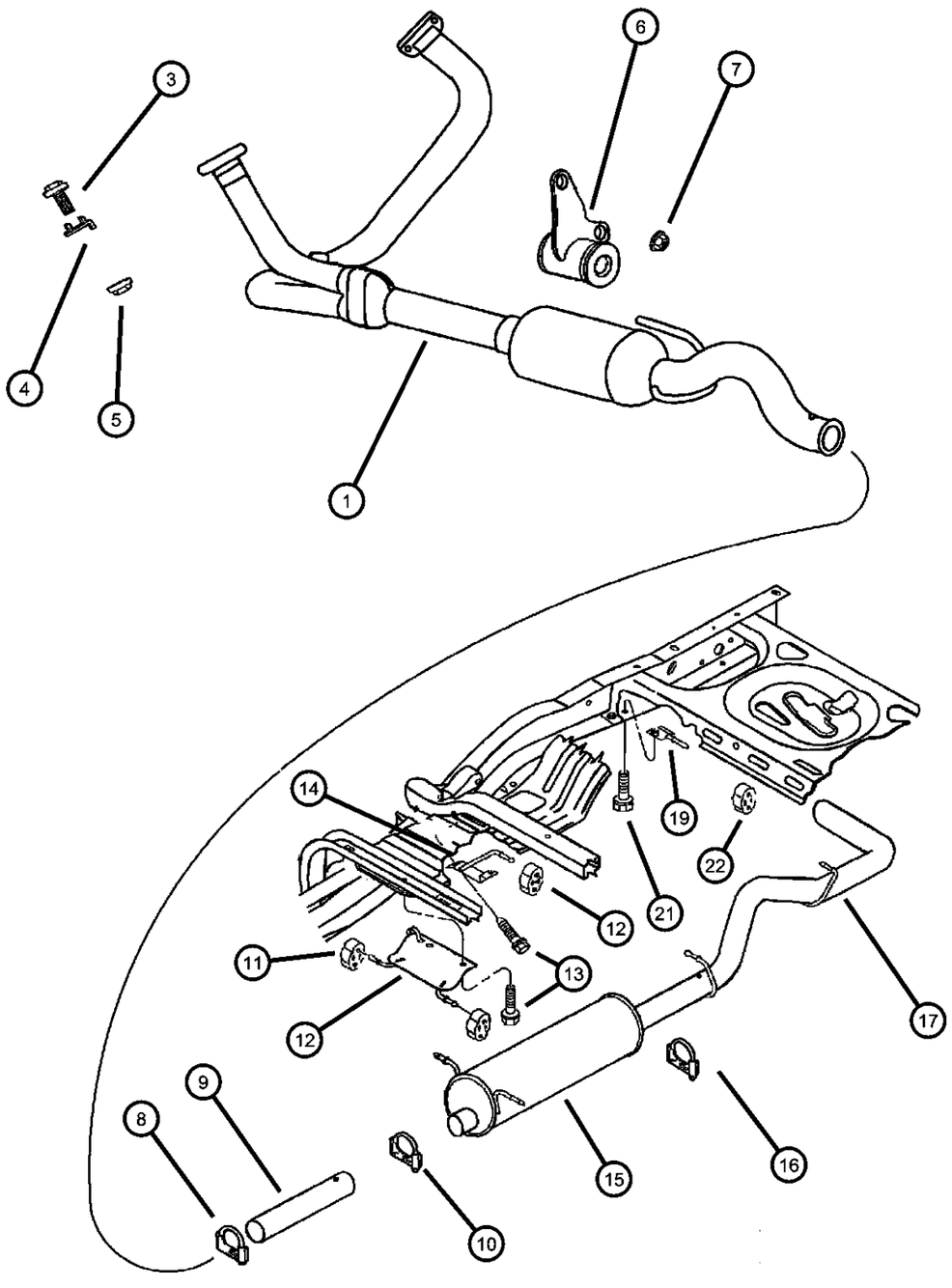

ITEM	PART NUMBER	QTY	LINE	SERIES	BODY	ENGINE	TRANS	TRIM	DESCRIPTION
21	06100304	2	1						BOLT AND CONED WASHER, Hex Head, M8x25x20
22									INSULATOR, Exhaust
	52017607	1			31, 61, 84	EH0, EP0, EV0			
	E0036369								Mopar V-Line Alternative Part
		1	5		31, 61, 84	EM0			
	E0036369								Mopar V-Line Alternative Part
-23	04616750	2	1		31, 61	EM0			ISOLATOR, Exhaust Support
-24	56043134AD	1			31, 61	EV0			STRAP, Ground
-25	52103616AA	1	1		61	EH0	DG0		CONVERTER, Catalytic

DAKOTA (AN)

SERIES	LINE	BODY	ENGINE	TRANSMISSION
L = Quad Cab	1 = Dakota 2WD	31 = CLUB CAB 2-DR 6.5 FT BOX	EPO = 2.5L 4 Cyl.	DDC = TRANSMISSION - 5-SPEED HD MANUAL
L = Regular Cab	5 = Dakota 4WD	61 = REG CAB 6.5 FT BOX	EHO = 3.9L 6 Cyl.	DG4 = TRANSMISSION-MULTI-SPEED AUTO, 45RFE
L = Club Cab		84 = CREW CAB 4-DR W.B.1	EMO = 5.9L 8 Cyl.	DGK = TRANSMISSION - 4-SPD. AUTOMATIC,42RE
			EVO = 4.7L Magnum	DGT = TRANSMISSION - 4-SPD. AUTOMATIC,46RE
			EHC = 3.9L SMPI V6	DGO = AUTO. TRANS.
			EML = 5.9L V8 MPI Engine	
			EPE = 2.5L POWER TECH I-4 Cyl.	
			EVA = 4.7L V8 MPI	

Heat Shields
Figure 11-210

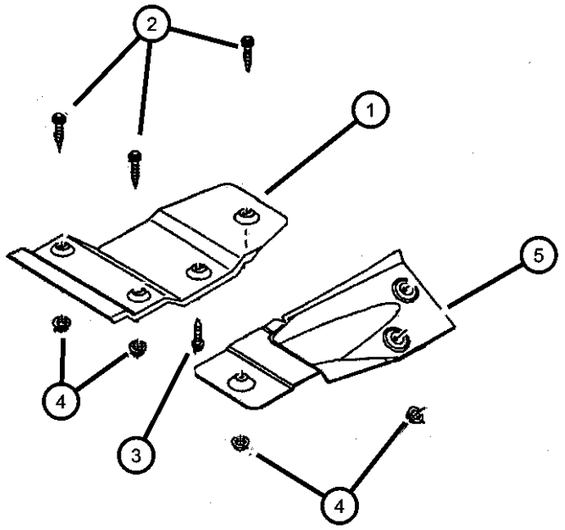

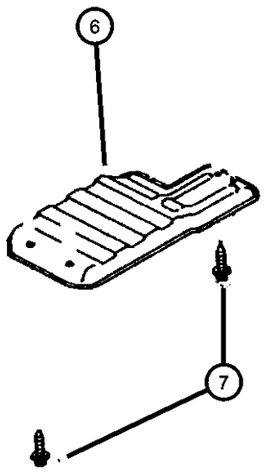

ITEM	PART NUMBER	QTY	LINE	SERIES	BODY	ENGINE	TRANS	TRIM	DESCRIPTION
1									SHIELD, Heat
	55255815	1			61				
	55255816AB	1			31				
2	55255816AB	1							SCREW, Hex Flange Head, .25-20x.875, (NOT SERVICED)
3									SCREW
	06035506	3			31, 84				
		1			61				
4		1							NUT, .25-20, (NOT SERVICED)
5	55257300AC	1							SHIELD, Heat
6	04266926	1			31, 61				SHIELD, Heat
7	06101787	2							SCREW, Tapping, M8x20

DAKOTA (AN)

SERIES	LINE	BODY	ENGINE	TRANSMISSION
L = Quad Cab L = Regular Cab L = Club Cab	1 = Dakota 2WD 5 = Dakota 4WD	31 = CLUB CAB 2-DR 6.5 FT BOX 61 = REG CAB 6.5 FT BOX 84 = CREW CAB 4-DR W.B.1	EPO = 2.5L 4 Cyl. EHO = 3.9L 6 Cyl. EMO = 5.9L 8 Cyl. EVO = 4.7L Magnum EHC = 3.9L SMPI V6 EML = 5.9L V8 MPI Engine EPE = 2.5L POWER TECH I-4 Cyl. EVA = 4.7L V8 MPI	DDC = TRANSMISSION - 5-SPEED HD MANUAL DG4 = TRANSMISSION-MULTI-SPEED AUTO, 45RFE DGK = TRANSMISSION - 4-SPD. AUTOMATIC,42RE DGT = TRANSMISSION - 4-SPD. AUTOMATIC,46RE DGO = AUTO. TRANS.

Group - 13

Frames and Bumpers

013-100 Frames	013-200 Front Bumper and Fascia	013-300 Rear Bumper and Fascia	013-500 Body Hold Down
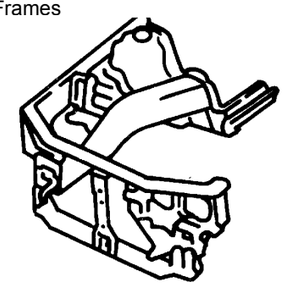	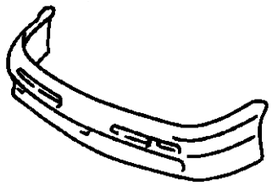		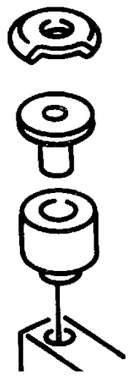

Group - 13 Frames and Bumpers

Illustration Title — Group-Fig. No.

Frames
Frame ..... Fig. 13 - 110

Front Bumper and Fascia
Bumper, Front ..... Fig. 13 - 210

Rear Bumper and Fascia
Bumper, Rear ..... Fig. 13 - 310

Body Hold Down
Body Hold Down ..... Fig. 13 - 510

Frame
Figure 13-110

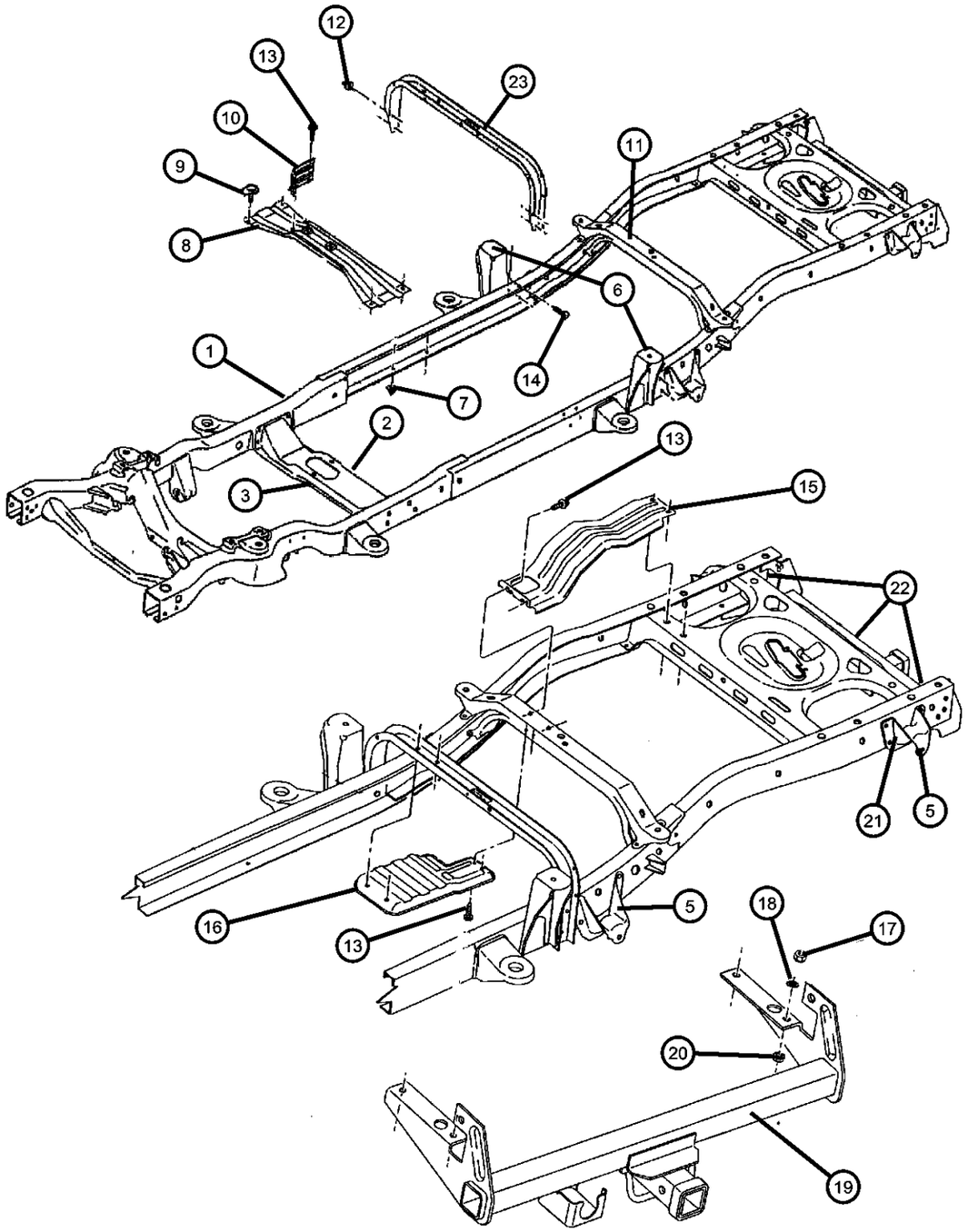

ITEM	PART NUMBER	QTY	LINE	SERIES	BODY	ENGINE	TRANS	TRIM	DESCRIPTION
1									FRAME, Chassis
	52020401AC	1	1		84				
	52020408AC	1	5		84				
	52059002AH	1	1		61				
	52059004AI	1	1		31				
	52059005AB	1	5		61				
	52059007AF	1	5		31				
2									CROSSMEMBER, Front Support
	52058736AB	1	1		61				
		1	1		31				
		1	1		84				
3	52020253AB	1	5		31, 61, 84				CROSSMEMBER, Transmission
-4									CROSSMEMBER, Transmission
	52020253AB	1	5		31, 61				
		1	5		84				
5									SHACKLE, Spring
	52019880	1	1		61				Front, Right
		1	1		31				Front, Right
		1	5		61				Rear, Right
		1	5		31				Rear, Right
		1	1		84				Front, Right
		1	5		84				Rear, Right
	52019881	1	1		61				Front, Left
		1	1		31				Front, Left
		1	5		61				Rear, Left
		1	5		31				Rear, Left
		1	1		84				Front, Left
		1	5		84				Rear, Left
6									BRACKET, Box
	52058389	2	1		61				
		2	1		31				
		2	5		61				

DAKOTA (AN)

SERIES	LINE	BODY	ENGINE	TRANSMISSION
L = Quad Cab L = Regular Cab L = Club Cab	1 = Dakota 2WD 5 = Dakota 4WD	31 = CLUB CAB 2-DR 6.5 FT BOX 61 = REG CAB 6.5 FT BOX 84 = CREW CAB 4-DR W.B.1	EPO = 2.5L 4 Cyl. EHO = 3.9L 6 Cyl. EMO = 5.9L 8 Cyl. EVO = 4.7L Magnum EHC = 3.9L SMPI V6 EML = 5.9L V8 MPI Engine EPE = 2.5L POWER TECH I-4 Cyl. EVA = 4.7L V8 MPI	DDC = TRANSMISSION - 5-SPEED HD MANUAL DG4 = TRANSMISSION-MULTI-SPEED AUTO, 45RFE DGK = TRANSMISSION - 4-SPD. AUTOMATIC,42RE DGT = TRANSMISSION - 4-SPD. AUTOMATIC,46RE DGO = AUTO. TRANS.

AR = use ase required - = Non illustrrated part

Frame
Figure 13-110

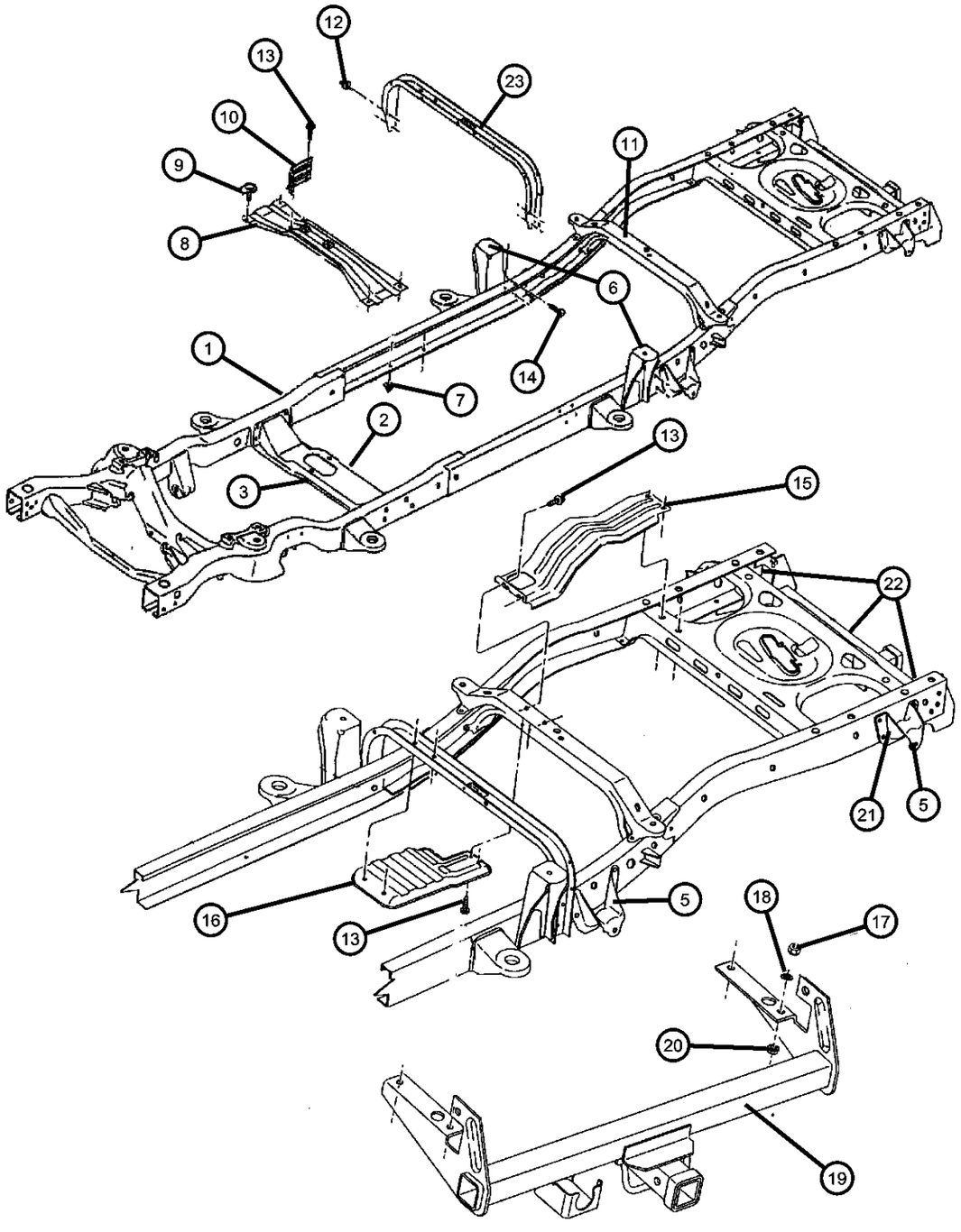

ITEM	PART NUMBER	QTY	LINE	SERIES	BODY	ENGINE	TRANS	TRIM	DESCRIPTION
		2	5		31				
7		2							NUT, (NOT SERVICED)
8									CROSSMEMBER, Center Bearing Mount
	52020302AC	1	1		31				with Auto Trans.
	52059745	1	1		31				
9	06504677	4			84				BOLT AND RETAINER, M10X1.50X34.50
10	52019569	1	1		31, 62				SHIELD, Heat
11									CROSSMEMBER, Fuel Tank
	52019584	1	1		61				
		1	1		31				
		1	5		61				
		1	5		31				
		1	1		84				
		1	5		84				
12	06502979	4							NUT AND WASHER, Hex, M10x1.5
13	06101787	2							SCREW, Tapping, M8x20
14	06102011	4			31, 61				BOLT, M10x1.50x25
15	52019901	1							SHIELD, Heat
16	04266926	1			31, 61				SHIELD, Heat
17	06503252	4			31, 61, 84				BOLT, Hex Flange Head, M12x1.75x45
18	06101696	2	1		31, 61, 84				NUT
19	52019943AC	1							HITCH, Trailer
20	06100055	4							NUT AND WASHER, Hex Nut-Coned Washer, M12 x 1.75
21									BRACKET, Spring
	52019973	2	5		61				Rear
		2	5		31				Rear
		2	5		84				Rear
22									DAMPER, Mass
	52021101AA	1			84				Damper, Rear
	52021202AA	1			84				Bracket, Right

DAKOTA (AN)

SERIES	LINE	BODY	ENGINE	TRANSMISSION
L = Quad Cab L = Regular Cab L = Club Cab	1 = Dakota 2WD 5 = Dakota 4WD	31 = CLUB CAB 2-DR 6.5 FT BOX 61 = REG CAB 6.5 FT BOX 84 = CREW CAB 4-DR W.B.1	EPO = 2.5L 4 Cyl. EHO = 3.9L 6 Cyl. EMO = 5.9L 8 Cyl. EVO = 4.7L Magnum EHC = 3.9L SMPI V6 EML = 5.9L V8 MPI Engine EPE = 2.5L POWER TECH I-4 Cyl. EVA = 4.7L V8 MPI	DDC = TRANSMISSION - 5-SPEED HD MANUAL DG4 = TRANSMISSION-MULTI-SPEED AUTO, 45RFE DGK = TRANSMISSION - 4-SPD. AUTOMATIC,42RE DGT = TRANSMISSION - 4-SPD. AUTOMATIC,46RE DGO = AUTO. TRANS.

Frame
Figure 13-110

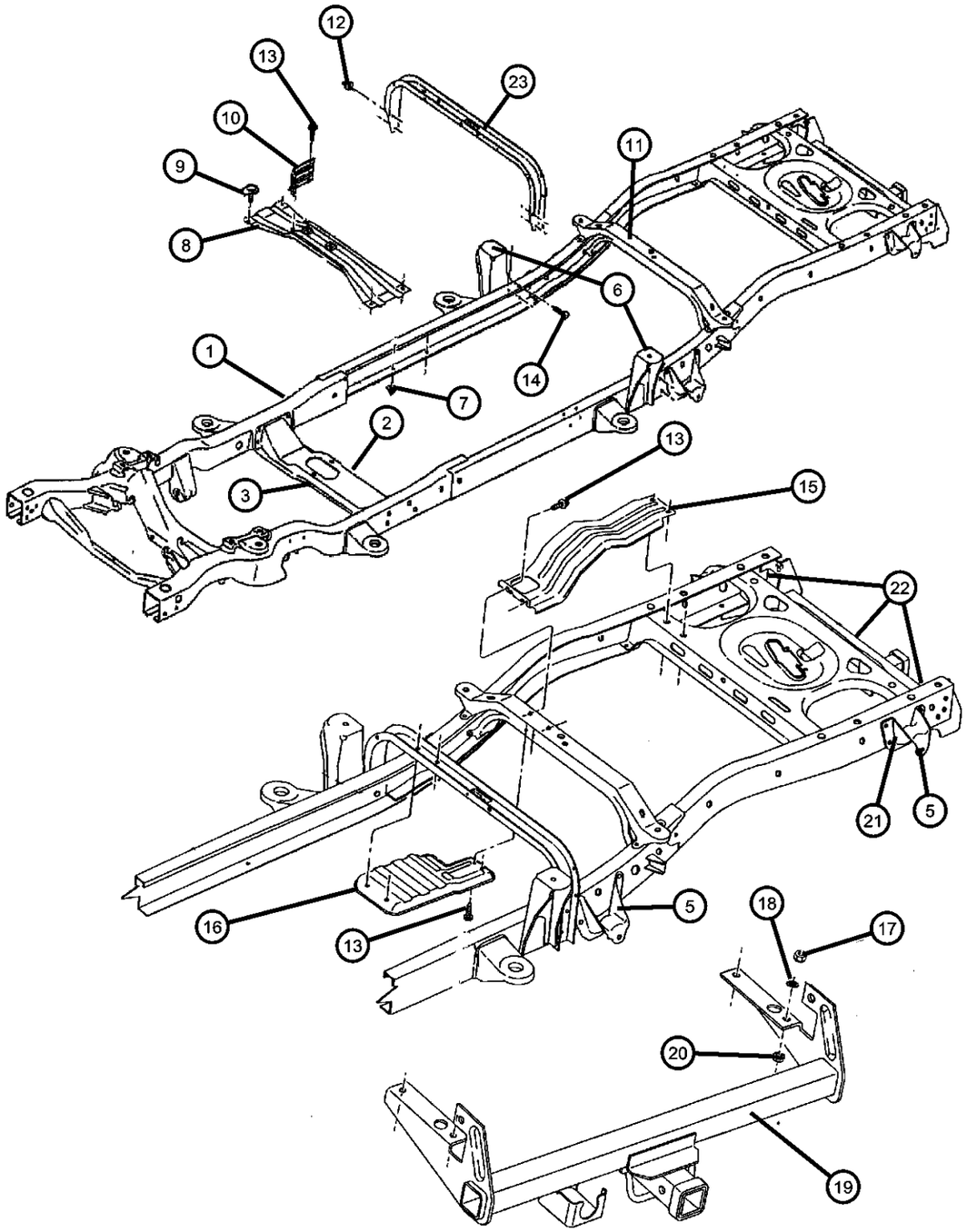

ITEM	PART NUMBER	QTY	LINE	SERIES	BODY	ENGINE	TRANS	TRIM	DESCRIPTION
	52021203AA	1			84				Bracket, Left
23	52019657	1			31, 61				CROSSMEMBER, Fuel Tank

DAKOTA (AN)

SERIES	LINE	BODY	ENGINE	TRANSMISSION
L = Quad Cab L = Regular Cab L = Club Cab	1 = Dakota 2WD 5 = Dakota 4WD	31 = CLUB CAB 2-DR 6.5 FT BOX 61 = REG CAB 6.5 FT BOX 84 = CREW CAB 4-DR W.B.1	EPO = 2.5L 4 Cyl. EHO = 3.9L 6 Cyl. EMO = 5.9L 8 Cyl. EVO = 4.7L Magnum EHC = 3.9L SMPI V6 EML = 5.9L V8 MPI Engine EPE = 2.5L POWER TECH I-4 Cyl. EVA = 4.7L V8 MPI	DDC = TRANSMISSION - 5-SPEED HD MANUAL DG4 = TRANSMISSION-MULTI-SPEED AUTO, 45RFE DGK = TRANSMISSION - 4-SPD. AUTOMATIC,42RE DGT = TRANSMISSION - 4-SPD. AUTOMATIC,46RE DGO = AUTO. TRANS.

Bumper, Front
Figure 13-210

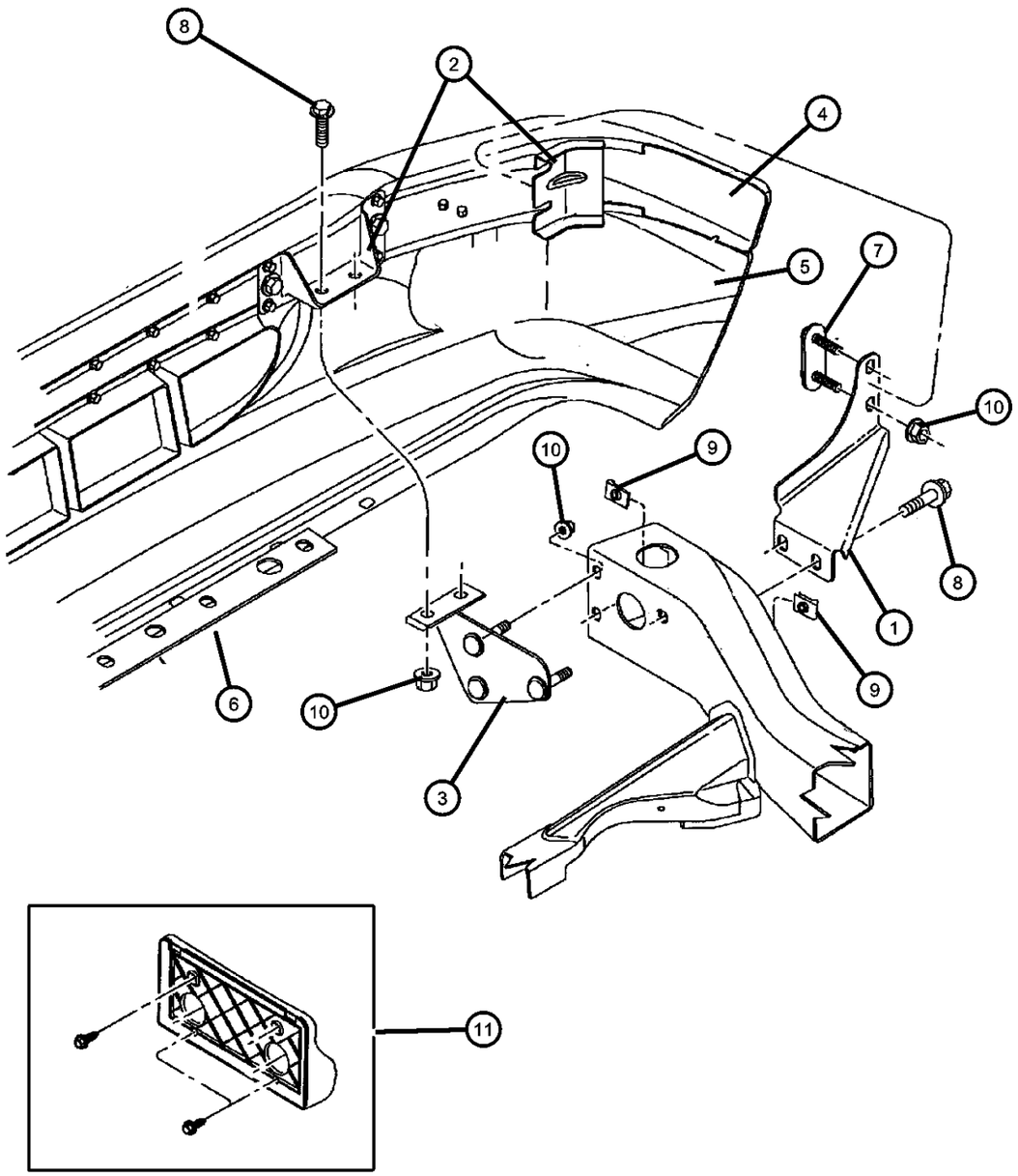

ITEM	PART NUMBER	QTY	LINE	SERIES	BODY	ENGINE	TRANS	TRIM	DESCRIPTION
1									BRACKET, Bumper to Frame Rail
	55255026AC	1							Right
	55255027AC	1							Left
2									BRACKET, Front Bumper
	55076528	1							Inner Mounting, Right
	55076529	1							Inner Mounting, Left
	55076530AB	2							Outer Mounting.
3	55256046AB	1							BRACKET, Front BumperInner
4									BUMPER, Front
	55255844AB	1							Bright
	55255845	1							(Paint as Reqiured)
5									FASCIA, Front
	04897588AB	1							Smooth, without Fog Lamps
	05013071AB	1							Smooth, with Fog Lamps
	55076531AB	1							Textured, with Fog Lamps
	55076871AB	1							Textured, without Fog Lamps
6	55076409AB	1							PANEL, Front Facsia
7	06504144	2							BOLT AND RETAINER, M12X1.75X35.00
8	06504531	4							BOLT, Hex Flange Head, M12x1.75x30
9	06504565	2							NUT, U Multi Thread
10	06100055	4							NUT AND WASHER, Hex Nut-Coned Washer, M12 x 1.75
11	55076597	1							LICENSE PLATE KIT
-12	05015852AA	2							REINFORCEMENT AND NUT

DAKOTA (AN)

SERIES	LINE	BODY	ENGINE	TRANSMISSION
L = Quad Cab L = Regular Cab L = Club Cab	1 = Dakota 2WD 5 = Dakota 4WD	31 = CLUB CAB 2-DR 6.5 FT BOX 61 = REG CAB 6.5 FT BOX 84 = CREW CAB 4-DR W.B.1	EPO = 2.5L 4 Cyl. EHO = 3.9L 6 Cyl. EMO = 5.9L 8 Cyl. EVO = 4.7L Magnum EHC = 3.9L SMPI V6 EML = 5.9L V8 MPI Engine EPE = 2.5L POWER TECH I-4 Cyl. EVA = 4.7L V8 MPI	DDC = TRANSMISSION - 5-SPEED HD MANUAL DG4 = TRANSMISSION-MULTI-SPEED AUTO, 45RFE DGK = TRANSMISSION - 4-SPD. AUTOMATIC,42RE DGT = TRANSMISSION - 4-SPD. AUTOMATIC,46RE DGO = AUTO. TRANS.

Bumper, Rear
Figure 13-310

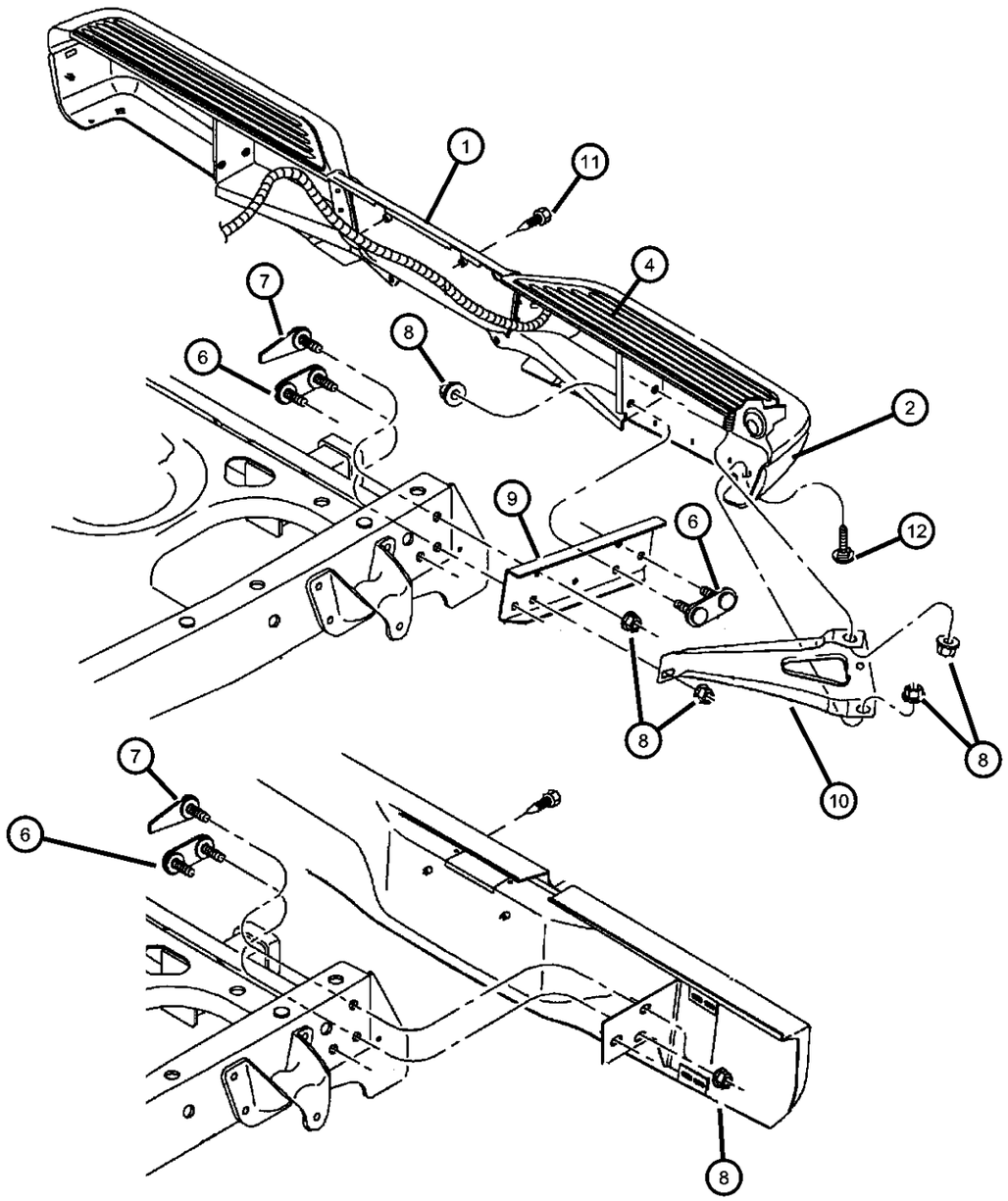

ITEM	PART NUMBER	QTY	LINE	SERIES	BODY	ENGINE	TRANS	TRIM	DESCRIPTION
1									BUMPER, Step
	55295665	1							Chrome
	55295666AB	1							Base
	5FC761W7	1							Paint as Req.
2									COVER, Bumper
	04883042	1							Paint as Req., Right
	04883043	1							Paint as Req., Left
	55255904	AR							Textured Grey, Right
	55255905	1							Textured Grey, Left
-3	55255905	1							PIN, Splash Shield, (NOT SERVICED),
4									STEP PAD, Rear Bumper
	55255902	1							Right
	55255903	1							Left
-5	55255893	1							PANEL, License Plate
6	06504144	2							BOLT AND RETAINER, M12X1.75X35.00
7	06504145	2							BOLT AND RETAINER, Pilot Point, M63.2X11.2X2.0
8	06100055	14							NUT AND WASHER, Hex Nut-Coned Washer, M12 x 1.75
9	55295672	2							BRACKET, Rear Bumper, Center
10									BRACKET, Rear Bumper
	55295674AB	1							Right
	55295675AB	1							Left
11	06505030AA	2			31				SCREW
12	06504122	2							BOLT, M12x1.75x35.00

DAKOTA (AN)

SERIES	LINE	BODY	ENGINE	TRANSMISSION
L = Quad Cab L = Regular Cab L = Club Cab	1 = Dakota 2WD 5 = Dakota 4WD	31 = CLUB CAB 2-DR 6.5 FT BOX 61 = REG CAB 6.5 FT BOX 84 = CREW CAB 4-DR W.B.1	EPO = 2.5L 4 Cyl. EHO = 3.9L 6 Cyl. EMO = 5.9L 8 Cyl. EVO = 4.7L Magnum EHC = 3.9L SMPI V6 EML = 5.9L V8 MPI Engine EPE = 2.5L POWER TECH I-4 Cyl. EVA = 4.7L V8 MPI	DDC = TRANSMISSION - 5-SPEED HD MANUAL DG4 = TRANSMISSION-MULTI-SPEED AUTO, 45RFE DGK = TRANSMISSION - 4-SPD. AUTOMATIC,42RE DGT = TRANSMISSION - 4-SPD. AUTOMATIC,46RE DGO = AUTO. TRANS.

AR = use ase required - = Non illustrrated part

Body Hold Down
Figure 13-510

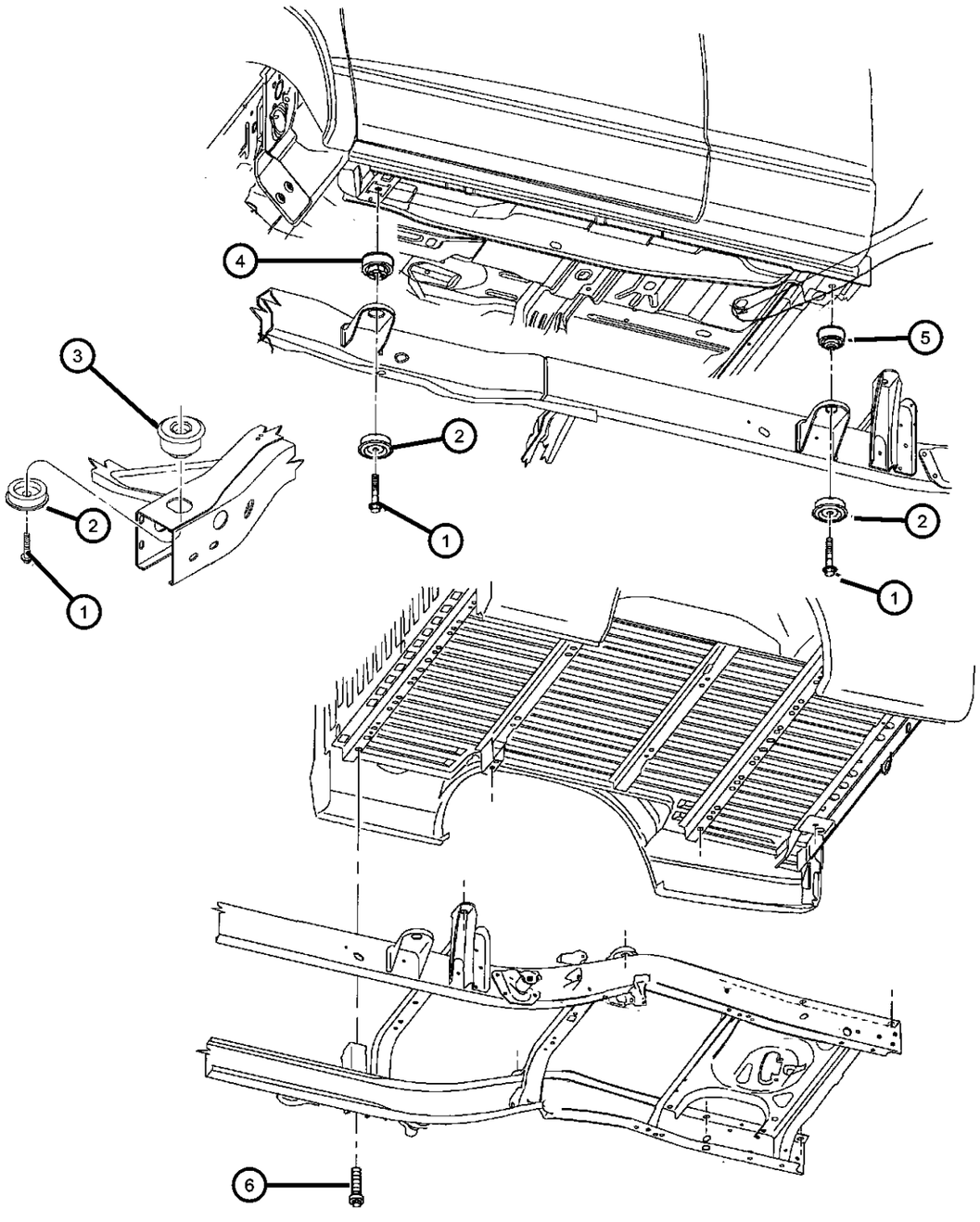

ITEM	PART NUMBER	QTY	LINE	SERIES	BODY	ENGINE	TRANS	TRIM	DESCRIPTION
1	06501557	6							BOLT, Hex Flange Head, M12x1.75x95.50
2									ISOLATOR, Cab Underbody Rebound
	55255812	6			31, 61				
		8			84				
3	55255703	2			31, 61, 84				ISOLATOR
4	55255704	2			31, 61, 84				ISOLATOR, Front Cab Compression
5									ISOLATOR, Front Cab Compression
	55255706	2			61, 84				Rear
	55255995	2			31				Rear
6									SCREW AND WASHER, Hex Head, M10x1.5x45
	06503298	8			31, 61				
		6			84				

DAKOTA (AN)

SERIES	LINE	BODY	ENGINE	TRANSMISSION
L = Quad Cab	1 = Dakota 2WD	31 = CLUB CAB 2-DR 6.5 FT BOX	EPO = 2.5L 4 Cyl.	DDC = TRANSMISSION - 5-SPEED HD MANUAL
L = Regular Cab	5 = Dakota 4WD	61 = REG CAB 6.5 FT BOX	EHO = 3.9L 6 Cyl.	DG4 = TRANSMISSION-MULTI-SPEED AUTO, 45RFE
L = Club Cab		84 = CREW CAB 4-DR W.B.1	EMO = 5.9L 8 Cyl.	DGK = TRANSMISSION - 4-SPD. AUTOMATIC,42RE
			EVO = 4.7L Magnum	DGT = TRANSMISSION - 4-SPD. AUTOMATIC,46RE
			EHC = 3.9L SMPI V6	DGO = AUTO. TRANS.
			EML = 5.9L V8 MPI Engine	
			EPE = 2.5L POWER TECH I-4 Cyl.	
			EVA = 4.7L V8 MPI	

Group - 14

Fuel

014-100 Tank, Fuel 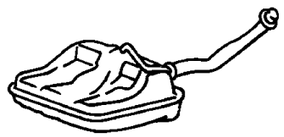	**014-1000** Speed Control 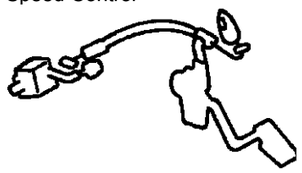	**014-1100** Accelerator Pedal 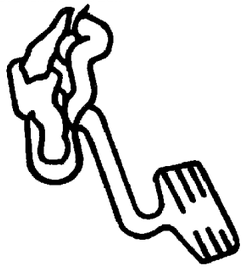	**014-200** Fuel Tank Filler Tube 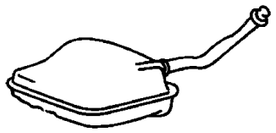
014-300 Fuel Lines 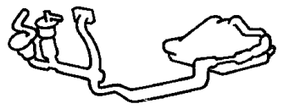	**014-400** Fuel Rail 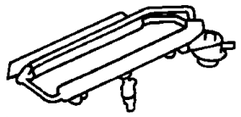	**014-500** Fuel Pump and Sending Unit 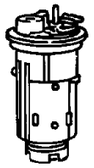	**014-600** Throttle Body
014-700 Throttle Controls 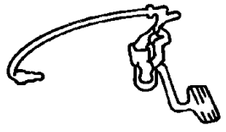	**014-800** Air Cleaner 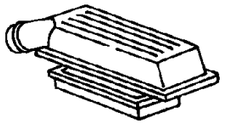		

Group - 14 Fuel

Illustration Title — Group-Fig. No.

Tank, Fuel
Fuel Tank ..... Fig. 14 - 105

Fuel Tank Filler Tube
Fuel Filler Tube ..... Fig. 14 - 220

Fuel Lines
Fuel Lines, Front ..... Fig. 14 - 305
Fuel Lines, Rear ..... Fig. 14 - 310

Fuel Rail
Fuel Rail ..... Fig. 14 - 410

Fuel Pump and Sending Unit
Fuel Module ..... Fig. 14 - 510

Throttle Body
Throttle Body ..... Fig. 14 - 610

Throttle Controls
Throttle Controls ..... Fig. 14 - 710
Throttle Controls ..... Fig. 14 - 720

Air Cleaner
Air Cleaner ..... Fig. 14 - 815
Air Cleaner ..... Fig. 14 - 820

Speed Control
Speed Control ..... Fig. 14 - 1010

Accelerator Pedal
Accelerator Pedal ..... Fig. 14 - 1110

Fuel Tank
Figure 14-105

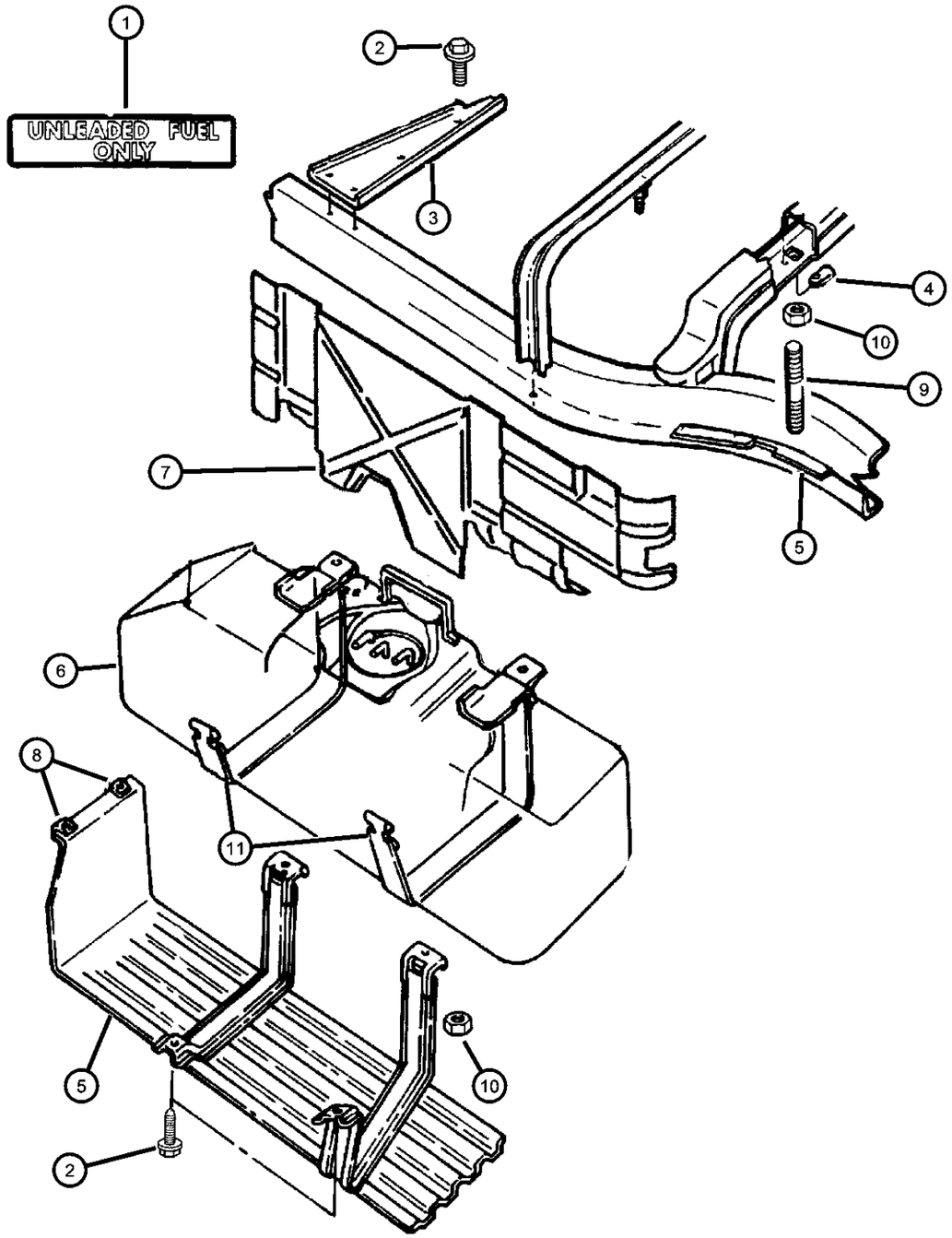

ITEM	PART NUMBER	QTY	LINE	SERIES	BODY	ENGINE	TRANS	TRIM	DESCRIPTION
1	04206059	1							LABEL, Unleaded Fuel Only
2	06101787	2							SCREW, Tapping, M8x20
3	04279783AB	1							BRACKET, Fuel Tank Skid Plate
4	06101340	2							U-NUT, M10-1.50
5	04279781	1							PLATE, Fuel Tank Skid
6									TANK, Fuel
	52102420AD	1			84				24 Gallon
	52102486AA	1			31, 61				22 Gallon
7									SHIELD, Fuel Tank
	04279775	1			31, 61				22 Gallon
	52102423AA	1			84				24 Gallon
8	06101283	2							U-NUT, M8x1.25
9	06503452	2							STUD, M10-1.50x82.50
10	06502337	2							NUT, M10x1.5
11									STRAP, Fuel Tank
	04279772	1			31, 61				Front
	04279773	1			31, 61				Rear
	52102424AA	1			84				Rear
	52102425AA	1			84				Front
-12	52102426AB	1	5		84				SKID PLATE, Fuel Tank
-13	05093327AA	1			84				TUBE, Fuel Vapor

DAKOTA (AN)

SERIES	LINE	BODY	ENGINE	TRANSMISSION
L = Quad Cab	1 = Dakota 2WD	31 = CLUB CAB 2-DR 6.5 FT BOX	EPO = 2.5L 4 Cyl.	DDC = TRANSMISSION - 5-SPEED HD MANUAL
L = Regular Cab	5 = Dakota 4WD	61 = REG CAB 6.5 FT BOX	EHO = 3.9L 6 Cyl.	DG4 = TRANSMISSION-MULTI-SPEED AUTO, 45RFE
L = Club Cab		84 = CREW CAB 4-DR W.B.1	EMO = 5.9L 8 Cyl.	DGK = TRANSMISSION - 4-SPD. AUTOMATIC,42RE
			EVO = 4.7L Magnum	DGT = TRANSMISSION - 4-SPD. AUTOMATIC,46RE
			EHC = 3.9L SMPI V6	DGO = AUTO. TRANS.
			EML = 5.9L V8 MPI Engine	
			EPE = 2.5L POWER TECH I-4 Cyl.	
			EVA = 4.7L V8 MPI	

Fuel Filler Tube
Figure 14-220

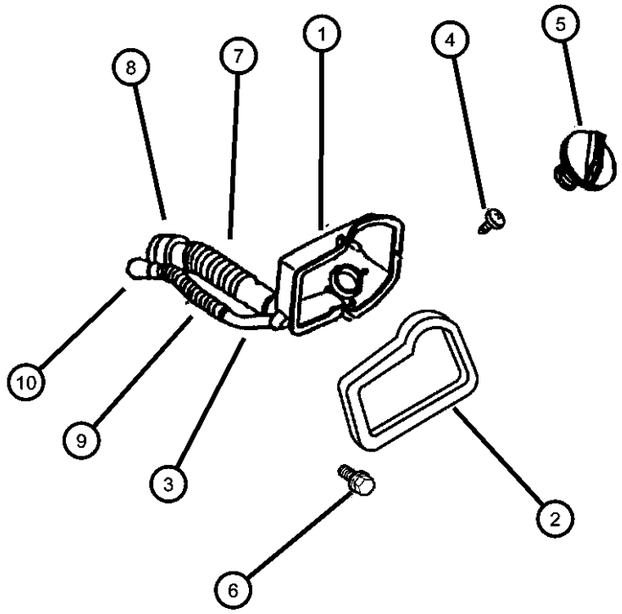

ITEM	PART NUMBER	QTY	LINE	SERIES	BODY	ENGINE	TRANS	TRIM	DESCRIPTION
1									HOUSING, Fuel Filler
	52102142AB	1			31, 61				
	55257271AA	1			84				
2	52102306	1			31, 61				GASKET, Filler Tube Housing
3									TUBE, Fuel Filler
	52102429AA	1			84				Federal, California
	52102481AA	1			31, 61				Federal, California
	52127646AD	1			31, 61				Leaded Fuel
4	00153856	4			31, 61				SCREW, Tapping, .19-16x.625
5	05278632AA	1							CAP, Fuel Filler
6	05278632AA	1							SCREW, .190-16x1.00, (NOT SERVICED)
7									HOSE, Fuel Filler
	52102484AA	1			84				
	52102487AA	1			31, 61				
8	06505321AA	2							CLAMP, Fuel Filler Pipe
9									HOSE, Fuel
	52102483AA	1			84				
	52102490AA	1			31, 61				
10	06504998AA	2							CLAMP, Fuel Filler Pipe

DAKOTA (AN)

SERIES	LINE	BODY	ENGINE	TRANSMISSION
L = Quad Cab	1 = Dakota 2WD	31 = CLUB CAB 2-DR 6.5 FT BOX	EPO = 2.5L 4 Cyl.	DDC = TRANSMISSION - 5-SPEED HD MANUAL
L = Regular Cab	5 = Dakota 4WD	61 = REG CAB 6.5 FT BOX	EHO = 3.9L 6 Cyl.	DG4 = TRANSMISSION-MULTI-SPEED AUTO, 45RFE
L = Club Cab		84 = CREW CAB 4-DR W.B.1	EMO = 5.9L 8 Cyl.	DGK = TRANSMISSION - 4-SPD. AUTOMATIC,42RE
			EVO = 4.7L Magnum	DGT = TRANSMISSION - 4-SPD. AUTOMATIC,46RE
			EHC = 3.9L SMPI V6	DGO = AUTO. TRANS.
			EML = 5.9L V8 MPI Engine	
			EPE = 2.5L POWER TECH I-4 Cyl.	
			EVA = 4.7L V8 MPI	

Fuel Lines, Front
Figure 14-305

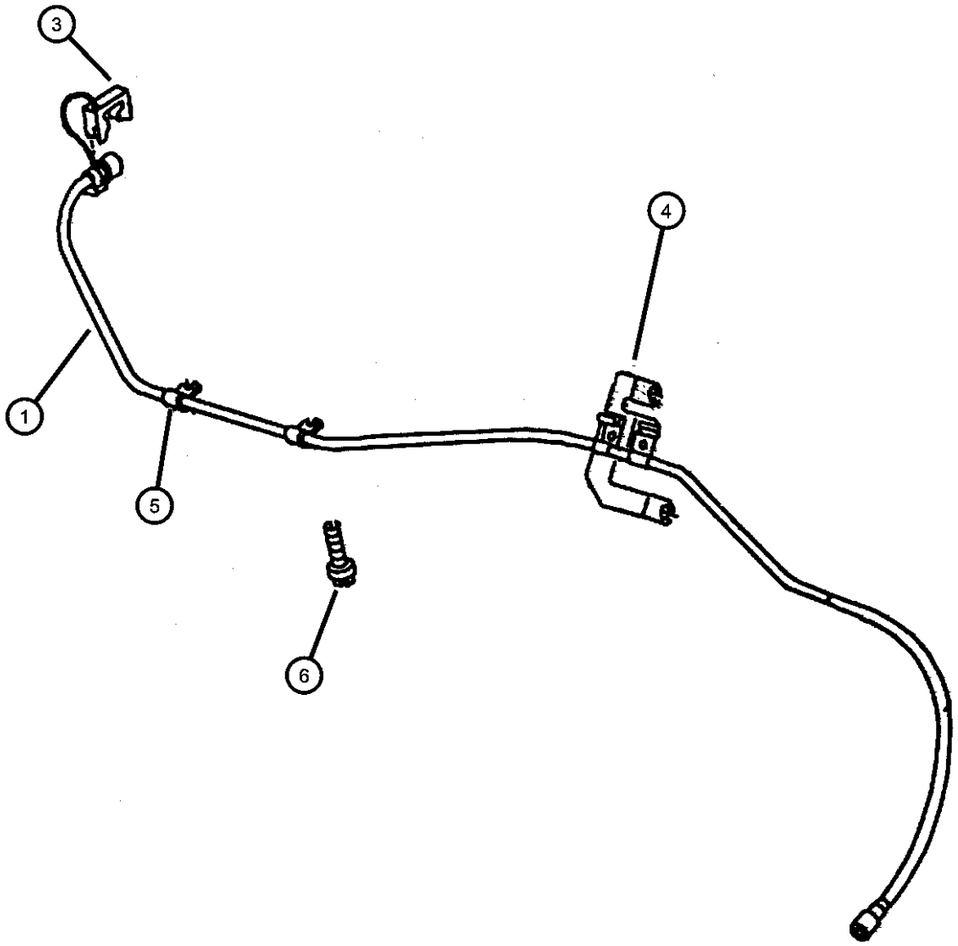

ITEM	PART NUMBER	QTY	LINE	SERIES	BODY	ENGINE	TRANS	TRIM	DESCRIPTION
1									TUBE, Fuel Supply
	52102178AB	1	1		31, 61, 84	EP0			
	52127657AD	1			31, 61, 84	EH0, EM0			
-2	52102506AA	1			31, 61	EV0			TUBE, Fuel
3									CLIP, Fuel Line
	52127788	2				EV0			
		2	1			EP0			
		2				EH0, EM0			
4									BRACKET, Fuel Line
	52018035	1			31, 61, 84	EH0, EM0			
	52127584	1	1			EP0			
5	00120522	2	1		31, 61	EP0			CLIP, Wrap Around
6	06101786	2	1			EP0			SCREW, Self Tapping, M6x1x15

DAKOTA (AN)

SERIES	LINE	BODY	ENGINE	TRANSMISSION
L = Quad Cab L = Regular Cab L = Club Cab	1 = Dakota 2WD 5 = Dakota 4WD	31 = CLUB CAB 2-DR 6.5 FT BOX 61 = REG CAB 6.5 FT BOX 84 = CREW CAB 4-DR W.B.1	EPO = 2.5L 4 Cyl. EHO = 3.9L 6 Cyl. EMO = 5.9L 8 Cyl. EVO = 4.7L Magnum EHC = 3.9L SMPI V6 EML = 5.9L V8 MPI Engine EPE = 2.5L POWER TECH I-4 Cyl. EVA = 4.7L V8 MPI	DDC = TRANSMISSION - 5-SPEED HD MANUAL DG4 = TRANSMISSION-MULTI-SPEED AUTO, 45RFE DGK = TRANSMISSION - 4-SPD. AUTOMATIC,42RE DGT = TRANSMISSION - 4-SPD. AUTOMATIC,46RE DGO = AUTO. TRANS.

Fuel Lines, Rear
Figure 14-310

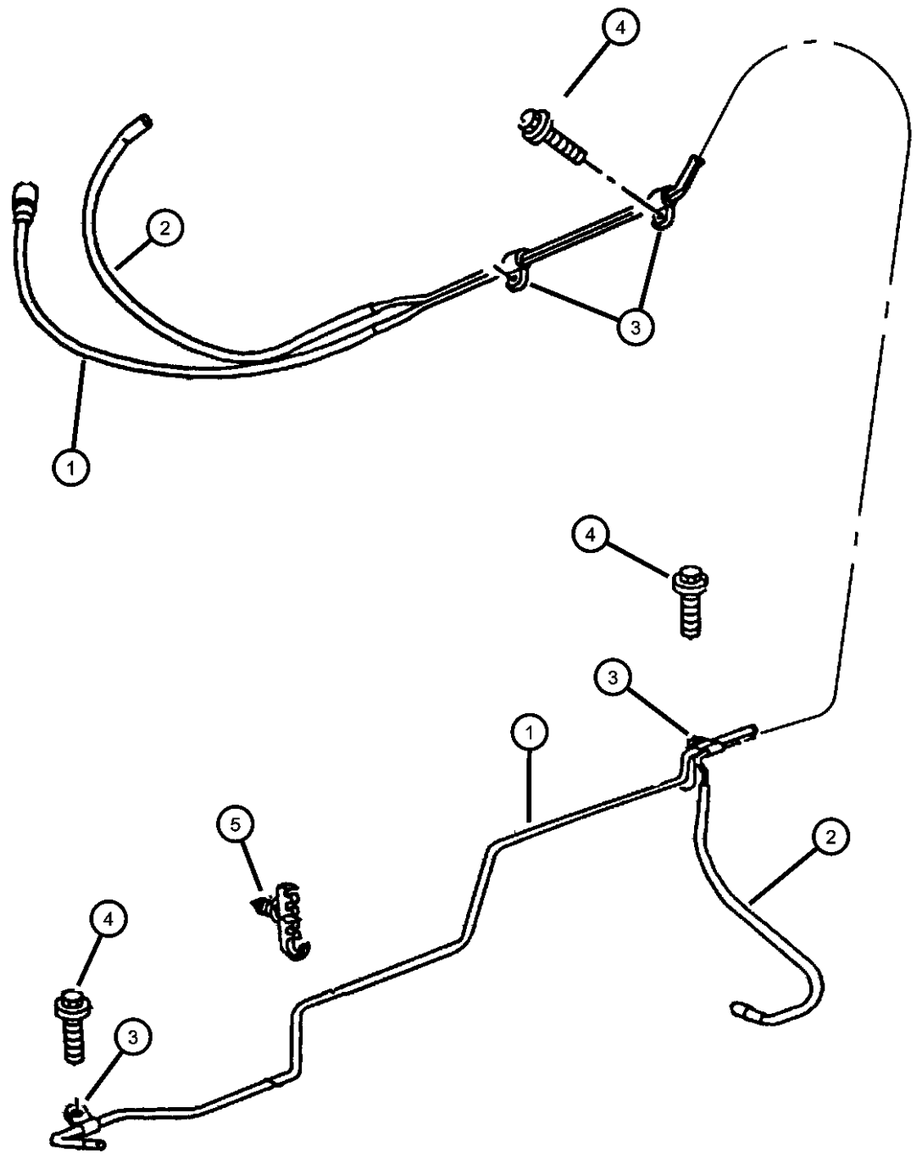

ITEM	PART NUMBER	QTY	LINE	SERIES	BODY	ENGINE	TRANS	TRIM	DESCRIPTION
1									TUBE, Fuel Supply
	52102431AA	1			84				
	52102436AA	1			61				
	52102439AA	1			31				
2									TUBE, Vapor
	52102448AA	1			61				
	52102450AA	1			31				
3									CLIP, Fuel Line
	52102451AA	3			61				
		3			31				
4		3							SCREW, Hex Flange Head, M8x1.25x25.00, (NOT SERVICED)
5	52102304	1							CLIP, 3 Way

DAKOTA (AN)

SERIES	LINE	BODY	ENGINE	TRANSMISSION
L = Quad Cab	1 = Dakota 2WD	31 = CLUB CAB 2-DR 6.5 FT BOX	EPO = 2.5L 4 Cyl.	DDC = TRANSMISSION - 5-SPEED HD MANUAL
L = Regular Cab	5 = Dakota 4WD	61 = REG CAB 6.5 FT BOX	EHO = 3.9L 6 Cyl.	DG4 = TRANSMISSION-MULTI-SPEED AUTO, 45RFE
L = Club Cab		84 = CREW CAB 4-DR W.B.1	EMO = 5.9L 8 Cyl.	DGK = TRANSMISSION - 4-SPD. AUTOMATIC,42RE
			EVO = 4.7L Magnum	DGT = TRANSMISSION - 4-SPD. AUTOMATIC,46RE
			EHC = 3.9L SMPI V6	DGO = AUTO. TRANS.
			EML = 5.9L V8 MPI Engine	
			EPE = 2.5L POWER TECH I-4 Cyl.	
			EVA = 4.7L V8 MPI	

Fuel Rail
Figure 14-410

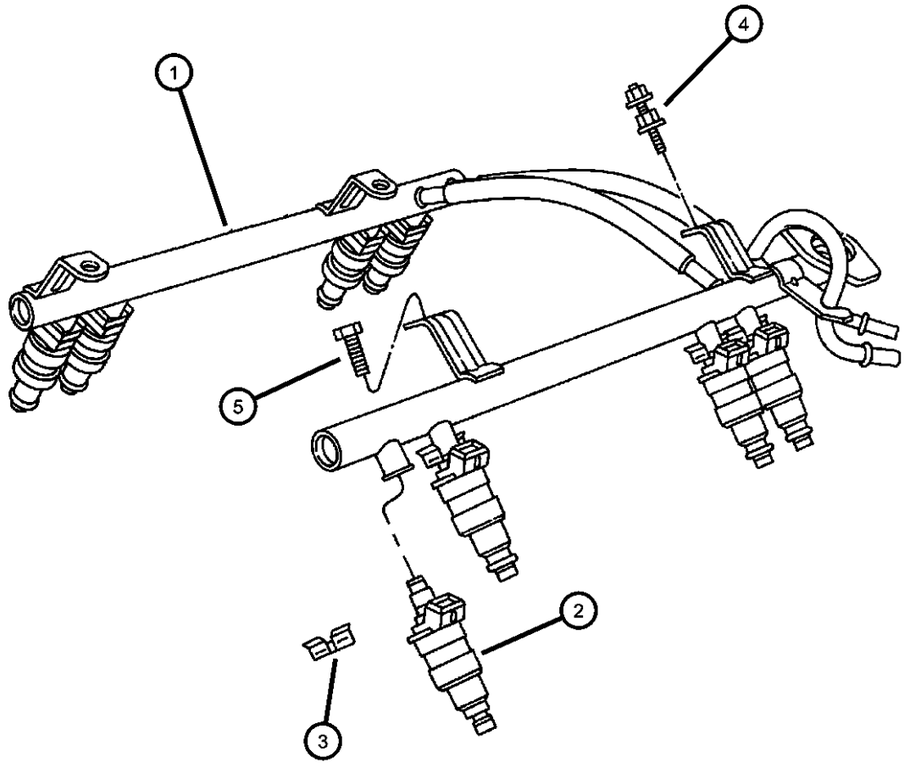

ITEM	PART NUMBER	QTY	LINE	SERIES	BODY	ENGINE	TRANS	TRIM	DESCRIPTION
1									RAIL, Fuel
	05013157AA	1				EP0			
	53030593AB	1				EH0			
	53030598AB	1				EM0			
	53030848	1				EV0			
2									INJECTOR, Fuel
	53030778	4				EP0			
	53030842	8				EV0			
	53031740AA	6				EH0			
	68000872AA								Wholesale Bulk Injector Package - 70 pieces of 53031740AA
		8				EM0			
	68000872AA								Wholesale Bulk Injector Package - 70 pieces of 53031740AA
3									CLIP, Fuel Injector
	04418257	8				EV0			
		4				EP0			
		8				EM0			
		6				EH0			
4	06502086	2				EP0			STUD
5									SCREW, Hex Head, .312-18x.94
	06034549	14				EH0			
		18				EM0			
-6									CAP
	05018781AA	1				EV0			Diagnostic Port
		1				EM0			Diagnostic Port
		1				EP0			Diagnostic Port

DAKOTA (AN)

SERIES	LINE	BODY	ENGINE	TRANSMISSION
L = Quad Cab L = Regular Cab L = Club Cab	1 = Dakota 2WD 5 = Dakota 4WD	31 = CLUB CAB 2-DR 6.5 FT BOX 61 = REG CAB 6.5 FT BOX 84 = CREW CAB 4-DR W.B.1	EPO = 2.5L 4 Cyl. EHO = 3.9L 6 Cyl. EMO = 5.9L 8 Cyl. EVO = 4.7L Magnum EHC = 3.9L SMPI V6 EML = 5.9L V8 MPI Engine EPE = 2.5L POWER TECH I-4 Cyl. EVA = 4.7L V8 MPI	DDC = TRANSMISSION - 5-SPEED HD MANUAL DG4 = TRANSMISSION-MULTI-SPEED AUTO, 45RFE DGK = TRANSMISSION - 4-SPD. AUTOMATIC,42RE DGT = TRANSMISSION - 4-SPD. AUTOMATIC,46RE DGO = AUTO. TRANS.

Fuel Module
Figure 14-510

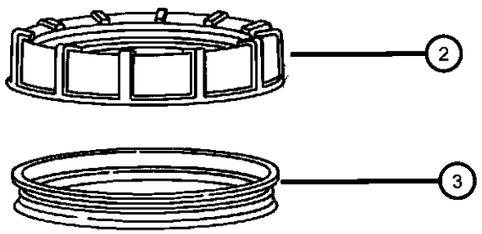

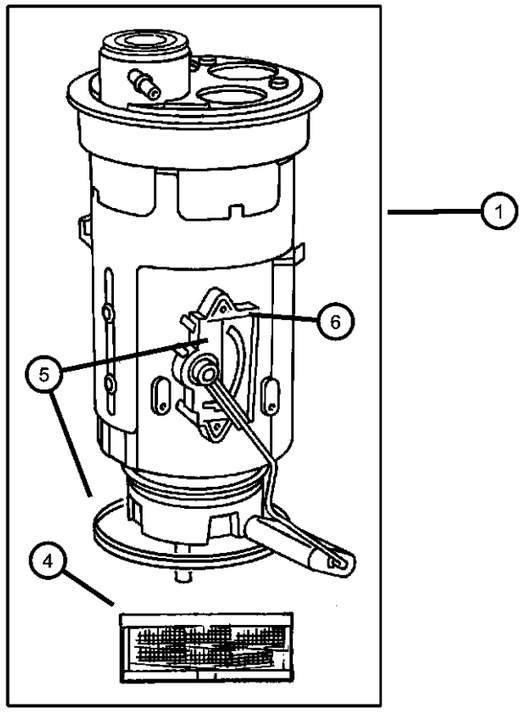

ITEM	PART NUMBER	QTY	LINE	SERIES	BODY	ENGINE	TRANS	TRIM	DESCRIPTION
1									MODULE KIT, Fuel Pump/Level Unit
	05012273AB	1			31, 61				22 Gallon
	05014884AA	1			84				25 Gallon
2									NUT, Fuel Pump Module
	52005389	1			31, 61				22 Gallon
		1			84				24 Gallon
3	52018808	1							SEAL, Fuel Pump and Level Unit
4	52018808	1							FILTER KIT, Fuel, (NOT SERVICED)
5	05014027AA	1			31, 61				LEVEL UNIT KIT, Fuel
6	05016939AA	1			84				LEVEL UNIT, Fuel

DAKOTA (AN)

SERIES	LINE	BODY	ENGINE	TRANSMISSION
L = Quad Cab	1 = Dakota 2WD	31 = CLUB CAB 2-DR 6.5 FT BOX	EPO = 2.5L 4 Cyl.	DDC = TRANSMISSION - 5-SPEED HD MANUAL
L = Regular Cab	5 = Dakota 4WD	61 = REG CAB 6.5 FT BOX	EHO = 3.9L 6 Cyl.	DG4 = TRANSMISSION-MULTI-SPEED AUTO, 45RFE
L = Club Cab		84 = CREW CAB 4-DR W.B.1	EMO = 5.9L 8 Cyl.	DGK = TRANSMISSION - 4-SPD. AUTOMATIC,42RE
			EVO = 4.7L Magnum	DGT = TRANSMISSION - 4-SPD. AUTOMATIC,46RE
			EHC = 3.9L SMPI V6	DGO = AUTO. TRANS.
			EML = 5.9L V8 MPI Engine	
			EPE = 2.5L POWER TECH I-4 Cyl.	
			EVA = 4.7L V8 MPI	

Throttle Body
Figure 14-610

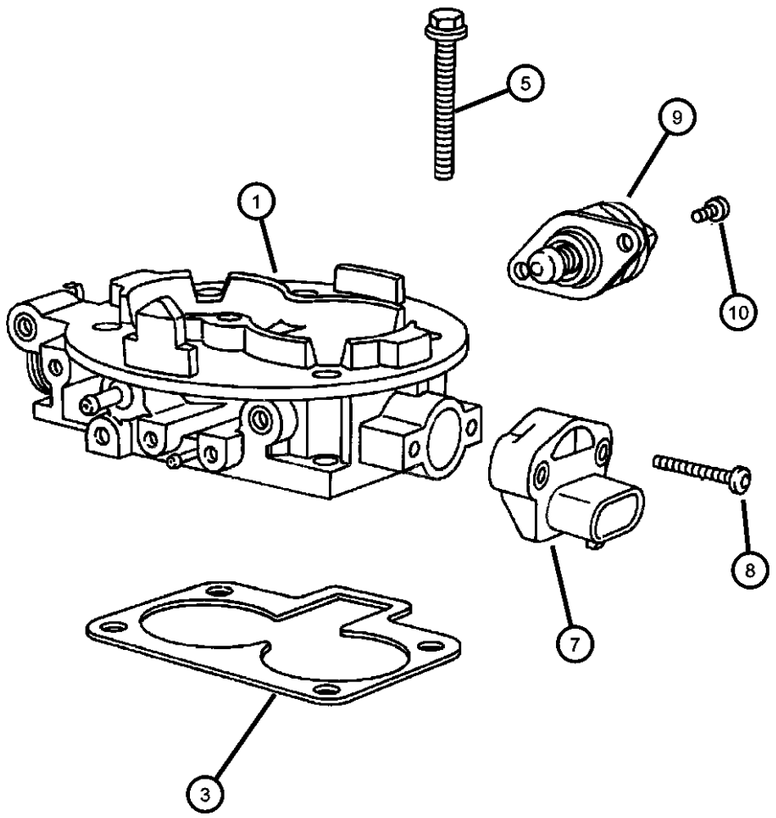

ITEM	PART NUMBER	QTY	LINE	SERIES	BODY	ENGINE	TRANS	TRIM	DESCRIPTION
1									THROTTLE BODY
	53013241AC	1				EV0			
	53031733AA	1				EM0			
	53031806AB	1				EH0			
	53032016AD	1				EP0			
-2	83503642	1				EV0			O RING, Throttle Body
3	53007543	1				EP0			GASKET, Throttle Body
-4									GASKET, Throttle Body To Intake
	53030541	1				EH0			
		1				EM0			
	53030952	1				EV0			
5	06503929	4				EP0			SCREW AND WASHER, Coned Pilot, M6x1x30
-6									SCREW AND WASHER, Hex Head, .312-18x2.38
	06034356	1				EP0			
	06036338AA	4				EH0, EM0			
7									SENSOR, Throttle Position
	04874371AC	1				EP0			
	04882219	1				EM0			
		1				EH0			
		1				EV0			
8	04778462	4				EH0			SCREW, Throttle Position Sensor
9									MOTOR, Air Idle Speed
	04874373AB	1				EP0			
	53030657AC	1				EH0			
		1				EM0			
	53030840	1				EV0			
10									SCREW, A.I.S. Motor
	05003467AA	2				EH0			
		2				EM0			

DAKOTA (AN)

SERIES	LINE	BODY	ENGINE	TRANSMISSION
L = Quad Cab L = Regular Cab L = Club Cab	1 = Dakota 2WD 5 = Dakota 4WD	31 = CLUB CAB 2-DR 6.5 FT BOX 61 = REG CAB 6.5 FT BOX 84 = CREW CAB 4-DR W.B.1	EPO = 2.5L 4 Cyl. EHO = 3.9L 6 Cyl. EMO = 5.9L 8 Cyl. EVO = 4.7L Magnum EHC = 3.9L SMPI V6 EML = 5.9L V8 MPI Engine EPE = 2.5L POWER TECH I-4 Cyl. EVA = 4.7L V8 MPI	DDC = TRANSMISSION - 5-SPEED HD MANUAL DG4 = TRANSMISSION-MULTI-SPEED AUTO, 45RFE DGK = TRANSMISSION - 4-SPD. AUTOMATIC,42RE DGT = TRANSMISSION - 4-SPD. AUTOMATIC,46RE DGO = AUTO. TRANS.

AR = use ase required - = Non illustrrated part

Throttle Controls
Figure 14-710

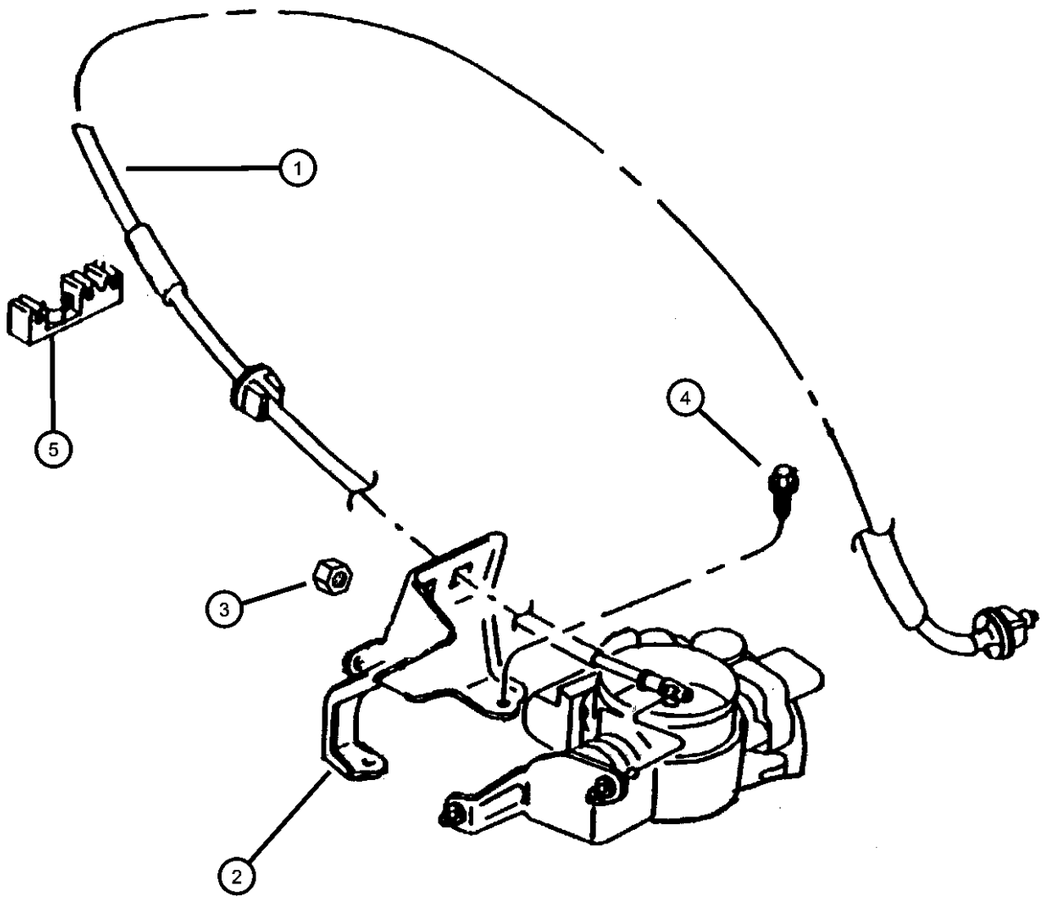

ITEM	PART NUMBER	QTY	LINE	SERIES	BODY	ENGINE	TRANS	TRIM	DESCRIPTION
1	53031715AA	1				EP0			CABLE, Accelerator
2	53007485	1				EP0			BRACKET, Accelerator Cable
3	06100047	1				EP0			NUT AND WASHER, Hex Nut-Coned Washer, M6 x 1.00
4	06501979	2				EP0			SCREW AND WASHER, Hex Head, M6x1x17
5	53007620	1				EP0			GUIDE, Accelerator Cable

DAKOTA (AN)

SERIES	LINE	BODY	ENGINE	TRANSMISSION
L = Quad Cab L = Regular Cab L = Club Cab	1 = Dakota 2WD 5 = Dakota 4WD	31 = CLUB CAB 2-DR 6.5 FT BOX 61 = REG CAB 6.5 FT BOX 84 = CREW CAB 4-DR W.B.1	EPO = 2.5L 4 Cyl. EHO = 3.9L 6 Cyl. EMO = 5.9L 8 Cyl. EVO = 4.7L Magnum EHC = 3.9L SMPI V6 EML = 5.9L V8 MPI Engine EPE = 2.5L POWER TECH I-4 Cyl. EVA = 4.7L V8 MPI	DDC = TRANSMISSION - 5-SPEED HD MANUAL DG4 = TRANSMISSION-MULTI-SPEED AUTO, 45RFE DGK = TRANSMISSION - 4-SPD. AUTOMATIC,42RE DGT = TRANSMISSION - 4-SPD. AUTOMATIC,46RE DGO = AUTO. TRANS.

AR = use ase required - = Non illustrrated part

Throttle Controls
Figure 14-720

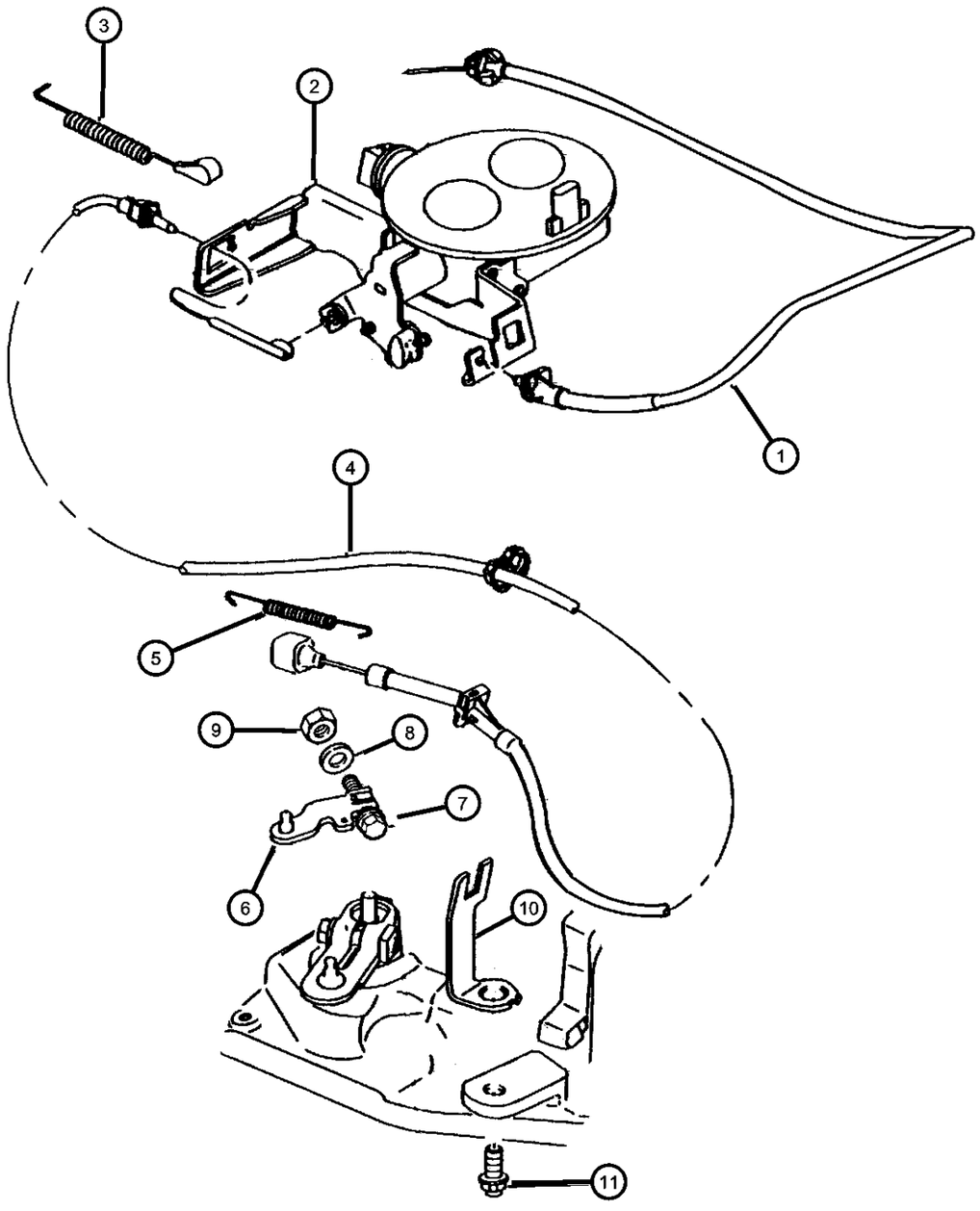

ITEM	PART NUMBER	QTY	LINE	SERIES	BODY	ENGINE	TRANS	TRIM	DESCRIPTION
Note; EHO= All 3.9 Engines, EVO= All 4.7 Engines, EMO= All 5.9 Engines, DBB= Manual Transmissions, DGK= 42RE Automatic Transmissions, DGT= 46RE Automatic Transmissions									
1									CABLE, Accelerator
	53031548AB	1				EH0			
	53031556AB	1				EM0			
	53031592	1				EV0			
2	53031592	1							BRACKET, Throttle Control Cable, Serviced in Throttle Body, (NOT SERVICED)
3	52078102	1				EH0, EM0	DBB		SPRING, Throttle Return
4	52104030AD	1					DGK, DGT		CABLE, Throttle Valve
5	53009055	1					DGK, DGT		SPRING, Throttle Valve Return
6	52079065	1					DGK, DGT		LEVER, Throttle Valve
7	00181065	1					DGK, DGT		BOLT, Hex Head, .25-20x1.00
8	00138165	1					DGK, DGT		WASHER, Lock
9	J0120375	1					DGK, DGT		NUT, Hex, .250-20
10	52079101	1					DGK, DGT		BRACKET, Cable
11	00181112	1					DGK, DGT		SCREW AND WASHER, .375-16x1.00

DAKOTA (AN)

SERIES	LINE	BODY	ENGINE	TRANSMISSION
L = Quad Cab L = Regular Cab L = Club Cab	1 = Dakota 2WD 5 = Dakota 4WD	31 = CLUB CAB 2-DR 6.5 FT BOX 61 = REG CAB 6.5 FT BOX 84 = CREW CAB 4-DR W.B.1	EPO = 2.5L 4 Cyl. EHO = 3.9L 6 Cyl. EMO = 5.9L 8 Cyl. EVO = 4.7L Magnum EHC = 3.9L SMPI V6 EML = 5.9L V8 MPI Engine EPE = 2.5L POWER TECH I-4 Cyl. EVA = 4.7L V8 MPI	DDC = TRANSMISSION - 5-SPEED HD MANUAL DG4 = TRANSMISSION-MULTI-SPEED AUTO, 45RFE DGK = TRANSMISSION - 4-SPD. AUTOMATIC,42RE DGT = TRANSMISSION - 4-SPD. AUTOMATIC,46RE DGO = AUTO. TRANS.

Air Cleaner
Figure 14-815

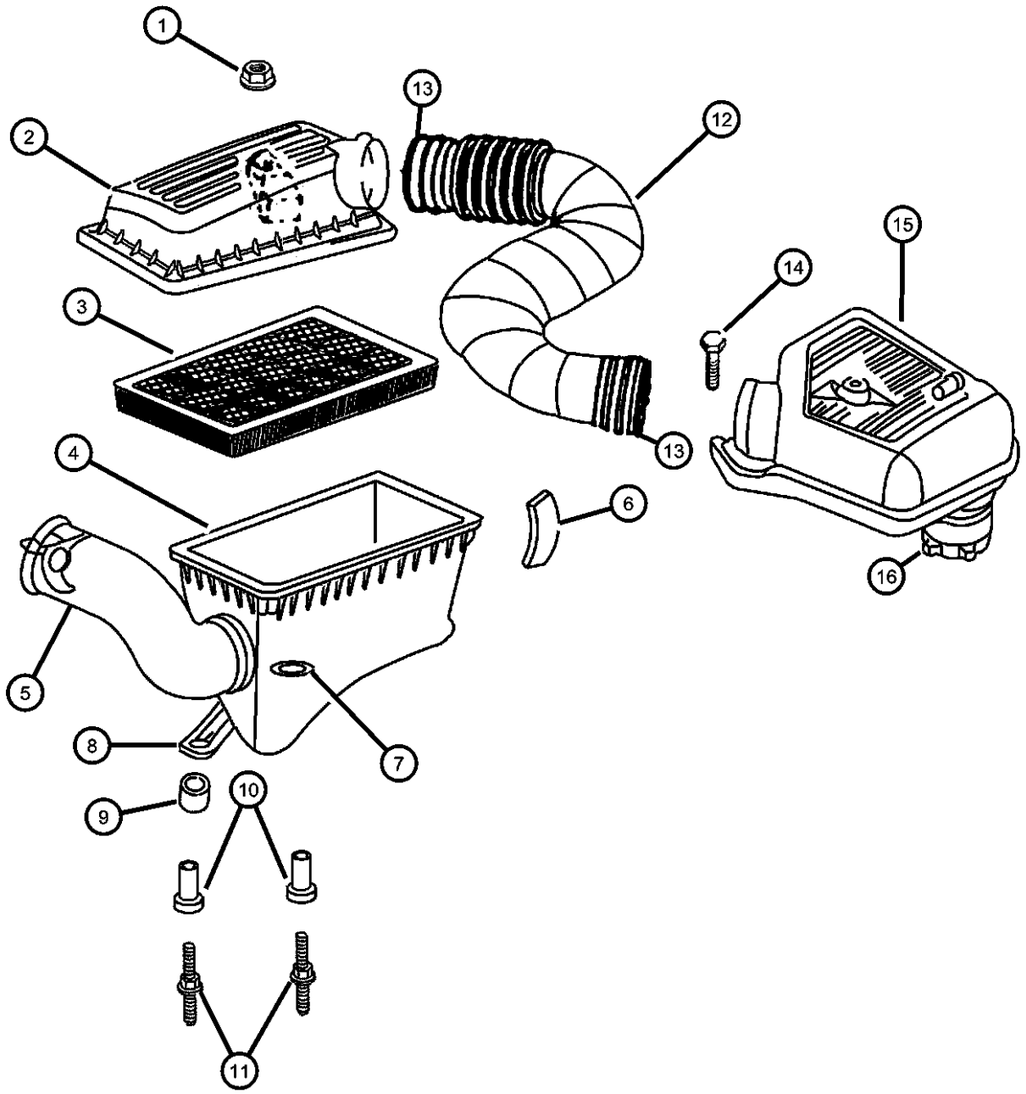

ITEM	PART NUMBER	QTY	LINE	SERIES	BODY	ENGINE	TRANS	TRIM	DESCRIPTION
Note; EPO= All 2.5 Engines, EHO= All 3.9 Engines EVO= All 4.7 Engines, EMO= All 5.9 Engines									
1	34201358	1							NUT AND WASHER, Hex Nut-Sealing Washer, M6 x 1.00
2	53031760AB	1				EH0, EM0, EP0			COVER, Air Cleaner
3	53004383	1				EH0, EM0, EP0			FILTER, Air
	77060008								Performance Cold Air Intake System, AN, 1998-2002, 5.9L
	P4510466								Performance Air Filter, AN, 1999-2002, 4.7L
	P4510467								Performance Air Filter, AN, 1997-1999, 5.2L/5.9L
	P4510468								Performance Air Filter, AN, 2000-2002, 5.9L
	P4510469								Performance Air Filter, BR, 1994-2001, 5.2L/5.9L
	P4510474								Performance Air Filter, XJ, 1991-2001, 4.0L
4	53031770AA	1				EH0, EM0, EP0			BODY, Air Cleaner
5	53031692AA	1				EH0, EM0, EP0			DUCT, Air Cleaner
6	05277576	4				EH0, EM0, EP0			LATCH, Air Cleaner
7	04268295	2				EH0, EM0, EP0			GROMMET, Air Cleaner Bracket
8	04573049	1				EH0, EM0, EP0			ISOLATOR, Air Cleaner Mounting Leg
9	04573211	1				EH0, EM0, EP0			BUSHING, Isolator Mounting Leg
10	53030406	2							FASTENER, Mounting Post
11	06503955	2							STUD, M6x1.00x18
12	53030761	1				EP0			HOSE, Air Cleaner
13	53032087AA	2				EP0			CLAMP, Air Cleaner Duct
14	06504503	2				EP0			SCREW, Hex Flange Head
15	53030759	1				EP0			RESONATOR, Air Cleaner
16	53032086AA	1				EP0			CLAMP

DAKOTA (AN)

SERIES	LINE	BODY	ENGINE	TRANSMISSION
L = Quad Cab L = Regular Cab L = Club Cab	1 = Dakota 2WD 5 = Dakota 4WD	31 = CLUB CAB 2-DR 6.5 FT BOX 61 = REG CAB 6.5 FT BOX 84 = CREW CAB 4-DR W.B.1	EPO = 2.5L 4 Cyl. EHO = 3.9L 6 Cyl. EMO = 5.9L 8 Cyl. EVO = 4.7L Magnum EHC = 3.9L SMPI V6 EML = 5.9L V8 MPI Engine EPE = 2.5L POWER TECH I-4 Cyl. EVA = 4.7L V8 MPI	DDC = TRANSMISSION - 5-SPEED HD MANUAL DG4 = TRANSMISSION-MULTI-SPEED AUTO, 45RFE DGK = TRANSMISSION - 4-SPD. AUTOMATIC,42RE DGT = TRANSMISSION - 4-SPD. AUTOMATIC,46RE DGO = AUTO. TRANS.

Air Cleaner
Figure 14-820

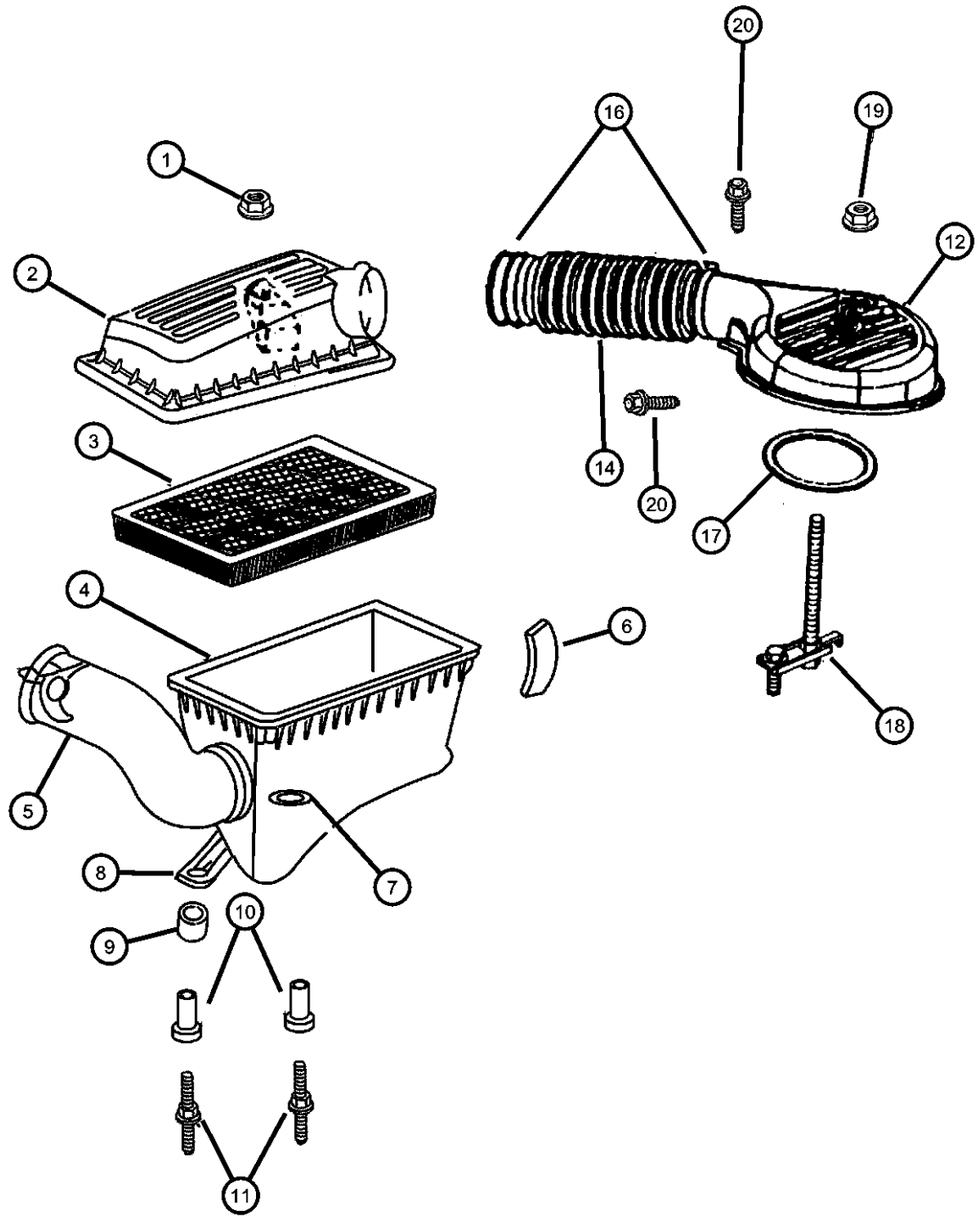

ITEM	PART NUMBER	QTY	LINE	SERIES	BODY	ENGINE	TRANS	TRIM	DESCRIPTION
Note; EPO= All 2.5 Engines, EHO= All 3.9 Engines EVO= All 4.7 Engines, EMO= All 5.9 Engines									
1	34201358	1							NUT AND WASHER, Hex Nut-Sealing Washer, M6 x 1.00
2									COVER, Air Cleaner
	53031760AB	1				EH0, EM0, EP0			
	53031771AA	1				EV0			
3									FILTER, Air
	53004383	1				EH0, EM0, EP0			
	77060008								Performance Cold Air Intake System, AN, 1998-2002, 5.9L
	P4510466								Performance Air Filter, AN, 1999-2002, 4.7L
	P4510467								Performance Air Filter, AN, 1997-1999, 5.2L/5.9L
	P4510468								Performance Air Filter, AN, 2000-2002, 5.9L
	P4510469								Performance Air Filter, BR, 1994-2001, 5.2L/5.9L
	P4510474								Performance Air Filter, XJ, 1991-2001, 4.0L
		1				EV0			
	77060008								Performance Cold Air Intake System, AN, 1998-2002, 5.9L
	P4510466								Performance Air Filter, AN, 1999-2002, 4.7L
	P4510467								Performance Air Filter, AN, 1997-1999, 5.2L/5.9L
	P4510468								Performance Air Filter, AN, 2000-2002, 5.9L
	P4510469								Performance Air Filter, BR, 1994-2001, 5.2L/5.9L
	P4510474								Performance Air Filter, XJ, 1991-2001, 4.0L
4									BODY, Air Cleaner
	53031770AA	1				EH0, EM0, EP0			
		1				EV0			
5									DUCT, Air Cleaner

DAKOTA (AN)

SERIES	LINE	BODY	ENGINE	TRANSMISSION
L = Quad Cab L = Regular Cab L = Club Cab	1 = Dakota 2WD 5 = Dakota 4WD	31 = CLUB CAB 2-DR 6.5 FT BOX 61 = REG CAB 6.5 FT BOX 84 = CREW CAB 4-DR W.B.1	EPO = 2.5L 4 Cyl. EHO = 3.9L 6 Cyl. EMO = 5.9L 8 Cyl. EVO = 4.7L Magnum EHC = 3.9L SMPI V6 EML = 5.9L V8 MPI Engine EPE = 2.5L POWER TECH I-4 Cyl. EVA = 4.7L V8 MPI	DDC = TRANSMISSION - 5-SPEED HD MANUAL DG4 = TRANSMISSION-MULTI-SPEED AUTO, 45RFE DGK = TRANSMISSION - 4-SPD. AUTOMATIC,42RE DGT = TRANSMISSION - 4-SPD. AUTOMATIC,46RE DGO = AUTO. TRANS.

Air Cleaner
Figure 14-820

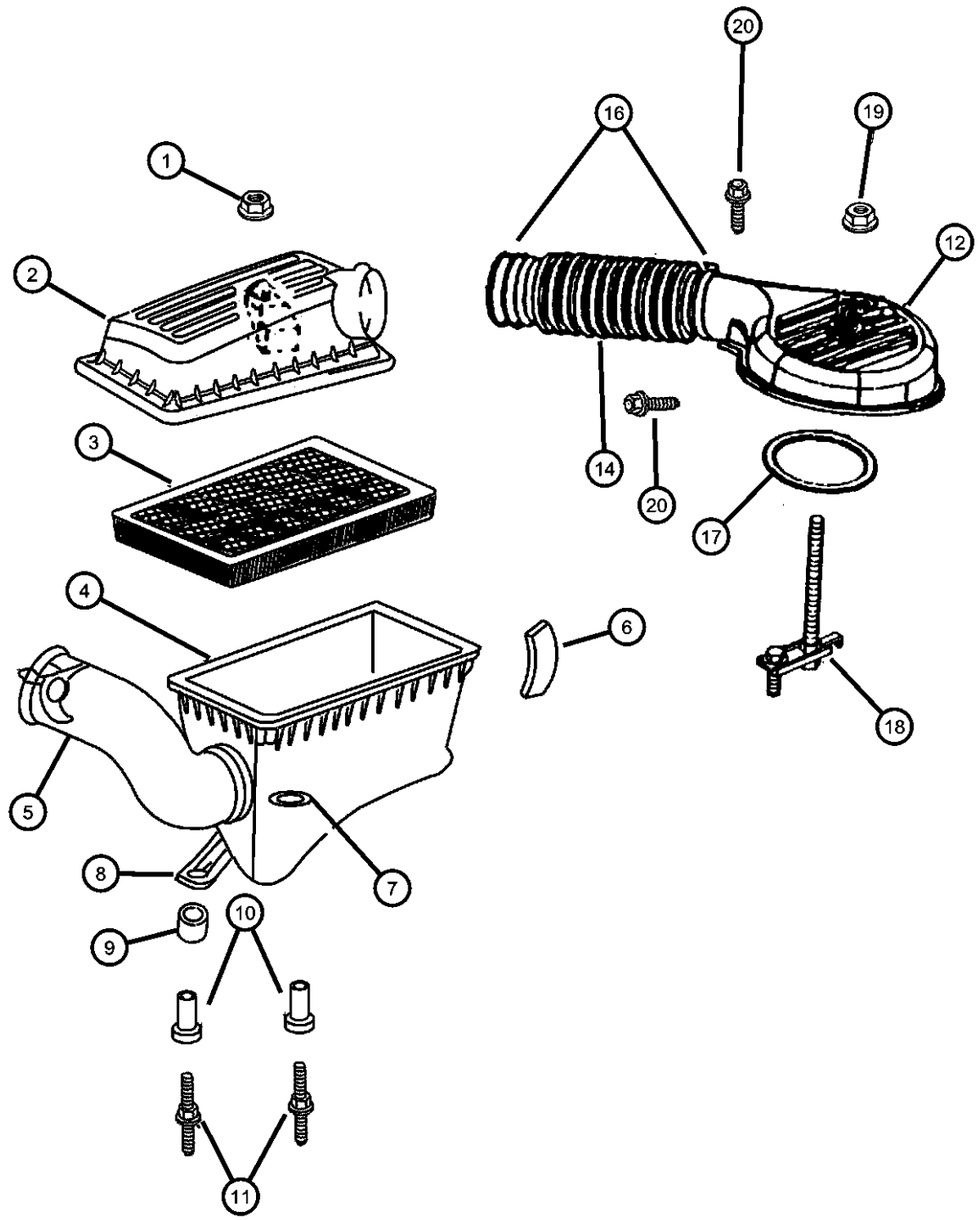

ITEM	PART NUMBER	QTY	LINE	SERIES	BODY	ENGINE	TRANS	TRIM	DESCRIPTION
	53031692AA	1				EH0, EM0, EP0			
		1				EV0			
6									LATCH, Air Cleaner
	05277576	4				EH0, EM0, EP0			
		4				EV0			
7									GROMMET, Air Cleaner Bracket
	04268295	2				EH0, EM0, EP0			
		2				EV0			
8									ISOLATOR, Air Cleaner Mounting Leg
	04573049	1				EH0, EM0, EP0			
		1				EV0			
9									BUSHING, Isolator Mounting Leg
	04573211	1				EH0, EM0, EP0			
		1				EV0			
10	53030406	2							FASTENER, Mounting Post
11	06503955	2							STUD, M6x1.00x18
12	04883598AA	1				EH0, EM0			BONNET, Throttle Body Air Inlet
-13	53032084AA	1				EV0			RESONATOR, Air Cleaner
14	04883599AA	1				EH0, EM0			HOSE, Air Cleaner to T/Body
-15	53032083AA	1				EV0			HOSE, Air Cleaner
16	53032088AA	2				EH0, EM0			CLAMP, Air Cleaner Duct
17	53030600	1				EH0, EM0			GASKET, Air Cleaner To T/Body
18	53031572AB	1				EH0, EM0			BRACKET, Air Cleaner
19	06504488	1				EH0, EM0			NUT, .25-20
20	06504488	1							SCREW, M6x1.00x35.00, (NOT SERVICED)

DAKOTA (AN)

SERIES	LINE	BODY	ENGINE	TRANSMISSION
L = Quad Cab L = Regular Cab L = Club Cab	1 = Dakota 2WD 5 = Dakota 4WD	31 = CLUB CAB 2-DR 6.5 FT BOX 61 = REG CAB 6.5 FT BOX 84 = CREW CAB 4-DR W.B.1	EPO = 2.5L 4 Cyl. EHO = 3.9L 6 Cyl. EMO = 5.9L 8 Cyl. EVO = 4.7L Magnum EHC = 3.9L SMPI V6 EML = 5.9L V8 MPI Engine EPE = 2.5L POWER TECH I-4 Cyl. EVA = 4.7L V8 MPI	DDC = TRANSMISSION - 5-SPEED HD MANUAL DG4 = TRANSMISSION-MULTI-SPEED AUTO, 45RFE DGK = TRANSMISSION - 4-SPD. AUTOMATIC,42RE DGT = TRANSMISSION - 4-SPD. AUTOMATIC,46RE DGO = AUTO. TRANS.

Speed Control
Figure 14-1010

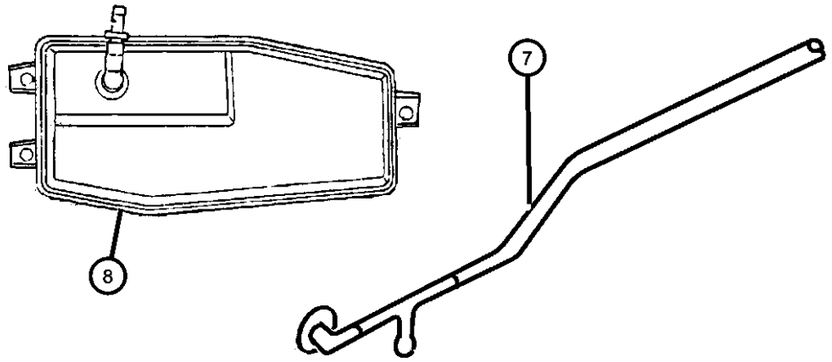

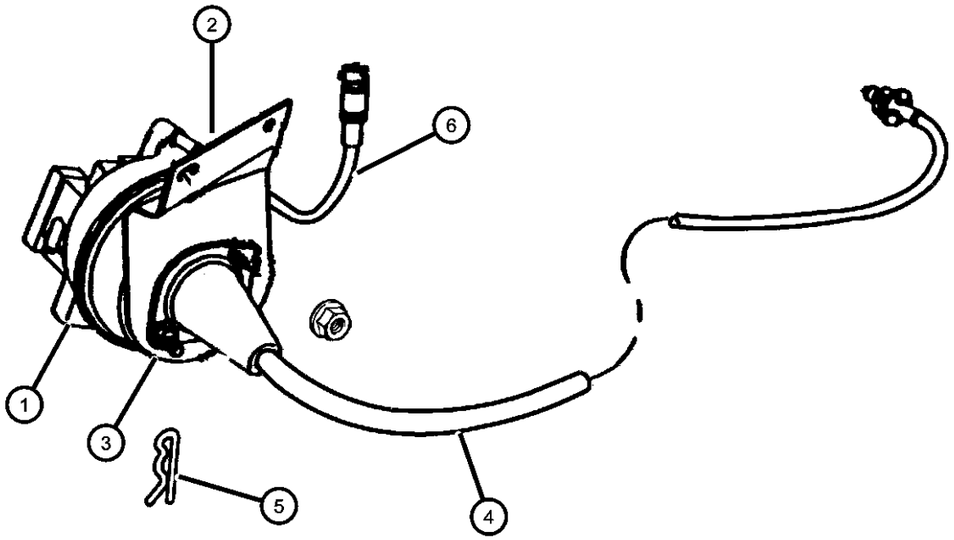

ITEM	PART NUMBER	QTY	LINE	SERIES	BODY	ENGINE	TRANS	TRIM	DESCRIPTION
Note; EHO= All 3.9 Engines, EVO= All 4.7 Engines EMO= All 5.9 Engines									
1									SERVO, Speed Control
	04669977	1				EM0			
		1				EV0			
		1				EH0			
2									BRACKET, Cruise Control Servo
	05015843AA	1				EM0			
		1				EV0			
		1				EH0			
3									LOCK NUT, M6x1.0x6
	06500274	2				EM0			
		2				EV0			
		2				EH0			
4									CABLE, Speed Control
	05015853AA	1				EM0			
	05015856AA	1				EH0			
	05015857AB	1				EV0			
5									CLIP, Cable to Servo Attach
	06025867	1				EM0			
		1				EV0			
		1				EH0			
6									HARNESS, Speed Control Vacuum
	05015845AA	1				EM0			
		1				EH0			
	05015846AA	1				EV0			
7	55055908AC	1							HARNESS, Vacuum
8	04886009AA	1							RESERVOIR, Vacuum

DAKOTA (AN)

SERIES	LINE	BODY	ENGINE	TRANSMISSION
L = Quad Cab L = Regular Cab L = Club Cab	1 = Dakota 2WD 5 = Dakota 4WD	31 = CLUB CAB 2-DR 6.5 FT BOX 61 = REG CAB 6.5 FT BOX 84 = CREW CAB 4-DR W.B.1	EPO = 2.5L 4 Cyl. EHO = 3.9L 6 Cyl. EMO = 5.9L 8 Cyl. EVO = 4.7L Magnum EHC = 3.9L SMPI V6 EML = 5.9L V8 MPI Engine EPE = 2.5L POWER TECH I-4 Cyl. EVA = 4.7L V8 MPI	DDC = TRANSMISSION - 5-SPEED HD MANUAL DG4 = TRANSMISSION-MULTI-SPEED AUTO, 45RFE DGK = TRANSMISSION - 4-SPD. AUTOMATIC,42RE DGT = TRANSMISSION - 4-SPD. AUTOMATIC,46RE DGO = AUTO. TRANS.

Accelerator Pedal
Figure 14-1110

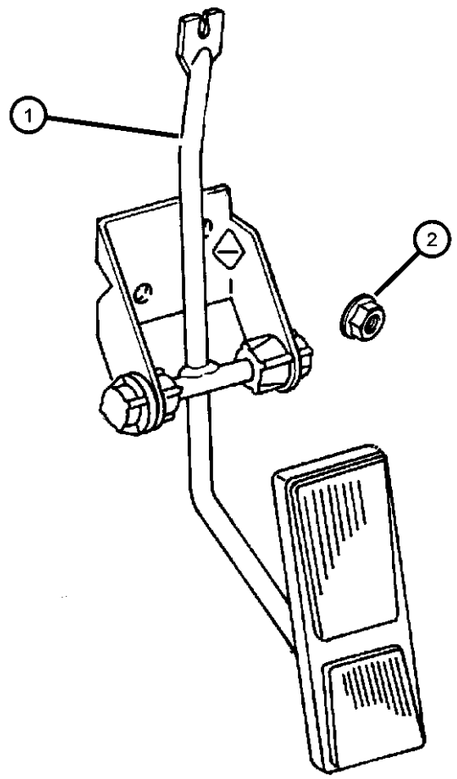

ITEM	PART NUMBER	QTY	LINE	SERIES	BODY	ENGINE	TRANS	TRIM	DESCRIPTION
1	52079304AC	1							PEDAL, Accelerator
2	06502843	2							NUT AND WASHER, Hex Nut-Coned Washer, M6 x 1.00

DAKOTA (AN)

SERIES	LINE	BODY	ENGINE	TRANSMISSION
L = Quad Cab L = Regular Cab L = Club Cab	1 = Dakota 2WD 5 = Dakota 4WD	31 = CLUB CAB 2-DR 6.5 FT BOX 61 = REG CAB 6.5 FT BOX 84 = CREW CAB 4-DR W.B.1	EPO = 2.5L 4 Cyl. EHO = 3.9L 6 Cyl. EMO = 5.9L 8 Cyl. EVO = 4.7L Magnum EHC = 3.9L SMPI V6 EML = 5.9L V8 MPI Engine EPE = 2.5L POWER TECH I-4 Cyl. EVA = 4.7L V8 MPI	DDC = TRANSMISSION - 5-SPEED HD MANUAL DG4 = TRANSMISSION-MULTI-SPEED AUTO, 45RFE DGK = TRANSMISSION - 4-SPD. AUTOMATIC,42RE DGT = TRANSMISSION - 4-SPD. AUTOMATIC,46RE DGO = AUTO. TRANS.

Group - 16

Propeller Shafts and U-Joints

016-100 Propeller Shaft 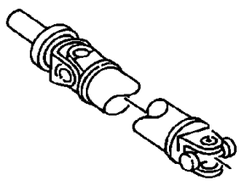			

Group - 16 Propeller Shafts and U-Joints

Illustration Title — Group-Fig. No.

Propeller Shaft

Shaft,Propeller,Rear,1 Piece-AN 1 ..... Fig. 16 - 110
Shaft,Propeller,Rear,2 Piece-AN 1 ..... Fig. 16 - 120
Shaft,Propeller,Front and Rear-AN 5 ..... Fig. 16 - 130

Shaft,Propeller,Rear,1 Piece-AN 1
Figure 16-110

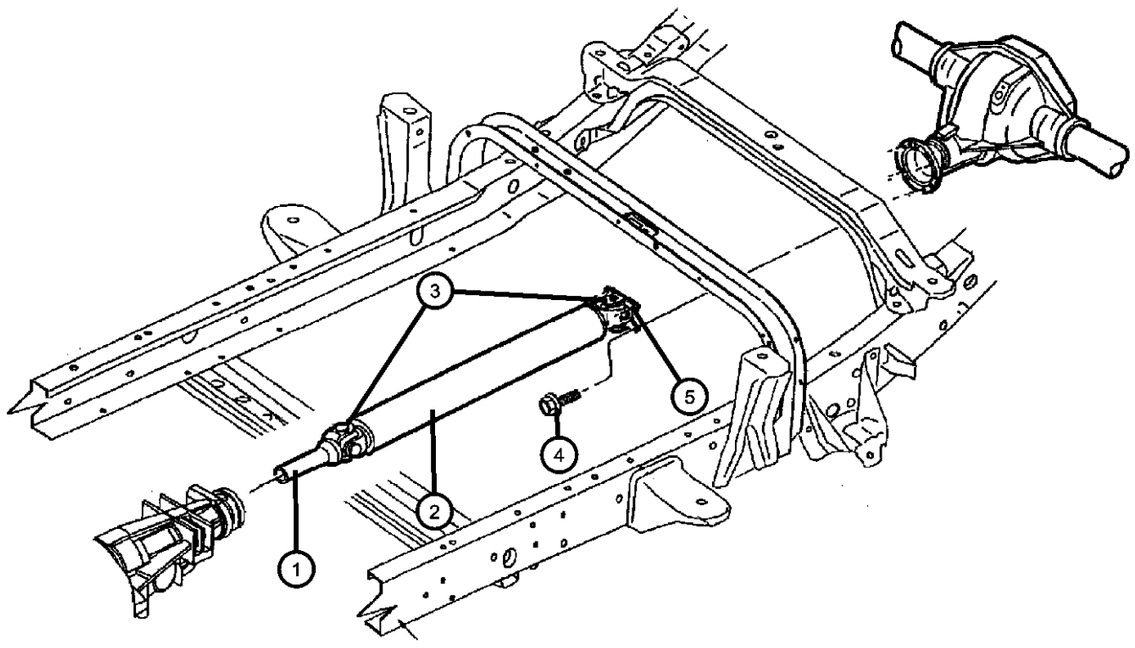

ITEM	PART NUMBER	QTY	LINE	SERIES	BODY	ENGINE	TRANS	TRIM	DESCRIPTION
Note:EP0=All 2.5L 4 Cylinder Gas—EH0=All 3.9L 6 Cylinder Gas—EM0=All 5.9L 8 Cylinder Gas—EV0=All 4.7L 8 Cylinder Gas—DG0= All Autom									
1									YOKE, Drive Shaft
	05003633AA	1	1		31, 84	EM0	DGT		with Shaft 52105950AB
		1	1		31, 84	EH0, EV0	DG0		with Shaft 52105603AA
		1	1		31, 84	EM0	DGT		with Shaft 52105950AC
	05014040AA	1	1		61	EH0, EM0, EV0	DG0		with Shaft 52105600AA
	05014041AA	1	1		61	EH0, EV0	DDC		with Shaft 52105602AA
	05014058AA	1	1		61	EP0	DDK		with Shaft 52105607AA
2									SHAFT, Drive
	52105600AA	1	1		61	EH0, EM0, EV0	DG0		
	52105602AA	1	1		61	EH0, EV0	DDC		
	52105603AA	1	1		31, 84	EH0, EV0	DG0		
	52105607AA	1	1		61	EP0	DDK		
	52105950AB	1	1		31, 84	EM0	DGT		Use with Transmission 52119847AA and Overdrive 52118784AA ONLY!
	52105950AC	1	1		31, 84	EM0	DGT		Use with Transmission 52119949AA and Overdrive 52119428AA ONLY!
3									U-JOINT
	05014733AA	2	1		61	EH0, EM0, EV0	DG0		with Shaft 52105600AA
	V8014733AA								Mopar Alternative Universal Joint
		2	1		61	EH0, EV0	DDC		with Shaft 52105602AA
	V8014733AA								Mopar Alternative Universal Joint
		2	1		61	EP0	DDK		with Shaft 52105607AA
	V8014733AA								Mopar Alternative Universal Joint
		2	1		31, 84	EM0	DGT		with Shaft 52105950AB
	V8014733AA								Mopar Alternative Universal Joint
		2	1		31, 84	EH0, EV0	DG0		with Shaft 52105603AA
	V8014733AA								Mopar Alternative Universal Joint
		2	1		31, 84	EM0	DGT		with Shaft 52105950AC
	V8014733AA								Mopar Alternative Universal Joint

DAKOTA (AN)

SERIES	LINE	BODY	ENGINE	TRANSMISSION
L = Quad Cab L = Regular Cab L = Club Cab	1 = Dakota 2WD 5 = Dakota 4WD	31 = CLUB CAB 2-DR 6.5 FT BOX 61 = REG CAB 6.5 FT BOX 84 = CREW CAB 4-DR W.B.1	EPO = 2.5L 4 Cyl. EHO = 3.9L 6 Cyl. EMO = 5.9L 8 Cyl. EVO = 4.7L Magnum EHC = 3.9L SMPI V6 EML = 5.9L V8 MPI Engine EPE = 2.5L POWER TECH I-4 Cyl. EVA = 4.7L V8 MPI	DDC = TRANSMISSION - 5-SPEED HD MANUAL DG4 = TRANSMISSION-MULTI-SPEED AUTO, 45RFE DGK = TRANSMISSION - 4-SPD. AUTOMATIC,42RE DGT = TRANSMISSION - 4-SPD. AUTOMATIC,46RE DGO = AUTO. TRANS.

AR = use ase required - = Non illustrrated part

Shaft,Propeller,Rear,1 Piece-AN 1
Figure 16-110

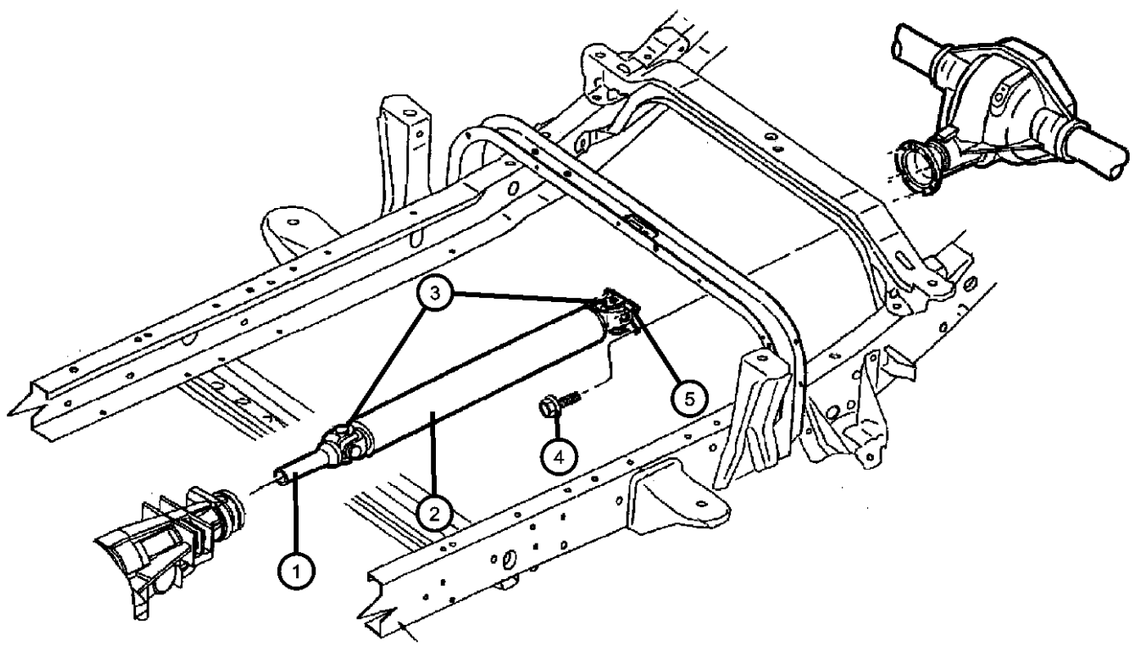

ITEM	PART NUMBER	QTY	LINE	SERIES	BODY	ENGINE	TRANS	TRIM	DESCRIPTION
4	06506233AA	4	5		31, 61, 84				BOLT, Hex Head, M12, Flange to Rear Axle Yoke
5									FLANGE, Driveshaft Yoke
	05015556AA	1	1		61	EH0, EM0, EV0	DG0		with Shaft 52105600AA, Rear
		1	1		61	EP0	DDK		with Shaft 52105607AA, Rear
		1	1		61	EH0, EV0	DDC		with Shaft 52105602AA, Rear
		1	1		31, 84	EH0, EV0	DG0		with Shaft 52105603AA, Rear
		1	1		31, 84	EM0	DGT		with Shaft 52105950AB, Rear
		1	1		31, 84	EM0	DGT		with Shaft 52105950AC, Rear

DAKOTA (AN)

SERIES	LINE	BODY	ENGINE	TRANSMISSION
L = Quad Cab	1 = Dakota 2WD	31 = CLUB CAB 2-DR 6.5 FT BOX	EPO = 2.5L 4 Cyl.	DDC = TRANSMISSION - 5-SPEED HD MANUAL
L = Regular Cab	5 = Dakota 4WD	61 = REG CAB 6.5 FT BOX	EHO = 3.9L 6 Cyl.	DG4 = TRANSMISSION-MULTI-SPEED AUTO, 45RFE
L = Club Cab		84 = CREW CAB 4-DR W.B.1	EMO = 5.9L 8 Cyl.	DGK = TRANSMISSION - 4-SPD. AUTOMATIC,42RE
			EVO = 4.7L Magnum	DGT = TRANSMISSION - 4-SPD. AUTOMATIC,46RE
			EHC = 3.9L SMPI V6	DGO = AUTO. TRANS.
			EML = 5.9L V8 MPI Engine	
			EPE = 2.5L POWER TECH I-4 Cyl.	
			EVA = 4.7L V8 MPI	

Shaft,Propeller,Rear,2 Piece-AN 1
Figure 16-120

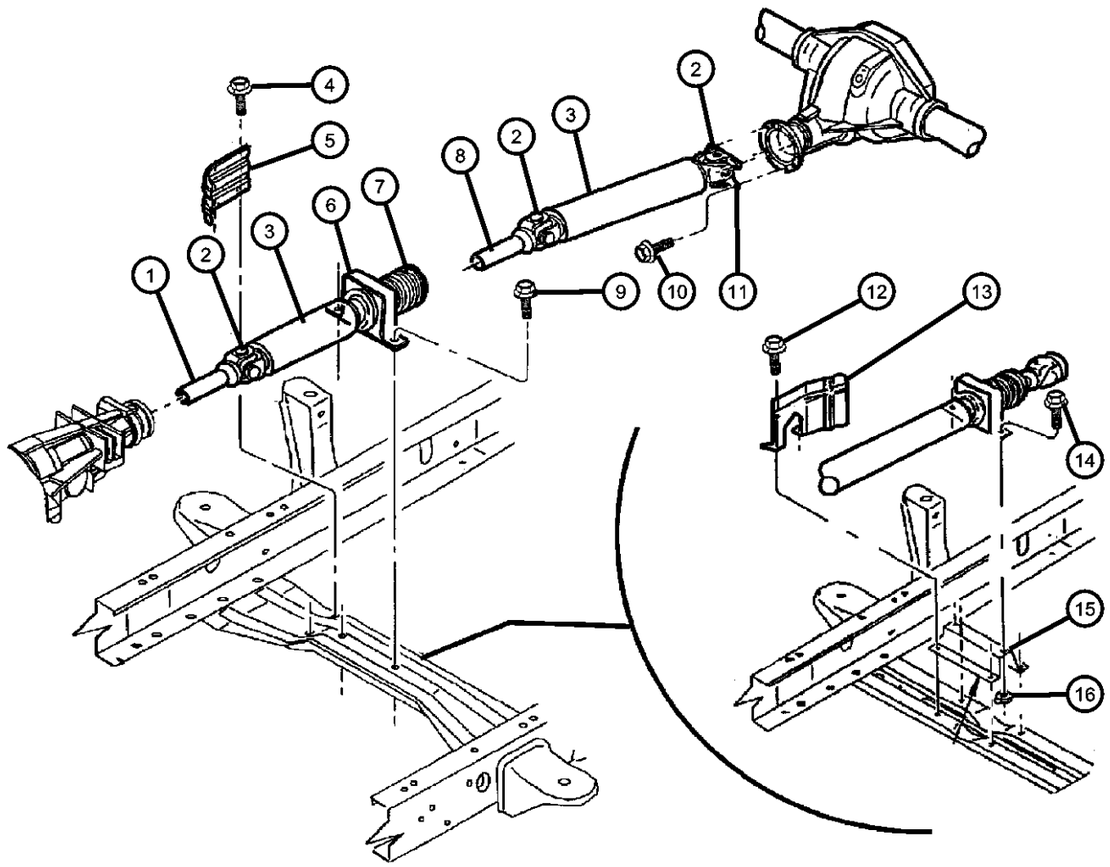

ITEM	PART NUMBER	QTY	LINE	SERIES	BODY	ENGINE	TRANS	TRIM	DESCRIPTION
Note:EP0=All 2.5L 4 Cylinder Gas—EH0=All 3.9L 6 Cylinder Gas—EV0=All 4.7L 8 Cylinder Gas—DBB=All Manual Transmissions—DDC,DDK=5									
1									YOKE, Drive Shaft
	05014041AA	1	1		31, 84	EH0, EV0	DDC		with Shaft 52105404AA
	05014058AA	1	1		31, 84	EP0	DDK		with Shaft 52105606AA
2									U-JOINT
	05014733AA	3	1		31, 84	EP0	DDK		with Shaft 52105606AA
	V8014733AA								Mopar Alternative Universal Joint
		3	1		31, 84	EH0, EV0	DDC		with Shaft 52105404AA
	V8014733AA								Mopar Alternative Universal Joint
3									SHAFT, Drive, 2 Piece
	52105404AA	1	1		31, 84	EH0, EV0	DDC		Complete-with Center Bearing
	52105606AA	1	1		31, 84	EP0	DDK		Complete-with Center Bearing
4	06101787	2	1		31		DBB		SCREW, Tapping, M8x20, Heat Shield Mounting
5	52019569	1	1		31	EH0, EP0	DBB		SHIELD, Heat
6									CENTER BEARING, Drive Shaft
	05014097AA	1	1		31, 84	EH0, EV0	DDC		with Shaft 52105404AA
		1	1		31, 84	EP0	DDK		with Shaft 52105606AA
7									BOOT, Driveshaft
	05012793AA	1	1		31, 84	EH0, EV0	DDC		with Shaft 52105404AA
		1	1		31, 84	EP0	DDK		with Shaft 52105606AA
8									YOKE, Drive Shaft
	05014041AA	1	1		31, 84	EH0, EV0	DDC		with Shaft 52105404AA
	05014056AA	1	1		31, 84	EP0	DDK		with Shaft 52105606AA
9	06101063	2	1		31		DBB		SCREW AND WASHER, M10x1.5x45, Center Bearing Mounting
10	06506497AA	4							BOLT, Hex Head, M12, Drive Shaft Flange to Rear Axle Flange
11									FLANGE, Driveshaft Yoke
	05015556AA	1	1		31, 84	EP0	DDK		with Shaft 52105606AA, Rear
		1	1		31, 84	EH0, EV0	DDC		with Shaft 52105404AA,
12	52105387AA	1	1		84		DBB		SHIELD, Center Bearing, Heat
13	06101063	4	1		84		DBB		SCREW AND WASHER, M10x1.5x45, Heat Shield Mounting

DAKOTA (AN)

SERIES	LINE	BODY	ENGINE	TRANSMISSION
L = Quad Cab L = Regular Cab L = Club Cab	1 = Dakota 2WD 5 = Dakota 4WD	31 = CLUB CAB 2-DR 6.5 FT BOX 61 = REG CAB 6.5 FT BOX 84 = CREW CAB 4-DR W.B.1	EPO = 2.5L 4 Cyl. EHO = 3.9L 6 Cyl. EMO = 5.9L 8 Cyl. EVO = 4.7L Magnum EHC = 3.9L SMPI V6 EML = 5.9L V8 MPI Engine EPE = 2.5L POWER TECH I-4 Cyl. EVA = 4.7L V8 MPI	DDC = TRANSMISSION - 5-SPEED HD MANUAL DG4 = TRANSMISSION-MULTI-SPEED AUTO, 45RFE DGK = TRANSMISSION - 4-SPD. AUTOMATIC,42RE DGT = TRANSMISSION - 4-SPD. AUTOMATIC,46RE DGO = AUTO. TRANS.

Shaft,Propeller,Rear,2 Piece-AN 1
Figure 16-120

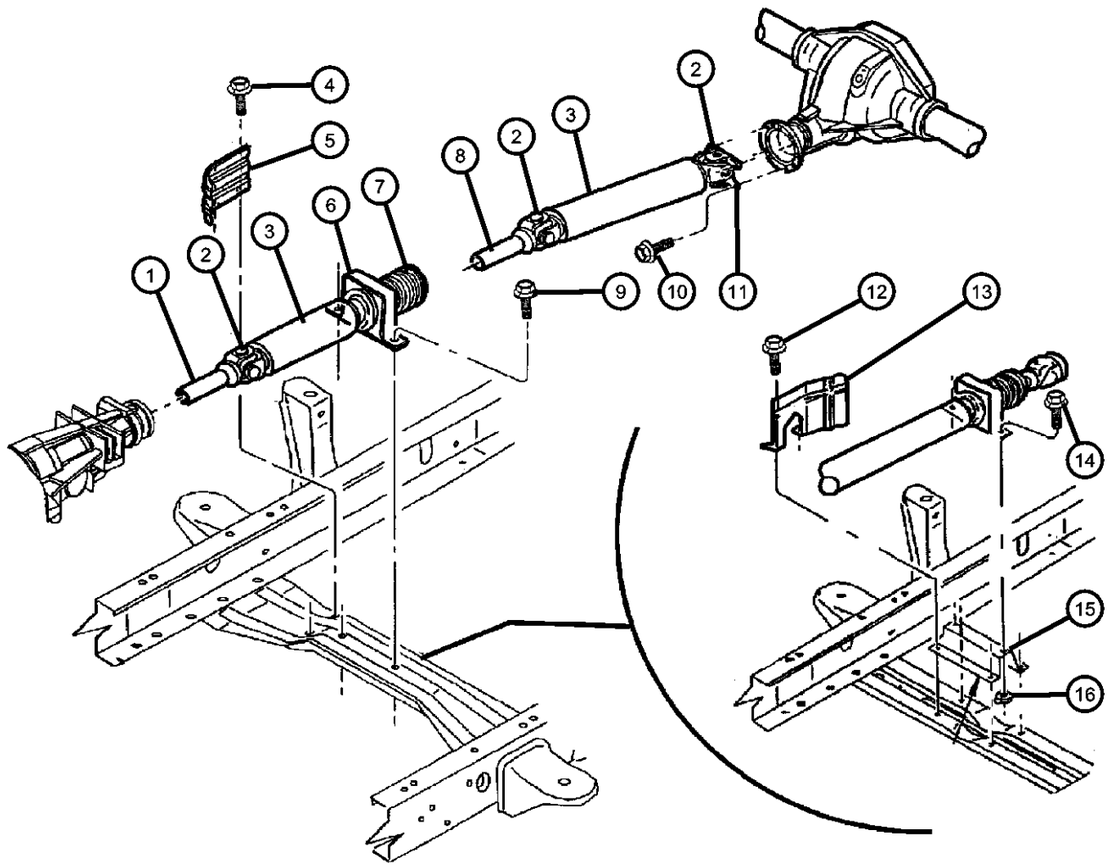

ITEM	PART NUMBER	QTY	LINE	SERIES	BODY	ENGINE	TRANS	TRIM	DESCRIPTION
14	06101060	2	1		84		DBB		SCREW AND WASHER, Hex Head, M10x1.5x30, Center Bearing Mounting
15	52105388AA	1	1		84		DBB		BRACKET, Drive Shaft Bearing, Center Bearing Mounting
16	06101696	2	1		84		DBB		NUT, Center Bearing Mounting

DAKOTA (AN)

SERIES	LINE	BODY	ENGINE	TRANSMISSION
L = Quad Cab L = Regular Cab L = Club Cab	1 = Dakota 2WD 5 = Dakota 4WD	31 = CLUB CAB 2-DR 6.5 FT BOX 61 = REG CAB 6.5 FT BOX 84 = CREW CAB 4-DR W.B.1	EPO = 2.5L 4 Cyl. EHO = 3.9L 6 Cyl. EMO = 5.9L 8 Cyl. EVO = 4.7L Magnum EHC = 3.9L SMPI V6 EML = 5.9L V8 MPI Engine EPE = 2.5L POWER TECH I-4 Cyl. EVA = 4.7L V8 MPI	DDC = TRANSMISSION - 5-SPEED HD MANUAL DG4 = TRANSMISSION-MULTI-SPEED AUTO, 45RFE DGK = TRANSMISSION - 4-SPD. AUTOMATIC,42RE DGT = TRANSMISSION - 4-SPD. AUTOMATIC,46RE DGO = AUTO. TRANS.

Shaft,Propeller,Front and Rear-AN 5
Figure 16-130

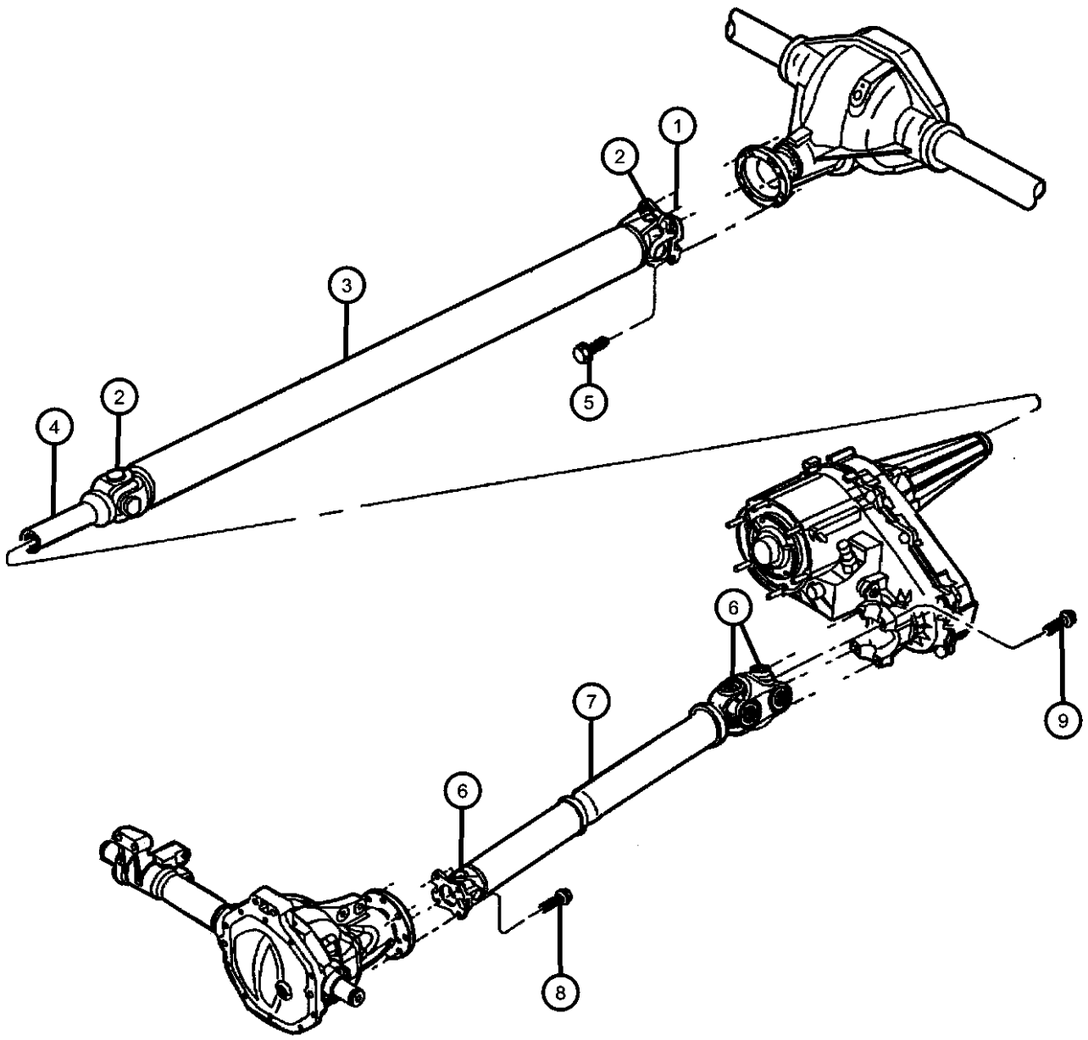

ITEM	PART NUMBER	QTY	LINE	SERIES	BODY	ENGINE	TRANS	TRIM	DESCRIPTION
Note:Sales Codes defined below; DG0=Transmissions - All Automatics EM0= Engines - All 5.9L 8 Cylinder Gas EV0= Engines - All 4.7L Gas									
1									FLANGE, Driveshaft Yoke
	05015556AA	1	5		61	EH0, EM0, EV0	DG0		Rear
		1	5		61	EH0, EV0	DDC		Rear
		1	5		31, 84	EH0, EM0, EV0	DG0		Rear
		1	5		31, 84	EH0, EV0	DDC		Rear
2									U-JOINT
	05014733AA	2	5		31, 84	EH0, EM0, EV0	DG0		Front or Rear
	V8014733AA								Mopar Alternative Universal Joint
		2	5		61	EH0, EM0, EV0	DG0		Front or Rear
	V8014733AA								Mopar Alternative Universal Joint
		2	5		61	EH0, EV0	DDC		Front or Rear
	V8014733AA								Mopar Alternative Universal Joint
		2	5		31, 84	EH0, EV0	DDC		Front or Rear
	V8014733AA								Mopar Alternative Universal Joint
3									SHAFT, Drive
	52105592AA	1	5		61	EH0, EM0, EV0	DG0		Rear
	52105598AA	1	5		31, 84	EH0, EM0, EV0	DG0		Rear
	52105599AA	1	5		61	EH0, EV0	DDC		Rear
	52105611AA	1	5		31, 84	EH0, EV0	DDC		Rear
4									YOKE, Drive Shaft
	05014042AA	1	5		61	EH0, EV0	DDC		
		1	5		31, 84	EH0, EV0	DDC		
	05014043AA	1	5		31, 84	EH0, EM0, EV0	DG0		
		1	5		61	EH0, EM0, EV0	DG0		
5	06506233AA	4							BOLT, Hex Head, M12
6									U-JOINT

DAKOTA (AN)

SERIES	LINE	BODY	ENGINE	TRANSMISSION
L = Quad Cab L = Regular Cab L = Club Cab	1 = Dakota 2WD 5 = Dakota 4WD	31 = CLUB CAB 2-DR 6.5 FT BOX 61 = REG CAB 6.5 FT BOX 84 = CREW CAB 4-DR W.B.1	EPO = 2.5L 4 Cyl. EHO = 3.9L 6 Cyl. EMO = 5.9L 8 Cyl. EVO = 4.7L Magnum EHC = 3.9L SMPI V6 EML = 5.9L V8 MPI Engine EPE = 2.5L POWER TECH I-4 Cyl. EVA = 4.7L V8 MPI	DDC = TRANSMISSION - 5-SPEED HD MANUAL DG4 = TRANSMISSION-MULTI-SPEED AUTO, 45RFE DGK = TRANSMISSION - 4-SPD. AUTOMATIC,42RE DGT = TRANSMISSION - 4-SPD. AUTOMATIC,46RE DGO = AUTO. TRANS.

Shaft,Propeller,Front and Rear-AN 5
Figure 16-130

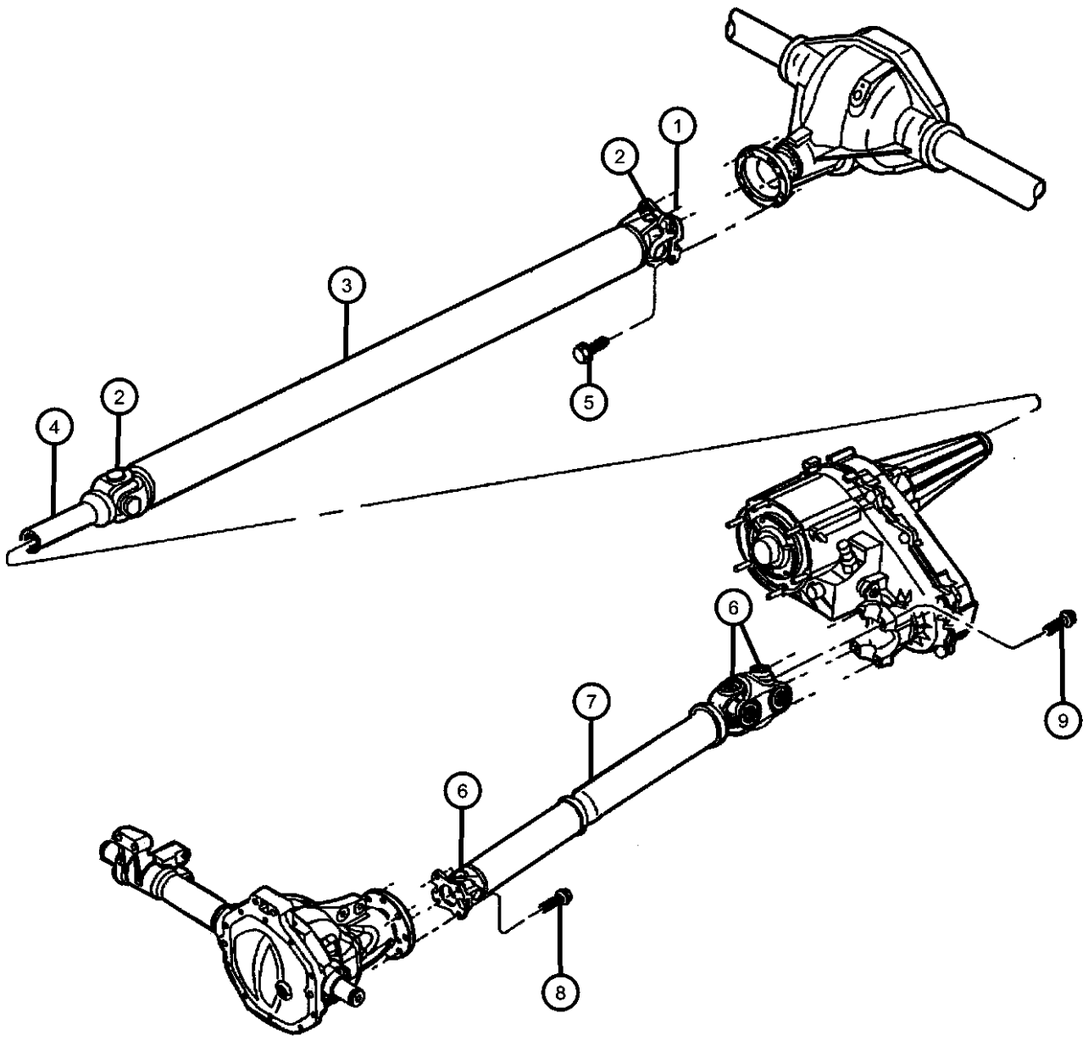

ITEM	PART NUMBER	QTY	LINE	SERIES	BODY	ENGINE	TRANS	TRIM	DESCRIPTION
	05015694AA	3	5				DG0		Front or Rear
		3	5				DBB		Front or Rear
7									SHAFT, Drive
	52099203AB	1	5				DBB		Front
	52099204AB	1	5				DG0		Front
8	06506233AA	4							BOLT, Hex Head, M12, Front Drive Shaft to Front Axle
9	06034966	4	5						BOLT, .312-24x1.170, Front Drive Shaft toTransfer Case
-10									RING, U Joint
	J3207886	4	5				DG0		Front
		4	5				DBB		Front

DAKOTA (AN)

SERIES	LINE	BODY	ENGINE	TRANSMISSION
L = Quad Cab	1 = Dakota 2WD	31 = CLUB CAB 2-DR 6.5 FT BOX	EPO = 2.5L 4 Cyl.	DDC = TRANSMISSION - 5-SPEED HD MANUAL
L = Regular Cab	5 = Dakota 4WD	61 = REG CAB 6.5 FT BOX	EHO = 3.9L 6 Cyl.	DG4 = TRANSMISSION-MULTI-SPEED AUTO, 45RFE
L = Club Cab		84 = CREW CAB 4-DR W.B.1	EMO = 5.9L 8 Cyl.	DGK = TRANSMISSION - 4-SPD. AUTOMATIC,42RE
			EVO = 4.7L Magnum	DGT = TRANSMISSION - 4-SPD. AUTOMATIC,46RE
			EHC = 3.9L SMPI V6	DGO = AUTO. TRANS.
			EML = 5.9L V8 MPI Engine	
			EPE = 2.5L POWER TECH I-4 Cyl.	
			EVA = 4.7L V8 MPI	

Group - 17

Rear Suspension

017-100 Rear Suspension 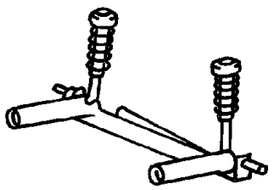	**017-200** Rear Stabilizer 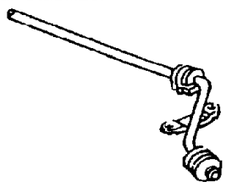		

Group - 17 Rear Suspension

Illustration Title — Group-Fig. No.

Rear Suspension

Suspension, Rear,Leaf Springs-AN 1 ..... Fig. 17 - 110
Suspension, Rear,Leaf Springs-AN 5 ..... Fig. 17 - 120

Rear Stabilizer

Stabilizer, Rear,with Shock Absorbers ..... Fig. 17 - 210

Suspension, Rear,Leaf Springs-AN 1
Figure 17-110

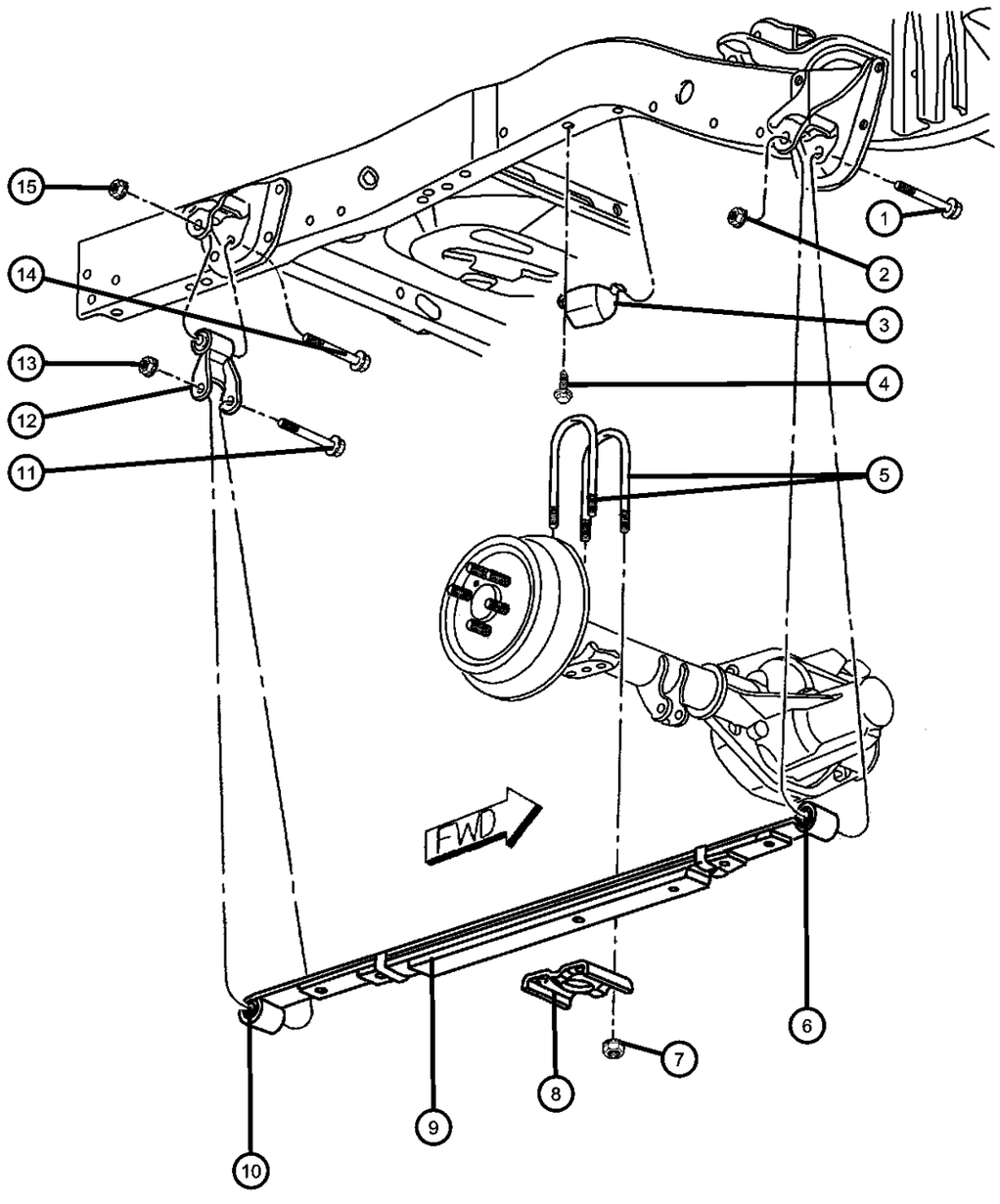

ITEM	PART NUMBER	QTY	LINE	SERIES	BODY	ENGINE	TRANS	TRIM	DESCRIPTION
Note: DRA= Chrysler 8.25—DRB=Chrysler 9.25 LD—SGB=Heavy Duty-Check the VIN number for the proper 'Z' code for the springs.									
1	06505599AA	2	1						SCREW, Pilot Point, Rear Spring to Frame Bracket Mounting, Front
2	06502698	2	1						NUT, Hex Flange Lock, Rear Spring to Frame Bracket Mounting, Front
3	52038682	2							BUMPER, Jounce
4	06503183	2							SCREW, Hex Head, M10x1.5x30, Jounce Bumper Mounting
5									CLIP, Spring
	52106207AA	4	1						DRA
	52106224AA	4	1						DRB
6									BUSHING, Spring
	52038686	2	1		31, 61				Front
		2	1		84				Front
7	06502698	8							NUT, Hex Flange Lock, Clip Plate Mounting
8									PLATE, Rear Spring Clip
	52039458AA	2	1						DRB
	52106276AA	2	1						DRA
9									SPRING, Rear Leaf
	52106360AB	1	1		31, 61				[ZAU,ZNU]
	52106361AB	1	1		31, 61				[ZAV,ZNV]
	52106362AB	1	1		31, 61				[ZBU,ZPU]
	52106363AB	1	1		31, 61				[ZBV,ZPV]
	52106364AB	1	1		31, 61				[ZCU,ZRU]
	52106365AB	1	1		31, 61				[ZCV,ZRV]
	52106437AC	1	1		31, 61				[ZDR,ZSR]
	52106764AB	1	1		84				[ZFU,ZUU]
10									BUSHING, Spring
	52038686	2	1		31, 61				Rear
		2	1		84				Rear
11	06505599AA	2	1						SCREW, Pilot Point, Shackle to Spring Mounting, Rear
12	52039204	2							SHACKLE, Spring

DAKOTA (AN)

SERIES	LINE	BODY	ENGINE	TRANSMISSION
L = Quad Cab L = Regular Cab L = Club Cab	1 = Dakota 2WD 5 = Dakota 4WD	31 = CLUB CAB 2-DR 6.5 FT BOX 61 = REG CAB 6.5 FT BOX 84 = CREW CAB 4-DR W.B.1	EPO = 2.5L 4 Cyl. EHO = 3.9L 6 Cyl. EMO = 5.9L 8 Cyl. EVO = 4.7L Magnum EHC = 3.9L SMPI V6 EML = 5.9L V8 MPI Engine EPE = 2.5L POWER TECH I-4 Cyl. EVA = 4.7L V8 MPI	DDC = TRANSMISSION - 5-SPEED HD MANUAL DG4 = TRANSMISSION-MULTI-SPEED AUTO, 45RFE DGK = TRANSMISSION - 4-SPD. AUTOMATIC,42RE DGT = TRANSMISSION - 4-SPD. AUTOMATIC,46RE DGO = AUTO. TRANS.

Suspension, Rear,Leaf Springs-AN 1
Figure 17-110

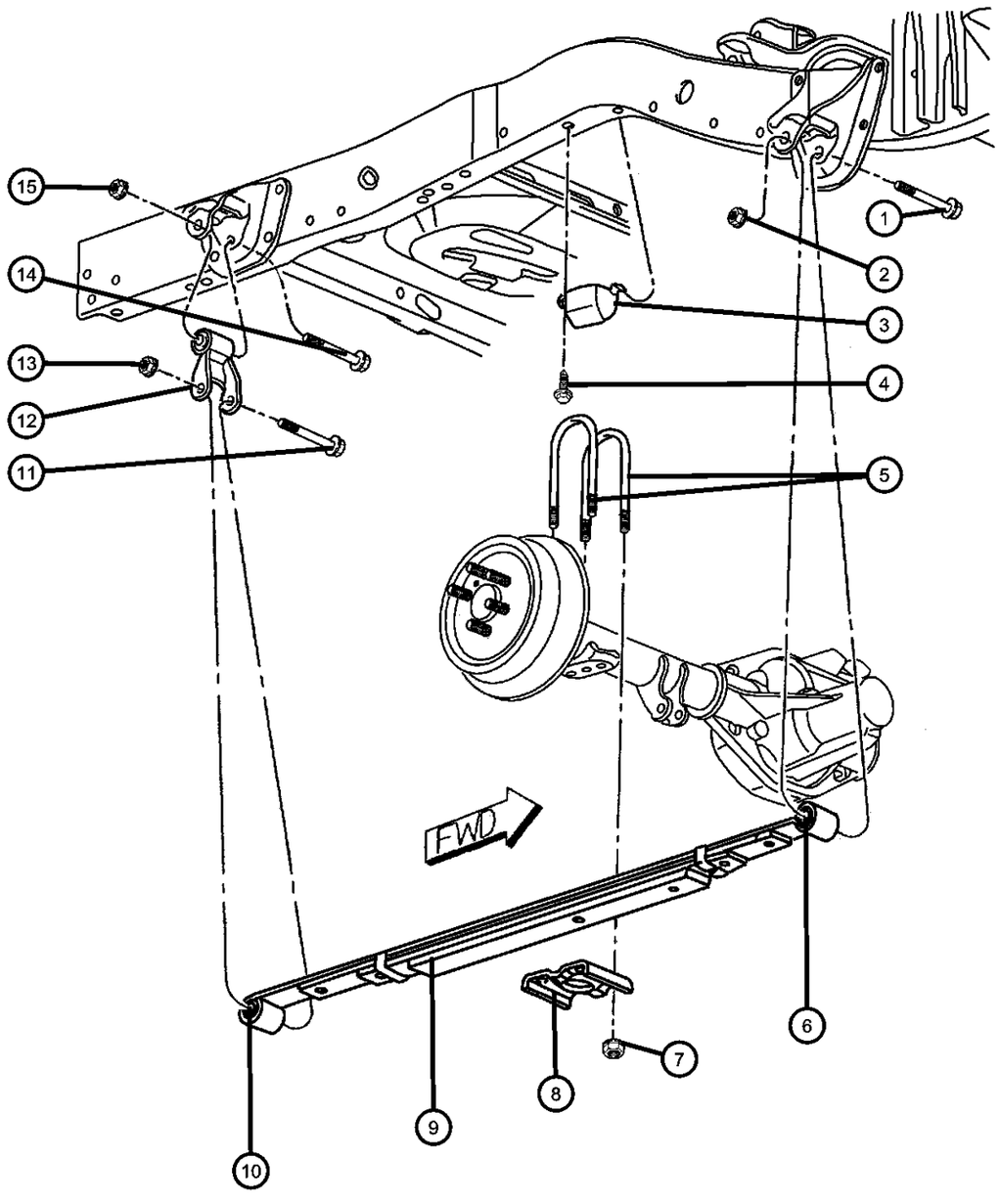

ITEM	PART NUMBER	QTY	LINE	SERIES	BODY	ENGINE	TRANS	TRIM	DESCRIPTION
13	06502698	2	1						NUT, Hex Flange Lock, Shackle to Spring Mounting, Rear
14	06505599AA	2	1						SCREW, Pilot Point, Shackle to Frame Bracket Mounting, Rear
15	06502698	2	1						NUT, Hex Flange Lock, Shackle to Frame Bracket Mounting, Rear

DAKOTA (AN)

SERIES	LINE	BODY	ENGINE	TRANSMISSION
L = Quad Cab L = Regular Cab L = Club Cab	1 = Dakota 2WD 5 = Dakota 4WD	31 = CLUB CAB 2-DR 6.5 FT BOX 61 = REG CAB 6.5 FT BOX 84 = CREW CAB 4-DR W.B.1	EPO = 2.5L 4 Cyl. EHO = 3.9L 6 Cyl. EMO = 5.9L 8 Cyl. EVO = 4.7L Magnum EHC = 3.9L SMPI V6 EML = 5.9L V8 MPI Engine EPE = 2.5L POWER TECH I-4 Cyl. EVA = 4.7L V8 MPI	DDC = TRANSMISSION - 5-SPEED HD MANUAL DG4 = TRANSMISSION-MULTI-SPEED AUTO, 45RFE DGK = TRANSMISSION - 4-SPD. AUTOMATIC,42RE DGT = TRANSMISSION - 4-SPD. AUTOMATIC,46RE DGO = AUTO. TRANS.

Suspension, Rear,Leaf Springs-AN 5
Figure 17-120

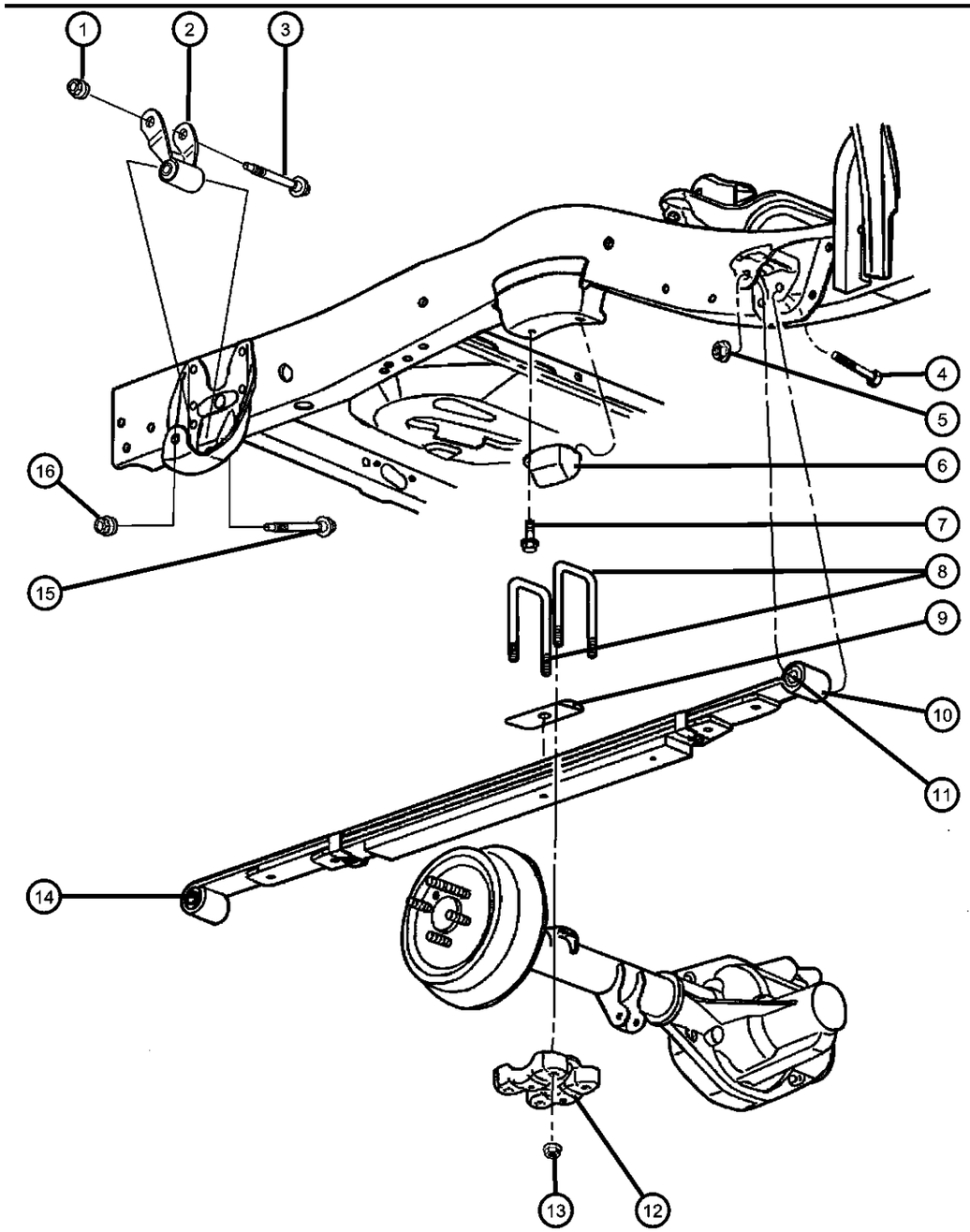

ITEM	PART NUMBER	QTY	LINE	SERIES	BODY	ENGINE	TRANS	TRIM	DESCRIPTION
Note: SGB=Rear Heavy Duty—DRA=Chrysler 8.25 Rear Axle—DRB= Chrysler 9.25 LD Rear Axle									
1	06502698	2	5						NUT, Hex Flange Lock
2	52039204	2							SHACKLE, Spring
3	06505599AA	6							SCREW, Pilot Point
4	06505599AA	6							SCREW, Pilot Point
5	06502698	2	5						NUT, Hex Flange Lock
6	52038682	2							BUMPER, Jounce
7	06503183	2							SCREW, Hex Head, M10x1.5x30, Jounce Bumper Mounting
8									CLIP, Spring
	52038482	4	5						[DRB]
	52106206AA	4	5						[DRA]
9	52038217	2	5						SEAT, Spring
10									SPRING, Rear Leaf
	52106743AB	1	5		31, 61				[ZDU,ZSU]
	52106744AB	1	5		31, 61				[ZDV,ZSV]
	52106745AB	1	5		31, 61				[ZEU,ZTU]
	52106746AB	1	5		31, 61				[ZEV,ZTV]
	52106765AD	1	5		84				[ZGU,ZVU]
11									BUSHING, Spring
	52038686	1	5		31, 61				
		1	5		84				
12									PLATE, Rear Spring Clip
	52038457	2	5						[DRB]
	55024582AB	2	5						[DRA]
13	06502698	8							NUT, Hex Flange Lock
14									BUSHING, Spring
	52038687	1	5		31, 61				
		1	5		84				
15	06505599AA	6							SCREW, Pilot Point
16	06502698	2	5						NUT, Hex Flange Lock

DAKOTA (AN)

SERIES	LINE	BODY	ENGINE	TRANSMISSION
L = Quad Cab L = Regular Cab L = Club Cab	1 = Dakota 2WD 5 = Dakota 4WD	31 = CLUB CAB 2-DR 6.5 FT BOX 61 = REG CAB 6.5 FT BOX 84 = CREW CAB 4-DR W.B.1	EPO = 2.5L 4 Cyl. EHO = 3.9L 6 Cyl. EMO = 5.9L 8 Cyl. EVO = 4.7L Magnum EHC = 3.9L SMPI V6 EML = 5.9L V8 MPI Engine EPE = 2.5L POWER TECH I-4 Cyl. EVA = 4.7L V8 MPI	DDC = TRANSMISSION - 5-SPEED HD MANUAL DG4 = TRANSMISSION-MULTI-SPEED AUTO, 45RFE DGK = TRANSMISSION - 4-SPD. AUTOMATIC,42RE DGT = TRANSMISSION - 4-SPD. AUTOMATIC,46RE DGO = AUTO. TRANS.

AR = use ase required - = Non illustrrated part

Stabilizer, Rear,with Shock Absorbers
Figure 17-210

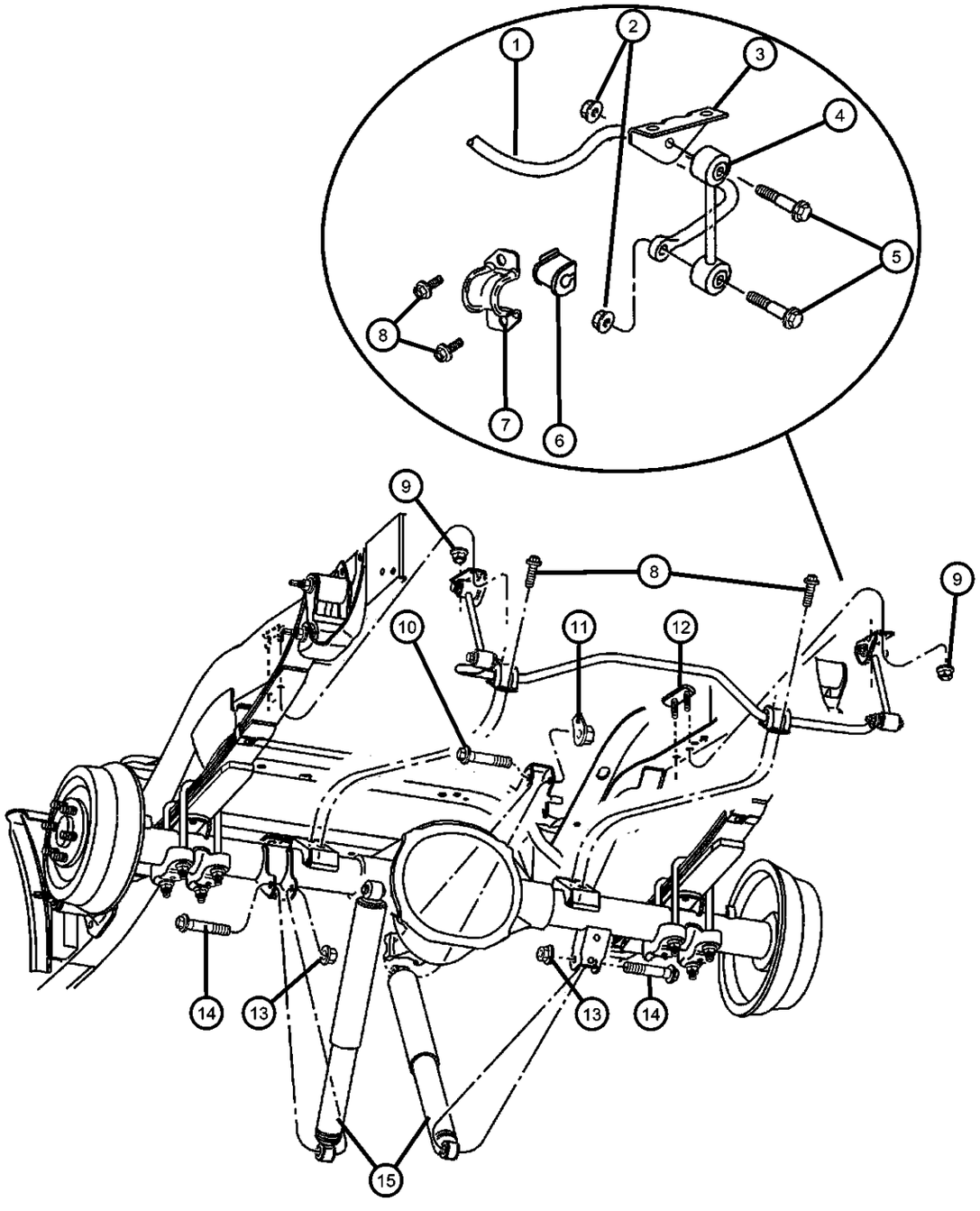

ITEM	PART NUMBER	QTY	LINE	SERIES	BODY	ENGINE	TRANS	TRIM	DESCRIPTION
Note: SHC= Stabilizer Bar-Front and Rear—SHD= Stabilizer Bar- Rear Heavy Duty—Check VIN number for the Proper 'Z' code for the Rear Sprin									
1									BAR, Rear Sway
	52106428AA	1	1		31, 61				[SHD]
	52106457AA	1							[SHC]
2	06502696	4							NUT, Hex Flange Lock, M14x1.50, Stabilizer Link to Bar Mounting
3	52038968	2							BRACKET, Stabilizer Bar, Frame to Link
4	52106303AA	2							LINK, Sway Eliminator
5	06503726	4							SCREW, Shoulder, Stabilizer Link to Bar Mounting
6									BUSHING, Stabilizer Bar
	52088125	2							SHC
	52106417AA	2	1		31, 61				SHD
7	52087865	2							RETAINER, Stabilizer Bar Grommet, Bushing
8	06503571	4							SCREW AND WASHER, M10x1.50x35, Stabilizer Bar Retainer Mounting
9	06502696	4							NUT, Hex Flange Lock, M14x1.50
10	06503712	2							SCREW, Shock Mounting, Upper
11	06504983AA	2							NUT AND RETAINER, Hex Flange Locking, M12x1.75, Shock Mounting, Upper
12	52038713	2							PLATE, Stabilizer Bar, with Studs
13	06502697	2							NUT, Hex Flange Lock, M12x1.75, Shock Mounting, Lower
14	06503712	2							SCREW, Shock Mounting, Lower
15									SHOCK ABSORBER, Suspension, Rear
	52038559AB	2	1		31, 61				[SGB,Z1J]
	0SGR5147								Rancho Shock
	0SG23319								Mopar V-Line Alternative Part
	52106337AA	2	1		31, 61				[SGD,Z1J]
	0SGR5248								Rancho Shock
	52106758AC	2	1		84				[SGB,Z1B]
	0SGR5248								Rancho Shock

DAKOTA (AN)

SERIES	LINE	BODY	ENGINE	TRANSMISSION
L = Quad Cab L = Regular Cab L = Club Cab	1 = Dakota 2WD 5 = Dakota 4WD	31 = CLUB CAB 2-DR 6.5 FT BOX 61 = REG CAB 6.5 FT BOX 84 = CREW CAB 4-DR W.B.1	EPO = 2.5L 4 Cyl. EHO = 3.9L 6 Cyl. EMO = 5.9L 8 Cyl. EVO = 4.7L Magnum EHC = 3.9L SMPI V6 EML = 5.9L V8 MPI Engine EPE = 2.5L POWER TECH I-4 Cyl. EVA = 4.7L V8 MPI	DDC = TRANSMISSION - 5-SPEED HD MANUAL DG4 = TRANSMISSION-MULTI-SPEED AUTO, 45RFE DGK = TRANSMISSION - 4-SPD. AUTOMATIC,42RE DGT = TRANSMISSION - 4-SPD. AUTOMATIC,46RE DGO = AUTO. TRANS.

Stabilizer, Rear,with Shock Absorbers
Figure 17-210

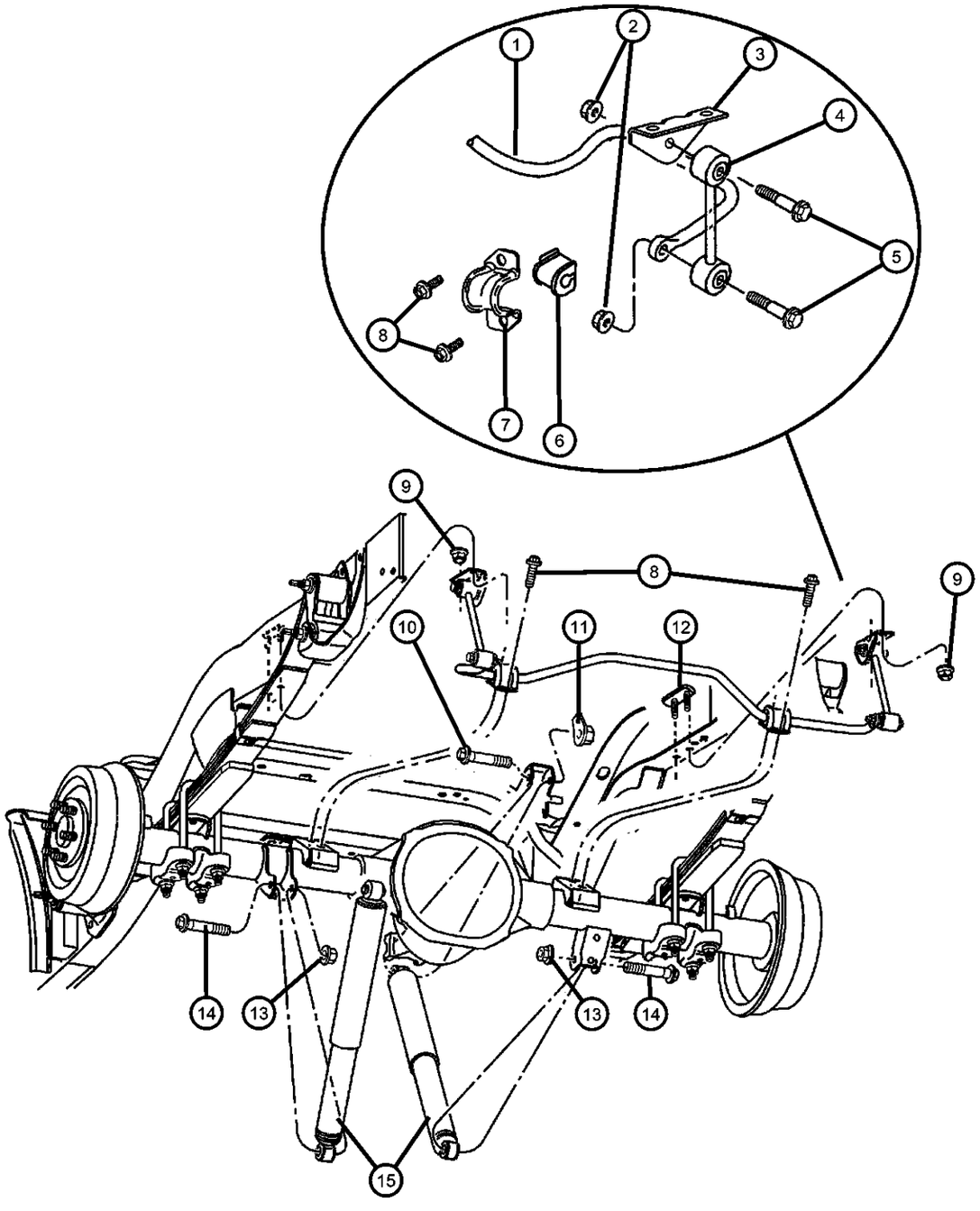

ITEM	PART NUMBER	QTY	LINE	SERIES	BODY	ENGINE	TRANS	TRIM	DESCRIPTION
	0SG23319								Mopar V-Line Alternative Part
	52106759AA	2	5		84				[SGB,Z5A]
	52106927AB	2	1		31, 61				[SGB,Z1B]
	0SGR5147								Rancho Shock
	0SG23319								Mopar V-Line Alternative Part
	52106928AB	2	5		31, 61				[SGB,Z5A]
	0SGR5248								Rancho Shock
	0SG23321								Mopar V-Line Alternative Part
	52106929AB	2	1		31, 61				[SGB,Z1D,Z1K]
	0SGR5147								Rancho Shock
	0SG23319								Mopar V-Line Alternative Part
	52106955AA	2	5		31, 61				[SGB,Z5B,Z5C]

DAKOTA (AN)

SERIES	LINE	BODY	ENGINE	TRANSMISSION
L = Quad Cab	1 = Dakota 2WD	31 = CLUB CAB 2-DR 6.5 FT BOX	EPO = 2.5L 4 Cyl.	DDC = TRANSMISSION - 5-SPEED HD MANUAL
L = Regular Cab	5 = Dakota 4WD	61 = REG CAB 6.5 FT BOX	EHO = 3.9L 6 Cyl.	DG4 = TRANSMISSION-MULTI-SPEED AUTO, 45RFE
L = Club Cab		84 = CREW CAB 4-DR W.B.1	EMO = 5.9L 8 Cyl.	DGK = TRANSMISSION - 4-SPD. AUTOMATIC,42RE
			EVO = 4.7L Magnum	DGT = TRANSMISSION - 4-SPD. AUTOMATIC,46RE
			EHC = 3.9L SMPI V6	DGO = AUTO. TRANS.
			EML = 5.9L V8 MPI Engine	
			EPE = 2.5L POWER TECH I-4 Cyl.	
			EVA = 4.7L V8 MPI	

Group - 19

Steering

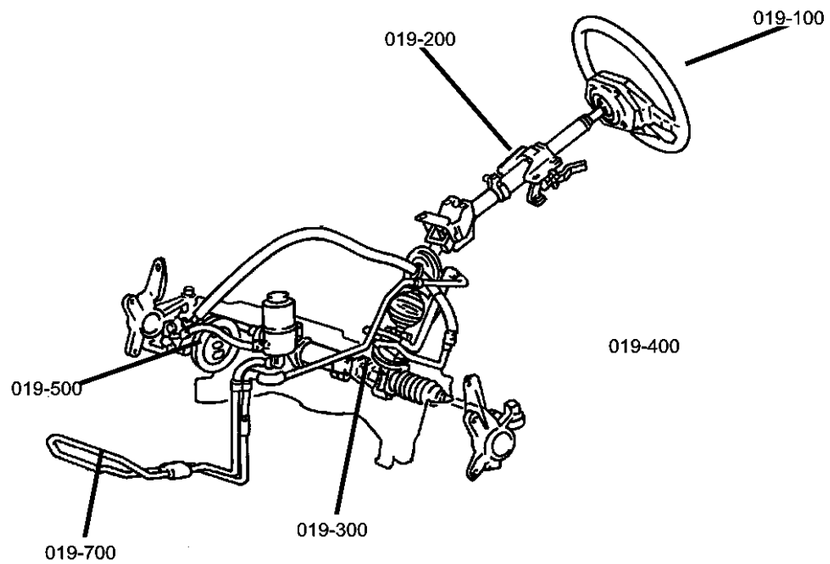

019-100 Steering Wheel 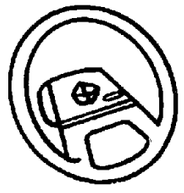	**019-200** Steering Column 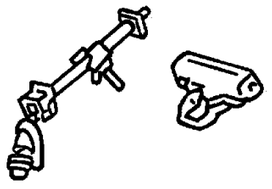	**019-300** Steering Gear 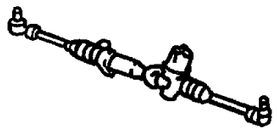	**019-500** Power Steering Pump 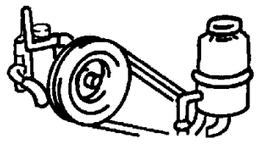
019-700 Power Steering Hoses 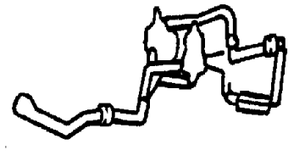			

Group - 19 Steering

Illustration Title — Group-Fig. No.

Steering Wheel
Wheel, Steering ..... Fig. 19 - 110

Steering Column
Column,Steering,Upper and Lower ..... Fig. 19 - 210

Steering Gear
Gear, Rack & Pinion Power Steering, N1 ..... Fig. 19 - 310
Gear, Rack & Pinion Power Steering, N5 ..... Fig. 19 - 320

Power Steering Pump
Pump, Mounting and Pulley,2.5L Engine ..... Fig. 19 - 510
Pump, Mounting and Pulley,3.9L,5.9L Engines ..... Fig. 19 - 520
Pump, Mounting and Pulley,4.7L Engine ..... Fig. 19 - 530

Power Steering Hoses
Hoses, Power Steering,2.5L [EP0] Engine ..... Fig. 19 - 710
Hoses, Power Steering,3.9, 5.9L Engine ..... Fig. 19 - 720
Hoses, Power Steering,4.7L Engine ..... Fig. 19 - 730

Wheel, Steering
Figure 19-110

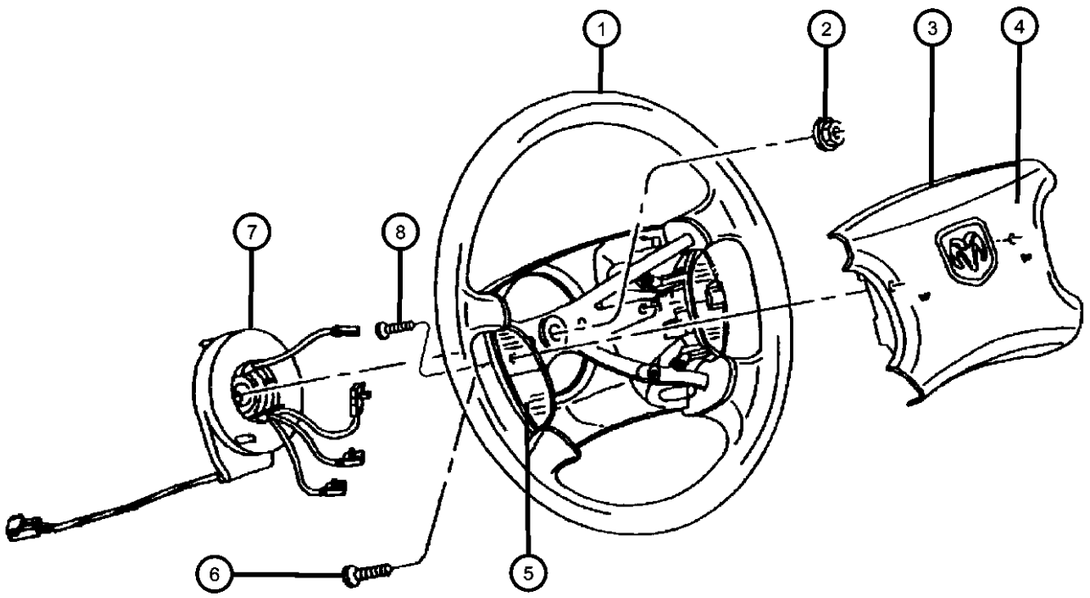

ITEM	PART NUMBER	QTY	LINE	SERIES	BODY	ENGINE	TRANS	TRIM	DESCRIPTION
Note:If Horn Switch is defective, you must replace the AIR BAG COVER WITH SWITCH and not the AIR BAG MODULE ASSEMBLY itself.									
Note: SCD=Luxury Steering Wheel—SCG=Leather Wrapped Steering Wheel—NHM=Speed Contro—RDZ=Steering Wheel Mounted Audio Cont									
1									WHEEL, Steering
	5EH10DX9AC	1							[SCD,-NHM]
	5FL421X9AD	1							[SCG,+NHM,-RDZ]
	5FM14DX9AC	1							[SCD,+NHM]
	5GC421X9AF	1							[SCG,+NHM,+RDZ]
2									NUT, Hex Flange Lock
	06505248AA	1					DBB		Steering Wheel Attaching
		1					DG0		Steering Wheel Attaching
3	5GV11DX9AA	1							AIR BAG, Driver
4	0TK64DX9AA	1							COVER, Air Bag Module, Includes Horn Switch
5									SWITCH, Speed Control
	56021332AB	1							Right
	56021333AB	1							Left
6	06036149AA	4							SCREW, Pan Head, Cruise Control Mounting
7									CLOCKSPRING
	56045454AD	1							[-NHM}
	56045455AD	1							[NHM,-RDZ]
	56045456AD	1							[NHM,+RDZ]
8	06506091AA	2							SCREW, M6x1x25, Air Bag Mounting
-9									SWITCH, Radio Control
	04685619AB	1							[SCG,+NHM,+RDZ], Right
	04685632AB	1							[SCG,+NHM,+RDZ], Left

DAKOTA (AN)

SERIES	LINE	BODY	ENGINE	TRANSMISSION
L = Quad Cab	1 = Dakota 2WD	31 = CLUB CAB 2-DR 6.5 FT BOX	EPO = 2.5L 4 Cyl.	DDC = TRANSMISSION - 5-SPEED HD MANUAL
L = Regular Cab	5 = Dakota 4WD	61 = REG CAB 6.5 FT BOX	EHO = 3.9L 6 Cyl.	DG4 = TRANSMISSION-MULTI-SPEED AUTO, 45RFE
L = Club Cab		84 = CREW CAB 4-DR W.B.1	EMO = 5.9L 8 Cyl.	DGK = TRANSMISSION - 4-SPD. AUTOMATIC,42RE
			EVO = 4.7L Magnum	DGT = TRANSMISSION - 4-SPD. AUTOMATIC,46RE
			EHC = 3.9L SMPI V6	DGO = AUTO. TRANS.
			EML = 5.9L V8 MPI Engine	
			EPE = 2.5L POWER TECH I-4 Cyl.	
			EVA = 4.7L V8 MPI	

Column,Steering,Upper and Lower
Figure 19-210

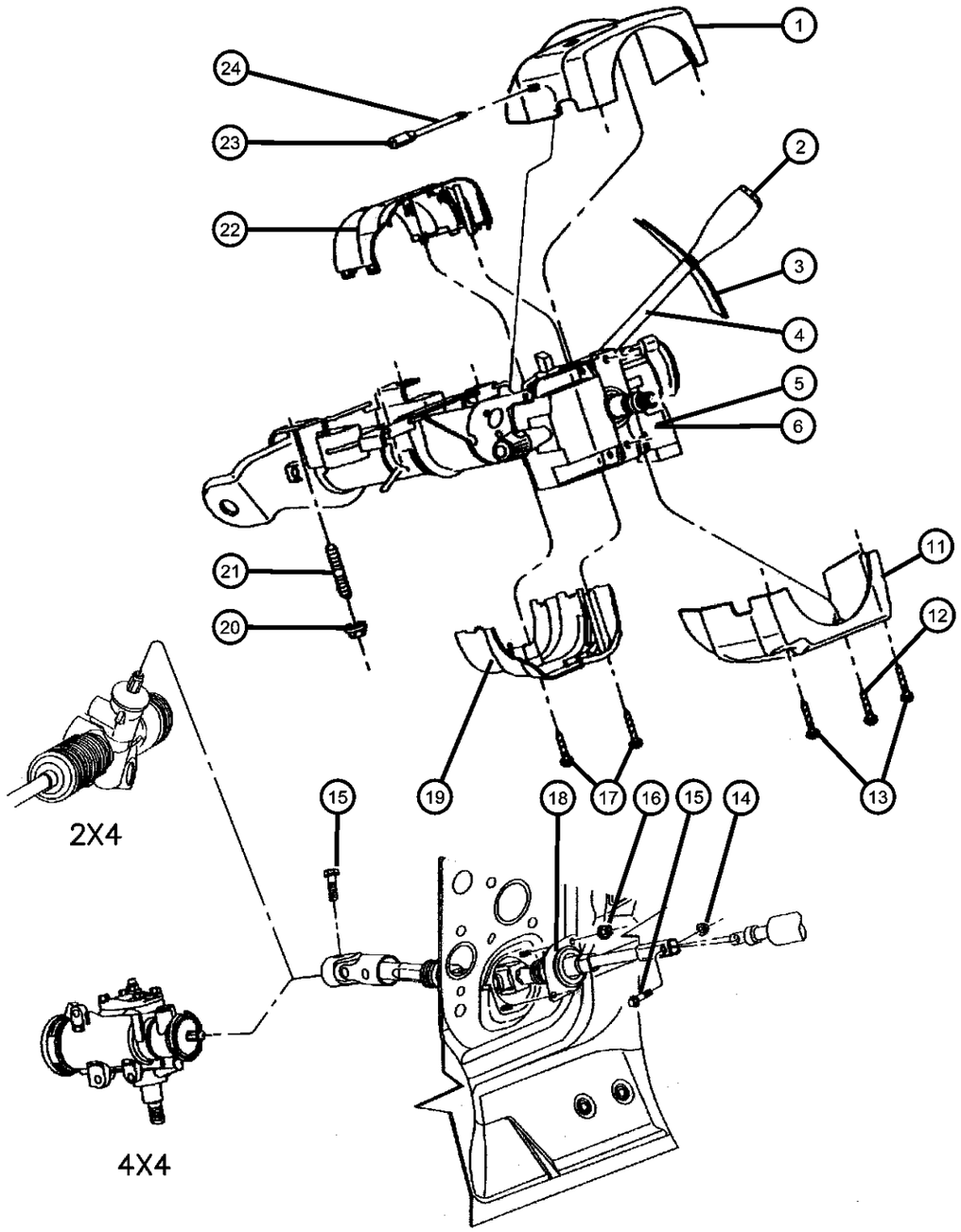

ITEM	PART NUMBER	QTY	LINE	SERIES	BODY	ENGINE	TRANS	TRIM	DESCRIPTION
NOTES; SALES CODE DBB= ALL MANUAL TRANSMISSIONS, DGO = ALL AUTOMATIC TRANS—SUA=TILT STEERING COLUMN									
1									SHROUD, Lock Housing
	0DH69JX8	1							[+SUA], Upper Rear
	0DH72KX8	1							[-SUA], Upper Rear
2	56021048	1					DG0		SWITCH, Overdrive Lockout
3	04470108AB	1					DG0		GAP HIDER, Steering Column Shroud
4	04690522AB	1					DG0		LEVER, Gearshift, with OD Switch and Gap Hider
5									COLUMN, Steering, Tilt
	04874454AC	1					DBB		
	04874455AC	1					DG0		
6									COLUMN, Steering, Non tilt
	04874451AB	1					DBB		
	04874452AB	1					DG0		
-7									BEARING, Steering Column Shaft
	04147362	1					DBB		Upper
		1					DG0		Upper
-8									SNAP RING, Steering Column, .687
	06032364	1					DBB		Steering Column Shaft Bearing, Upper
		1					DG0		Steering Column Shaft Bearing, Upper
-9									SPRING, Steering Lock Plate
	04326811	1					DBB		
		1					DG0		
-10	52078233	1					DG0		ARM, Gearshift Selector
11	0KJ95JX8AB	1							SHROUD, Steering ColumnLower Rear
12	06035142	2							SCREW, .164-32x1.00, Lower Rear Lock Housing Shroud to Steering Column, Mounting
13	04470105	3							SCREW, Filister Head, #8-16x.25, Lower Rear Lock Housing Shroud to Upper Rear Lock Housing Shroud, Mounting

DAKOTA (AN)

SERIES	LINE	BODY	ENGINE	TRANSMISSION
L = Quad Cab L = Regular Cab L = Club Cab	1 = Dakota 2WD 5 = Dakota 4WD	31 = CLUB CAB 2-DR 6.5 FT BOX 61 = REG CAB 6.5 FT BOX 84 = CREW CAB 4-DR W.B.1	EPO = 2.5L 4 Cyl. EHO = 3.9L 6 Cyl. EMO = 5.9L 8 Cyl. EVO = 4.7L Magnum EHC = 3.9L SMPI V6 EML = 5.9L V8 MPI Engine EPE = 2.5L POWER TECH I-4 Cyl. EVA = 4.7L V8 MPI	DDC = TRANSMISSION - 5-SPEED HD MANUAL DG4 = TRANSMISSION-MULTI-SPEED AUTO, 45RFE DGK = TRANSMISSION - 4-SPD. AUTOMATIC,42RE DGT = TRANSMISSION - 4-SPD. AUTOMATIC,46RE DGO = AUTO. TRANS.

Column,Steering,Upper and Lower
Figure 19-210

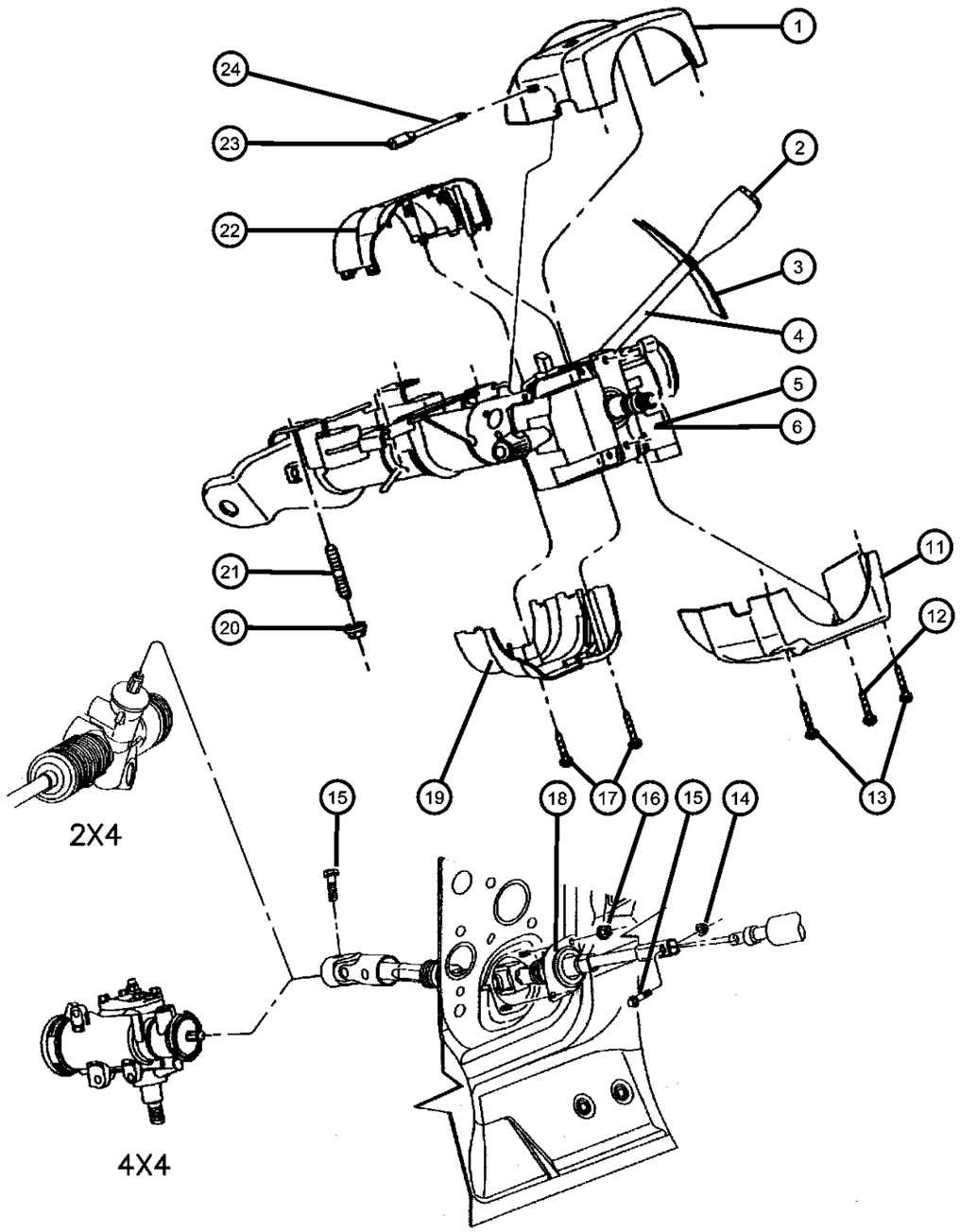

ITEM	PART NUMBER	QTY	LINE	SERIES	BODY	ENGINE	TRANS	TRIM	DESCRIPTION
14	06101510	1							NUT, Flange Lock, M10x1.50, Intermediate Shaft to Steering Column, Mounting
15	06506011AA	2							SCREW, Intermediate Shaft to Steering Column and Gear Box, Mounting
16	06506011AA	2							NUT AND WASHER, Hex, M6x1, (NOT SERVICED)
17	04470105	3							SCREW, Filister Head, #8-16x.25, Lower Front Fixed Shroud to Upper Front Fixed Shroud, Mounting
18									SHAFT, Intermediate
	52078808AC	1	1						
	55351199AA	1	5						Lower
	55351206AA	1	5						Upper
19									SHROUD, Steering Column
	5CT42JX8AC	1					DG0		Lower Front
	5CU51JX8AB	1					DBB		Lower Front
20	06503014	4							NUT AND WASHER, Hex, M6x1, Steering Column, Mounting
21	06503761	4							STUD, M6x1.00mmx48.80mm, Steering Column, Mounting
22									SHROUD, Steering Column
	5CE58JX8AB	1					DG0		Upper Front
	5CN67PX8	1					DBB		Upper Front
23	04470605	1							KNOB, TILT LEVER RELEASE
24	04470103	1							LEVER, Tilt Column Release
-25									SCREW, 6 Lobed
	06506514AA	5					DBB		
		5					DG0		
-26									SCREW, 6 Lobed
	06506514AA	5					DBB		
		5					DG0		
-27	55351120AD	1							SUPPORT, Steering Column, Right
-28	55351121AD	1							SUPPORT, Steering Column, Left

DAKOTA (AN)

SERIES	LINE	BODY	ENGINE	TRANSMISSION
L = Quad Cab L = Regular Cab L = Club Cab	1 = Dakota 2WD 5 = Dakota 4WD	31 = CLUB CAB 2-DR 6.5 FT BOX 61 = REG CAB 6.5 FT BOX 84 = CREW CAB 4-DR W.B.1	EPO = 2.5L 4 Cyl. EHO = 3.9L 6 Cyl. EMO = 5.9L 8 Cyl. EVO = 4.7L Magnum EHC = 3.9L SMPI V6 EML = 5.9L V8 MPI Engine EPE = 2.5L POWER TECH I-4 Cyl. EVA = 4.7L V8 MPI	DDC = TRANSMISSION - 5-SPEED HD MANUAL DG4 = TRANSMISSION-MULTI-SPEED AUTO, 45RFE DGK = TRANSMISSION - 4-SPD. AUTOMATIC,42RE DGT = TRANSMISSION - 4-SPD. AUTOMATIC,46RE DGO = AUTO. TRANS.

Gear, Rack & Pinion Power Steering, N1
Figure 19-310

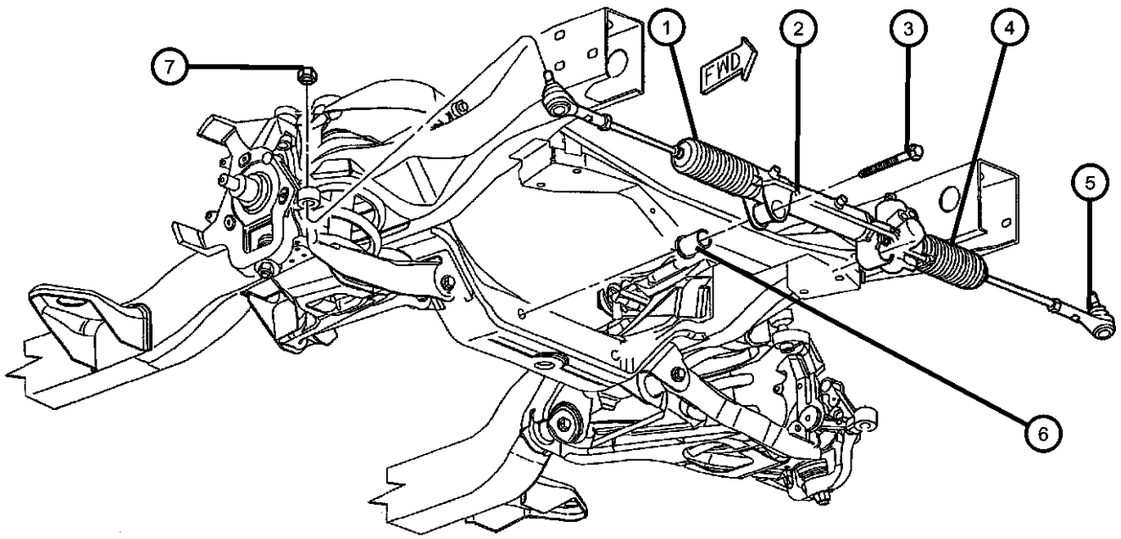

ITEM	PART NUMBER	QTY	LINE	SERIES	BODY	ENGINE	TRANS	TRIM	DESCRIPTION
1	05018278AA	1	1						BOOT, Steering GearRight
2	52106477AB	1	1						GEAR, Power Steering, with Tie Rod Ends
3	06505225AA	2	1						SCREW AND WASHER, Hex Head, Rack and Pinion Mounting
4	06505225AA	2							BOOT, Steering Gear, Serviced in rack assy only, (NOT SERVICED)
5	52106710AA	2	1						TIE ROD, Steering, Right or Left
6	52038783AB	2							BUSHING, Steering Gear, Rack and Pinion Mounting
7	06505623AA	2							NUT, Hex Locking, M14x1.5, Tie Rod Stud Mounting

DAKOTA (AN)

SERIES	LINE	BODY	ENGINE	TRANSMISSION
L = Quad Cab L = Regular Cab L = Club Cab	1 = Dakota 2WD 5 = Dakota 4WD	31 = CLUB CAB 2-DR 6.5 FT BOX 61 = REG CAB 6.5 FT BOX 84 = CREW CAB 4-DR W.B.1	EPO = 2.5L 4 Cyl. EHO = 3.9L 6 Cyl. EMO = 5.9L 8 Cyl. EVO = 4.7L Magnum EHC = 3.9L SMPI V6 EML = 5.9L V8 MPI Engine EPE = 2.5L POWER TECH I-4 Cyl. EVA = 4.7L V8 MPI	DDC = TRANSMISSION - 5-SPEED HD MANUAL DG4 = TRANSMISSION-MULTI-SPEED AUTO, 45RFE DGK = TRANSMISSION - 4-SPD. AUTOMATIC,42RE DGT = TRANSMISSION - 4-SPD. AUTOMATIC,46RE DGO = AUTO. TRANS.

Gear, Rack & Pinion Power Steering, N5
Figure 19-320

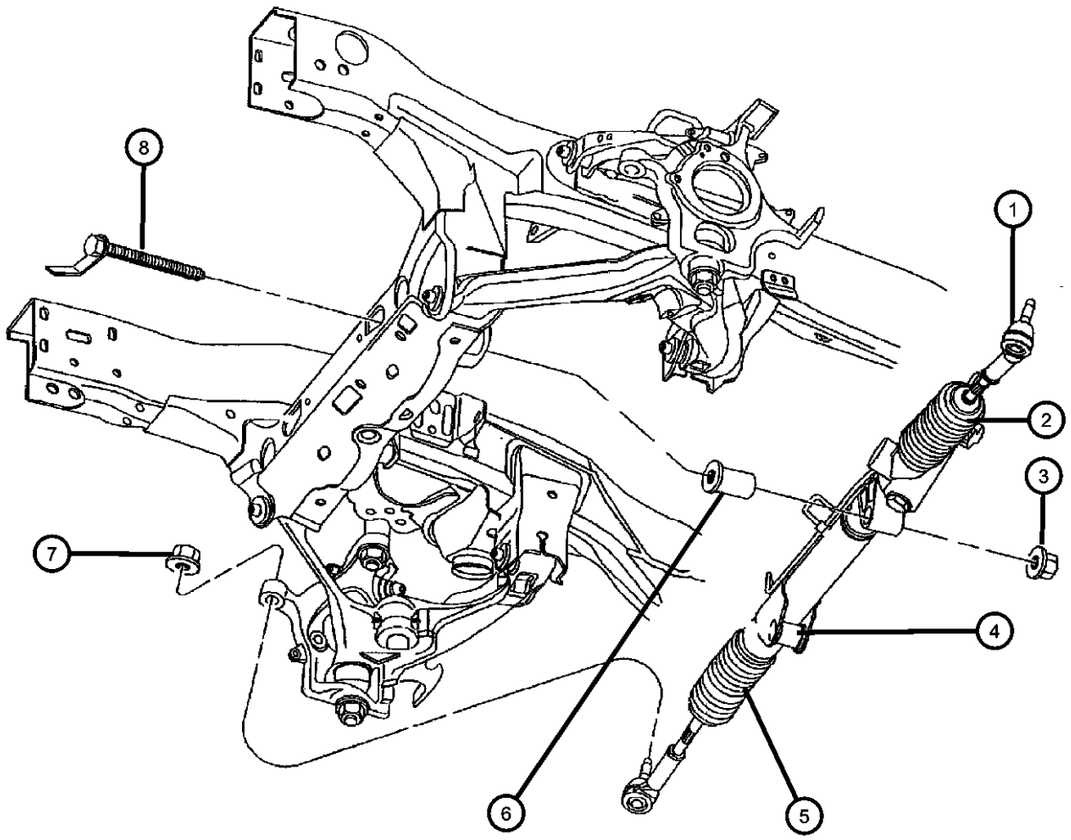

ITEM	PART NUMBER	QTY	LINE	SERIES	BODY	ENGINE	TRANS	TRIM	DESCRIPTION
1									TIE ROD, Steering
	52106544AA	1	5						Right
	52106545AA	1	5						Left
2	52106545AA	1							BOOT, Steering Gear, Assy Required, (NOT SERVICED)
3	06506387AA	2	5						NUT AND WASHER, Hex, Rack and Pinion Mounting
4	52106405AA	1	5						GEAR, Power Steering
	R0400249								Mopar Remanufactured Part
5	52106405AA	1							BOOT, Steering Gear, Assy Required, (NOT SERVICED)
6	52038783AB	2							BUSHING, Steering Gear, Rack and Pinion Mounting
7	06505623AA	1							NUT, Hex Locking, M14x1.5, Tie Rod Stud Mounting
8	06506558AA	2	5						SCREW AND WASHER, Hex Head, Rack and Pinion Mounting

DAKOTA (AN)

SERIES	LINE	BODY	ENGINE	TRANSMISSION
L = Quad Cab L = Regular Cab L = Club Cab	1 = Dakota 2WD 5 = Dakota 4WD	31 = CLUB CAB 2-DR 6.5 FT BOX 61 = REG CAB 6.5 FT BOX 84 = CREW CAB 4-DR W.B.1	EPO = 2.5L 4 Cyl. EHO = 3.9L 6 Cyl. EMO = 5.9L 8 Cyl. EVO = 4.7L Magnum EHC = 3.9L SMPI V6 EML = 5.9L V8 MPI Engine EPE = 2.5L POWER TECH I-4 Cyl. EVA = 4.7L V8 MPI	DDC = TRANSMISSION - 5-SPEED HD MANUAL DG4 = TRANSMISSION-MULTI-SPEED AUTO, 45RFE DGK = TRANSMISSION - 4-SPD. AUTOMATIC,42RE DGT = TRANSMISSION - 4-SPD. AUTOMATIC,46RE DGO = AUTO. TRANS.

Pump, Mounting and Pulley,2.5L Engine
Figure 19-510

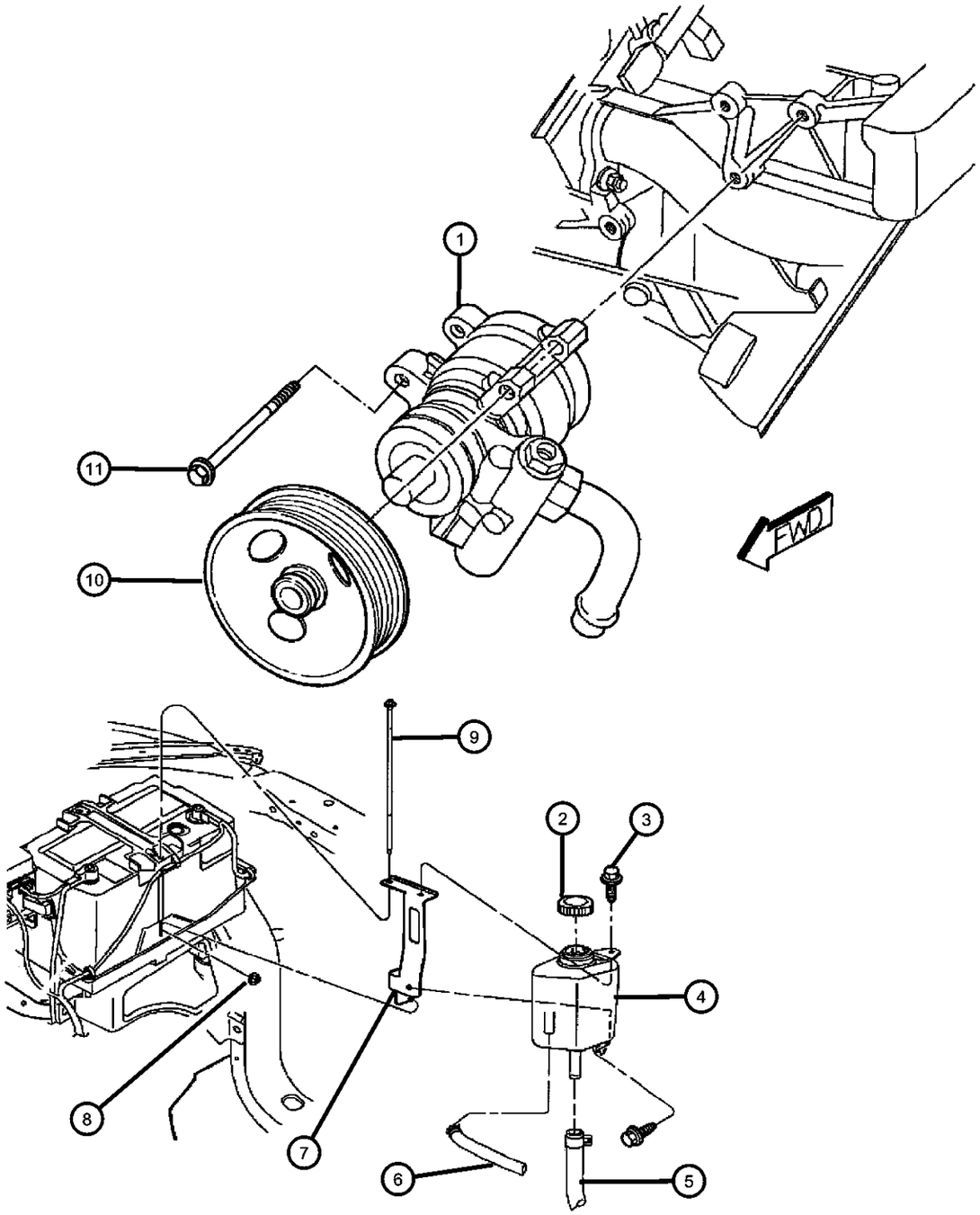

ITEM	PART NUMBER	QTY	LINE	SERIES	BODY	ENGINE	TRANS	TRIM	DESCRIPTION
Note: EP0 = 2.5L ENGINE 4 Cylinder Gas									
1	52038708	1				EP0			PUMP, Power Steering
	R2038708								Mopar Remanufactured Part
	05166226AA								Mopar Power Steering Fluid Pint
2	52039424	1				EP0			CAP, Power Steering Pump
3	06101718	2							SCREW AND WASHER, Oval Head, M6x1x25, Reservior Mounting
4	52006395	1				EP0			RESERVOIR, Power Steering Pump
5	52106716AA	1				EP0			HOSE, Pump Supply
6	52106713AA	1				EP0			HOSE, Power Steering Return
7	52106712AA	1				EP0			BRACKET, Power Steering Reservoir
8	06100048	1				EP0			NUT, Hex, M6x1.00, Power Steering Reservior Mounting to engine
9	55235142	2							STUD, Battery Hold Down, Holds Power Steering Pump Reservior Mounting Bracket
10	53010258AB	1				EP0			PULLEY, Power Steering Pump
11	06502425	3				EP0			SCREW AND WASHER, Hex Head, M8x1.25x95, Power Steering Pump Mounting

DAKOTA (AN)

SERIES	LINE	BODY	ENGINE	TRANSMISSION
L = Quad Cab	1 = Dakota 2WD	31 = CLUB CAB 2-DR 6.5 FT BOX	EPO = 2.5L 4 Cyl.	DDC = TRANSMISSION - 5-SPEED HD MANUAL
L = Regular Cab	5 = Dakota 4WD	61 = REG CAB 6.5 FT BOX	EHO = 3.9L 6 Cyl.	DG4 = TRANSMISSION-MULTI-SPEED AUTO, 45RFE
L = Club Cab		84 = CREW CAB 4-DR W.B.1	EMO = 5.9L 8 Cyl.	DGK = TRANSMISSION - 4-SPD. AUTOMATIC,42RE
			EVO = 4.7L Magnum	DGT = TRANSMISSION - 4-SPD. AUTOMATIC,46RE
			EHC = 3.9L SMPI V6	DGO = AUTO. TRANS.
			EML = 5.9L V8 MPI Engine	
			EPE = 2.5L POWER TECH I-4 Cyl.	
			EVA = 4.7L V8 MPI	

Pump, Mounting and Pulley,3.9L,5.9L Engines
Figure 19-520

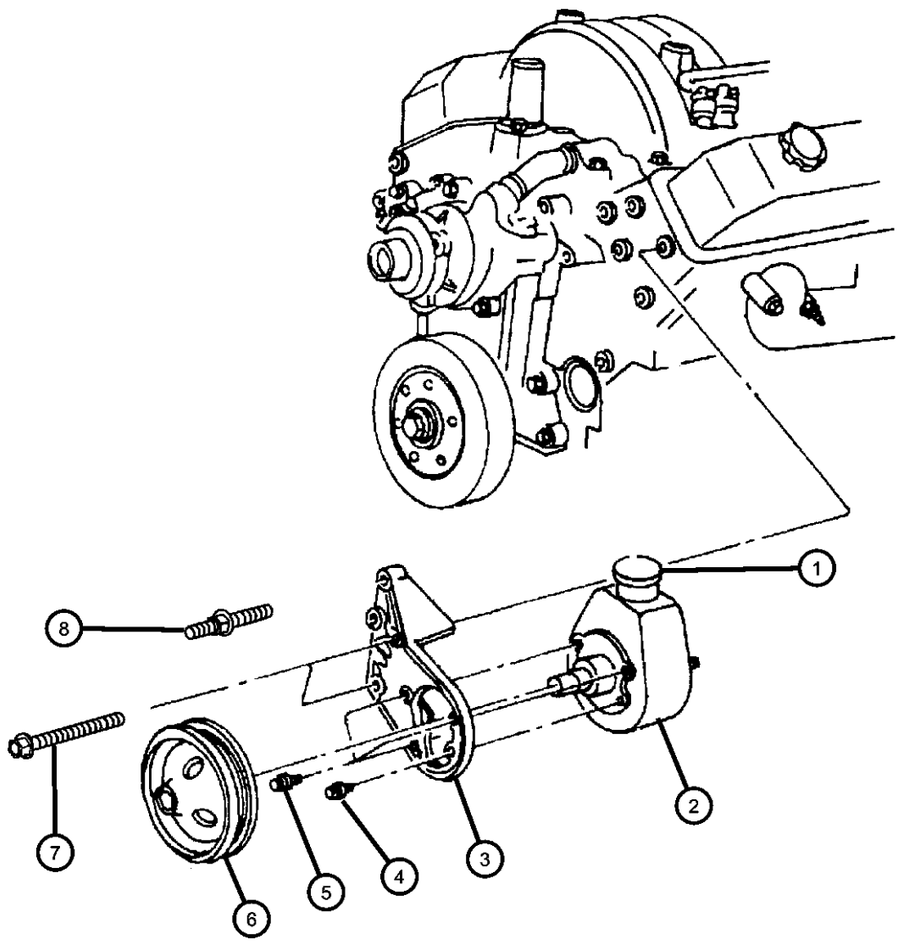

ITEM	PART NUMBER	QTY	LINE	SERIES	BODY	ENGINE	TRANS	TRIM	DESCRIPTION
Note: EH0 = ALL 3.9L V6 Cylinder Gas—EL0 = ALL 5.2L ENGINE 8 Cylinder Gas									
1	04694766	1				EH0, EM0			CAP, Power Steering Pump
2	52039489	1				EH0, EM0			PUMP, Power Steering
	R2039489								Mopar Remanufactured Part
	05166226AA								Mopar Power Steering Fluid Pint
	04883077								Mopar Power Steering Fluid Pint
3	53005613	1				EH0, EM0			BRACKET, Power Steering Pump, Mounting
4	53005613	1							SCREW, Hex Flange Head, M10x1.5x17, (NOT SERVICED)
5	06502501	3				EH0, EM0			BOLT, Hex Head, M10x1.50x28, Power Steering Pump Bracket Mounting
6	53005614	1				EH0, EM0			PULLEY, Power Steering Pump
7	06034247	2				EH0, EM0			BOLT, Hex Head, .375-16x.25, Power Steering Bracket to Cylinder Head
8									STUD, .375-16x3.04
	06034985	1				EH0, EM0			Power Steering Bracket to Cylinder Head
		1				EH0, EM0			Alternator Brace to Alternator and Air Conditioning or Alternator Bracket

DAKOTA (AN)

SERIES	LINE	BODY	ENGINE	TRANSMISSION
L = Quad Cab L = Regular Cab L = Club Cab	1 = Dakota 2WD 5 = Dakota 4WD	31 = CLUB CAB 2-DR 6.5 FT BOX 61 = REG CAB 6.5 FT BOX 84 = CREW CAB 4-DR W.B.1	EPO = 2.5L 4 Cyl. EHO = 3.9L 6 Cyl. EMO = 5.9L 8 Cyl. EVO = 4.7L Magnum EHC = 3.9L SMPI V6 EML = 5.9L V8 MPI Engine EPE = 2.5L POWER TECH I-4 Cyl. EVA = 4.7L V8 MPI	DDC = TRANSMISSION - 5-SPEED HD MANUAL DG4 = TRANSMISSION-MULTI-SPEED AUTO, 45RFE DGK = TRANSMISSION - 4-SPD. AUTOMATIC,42RE DGT = TRANSMISSION - 4-SPD. AUTOMATIC,46RE DGO = AUTO. TRANS.

Pump, Mounting and Pulley,4.7L Engine
Figure 19-530

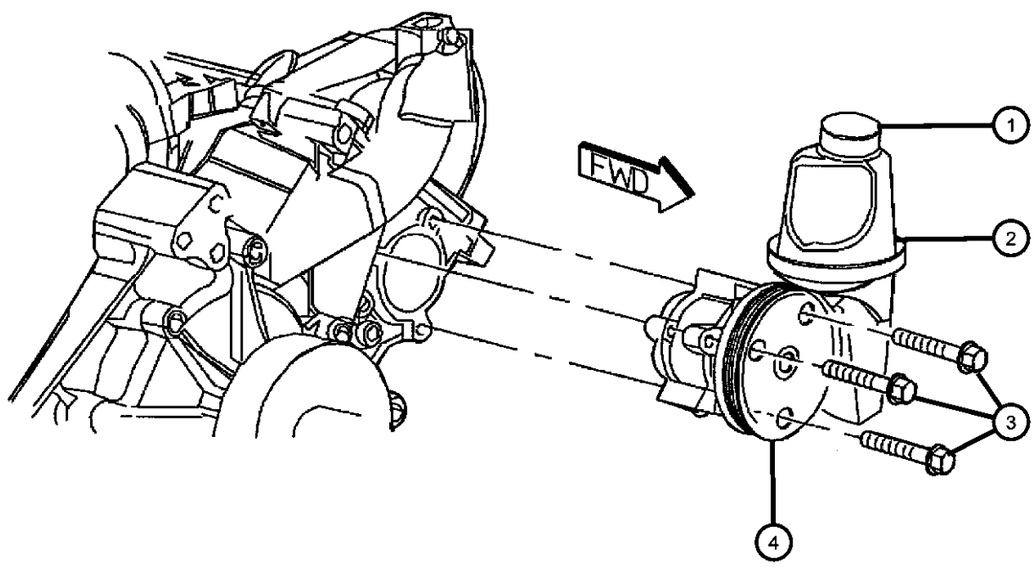

ITEM	PART NUMBER	QTY	LINE	SERIES	BODY	ENGINE	TRANS	TRIM	DESCRIPTION
Note: EV0= 4.7L V-8 Gas Engine									
1	52039424	1				EV0			CAP, Power Steering Pump
2	52106253AC	1				EV0			PUMP, Power Steering, Includes Cap and Pulley
	05166226AA								Mopar Power Steering Fluid Pint
3	06102045AA	3				EV0			SCREW AND WASHER, Hex Head, Power Steering Pump Mounting
4	53030962	1				EV0			PULLEY, Power Steering Pump

DAKOTA (AN)

SERIES	LINE	BODY	ENGINE	TRANSMISSION
L = Quad Cab	1 = Dakota 2WD	31 = CLUB CAB 2-DR 6.5 FT BOX	EPO = 2.5L 4 Cyl.	DDC = TRANSMISSION - 5-SPEED HD MANUAL
L = Regular Cab	5 = Dakota 4WD	61 = REG CAB 6.5 FT BOX	EHO = 3.9L 6 Cyl.	DG4 = TRANSMISSION-MULTI-SPEED AUTO, 45RFE
L = Club Cab		84 = CREW CAB 4-DR W.B.1	EMO = 5.9L 8 Cyl.	DGK = TRANSMISSION - 4-SPD. AUTOMATIC,42RE
			EVO = 4.7L Magnum	DGT = TRANSMISSION - 4-SPD. AUTOMATIC,46RE
			EHC = 3.9L SMPI V6	DGO = AUTO. TRANS.
			EML = 5.9L V8 MPI Engine	
			EPE = 2.5L POWER TECH I-4 Cyl.	
			EVA = 4.7L V8 MPI	

Hoses, Power Steering,2.5L [EP0] Engine
Figure 19-710

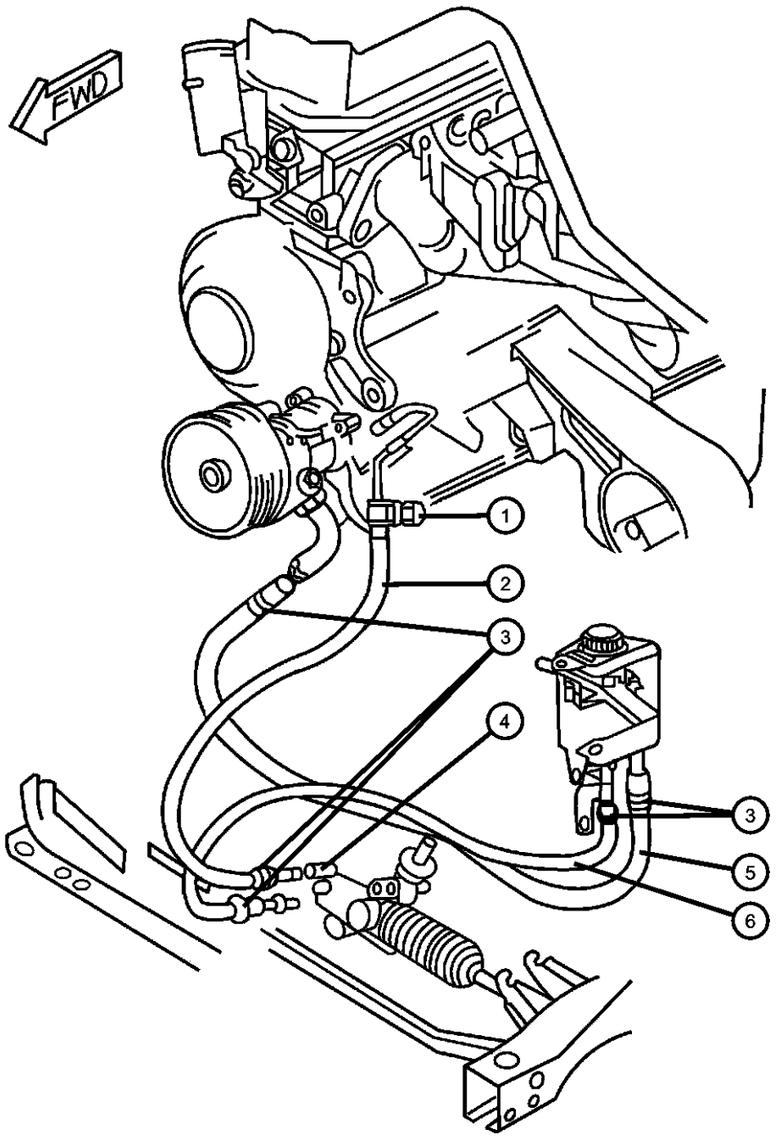

ITEM	PART NUMBER	QTY	LINE	SERIES	BODY	ENGINE	TRANS	TRIM	DESCRIPTION
Note: Sases Codes; EPE=Engine - 'Magnum' 2.5L SMPI I4 EP0=Engines - All 2.5L 4 Cylinder Gas EH0=Engines - All 3.9L V6 Gas EM0=Engines - All 5.9L 8 Cylinder Gas									
1	56027906AB	1				EP0			SWITCH, Power Steering
2	52038945	1				EP0			HOSE, Power Steering Pressure
3	02448761	1				EP0			CLAMP, Hose, as Required
4	52037556	1	1						FITTING, Power Steering, Quick Connect
5	52106716AA	1				EP0			HOSE, Pump Supply
6									HOSE, Power Steering Return
	52106215AF	1	5			EH0, EM0, EP0			
	52106713AA	1				EP0			
-7	05205254	1				EP0			O RING, Power Steering Hose, as Required
-8	06506211AA	1	1			EPE			CLIP, Power Steering Hose

DAKOTA (AN)

SERIES	LINE	BODY	ENGINE	TRANSMISSION
L = Quad Cab L = Regular Cab L = Club Cab	1 = Dakota 2WD 5 = Dakota 4WD	31 = CLUB CAB 2-DR 6.5 FT BOX 61 = REG CAB 6.5 FT BOX 84 = CREW CAB 4-DR W.B.1	EPO = 2.5L 4 Cyl. EHO = 3.9L 6 Cyl. EMO = 5.9L 8 Cyl. EVO = 4.7L Magnum EHC = 3.9L SMPI V6 EML = 5.9L V8 MPI Engine EPE = 2.5L POWER TECH I-4 Cyl. EVA = 4.7L V8 MPI	DDC = TRANSMISSION - 5-SPEED HD MANUAL DG4 = TRANSMISSION-MULTI-SPEED AUTO, 45RFE DGK = TRANSMISSION - 4-SPD. AUTOMATIC,42RE DGT = TRANSMISSION - 4-SPD. AUTOMATIC,46RE DGO = AUTO. TRANS.

AR = use ase required - = Non illustrrated part

Hoses, Power Steering,3.9, 5.9L Engine
Figure 19-720

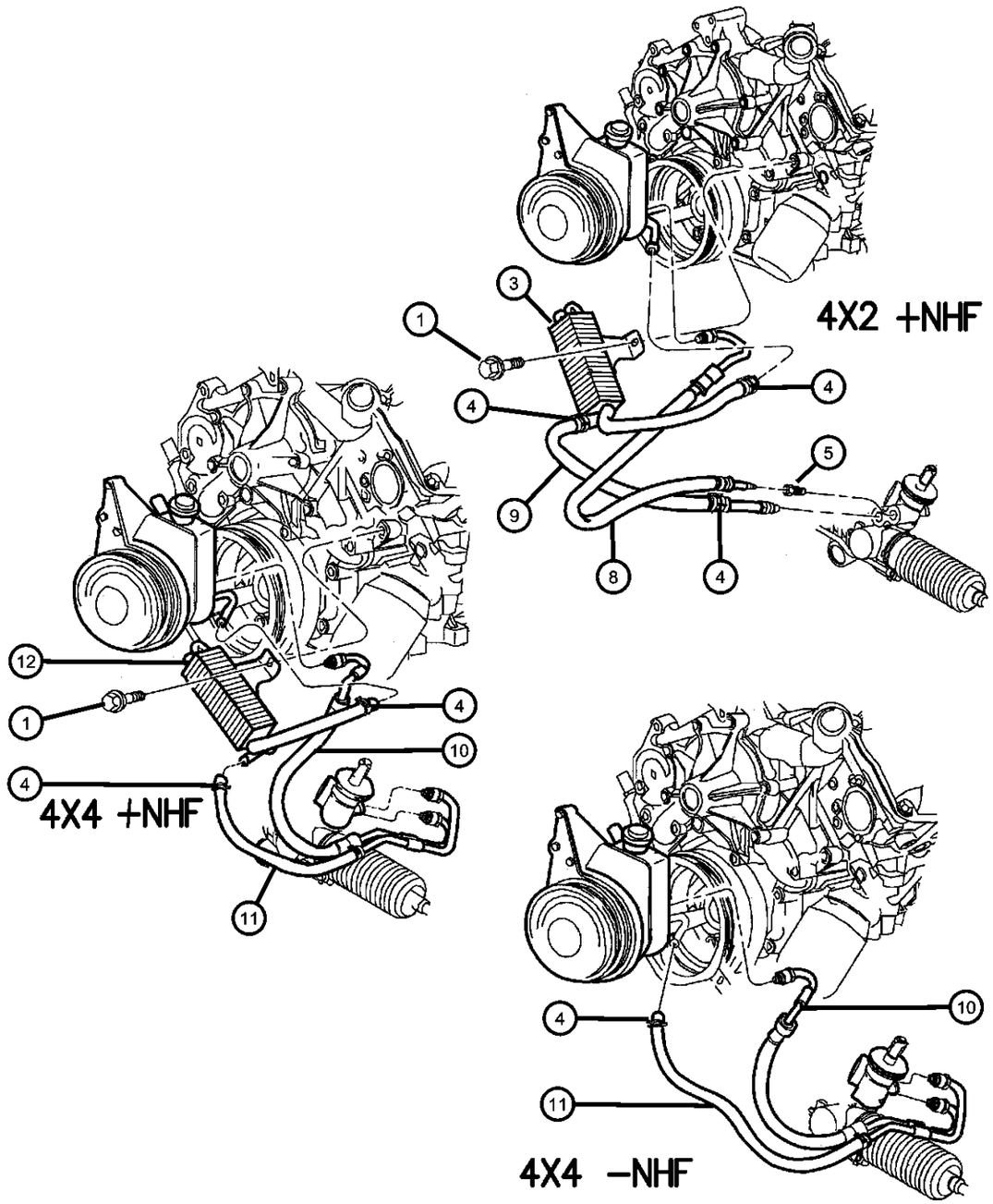

ITEM	PART NUMBER	QTY	LINE	SERIES	BODY	ENGINE	TRANS	TRIM	DESCRIPTION
Note: EH0 = All 3.9L 6 Cylinder Gas Engine, EM0 = All 5.9L 8 Cylinder Gas Engine—NHF= Power Steering Cooler—SB0=All Power Steering									
1	06022250	1				EH0, EM0			SCREW AND WASHER, Hex Head, .375-16x.75, SBO+NHF,Power Steering Cooler Mounting
-2	J4006001	2				EH0, EM0	DG0		NUT, Hex Flange, .375-16, Power Steering Cooler Mounting
3	52106102AB	1	1			EH0, EM0			HOSE AND COOLER, Power Steering, SBO+NHF
4	02448761	1							CLAMP, Hose
5	52037556	1	1						FITTING, Power Steering, Quick Connect
-6	05205254	1	1			EH0, EM0, EP0			O RING, Power Steering Hose, for Power Steering Fitting
-7	03441105	1	1						SEAL, Low Pressure Switch, for Power Steering Fitting
8	52038951AC	1	1			EH0, EM0			HOSE, Power Steering Pressure
9									HOSE, Power Steering Return
	52037828AC	1	1			EH0, EM0			SBO-NHF
	52106001AC	1	1			EH0, EM0			SBO+NHF
10	52106411AB	1	5			EH0, EM0			HOSE, Power Steering Pressure
11	52106215AF	1	5			EH0, EM0, EP0			HOSE, Power Steering Return
12	52106416AA	1	5			EH0, EM0			HOSE AND COOLER, Power Steering, Contains 52038018 Cooler
-13	52038018	1	5			EH0, EM0			COOLER, Power Steering, Cooler only

DAKOTA (AN)

SERIES	LINE	BODY	ENGINE	TRANSMISSION
L = Quad Cab L = Regular Cab L = Club Cab	1 = Dakota 2WD 5 = Dakota 4WD	31 = CLUB CAB 2-DR 6.5 FT BOX 61 = REG CAB 6.5 FT BOX 84 = CREW CAB 4-DR W.B.1	EPO = 2.5L 4 Cyl. EHO = 3.9L 6 Cyl. EMO = 5.9L 8 Cyl. EVO = 4.7L Magnum EHC = 3.9L SMPI V6 EML = 5.9L V8 MPI Engine EPE = 2.5L POWER TECH I-4 Cyl. EVA = 4.7L V8 MPI	DDC = TRANSMISSION - 5-SPEED HD MANUAL DG4 = TRANSMISSION-MULTI-SPEED AUTO, 45RFE DGK = TRANSMISSION - 4-SPD. AUTOMATIC,42RE DGT = TRANSMISSION - 4-SPD. AUTOMATIC,46RE DGO = AUTO. TRANS.

Hoses, Power Steering,4.7L Engine
Figure 19-730

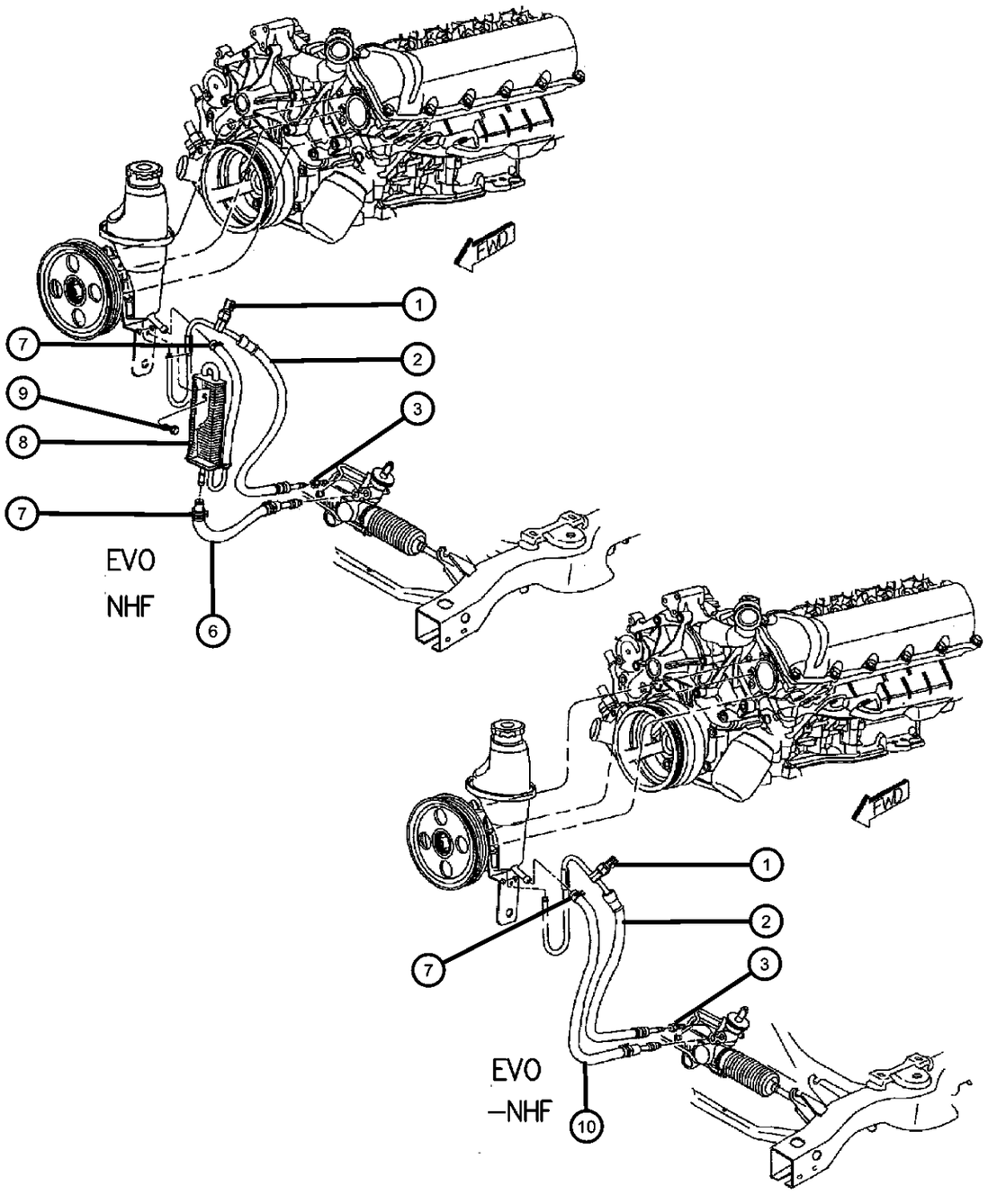

ITEM	PART NUMBER	QTY	LINE	SERIES	BODY	ENGINE	TRANS	TRIM	DESCRIPTION
Note: EV0= 4.7L Engine—SB0=Power Steering—NHF=Power Steering Cooler									
1									SWITCH, Power Steering
	56041335AA	1	5			EV0			
		1	1			EV0			
2									HOSE, Power Steering Pressure
	52106213AC	1	1			EV0			
	52106419AD	1	5			EV0			
3	52037556	1	1						FITTING, Power Steering, Quick Connect
-4	05205254	1	1						O RING, Power Steering Hose, for Power Steering Fitting
-5	03441105	1	1						SEAL, Low Pressure Switch, for Power Steering Fitting
6									HOSE, Power Steering Return
	52106735AC	1	1			EV0			+NHF
	52106944AA	1	5			EV0			+NHF
7	02448761	1				EV0			CLAMP, Hose
8	52106736AB	1				EV0			HOSE AND COOLER, Power Steering, +NHF
9	06502064	1				EV0			SCREW, Tapping, M6x1x20, +NHF,Cooler mounting
10									HOSE, Power Steering Return
	52106215AF	1	5			EV0			-NHF
	52106217AB	1	1			EV0			-NHF

DAKOTA (AN)

SERIES	LINE	BODY	ENGINE	TRANSMISSION
L = Quad Cab	1 = Dakota 2WD	31 = CLUB CAB 2-DR 6.5 FT BOX	EPO = 2.5L 4 Cyl.	DDC = TRANSMISSION - 5-SPEED HD MANUAL
L = Regular Cab	5 = Dakota 4WD	61 = REG CAB 6.5 FT BOX	EHO = 3.9L 6 Cyl.	DG4 = TRANSMISSION-MULTI-SPEED AUTO, 45RFE
L = Club Cab		84 = CREW CAB 4-DR W.B.1	EMO = 5.9L 8 Cyl.	DGK = TRANSMISSION - 4-SPD. AUTOMATIC,42RE
			EVO = 4.7L Magnum	DGT = TRANSMISSION - 4-SPD. AUTOMATIC,46RE
			EHC = 3.9L SMPI V6	DGO = AUTO. TRANS.
			EML = 5.9L V8 MPI Engine	
			EPE = 2.5L POWER TECH I-4 Cyl.	
			EVA = 4.7L V8 MPI	

Group - 42RE

Automatic Transmission 4 Speed

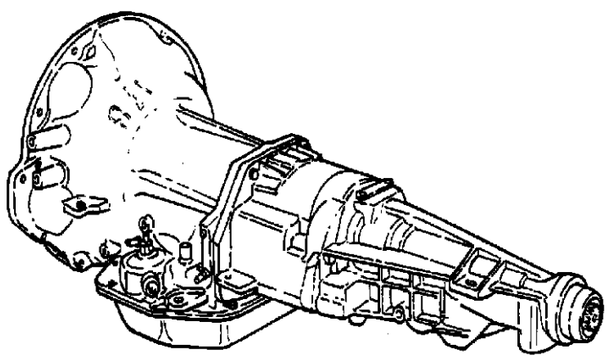

42RE-100 Transmission Assembly 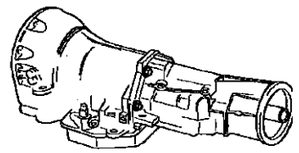	**42RE-1000** Overdrive Gear Train 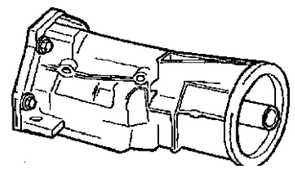	**42RE-1200** Gearshift Controls 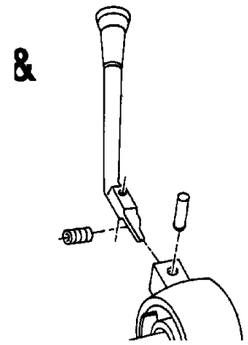	**42RE-200** Case and Extension 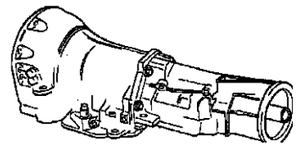
42RE-300 Oil Pump 	**42RE-400** Gear Train 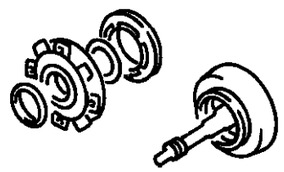	**42RE-500** Bands, Reverse and Kickdown 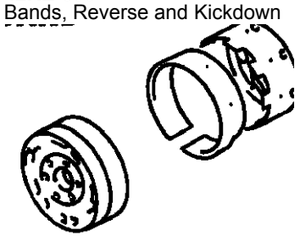	**42RE-700** Valve Body 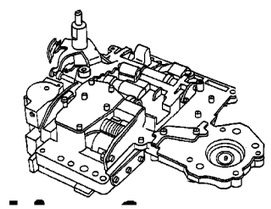

Group - 42RE Automatic Transmission 4 Speed

Illustration Title — Group-Fig. No.

Transmission Assembly
Transmission [42 RE] [DGK] ..... Fig. 42RE - 110

Case and Extension
Case and Related Parts [42 RE] [DGK] ..... Fig. 42RE - 210
Extension [42 RE] [DGK] ..... Fig. 42RE - 220

Oil Pump
Oil Pump [42 RE] [DGK] ..... Fig. 42RE - 310

Gear Train
Gear Train [42 RE] [DGK] ..... Fig. 42RE - 410
Gear Train and Intermediate [42 RE] [DGK] ..... Fig. 42RE - 420
Output Shaft [42 RE] [DGK] ..... Fig. 42RE - 430

Bands, Reverse and Kickdown
Bands [42 RE] [DGK] ..... Fig. 42RE - 510

Valve Body
Valve Body [42 RE] [DGK] ..... Fig. 42RE - 710
Servo [42 RE] [DGK] ..... Fig. 42RE - 720
Parking Sprag [42 RE] [DGK] ..... Fig. 42RE - 730

Overdrive Gear Train
Overdrive Clutch [42 RE] [DGK] ..... Fig. 42RE - 1010

Gearshift Controls
Gearshift Controls [42 RE] [DGK] ..... Fig. 42RE - 1230

Transmission [42 RE] [DGK]
Figure 42RE-110

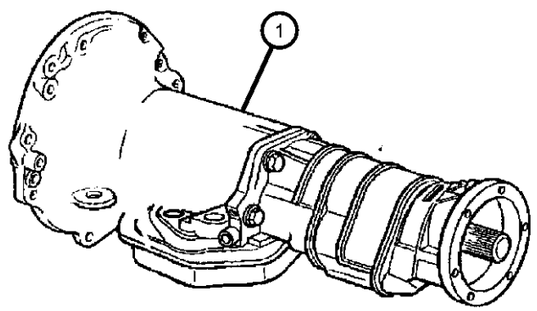

ITEM	PART NUMBER	QTY	LINE	SERIES	BODY	ENGINE	TRANS	TRIM	DESCRIPTION
NOTE:									
DGK=4 Speed Automatic Transmisson									
1									TRANSMISSION PACKAGE
	05014768AA	1	1				DGK		With Stamp # (52119834AA)
	05010125AC								Mopar Automatic Transmission Fluid Gallon
	05010124AA								Mopar Automatic Transmission Fluid Quart
	05015272AA	1	5				DGK		With Stamp # (52119835AA)
-2									OVERDRIVE
	52118154	1	5				DGK		
	52118782	1	1				DGK		

DAKOTA (AN)

SERIES	LINE	BODY	ENGINE	TRANSMISSION
L = Quad Cab L = Regular Cab L = Club Cab	1 = Dakota 2WD 5 = Dakota 4WD	31 = CLUB CAB 2-DR 6.5 FT BOX 61 = REG CAB 6.5 FT BOX 84 = CREW CAB 4-DR W.B.1	EPO = 2.5L 4 Cyl. EHO = 3.9L 6 Cyl. EMO = 5.9L 8 Cyl. EVO = 4.7L Magnum EHC = 3.9L SMPI V6 EML = 5.9L V8 MPI Engine EPE = 2.5L POWER TECH I-4 Cyl. EVA = 4.7L V8 MPI	DDC = TRANSMISSION - 5-SPEED HD MANUAL DG4 = TRANSMISSION-MULTI-SPEED AUTO, 45RFE DGK = TRANSMISSION - 4-SPD. AUTOMATIC,42RE DGT = TRANSMISSION - 4-SPD. AUTOMATIC,46RE DGO = AUTO. TRANS.

Case and Related Parts [42 RE] [DGK]
Figure 42RE-210

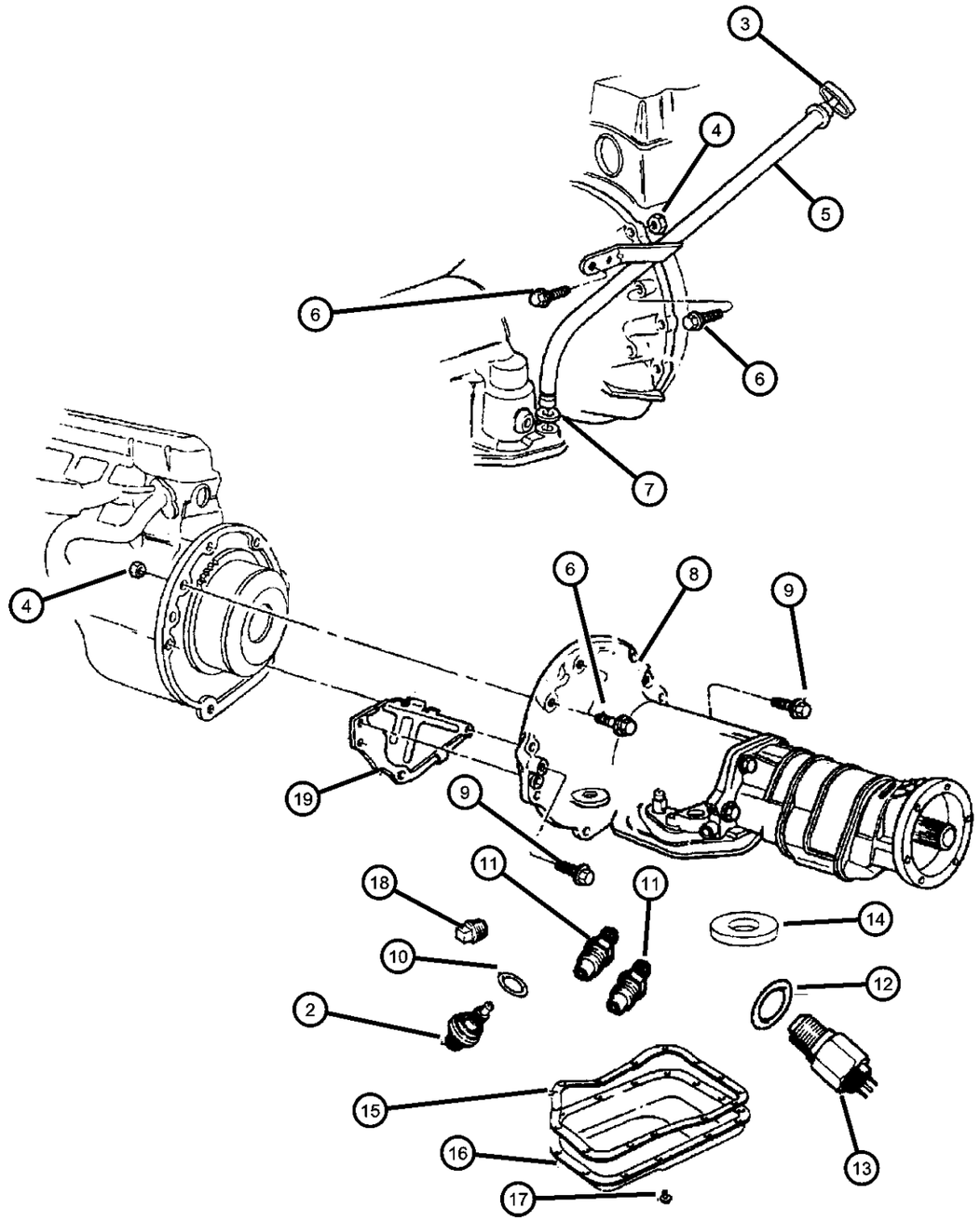

ITEM	PART NUMBER	QTY	LINE	SERIES	BODY	ENGINE	TRANS	TRIM	DESCRIPTION
NOTE:									
Sales Codes:									
ECH=3.9L V-6 Engine									
DGK=4 Speed Automatic Transmission									
DG0=All 4 Speed Automatic Transmissions									
-1									SEAL AND GASKET PACKAGE, Transmission
	04863907AD	1	1				DGK		
		1	5				DGK		
2									SENSOR, Transmission Output Speed
	04412879	1	1				DGK		
		1	5				DGK		
3	52107769AA	1					DGK, DGT		INDICATOR, Transmission Fluid Level
4	06025021	1	1				DGK, DGT		NUT, Hex, .437-14
5	52107689AE	1					DGK		TUBE, Oil Filler
6	06022266	4					DG0		SCREW, Hex Head, .375-16x1.5
7	52118629AB	1					DGK, DGT		SEAL, Oil Filler Tube
8									CASE, Transmission
	52118175	1	1				DGK		
	52118176	1	5				DGK		
9	06024473	2					DG0		SCREW AND WASHER, Hex Head, .437-14x2.00
10									O RING, Trans Speed Sensor
	06501701	1	1				DGK		
		1	5				DGK		
11									NUT, Inverted Flare, .62-18
	06033879	2	1				DGK		
		2	5				DGK		
12									WASHER, Switch
	02408143	1	1				DGK		
		1	5				DGK		
13									SWITCH, Neutral, Safety, Back Up
	56028181AB	1	1				DGK		
		1	5				DGK		

DAKOTA (AN)

SERIES	LINE	BODY	ENGINE	TRANSMISSION
L = Quad Cab	1 = Dakota 2WD	31 = CLUB CAB 2-DR 6.5 FT BOX	EPO = 2.5L 4 Cyl.	DDC = TRANSMISSION - 5-SPEED HD MANUAL
L = Regular Cab	5 = Dakota 4WD	61 = REG CAB 6.5 FT BOX	EHO = 3.9L 6 Cyl.	DG4 = TRANSMISSION-MULTI-SPEED AUTO, 45RFE
L = Club Cab		84 = CREW CAB 4-DR W.B.1	EMO = 5.9L 8 Cyl.	DGK = TRANSMISSION - 4-SPD. AUTOMATIC,42RE
			EVO = 4.7L Magnum	DGT = TRANSMISSION - 4-SPD. AUTOMATIC,46RE
			EHC = 3.9L SMPI V6	DGO = AUTO. TRANS.
			EML = 5.9L V8 MPI Engine	
			EPE = 2.5L POWER TECH I-4 Cyl.	
			EVA = 4.7L V8 MPI	

Case and Related Parts [42 RE] [DGK]
Figure 42RE-210

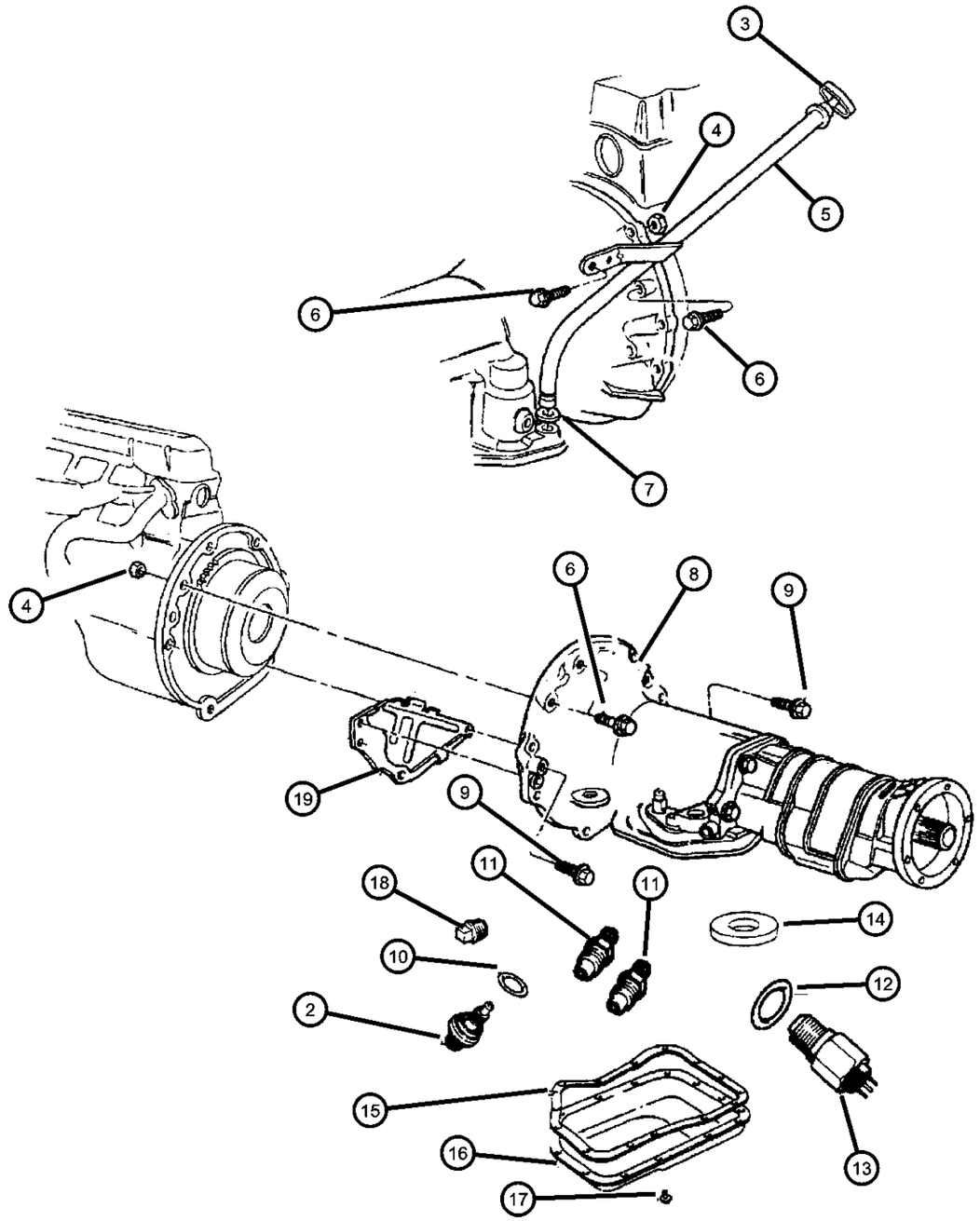

ITEM	PART NUMBER	QTY	LINE	SERIES	BODY	ENGINE	TRANS	TRIM	DESCRIPTION
14	03681601	1	1				DGK		MAGNET, Transmission
15									GASKET, Oil Pan
	04295875	1	1				DGK		
		1	5				DGK		
16									PAN, Transmission Oil
	52118779AB	1	1				DGK		
		1	5				DGK		
17									SCREW AND WASHER, Hex Head, .312-18x.625
	04723548	12	1				DGK		
		12	5				DGK		
18	06028095	1	1				DGK		PLUG, Pressure Check
19									COVER, Converter
	52117754	1	5				DGK		
	52117755	1	1				DGK		
-20	52117771	1	1				DGK, DGT		STRUT, Transmission to Block
-21	52117772	1	1				DGK, DGT		STRUT, Transmission to Block

DAKOTA (AN)

SERIES	LINE	BODY	ENGINE	TRANSMISSION
L = Quad Cab	1 = Dakota 2WD	31 = CLUB CAB 2-DR 6.5 FT BOX	EPO = 2.5L 4 Cyl.	DDC = TRANSMISSION - 5-SPEED HD MANUAL
L = Regular Cab	5 = Dakota 4WD	61 = REG CAB 6.5 FT BOX	EHO = 3.9L 6 Cyl.	DG4 = TRANSMISSION-MULTI-SPEED AUTO, 45RFE
L = Club Cab		84 = CREW CAB 4-DR W.B.1	EMO = 5.9L 8 Cyl.	DGK = TRANSMISSION - 4-SPD. AUTOMATIC,42RE
			EVO = 4.7L Magnum	DGT = TRANSMISSION - 4-SPD. AUTOMATIC,46RE
			EHC = 3.9L SMPI V6	DGO = AUTO. TRANS.
			EML = 5.9L V8 MPI Engine	
			EPE = 2.5L POWER TECH I-4 Cyl.	
			EVA = 4.7L V8 MPI	

AR = use ase required - = Non illustrrated part

Extension [42 RE] [DGK]
Figure 42RE-220

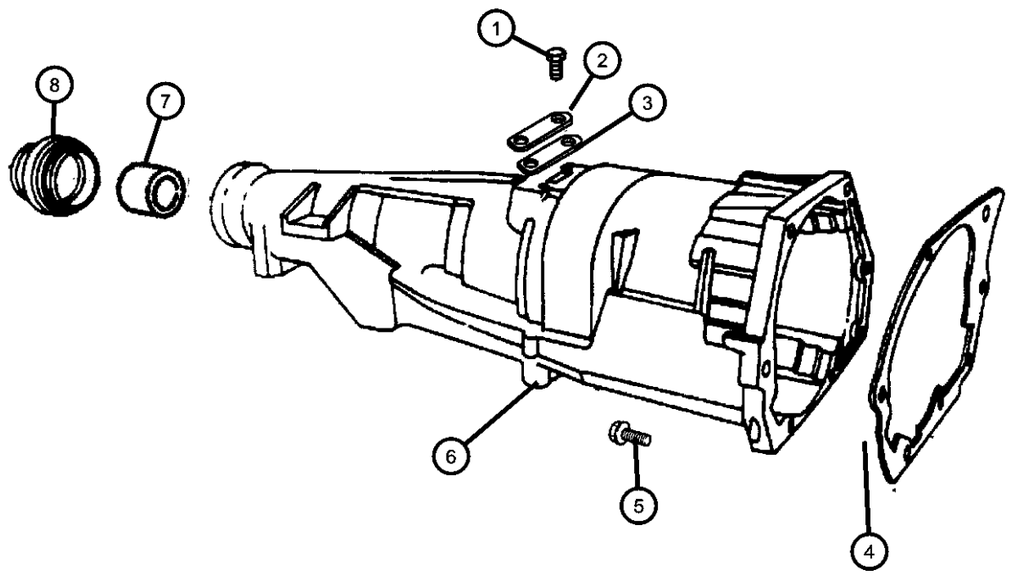

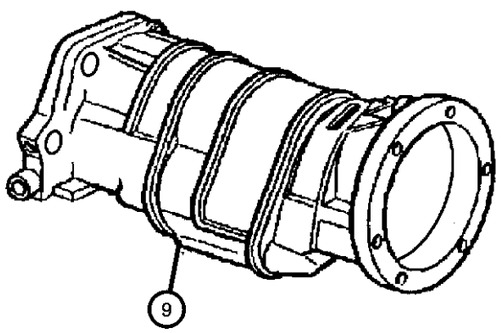

ITEM	PART NUMBER	QTY	LINE	SERIES	BODY	ENGINE	TRANS	TRIM	DESCRIPTION
NOTE:									
Sales Codes:									
EHC = 3.9L MAGNUM V6 Engine									
DGK=4 Speed Automatic Transmission									
1	52117772	1							SCREW, (NOT SERVICED)
2	02466957	1	1				DGK		COVER, Transmission Converter
3	02801398	1	1				DGK		GASKET, Transmission
4	04471564	1	1				DGK		GASKET, Overdrive Piston Retainer
5	06036046AA	7	1				DGK		SCREW, Hex Flange Head, .375-16x1.38
6	05003231AA	1	1				DGK		CASE, Transmission Rear, With Stamp # (52119834AA)
7	05003231AA	1							BUSHING, (NOT SERVICED)
8	04531216	1	1				DGK		SEAL, Extension Yoke
9	04797342	1	5				DGK		ADAPTER, Transfer Case
-10	04269956	1	5				DGK		SEAL, Adapter

DAKOTA (AN)

SERIES	LINE	BODY	ENGINE	TRANSMISSION
L = Quad Cab	1 = Dakota 2WD	31 = CLUB CAB 2-DR 6.5 FT BOX	EPO = 2.5L 4 Cyl.	DDC = TRANSMISSION - 5-SPEED HD MANUAL
L = Regular Cab	5 = Dakota 4WD	61 = REG CAB 6.5 FT BOX	EHO = 3.9L 6 Cyl.	DG4 = TRANSMISSION-MULTI-SPEED AUTO, 45RFE
L = Club Cab		84 = CREW CAB 4-DR W.B.1	EMO = 5.9L 8 Cyl.	DGK = TRANSMISSION - 4-SPD. AUTOMATIC,42RE
			EVO = 4.7L Magnum	DGT = TRANSMISSION - 4-SPD. AUTOMATIC,46RE
			EHC = 3.9L SMPI V6	DGO = AUTO. TRANS.
			EML = 5.9L V8 MPI Engine	
			EPE = 2.5L POWER TECH I-4 Cyl.	
			EVA = 4.7L V8 MPI	

Oil Pump [42 RE] [DGK]
Figure 42RE-310

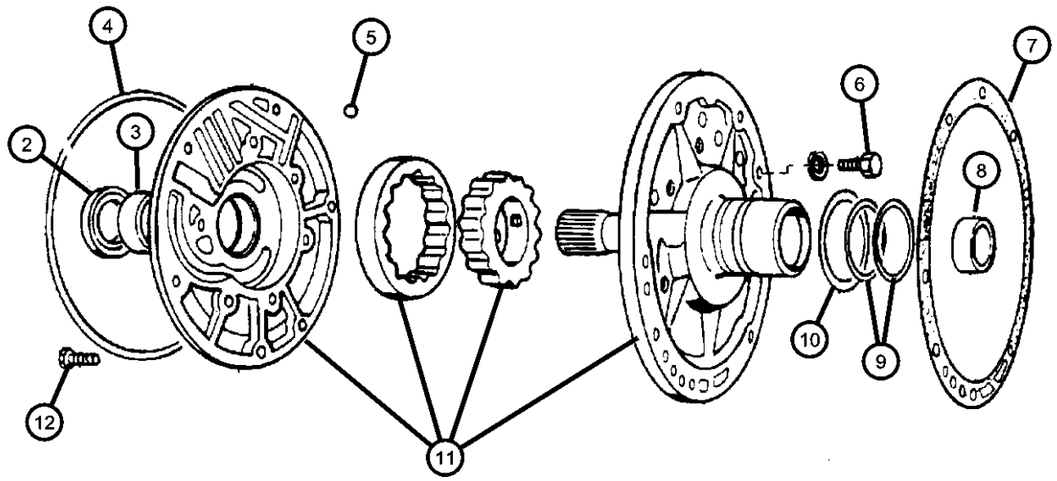

ITEM	PART NUMBER	QTY	LINE	SERIES	BODY	ENGINE	TRANS	TRIM	DESCRIPTION
NOTE: Sales Codes: EHC = 3.9L MAGNUM V6 Engine DGK=4 Speed Automatic Transmission									
-1	04713108AB	1	1				DGK		GASKET AND SEAL PACKAGE, Transmission Oil Pump
2									SEAL, Impeller Hub, 57.25mm OD
	04412475	1	1				DGK		
		1	5				DGK		
3									BUSHING, Front Pump
	02466796	1	1				DGK		
		1	5				DGK		
4									SEAL, Front Pump Housing
	02204709	1	1				DGK		
		1	5				DGK		
5									BALL, Valve Body Check
	00104918	3	1				DGK		
		3	5				DGK		
6									SCREW, Hex Head, .312-18x.687
	00179815	6	1				DGK		
		6	5				DGK		
7									GASKET, Transmission Oil Pump
	52118266	1	1				DGK		
		1	5				DGK		
8									BUSHING, Reaction Shaft
	04058635	1	1				DGK		
		1	5				DGK		
9									SEAL, Ring Reaction Support, 2 1/16 O.D.
	04471874	2	1				DGK		
		2	5				DGK		
10									THRUST WASHER, Front Clutch
	04617786	1	1				DGK		
		1	5				DGK		

DAKOTA (AN)

SERIES	LINE	BODY	ENGINE	TRANSMISSION
L = Quad Cab L = Regular Cab L = Club Cab	1 = Dakota 2WD 5 = Dakota 4WD	31 = CLUB CAB 2-DR 6.5 FT BOX 61 = REG CAB 6.5 FT BOX 84 = CREW CAB 4-DR W.B.1	EPO = 2.5L 4 Cyl. EHO = 3.9L 6 Cyl. EMO = 5.9L 8 Cyl. EVO = 4.7L Magnum EHC = 3.9L SMPI V6 EML = 5.9L V8 MPI Engine EPE = 2.5L POWER TECH I-4 Cyl. EVA = 4.7L V8 MPI	DDC = TRANSMISSION - 5-SPEED HD MANUAL DG4 = TRANSMISSION-MULTI-SPEED AUTO, 45RFE DGK = TRANSMISSION - 4-SPD. AUTOMATIC,42RE DGT = TRANSMISSION - 4-SPD. AUTOMATIC,46RE DGO = AUTO. TRANS.

Oil Pump [42 RE] [DGK]
Figure 42RE-310

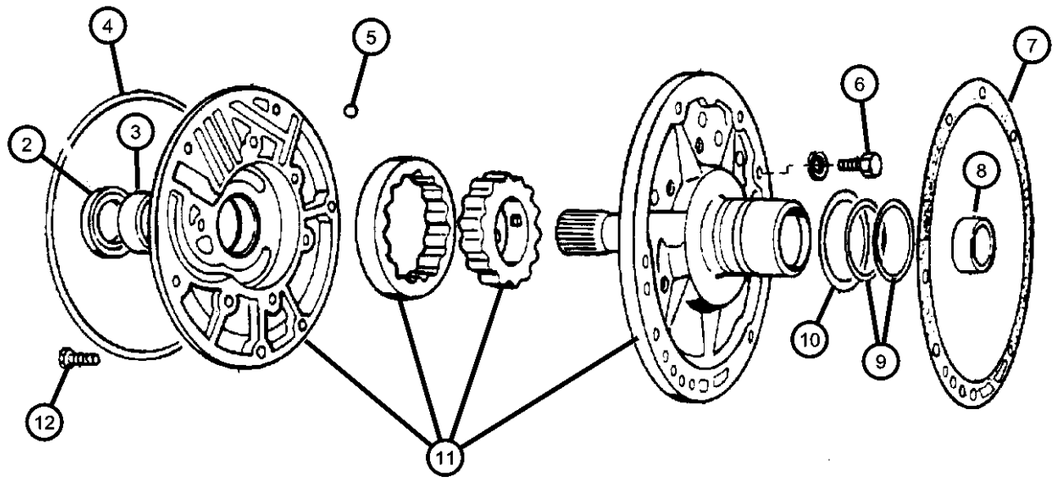

ITEM	PART NUMBER	QTY	LINE	SERIES	BODY	ENGINE	TRANS	TRIM	DESCRIPTION
11									PUMP, Transmission Oil
	04778552AB	1	1				DGK		
		1	5				DGK		
12									SCREW AND WASHER, Hex Flange Head, .312-18x1.375
	06023943	6	1				DGK		
		6	5				DGK		

DAKOTA (AN)

SERIES	LINE	BODY	ENGINE	TRANSMISSION
L = Quad Cab L = Regular Cab L = Club Cab	1 = Dakota 2WD 5 = Dakota 4WD	31 = CLUB CAB 2-DR 6.5 FT BOX 61 = REG CAB 6.5 FT BOX 84 = CREW CAB 4-DR W.B.1	EPO = 2.5L 4 Cyl. EHO = 3.9L 6 Cyl. EMO = 5.9L 8 Cyl. EVO = 4.7L Magnum EHC = 3.9L SMPI V6 EML = 5.9L V8 MPI Engine EPE = 2.5L POWER TECH I-4 Cyl. EVA = 4.7L V8 MPI	DDC = TRANSMISSION - 5-SPEED HD MANUAL DG4 = TRANSMISSION-MULTI-SPEED AUTO, 45RFE DGK = TRANSMISSION - 4-SPD. AUTOMATIC,42RE DGT = TRANSMISSION - 4-SPD. AUTOMATIC,46RE DGO = AUTO. TRANS.

Gear Train [42 RE] [DGK]
Figure 42RE-410

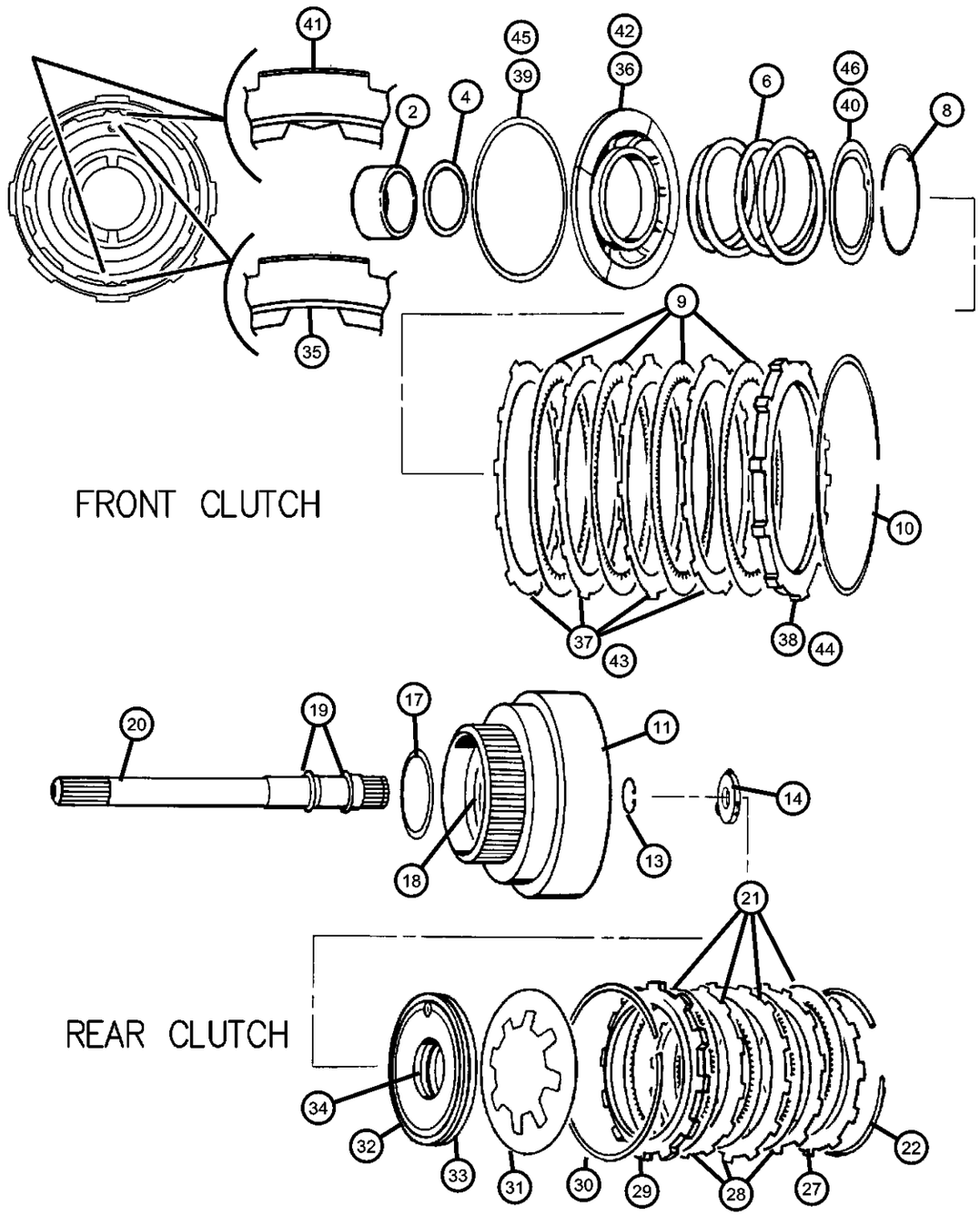

ITEM	PART NUMBER	QTY	LINE	SERIES	BODY	ENGINE	TRANS	TRIM	DESCRIPTION
NOTE:									
Sales Codes:									
EHC = 3.9L MAGNUM V6 Engine									
-1									SEAL PACKAGE, Transmission Clutch
	05252926AB	1	1				DGK		
		1	5				DGK		
2									BUSHING, Front Clutch
	04617157	1	1				DGK		Front
		1	5				DGK		Front
-3									BUSHING, Rear Clutch
	04617159	1	1				DGK		
		1	5				DGK		
4									SEAL, Front Clutch Piston
	03515176	1	1				DGK		
		1	5				DGK		
-5									CHECK BALL, Dia-.187
	00147483	1	1				DGK		3/16 Diameter
		1	5				DGK		3/16 Diameter
6									SPRING, Front Clutch
	03515054	1	1				DGK		
		1	5				DGK		
-7									CHECK BALL, Dia-.187
	00147483	1	1				DGK		
		1	5				DGK		
8									SNAP RING
	01942400	1	1				DGK		
		1	5				DGK		
9									DISC, Direct Clutch
	04617362	4	1				DGK		
		4	5				DGK		
10									SNAP RING
	03410571	1	1				DGK		

DAKOTA (AN)

SERIES	LINE	BODY	ENGINE	TRANSMISSION
L = Quad Cab	1 = Dakota 2WD	31 = CLUB CAB 2-DR 6.5 FT BOX	EPO = 2.5L 4 Cyl.	DDC = TRANSMISSION - 5-SPEED HD MANUAL
L = Regular Cab	5 = Dakota 4WD	61 = REG CAB 6.5 FT BOX	EHO = 3.9L 6 Cyl.	DG4 = TRANSMISSION-MULTI-SPEED AUTO, 45RFE
L = Club Cab		84 = CREW CAB 4-DR W.B.1	EMO = 5.9L 8 Cyl.	DGK = TRANSMISSION - 4-SPD. AUTOMATIC,42RE
			EVO = 4.7L Magnum	DGT = TRANSMISSION - 4-SPD. AUTOMATIC,46RE
			EHC = 3.9L SMPI V6	DGO = AUTO. TRANS.
			EML = 5.9L V8 MPI Engine	
			EPE = 2.5L POWER TECH I-4 Cyl.	
			EVA = 4.7L V8 MPI	

AR = use ase required - = Non illustrrated part

<< RETURN TO GROUP INDEX

Gear Train [42 RE] [DGK]
Figure 42RE-410

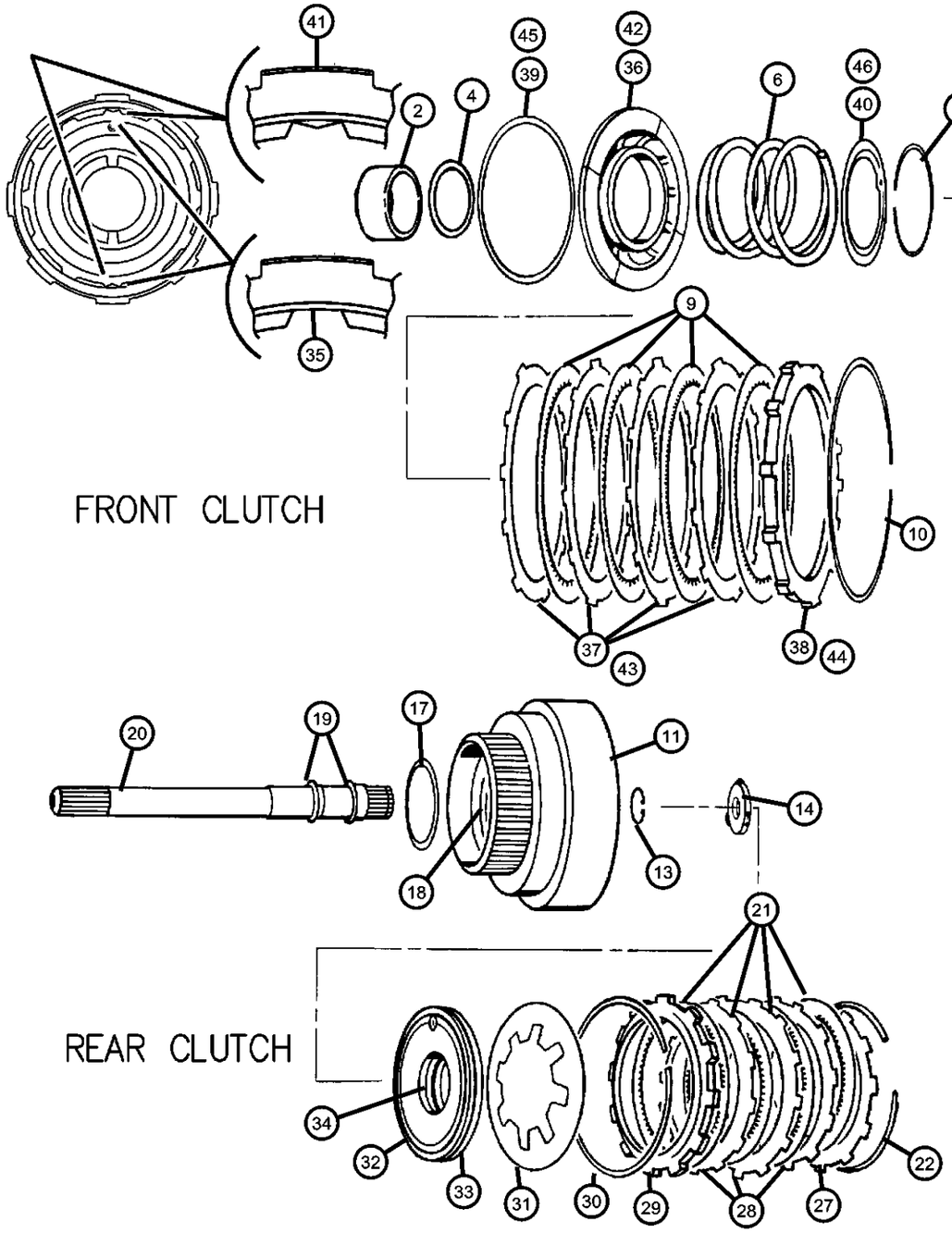

ITEM	PART NUMBER	QTY	LINE	SERIES	BODY	ENGINE	TRANS	TRIM	DESCRIPTION
		1	5				DGK		
11									RETAINER, Transmission Rear Clutch
	04505199	1	1				DGK		
		1	5				DGK		
-12									CHECK BALL, Dia-.187
	00147483	1	1				DGK		
		1	5				DGK		
13									SNAP RING, .890625
	06022859	1	1				DGK		
		1	5				DGK		
14									THRUST WASHER, Output Shaft, Gray .052
	04505185	1	1				DGK		
		1	5				DGK		
-15									THRUST WASHER, Output Shaft, Red .068
	04505186	1	1				DGK		
		1	5				DGK		
-16									THRUST WASHER, Output Shaft, Green .083
	04505187	1	1				DGK		
		1	5				DGK		
17									THRUST WASHER, Front Clutch
	04617786	1	1				DGK		
		1	5				DGK		
18									SEAL, Rear Clutch, 1.50 ODx.009 Thk
	04028333	1	1				DGK		
		1	5				DGK		
19									SEAL, Input Shaft
	01401221AB	1	1				DGK		
		1	5				DGK		
20									INPUT SHAFT, Transmission

DAKOTA (AN)

SERIES	LINE	BODY	ENGINE	TRANSMISSION
L = Quad Cab L = Regular Cab L = Club Cab	1 = Dakota 2WD 5 = Dakota 4WD	31 = CLUB CAB 2-DR 6.5 FT BOX 61 = REG CAB 6.5 FT BOX 84 = CREW CAB 4-DR W.B.1	EPO = 2.5L 4 Cyl. EHO = 3.9L 6 Cyl. EMO = 5.9L 8 Cyl. EVO = 4.7L Magnum EHC = 3.9L SMPI V6 EML = 5.9L V8 MPI Engine EPE = 2.5L POWER TECH I-4 Cyl. EVA = 4.7L V8 MPI	DDC = TRANSMISSION - 5-SPEED HD MANUAL DG4 = TRANSMISSION-MULTI-SPEED AUTO, 45RFE DGK = TRANSMISSION - 4-SPD. AUTOMATIC,42RE DGT = TRANSMISSION - 4-SPD. AUTOMATIC,46RE DGO = AUTO. TRANS.

Gear Train [42 RE] [DGK]
Figure 42RE-410

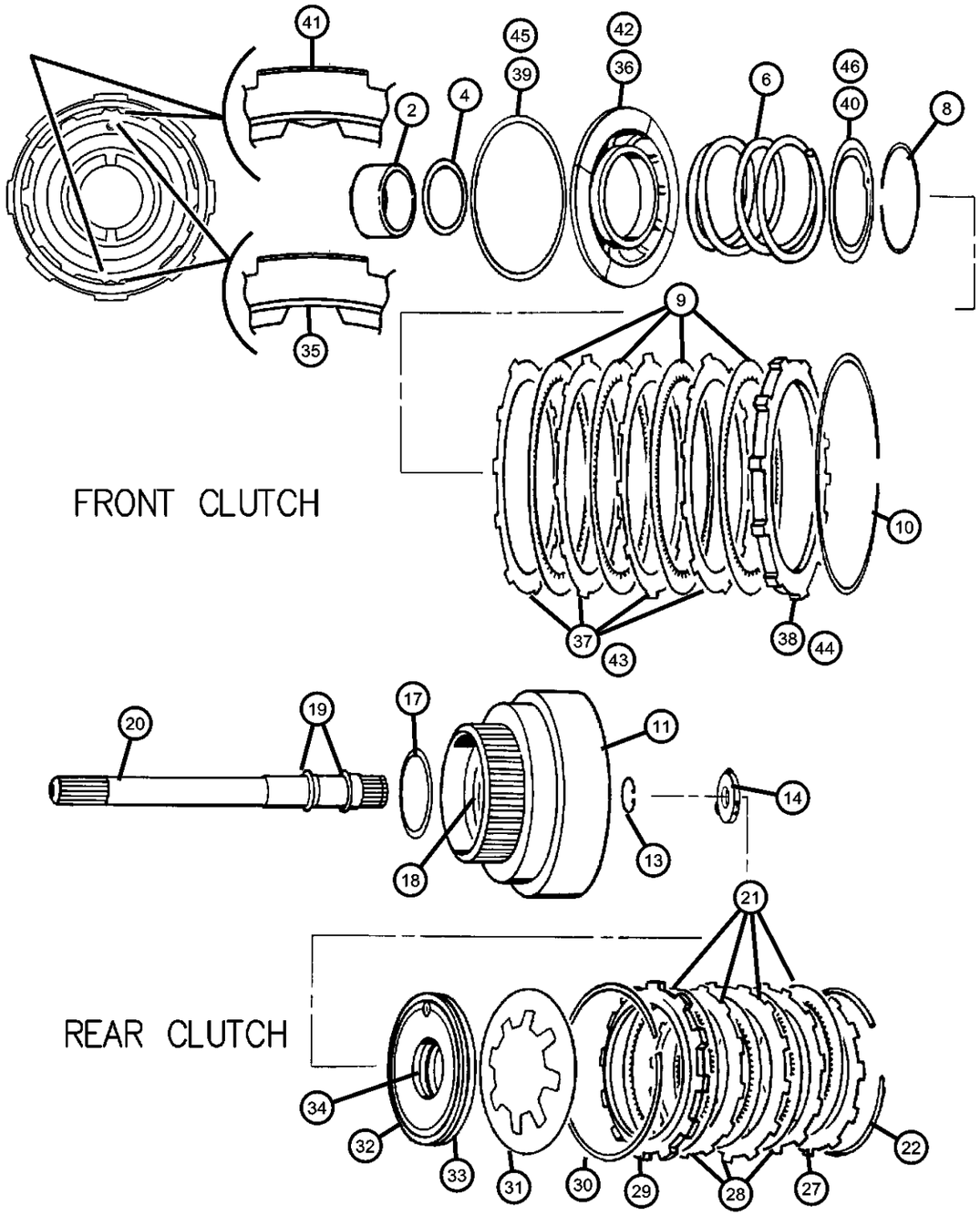

ITEM	PART NUMBER	QTY	LINE	SERIES	BODY	ENGINE	TRANS	TRIM	DESCRIPTION
	04505189	1	1				DGK		
		1	5				DGK		
21									DISC, Clutch
	04713880	4	1				DGK		
		4	5				DGK		
22									SNAP RING
	04130761	1	1				DGK		
		1	5				DGK		
-23									SNAP RING, Rear Clutch, .076
	04539121	1	1				DGK		
		1	5				DGK		
-24									SNAP RING, Rear Clutch, .098
	04539122	1	1				DGK		
		1	5				DGK		
-25									SNAP RING, Rear Clutch, .095
	04539123	1	1				DGK		
		1	5				DGK		
-26									SNAP RING, Rear Clutch, .107
	04539124	1	1				DGK		
		1	5				DGK		
27									PLATE, Transmission Clutch Reaction
	04617176	1	1				DGK		Up to 01/07/00
		1	5				DGK		Up to 01/07/00
	04617176AB	1	1				DGK		After 01/07/00
		1	5				DGK		After 01/07/00
28									PLATE, Clutch Separator
	01942403AB	3	1				DGK		Up to 01/07/00 - Without [V] Notch
		3	5				DGK		Up to 01/07/00 - Without [V] Notch
	01942403AC	4	1				DGK		After 01/07/00 - With [V] Notch
		4	5				DGK		After 01/07/00 - With [V] Notch

DAKOTA (AN)

SERIES	LINE	BODY	ENGINE	TRANSMISSION
L = Quad Cab L = Regular Cab L = Club Cab	1 = Dakota 2WD 5 = Dakota 4WD	31 = CLUB CAB 2-DR 6.5 FT BOX 61 = REG CAB 6.5 FT BOX 84 = CREW CAB 4-DR W.B.1	EPO = 2.5L 4 Cyl. EHO = 3.9L 6 Cyl. EMO = 5.9L 8 Cyl. EVO = 4.7L Magnum EHC = 3.9L SMPI V6 EML = 5.9L V8 MPI Engine EPE = 2.5L POWER TECH I-4 Cyl. EVA = 4.7L V8 MPI	DDC = TRANSMISSION - 5-SPEED HD MANUAL DG4 = TRANSMISSION-MULTI-SPEED AUTO, 45RFE DGK = TRANSMISSION - 4-SPD. AUTOMATIC,42RE DGT = TRANSMISSION - 4-SPD. AUTOMATIC,46RE DGO = AUTO. TRANS.

AR = use ase required - = Non illustrrated part

<< RETURN TO GROUP INDEX

Gear Train [42 RE] [DGK]
Figure 42RE-410

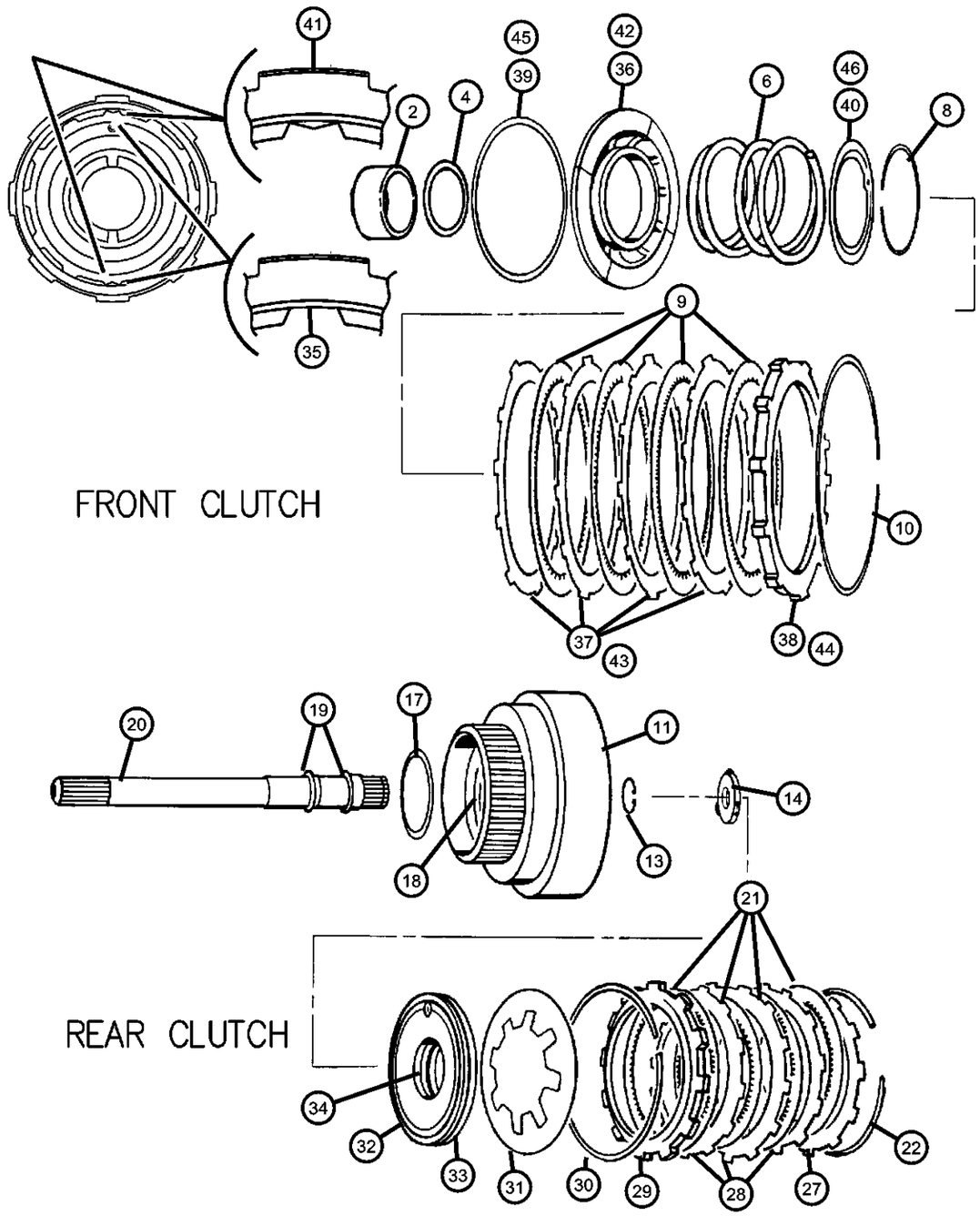

ITEM	PART NUMBER	QTY	LINE	SERIES	BODY	ENGINE	TRANS	TRIM	DESCRIPTION
29									PLATE, Clutch Pressure
	02466281	1	1				DGK		
		1	5				DGK		
30									SPRING, Rear Clutch
	02466283	1	1				DGK		
		1	5				DGK		
31									SPRING, Rear Clutch Piston
	04728487	1	1				DGK		
		1	5				DGK		
32									SEAL, Rear Clutch Piston
	02538695	1	1				DGK		
		1	5				DGK		
33									PISTON, Clutch
	03515716	1	1				DGK		
		1	5				DGK		
34									SEAL, Rear Clutch Piston
	02538510	1	1				DGK		
		1	5				DGK		
35									RETAINER AND BUSHING, Transmission Front Clutch, Up to 01/07/00
	04531285	1	5				DGK		
		1	1				DGK		
36									PISTON, Clutch
	04617154	1	1				DGK		
		1	5				DGK		
37									PLATE, Clutch Separator
	01942403AB	4	1				DGK		Without [V] Notch
		4	5				DGK		Without [V] Notch
	01942403AC	4	1				DGK		With [V] Notch
		4	5				DGK		With [V] Notch
38									PLATE, Transmission Clutch Reaction

DAKOTA (AN)

SERIES	LINE	BODY	ENGINE	TRANSMISSION
L = Quad Cab	1 = Dakota 2WD	31 = CLUB CAB 2-DR 6.5 FT BOX	EPO = 2.5L 4 Cyl.	DDC = TRANSMISSION - 5-SPEED HD MANUAL
L = Regular Cab	5 = Dakota 4WD	61 = REG CAB 6.5 FT BOX	EHO = 3.9L 6 Cyl.	DG4 = TRANSMISSION-MULTI-SPEED AUTO, 45RFE
L = Club Cab		84 = CREW CAB 4-DR W.B.1	EMO = 5.9L 8 Cyl.	DGK = TRANSMISSION - 4-SPD. AUTOMATIC,42RE
			EVO = 4.7L Magnum	DGT = TRANSMISSION - 4-SPD. AUTOMATIC,46RE
			EHC = 3.9L SMPI V6	DGO = AUTO. TRANS.
			EML = 5.9L V8 MPI Engine	
			EPE = 2.5L POWER TECH I-4 Cyl.	
			EVA = 4.7L V8 MPI	

AR = use ase required - = Non illustrrated part

Gear Train [42 RE] [DGK]
Figure 42RE-410

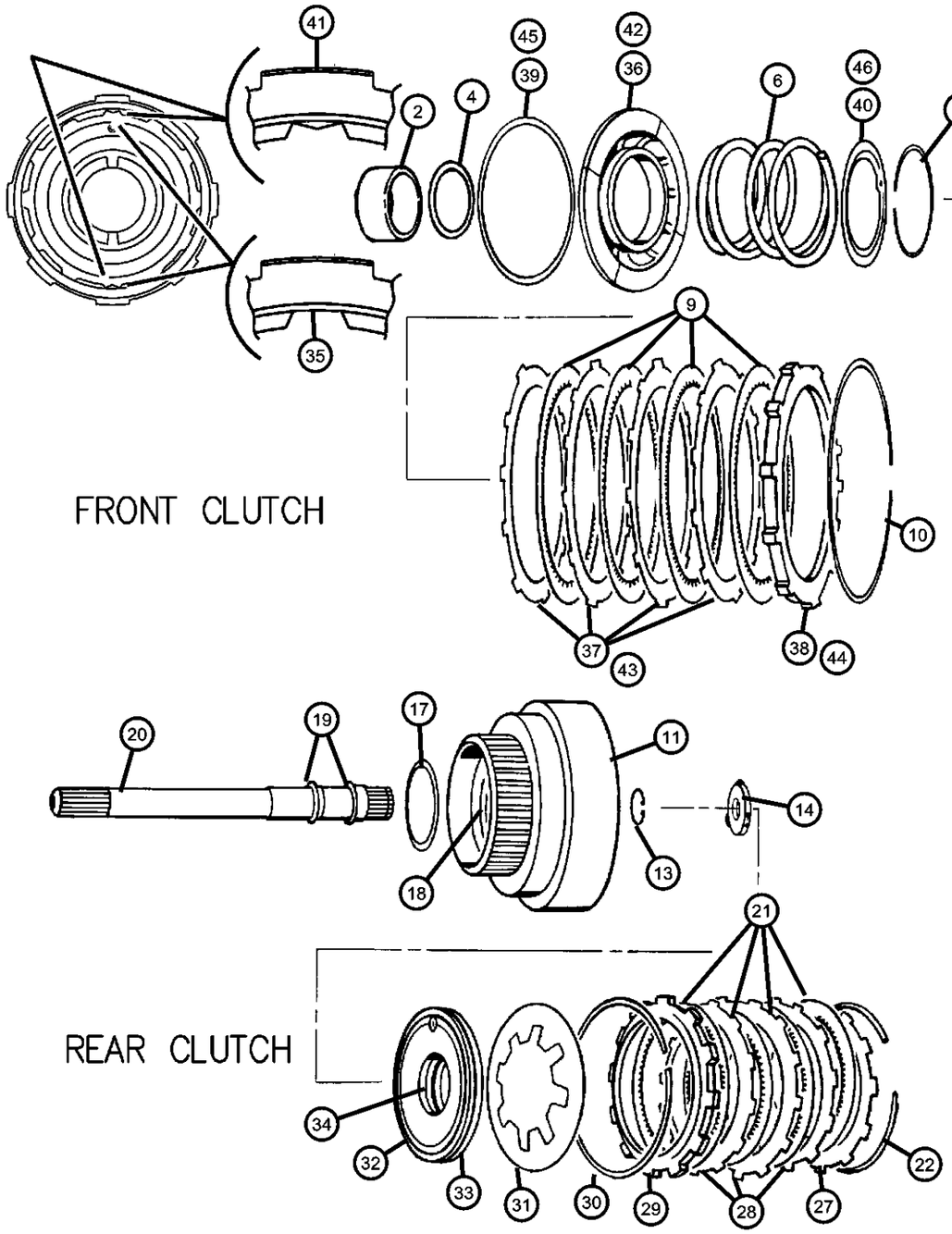

ITEM	PART NUMBER	QTY	LINE	SERIES	BODY	ENGINE	TRANS	TRIM	DESCRIPTION
	04617176	1	1				DGK		
		1	5				DGK		
39									SEAL, Front Piston Clutch
	04058487	1	5				DGK		
		1	1				DGK		
40									RETAINER, Transmission Front Clutch Piston Spring
	04617516AB	1	1				DGK		
		1	5				DGK		
41									RETAINER AND BUSHING, Transmission Front Clutch, After 01/07/00
	04531285AB	1	1				DGK		
		1	5				DGK		
42									PISTON, Clutch
	04617154AB	1	1				DGK		
		1	5				DGK		
43									PLATE, Clutch Separator
	01942403AC	4	5				DGK		
		4	1				DGK		
44									PLATE, Transmission Clutch Reaction
	04617176AB	1	1				DGK		
		1	5				DGK		
45									SEAL, Front Piston Clutch
	04058487AB	1	1				DGK		
		1	5				DGK		
46									RETAINER, Transmission Front Clutch Piston Spring
	04617516AC	1	1				DGK		
		1	5				DGK		

DAKOTA (AN)

SERIES	LINE	BODY	ENGINE	TRANSMISSION
L = Quad Cab L = Regular Cab L = Club Cab	1 = Dakota 2WD 5 = Dakota 4WD	31 = CLUB CAB 2-DR 6.5 FT BOX 61 = REG CAB 6.5 FT BOX 84 = CREW CAB 4-DR W.B.1	EPO = 2.5L 4 Cyl. EHO = 3.9L 6 Cyl. EMO = 5.9L 8 Cyl. EVO = 4.7L Magnum EHC = 3.9L SMPI V6 EML = 5.9L V8 MPI Engine EPE = 2.5L POWER TECH I-4 Cyl. EVA = 4.7L V8 MPI	DDC = TRANSMISSION - 5-SPEED HD MANUAL DG4 = TRANSMISSION-MULTI-SPEED AUTO, 45RFE DGK = TRANSMISSION - 4-SPD. AUTOMATIC,42RE DGT = TRANSMISSION - 4-SPD. AUTOMATIC,46RE DGO = AUTO. TRANS.

Gear Train and Intermediate [42 RE] [DGK]
Figure 42RE-420

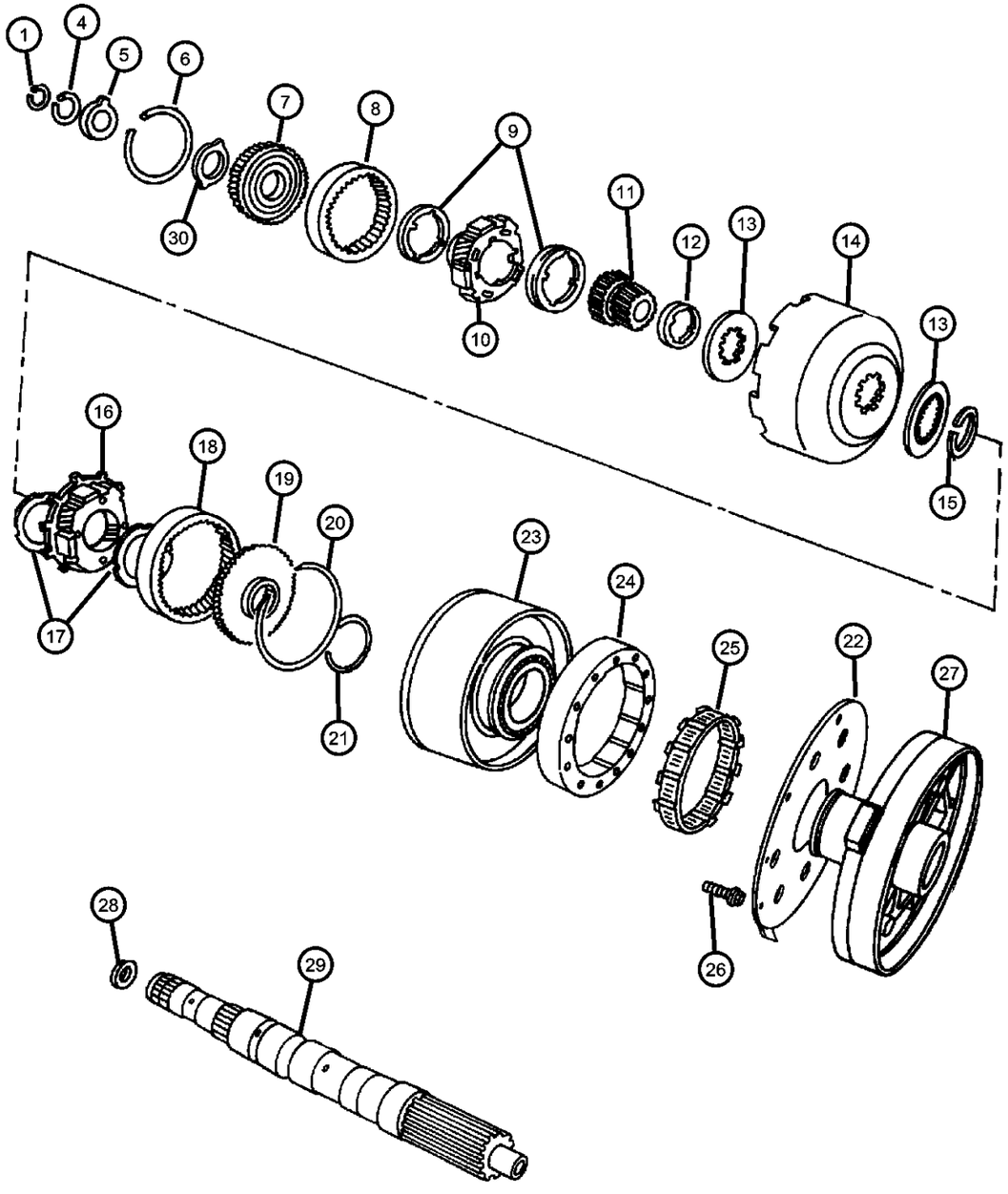

ITEM	PART NUMBER	QTY	LINE	SERIES	BODY	ENGINE	TRANS	TRIM	DESCRIPTION
NOTE: DGK= 42RE Automatic Transmission									
1									SNAP RING, .946 ID
	06026289	1	1				DGK		
		1	5				DGK		
-2									SNAP RING
	06030938	1	1				DGK		
		1	5				DGK		
-3									SNAP RING, Output Shaft, 1.029 OD
	06030404	1	1				DGK		
		1	5				DGK		
4									SNAP RING, Annulus Gear, 1.375 ID
	06030576	1	1				DGK		
		1	5				DGK		
5									THRUST WASHER, Annulus Gear
	03681969	1	1				DGK		
		1	5				DGK		
6									SNAP RING
	06035238	1	1				DGK		
		1	5				DGK		
7									SUPPORT, Annulus Gear
	04617774	1	1				DGK		
		1	5				DGK		
8									GEAR, Front Annulus
	04130512	1	1				DGK		
		1	5				DGK		
9									THRUST WASHER, Planetary Carrier
	04130518	2	1				DGK		
		2	5				DGK		
10									CARRIER, Planetary Pinion
	04130514	1	1				DGK		

DAKOTA (AN)

SERIES	LINE	BODY	ENGINE	TRANSMISSION
L = Quad Cab L = Regular Cab L = Club Cab	1 = Dakota 2WD 5 = Dakota 4WD	31 = CLUB CAB 2-DR 6.5 FT BOX 61 = REG CAB 6.5 FT BOX 84 = CREW CAB 4-DR W.B.1	EPO = 2.5L 4 Cyl. EHO = 3.9L 6 Cyl. EMO = 5.9L 8 Cyl. EVO = 4.7L Magnum EHC = 3.9L SMPI V6 EML = 5.9L V8 MPI Engine EPE = 2.5L POWER TECH I-4 Cyl. EVA = 4.7L V8 MPI	DDC = TRANSMISSION - 5-SPEED HD MANUAL DG4 = TRANSMISSION-MULTI-SPEED AUTO, 45RFE DGK = TRANSMISSION - 4-SPD. AUTOMATIC,42RE DGT = TRANSMISSION - 4-SPD. AUTOMATIC,46RE DGO = AUTO. TRANS.

AR = use ase required - = Non illustrrated part

Gear Train and Intermediate [42 RE] [DGK]
Figure 42RE-420

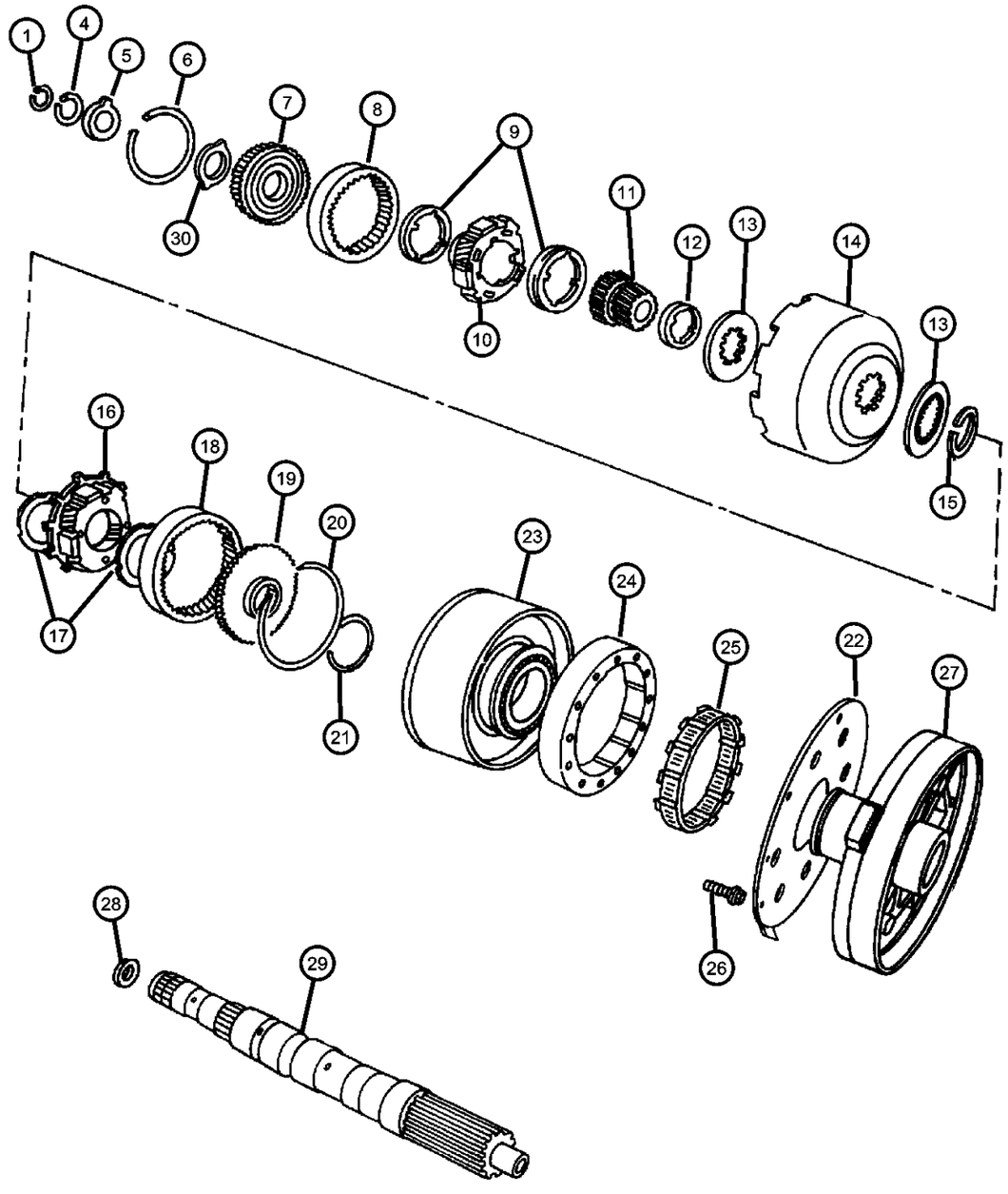

ITEM	PART NUMBER	QTY	LINE	SERIES	BODY	ENGINE	TRANS	TRIM	DESCRIPTION
		1	5				DGK		
11									GEAR, Sun
	04130685	1	1				DGK		
		1	5				DGK		
12									SPACER, Sun Gear
	04130736	1	1				DGK		
		1	5				DGK		
13									PLATE, Transmission Module
	04471566	2	1				DGK		
		2	5				DGK		
14									SHELL, Sun Gear
	04531288	1	1				DGK		
		1	5				DGK		
15									SNAP RING, Sun Gear Shell
	01942439	1	1				DGK		
		1	5				DGK		
16									CARRIER, Planetary Pinion
	04431438	1	1				DGK		
		1	5				DGK		
17									THRUST WASHER, Planetary Carrier
	03681935	1	1				DGK		
		1	5				DGK		
18									GEAR, Rear Annulus
	03743184	1	1				DGK		
		1	5				DGK		
19									SUPPORT, Annulus Gear
	03515501	AR							
		1	5				DGK		
20									SNAP RING
	01942444	1	1				DGK		
		1	5				DGK		

DAKOTA (AN)

SERIES	LINE	BODY	ENGINE	TRANSMISSION
L = Quad Cab L = Regular Cab L = Club Cab	1 = Dakota 2WD 5 = Dakota 4WD	31 = CLUB CAB 2-DR 6.5 FT BOX 61 = REG CAB 6.5 FT BOX 84 = CREW CAB 4-DR W.B.1	EPO = 2.5L 4 Cyl. EHO = 3.9L 6 Cyl. EMO = 5.9L 8 Cyl. EVO = 4.7L Magnum EHC = 3.9L SMPI V6 EML = 5.9L V8 MPI Engine EPE = 2.5L POWER TECH I-4 Cyl. EVA = 4.7L V8 MPI	DDC = TRANSMISSION - 5-SPEED HD MANUAL DG4 = TRANSMISSION-MULTI-SPEED AUTO, 45RFE DGK = TRANSMISSION - 4-SPD. AUTOMATIC,42RE DGT = TRANSMISSION - 4-SPD. AUTOMATIC,46RE DGO = AUTO. TRANS.

AR = use ase required - = Non illustrrated part

Gear Train and Intermediate [42 RE] [DGK]
Figure 42RE-420

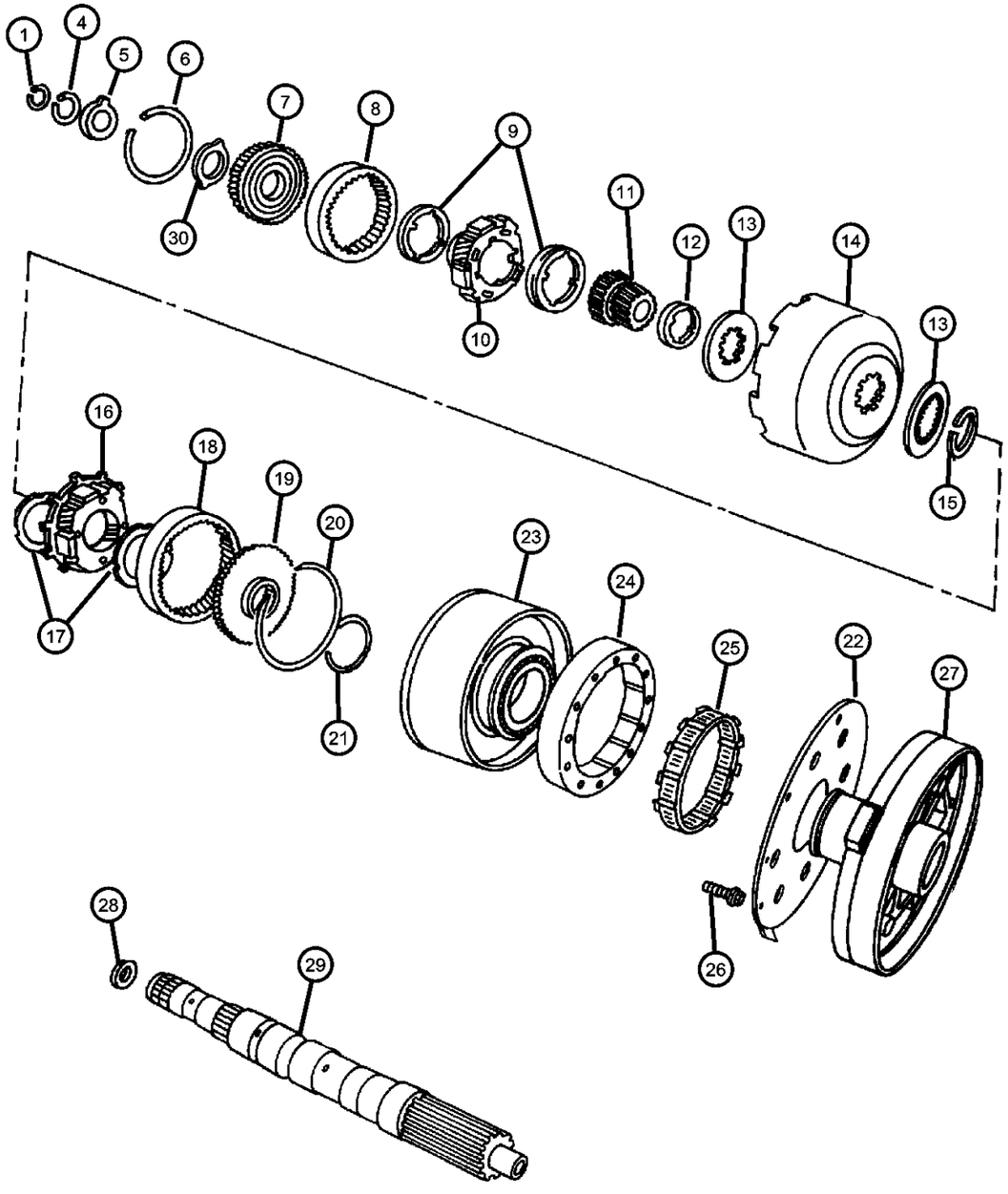

ITEM	PART NUMBER	QTY	LINE	SERIES	BODY	ENGINE	TRANS	TRIM	DESCRIPTION
21									SNAP RING, Reverse Drum
	06033480	1	1				DGK		
		1	5				DGK		
22									GASKET, Overdrive Piston Retainer
	04471564	1	1				DGK		
		1	5				DGK		
23									DRUM PACKAGE, Transmission
	04637956	1	1				DGK		
		1	5				DGK		
24									CAM, Overrunning Clutch
	04431690	1	1				DGK		
		1	5				DGK		
25									CLUTCH, Overrunning
	04431432	1	1				DGK		
		1	5				DGK		
26									SCREW, Hex Flange Head, .25-28x.875
	06033616	5	1				DGK		
		5	5				DGK		
27									RETAINER, Transmission Overdrive Clutch Piston
	04617246	1	1				DGK		
		1	5				DGK		
28									PLATE, Transmission Module
	04505188	1	1				DGK		
		1	5				DGK		
29									INTERMEDIATE SHAFT, Transmission
	04617604	1	1				DGK		
		1	5				DGK		
30									PLATE, Annulus Gear Thrust
	04617775	1	1				DGK		
		1	5				DGK		

DAKOTA (AN)

SERIES	LINE	BODY	ENGINE	TRANSMISSION
L = Quad Cab	1 = Dakota 2WD	31 = CLUB CAB 2-DR 6.5 FT BOX	EPO = 2.5L 4 Cyl.	DDC = TRANSMISSION - 5-SPEED HD MANUAL
L = Regular Cab	5 = Dakota 4WD	61 = REG CAB 6.5 FT BOX	EHO = 3.9L 6 Cyl.	DG4 = TRANSMISSION-MULTI-SPEED AUTO, 45RFE
L = Club Cab		84 = CREW CAB 4-DR W.B.1	EMO = 5.9L 8 Cyl.	DGK = TRANSMISSION - 4-SPD. AUTOMATIC,42RE
			EVO = 4.7L Magnum	DGT = TRANSMISSION - 4-SPD. AUTOMATIC,46RE
			EHC = 3.9L SMPI V6	DGO = AUTO. TRANS.
			EML = 5.9L V8 MPI Engine	
			EPE = 2.5L POWER TECH I-4 Cyl.	
			EVA = 4.7L V8 MPI	

AR = use ase required - = Non illustrrated part

<< RETURN TO GROUP INDEX

Output Shaft [42 RE] [DGK]
Figure 42RE-430

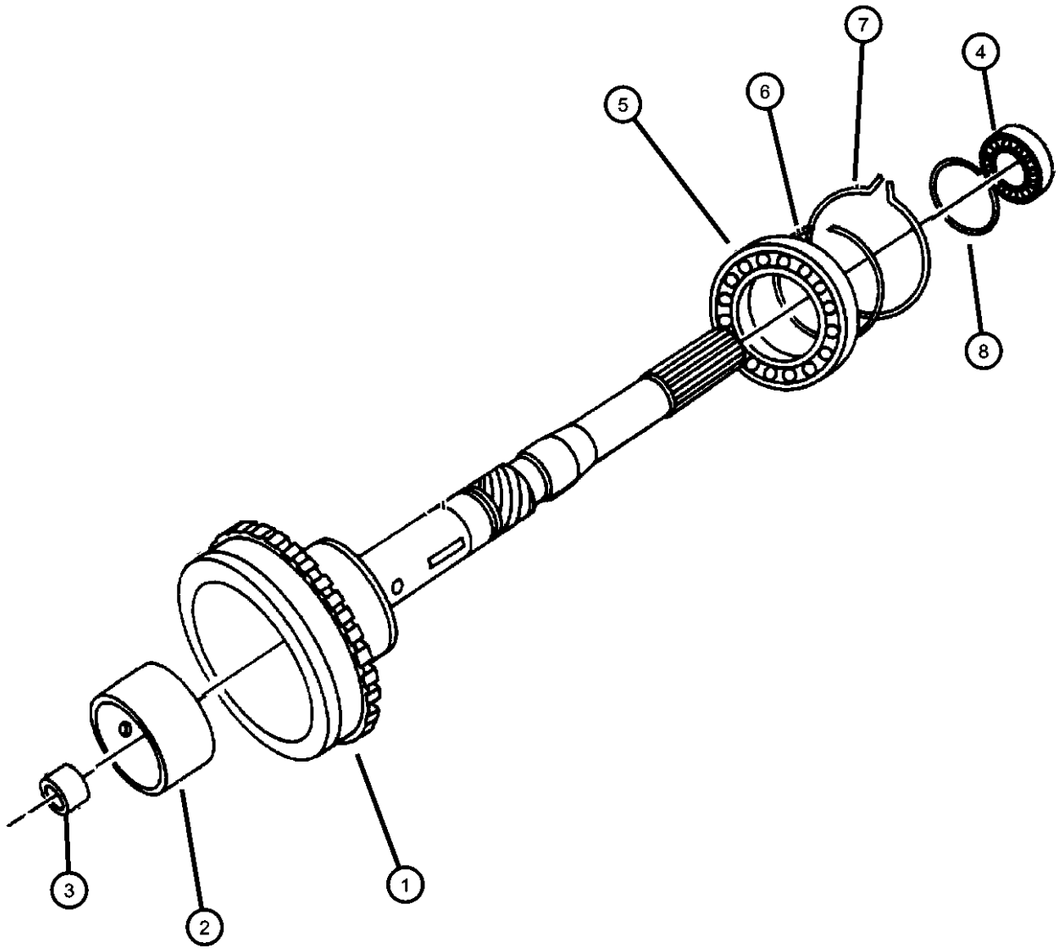

ITEM	PART NUMBER	QTY	LINE	SERIES	BODY	ENGINE	TRANS	TRIM	DESCRIPTION
NOTES:									
DGK= 42RE Automatic Transmission									
1									SHAFT, Output
	04798536	1	5				DGK		
	05003232AA	1	1				DGK		
2	05003232AA	1							BUSHING, (NOT SERVICED)
3	05003232AA	1							BUSHING, (NOT SERVICED)
4	02466224	1	1				DGK		BEARING, Output Shaft
5	04461008	1	1				DGK		BEARING, Output Shaft
6									SNAP RING
	04461068	1	1				DGK		
		1	5				DGK		
7									SNAP RING
	04461057	1	1				DGK		
		1	5				DGK		
8	04461069	1	1				DGK		SNAP RING

DAKOTA (AN)

SERIES	LINE	BODY	ENGINE	TRANSMISSION
L = Quad Cab	1 = Dakota 2WD	31 = CLUB CAB 2-DR 6.5 FT BOX	EPO = 2.5L 4 Cyl.	DDC = TRANSMISSION - 5-SPEED HD MANUAL
L = Regular Cab	5 = Dakota 4WD	61 = REG CAB 6.5 FT BOX	EHO = 3.9L 6 Cyl.	DG4 = TRANSMISSION-MULTI-SPEED AUTO, 45RFE
L = Club Cab		84 = CREW CAB 4-DR W.B.1	EMO = 5.9L 8 Cyl.	DGK = TRANSMISSION - 4-SPD. AUTOMATIC,42RE
			EVO = 4.7L Magnum	DGT = TRANSMISSION - 4-SPD. AUTOMATIC,46RE
			EHC = 3.9L SMPI V6	DGO = AUTO. TRANS.
			EML = 5.9L V8 MPI Engine	
			EPE = 2.5L POWER TECH I-4 Cyl.	
			EVA = 4.7L V8 MPI	

Bands [42 RE] [DGK]
Figure 42RE-510

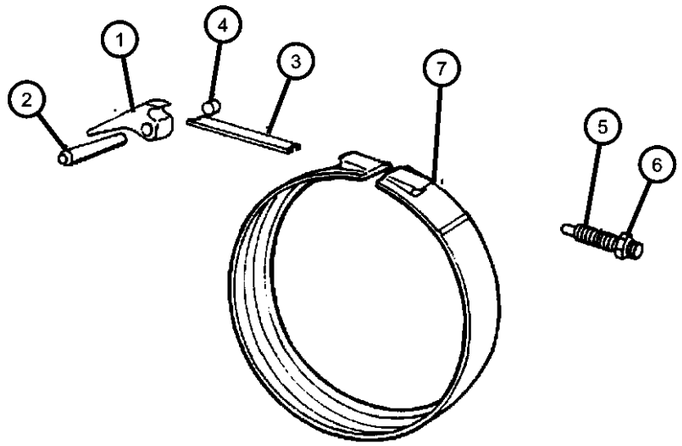

KICKDOWN BAND

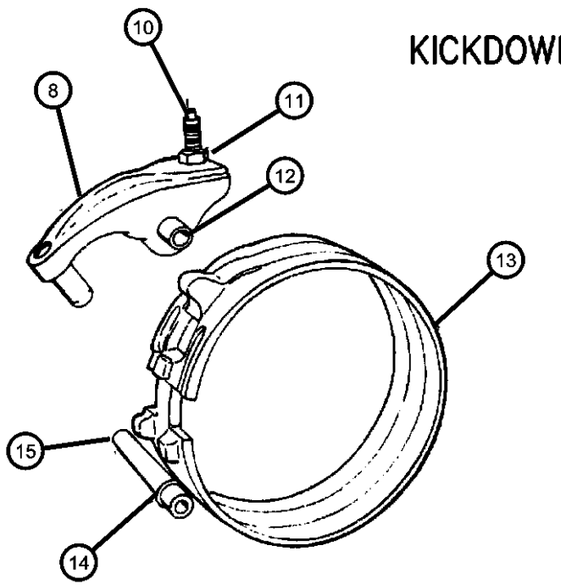

DOUBLE WRAP REVERSE BAND

ITEM	PART NUMBER	QTY	LINE	SERIES	BODY	ENGINE	TRANS	TRIM	DESCRIPTION
NOTES:									
DGK= 42RE Automatic Transmission									
1									LEVER, Kickdown
	52118264	1	1				DGK		
		1	5				DGK		
2									SHAFT, Band Lever
	04531181	1	1				DGK		
		1	5				DGK		
3									STRUT, Kickdown Band
	03515084	1	1				DGK		
		1	5				DGK		
4		1							PLUG, (NOT SERVICED)
5									SCREW
	06036141AA	1	1				DGK		
		1	5				DGK		
6									NUT, Hex Jam, .50-20
	00124934	1	1				DGK		
		1	5				DGK		
7									BAND, Kickdown
	04617849	1	1				DGK		
		1	5				DGK		
8									LEVER, Reverse Band
	04202764AB	1	1				DGK		
		1	5				DGK		
-9									LEVER, Reverse Band
	04202764AB	1	1				DGK		
		1	5				DGK		
10									SCREW, Trans Reverse Band Adjusting, .375-24-1.88
	02538472	1	1				DGK		
		1	5				DGK		
11									NUT, Hex Jam, .50-20
	00124934	1	1				DGK		

DAKOTA (AN)

SERIES	LINE	BODY	ENGINE	TRANSMISSION
L = Quad Cab L = Regular Cab L = Club Cab	1 = Dakota 2WD 5 = Dakota 4WD	31 = CLUB CAB 2-DR 6.5 FT BOX 61 = REG CAB 6.5 FT BOX 84 = CREW CAB 4-DR W.B.1	EPO = 2.5L 4 Cyl. EHO = 3.9L 6 Cyl. EMO = 5.9L 8 Cyl. EVO = 4.7L Magnum EHC = 3.9L SMPI V6 EML = 5.9L V8 MPI Engine EPE = 2.5L POWER TECH I-4 Cyl. EVA = 4.7L V8 MPI	DDC = TRANSMISSION - 5-SPEED HD MANUAL DG4 = TRANSMISSION-MULTI-SPEED AUTO, 45RFE DGK = TRANSMISSION - 4-SPD. AUTOMATIC,42RE DGT = TRANSMISSION - 4-SPD. AUTOMATIC,46RE DGO = AUTO. TRANS.

Bands [42 RE] [DGK]
Figure 42RE-510

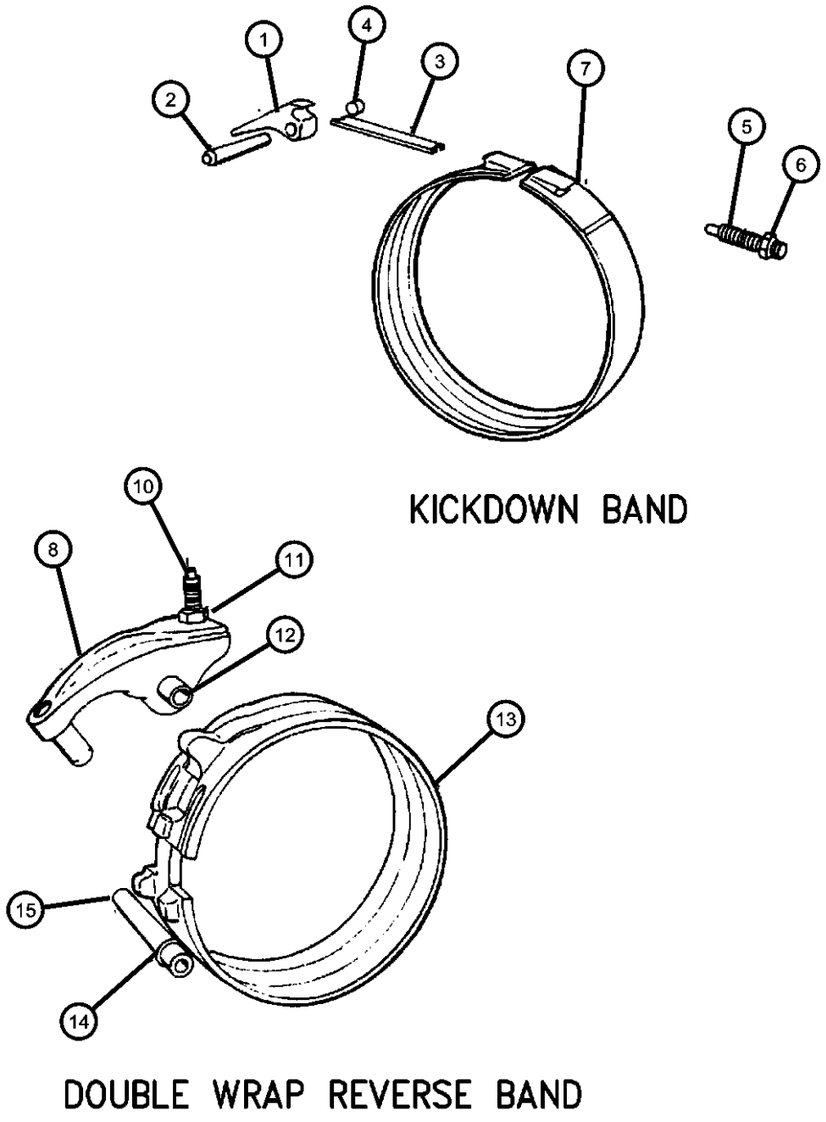

ITEM	PART NUMBER	QTY	LINE	SERIES	BODY	ENGINE	TRANS	TRIM	DESCRIPTION
		1	5				DGK		
12									SHAFT, Reverse Band
	03410102	1	1				DGK		
		1	5				DGK		
13									BAND, Reverse
	04431406	1	1				DGK		
		1	5				DGK		
14									O RING
	01556385	1	1				DGK		
		1	5				DGK		
15									SHAFT, Reverse Band
	03410102	1	1				DGK		
		1	5				DGK		

DAKOTA (AN)

SERIES	LINE	BODY	ENGINE	TRANSMISSION
L = Quad Cab L = Regular Cab L = Club Cab	1 = Dakota 2WD 5 = Dakota 4WD	31 = CLUB CAB 2-DR 6.5 FT BOX 61 = REG CAB 6.5 FT BOX 84 = CREW CAB 4-DR W.B.1	EPO = 2.5L 4 Cyl. EHO = 3.9L 6 Cyl. EMO = 5.9L 8 Cyl. EVO = 4.7L Magnum EHC = 3.9L SMPI V6 EML = 5.9L V8 MPI Engine EPE = 2.5L POWER TECH I-4 Cyl. EVA = 4.7L V8 MPI	DDC = TRANSMISSION - 5-SPEED HD MANUAL DG4 = TRANSMISSION-MULTI-SPEED AUTO, 45RFE DGK = TRANSMISSION - 4-SPD. AUTOMATIC,42RE DGT = TRANSMISSION - 4-SPD. AUTOMATIC,46RE DGO = AUTO. TRANS.

Valve Body [42 RE] [DGK]
Figure 42RE-710

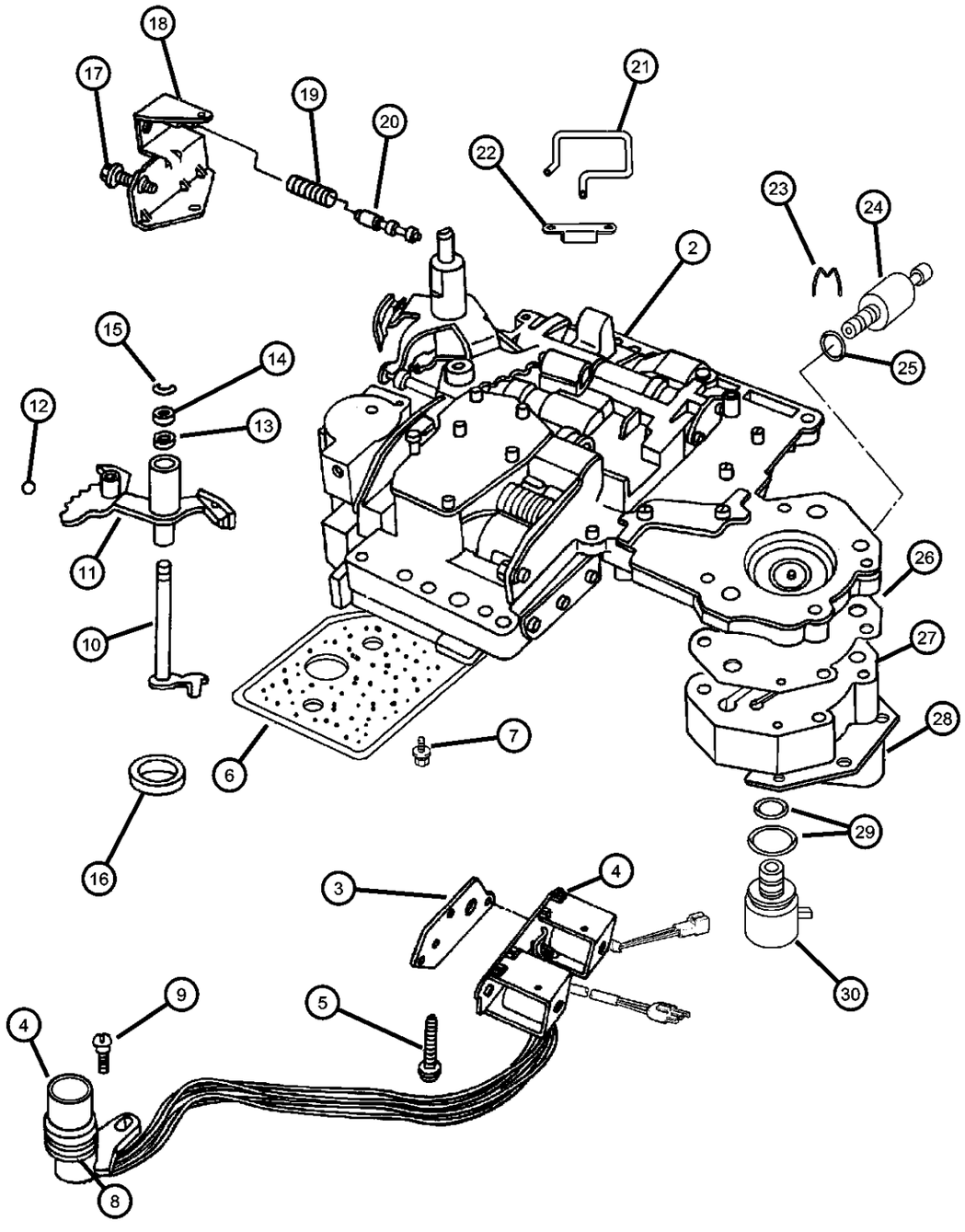

ITEM	PART NUMBER	QTY	LINE	SERIES	BODY	ENGINE	TRANS	TRIM	DESCRIPTION
NOTES:									
Sales Codes:									
EHC = 3.9L MAGNUM V6 Engine									
-1									SEAL AND GASKET PACKAGE, Valve Body and Servo
	04863933AB	1	1				DGK		
		1	5				DGK		
2									BODY, Transfer Plate
	52119633AB	1	1				DGK		
		1	5				DGK		
3									GASKET, Transmission Solenoid
	04617216	1	1				DGK		
		1	5				DGK		
4									SOLENOID, Transmission Overdrive
	52118500AB	1	1				DGK		
		1	5				DGK		
5									BOLT, Valve Body, .25-20x1.75
	00181071	3	1				DGK		
		3	5				DGK		
6									FILTER, Valve Body
	52118789	1	1				DGK		
		1	5				DGK		
7									SCREW AND WASHER, Oil Filter Mounting, Fillester Head .190-24x2.500
	06033826	3	1				DGK		
		3	5				DGK		
8									O RING, Solenoid Wiring, Transmission
	06034748	2	1				DGK		
		2	5				DGK		
9									SCREW, Tapping, .19-24x.75
	06033985	1	1				DGK		
		1	5				DGK		

DAKOTA (AN)

SERIES	LINE	BODY	ENGINE	TRANSMISSION
L = Quad Cab	1 = Dakota 2WD	31 = CLUB CAB 2-DR 6.5 FT BOX	EPO = 2.5L 4 Cyl.	DDC = TRANSMISSION - 5-SPEED HD MANUAL
L = Regular Cab	5 = Dakota 4WD	61 = REG CAB 6.5 FT BOX	EHO = 3.9L 6 Cyl.	DG4 = TRANSMISSION-MULTI-SPEED AUTO, 45RFE
L = Club Cab		84 = CREW CAB 4-DR W.B.1	EMO = 5.9L 8 Cyl.	DGK = TRANSMISSION - 4-SPD. AUTOMATIC,42RE
			EVO = 4.7L Magnum	DGT = TRANSMISSION - 4-SPD. AUTOMATIC,46RE
			EHC = 3.9L SMPI V6	DGO = AUTO. TRANS.
			EML = 5.9L V8 MPI Engine	
			EPE = 2.5L POWER TECH I-4 Cyl.	
			EVA = 4.7L V8 MPI	

Valve Body [42 RE] [DGK]
Figure 42RE-710

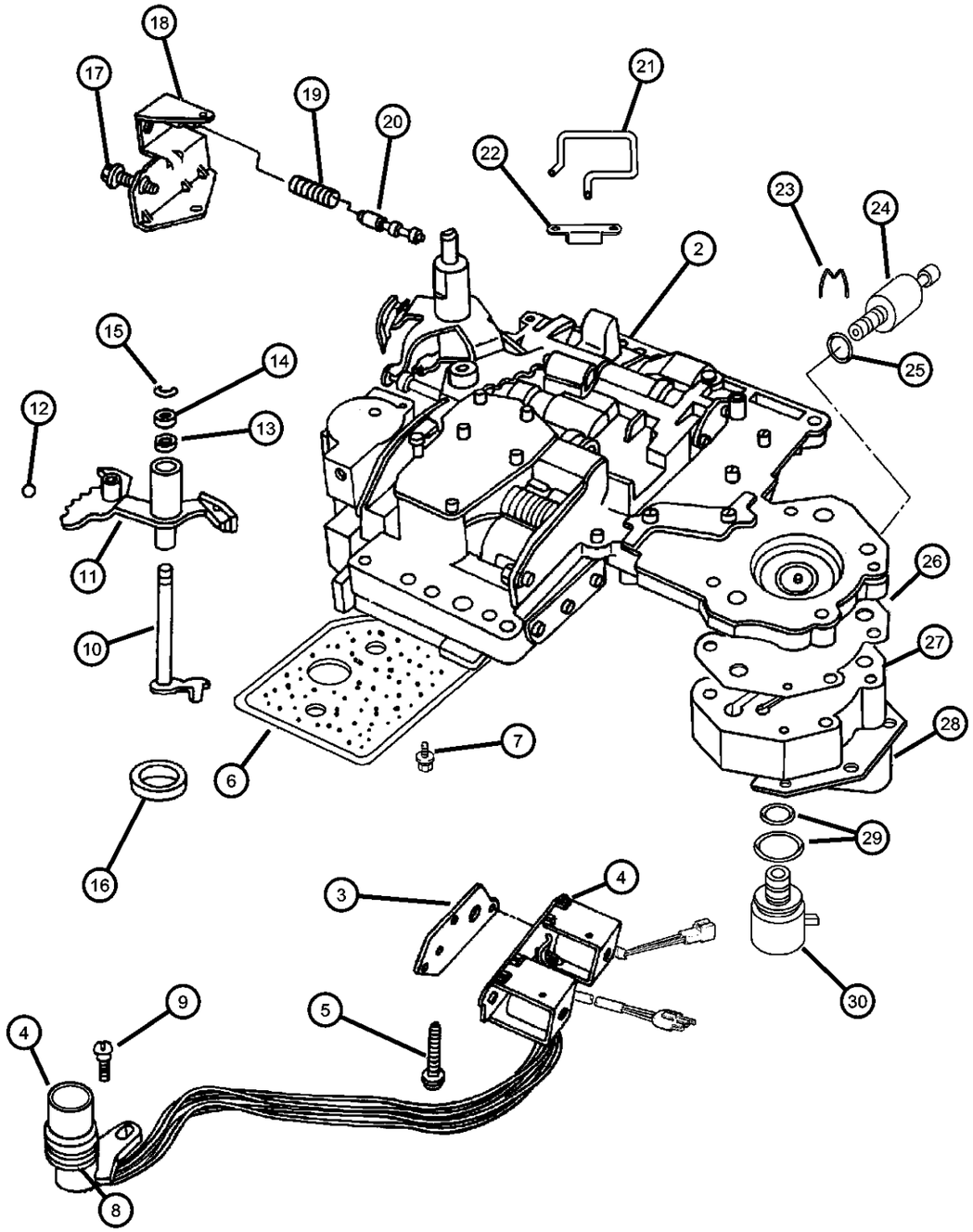

ITEM	PART NUMBER	QTY	LINE	SERIES	BODY	ENGINE	TRANS	TRIM	DESCRIPTION
10									LEVER, Throttle Valve
	03681227	1	1				DGK		
		1	5				DGK		
11									LEVER, Manual Valve
	04617439	1	1				DGK		
		1	5				DGK		
12									BALL, Manual Lever Detent, .343 Diameter
	00147488	1	1				DGK		
		1	5				DGK		
13									SEAL, Valve Lever Shift
	02466548	1	1				DGK		
		1	5				DGK		
14									WASHER, Manual Valve Lever
	02538062	1	1				DGK		
		1	5				DGK		
15									SNAP RING
	06035208	2	1				DGK		
		2	5				DGK		
16									SEAL, Manual Shift Valve, 1.25 OD
	04505098	1	1				DGK		
		1	5				DGK		
17									SCREW, Cap Head Lock, .312-24x1.25
	06030609	1	1				DGK		
		1	5				DGK		
18									BRACKET, Valve Body Switch
	04617010	1	1				DGK		
		1	5				DGK		
19									SPRING, Switch Valve
	04130492	1	1				DGK		
		1	5				DGK		
20									VALVE, Trans Lockup Switch

DAKOTA (AN)

SERIES	LINE	BODY	ENGINE	TRANSMISSION
L = Quad Cab L = Regular Cab L = Club Cab	1 = Dakota 2WD 5 = Dakota 4WD	31 = CLUB CAB 2-DR 6.5 FT BOX 61 = REG CAB 6.5 FT BOX 84 = CREW CAB 4-DR W.B.1	EPO = 2.5L 4 Cyl. EHO = 3.9L 6 Cyl. EMO = 5.9L 8 Cyl. EVO = 4.7L Magnum EHC = 3.9L SMPI V6 EML = 5.9L V8 MPI Engine EPE = 2.5L POWER TECH I-4 Cyl. EVA = 4.7L V8 MPI	DDC = TRANSMISSION - 5-SPEED HD MANUAL DG4 = TRANSMISSION-MULTI-SPEED AUTO, 45RFE DGK = TRANSMISSION - 4-SPD. AUTOMATIC,42RE DGT = TRANSMISSION - 4-SPD. AUTOMATIC,46RE DGO = AUTO. TRANS.

AR = use ase required - = Non illustrrated part

Valve Body [42 RE] [DGK]
Figure 42RE-710

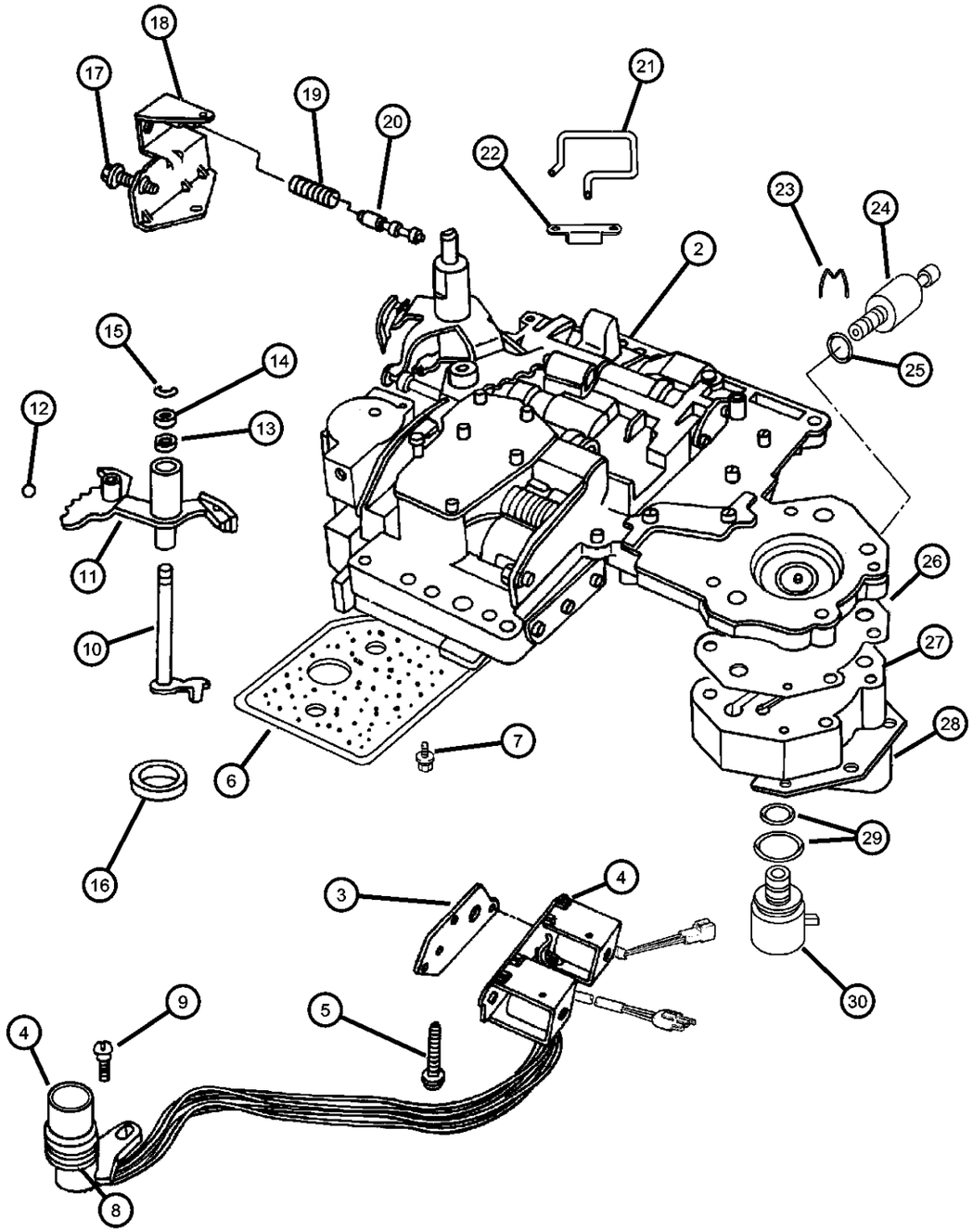

ITEM	PART NUMBER	QTY	LINE	SERIES	BODY	ENGINE	TRANS	TRIM	DESCRIPTION
	04505036	1	1				DGK		
		1	5				DGK		
21									TUBE, Boost Valve
	04617008	1	1				DGK		
		1	5				DGK		
22									RETAINER, Boost Valve Oil Supply Tube
	52117958	1	1				DGK		
		1	5				DGK		
23									CLIP, Transmission Governor Transducer
	04617219	1	1				DGK		
		1	5				DGK		
24									TRANSDUCER, Pressure Sensor
	56028196AA	1	1				DGK		
		1	5				DGK		
25									O RING, Pressure Switch
	06034493	1	1				DGK		
		1	5				DGK		
26									GASKET, Transmission Solenoid
	04617216	1	1				DGK		
		1	5				DGK		
27		1							BODY, Governor, Serviced With Valve Body, (NOT SERVICED)
28									RETAINER, Transmission Governor Solenoid
	04617211AB	1	1				DGK		
		1	5				DGK		
29									O RING PACKAGE, Valve Body, Transmission
	04723549	1	1				DGK		
		1	5				DGK		
30									SOLENOID, Transmission Governor
	04617210	1	1				DGK		

DAKOTA (AN)

SERIES	LINE	BODY	ENGINE	TRANSMISSION
L = Quad Cab L = Regular Cab L = Club Cab	1 = Dakota 2WD 5 = Dakota 4WD	31 = CLUB CAB 2-DR 6.5 FT BOX 61 = REG CAB 6.5 FT BOX 84 = CREW CAB 4-DR W.B.1	EPO = 2.5L 4 Cyl. EHO = 3.9L 6 Cyl. EMO = 5.9L 8 Cyl. EVO = 4.7L Magnum EHC = 3.9L SMPI V6 EML = 5.9L V8 MPI Engine EPE = 2.5L POWER TECH I-4 Cyl. EVA = 4.7L V8 MPI	DDC = TRANSMISSION - 5-SPEED HD MANUAL DG4 = TRANSMISSION-MULTI-SPEED AUTO, 45RFE DGK = TRANSMISSION - 4-SPD. AUTOMATIC,42RE DGT = TRANSMISSION - 4-SPD. AUTOMATIC,46RE DGO = AUTO. TRANS.

Valve Body [42 RE] [DGK]
Figure 42RE-710

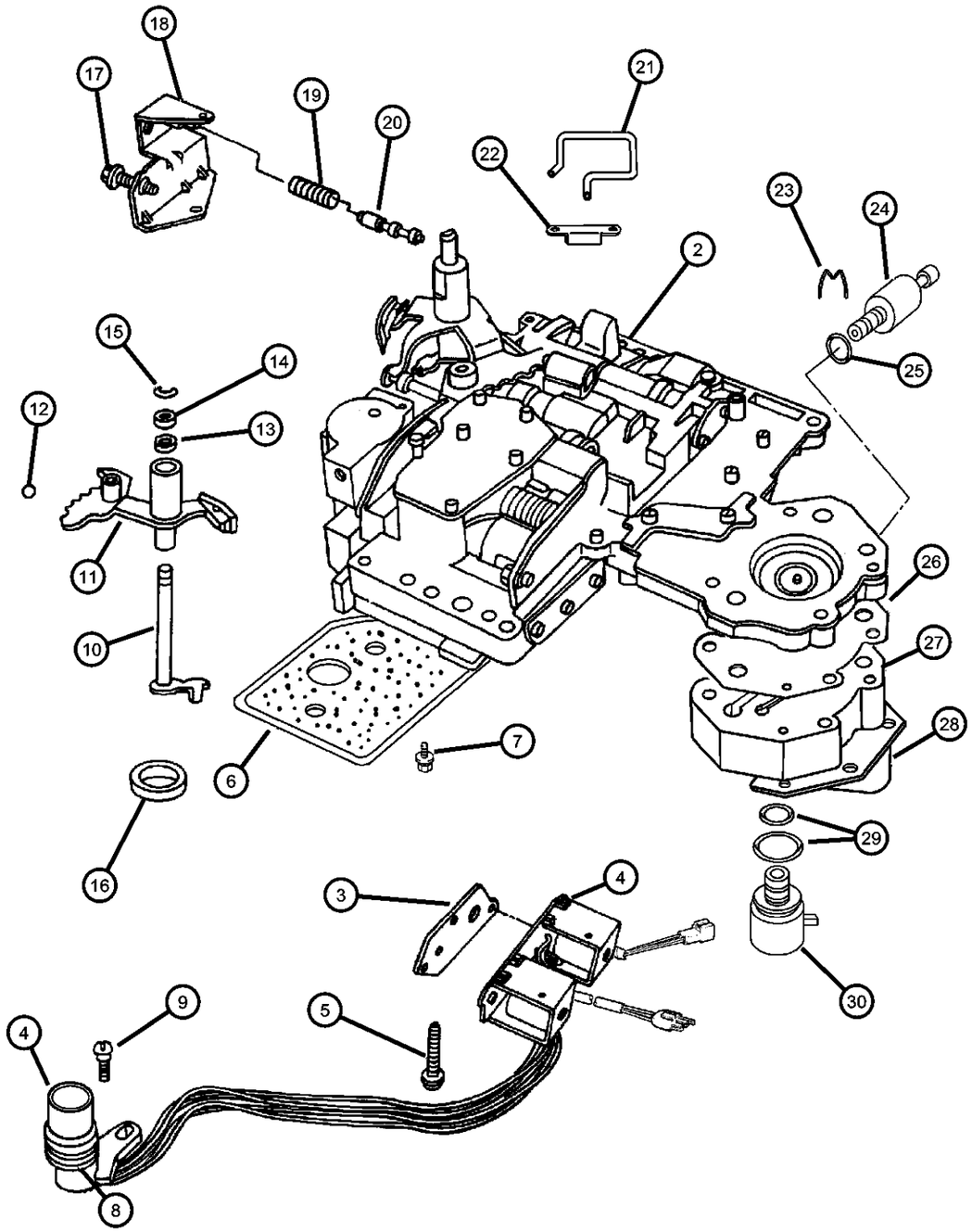

ITEM	PART NUMBER	QTY	LINE	SERIES	BODY	ENGINE	TRANS	TRIM	DESCRIPTION
		1	5				DGK		
-31									SCREEN, Transmission Regulator Valve
	03878313	1	1				DGK		
		1	5				DGK		
-32									SPRING, Limit Valve
	04348907	1	1				DGK		
		1	5				DGK		

DAKOTA (AN)

SERIES	LINE	BODY	ENGINE	TRANSMISSION
L = Quad Cab L = Regular Cab L = Club Cab	1 = Dakota 2WD 5 = Dakota 4WD	31 = CLUB CAB 2-DR 6.5 FT BOX 61 = REG CAB 6.5 FT BOX 84 = CREW CAB 4-DR W.B.1	EPO = 2.5L 4 Cyl. EHO = 3.9L 6 Cyl. EMO = 5.9L 8 Cyl. EVO = 4.7L Magnum EHC = 3.9L SMPI V6 EML = 5.9L V8 MPI Engine EPE = 2.5L POWER TECH I-4 Cyl. EVA = 4.7L V8 MPI	DDC = TRANSMISSION - 5-SPEED HD MANUAL DG4 = TRANSMISSION-MULTI-SPEED AUTO, 45RFE DGK = TRANSMISSION - 4-SPD. AUTOMATIC,42RE DGT = TRANSMISSION - 4-SPD. AUTOMATIC,46RE DGO = AUTO. TRANS.

AR = use ase required - = Non illustrrated part

<< RETURN TO GROUP INDEX

Servo [42 RE] [DGK]
Figure 42RE-720

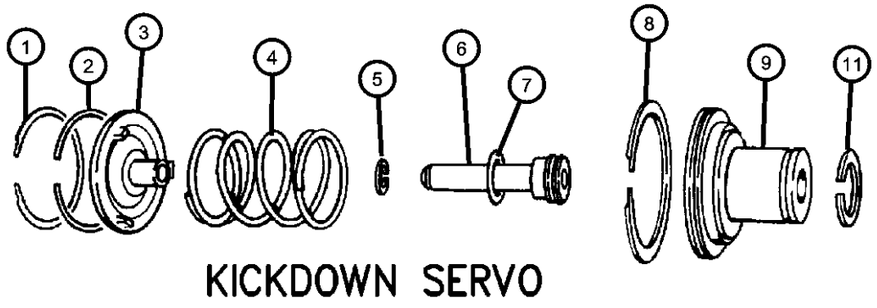

KICKDOWN SERVO

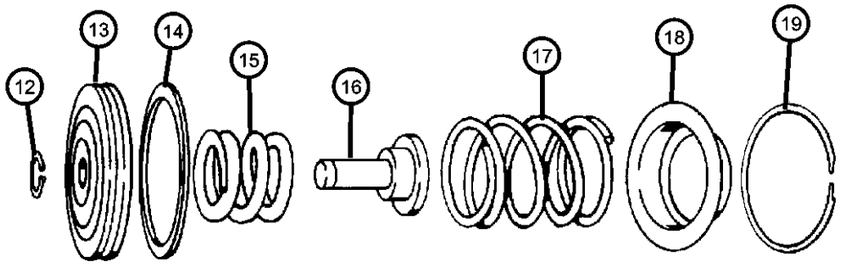

LOW AND REVERSE SERVO

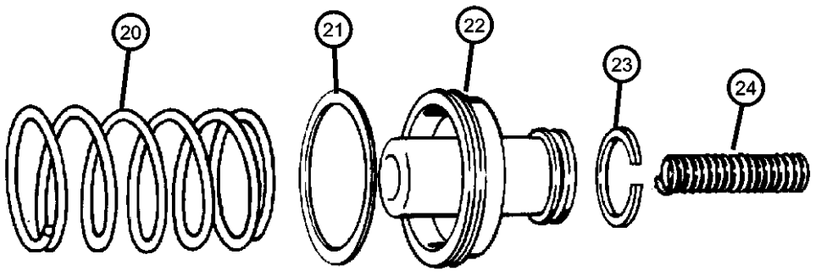

ACCUMULATOR PISTON AND SPRING

ITEM	PART NUMBER	QTY	LINE	SERIES	BODY	ENGINE	TRANS	TRIM	DESCRIPTION
NOTES:									
Sales Codes:									
EHC = 3.9L MAGNUM V6 Engine									
1									SNAP RING, Kickdown, 2.377
	06028863	1	1				DGK		
		1	5				DGK		
2									SEAL, Servo Guide
	04295966	1	1				DGK		
		1	5				DGK		
3									GUIDE, Kickdown Servo
	03410332	1	1				DGK		
		1	5				DGK		
4									SPRING, Kickdown Servo Piston
	04058885	1	1				DGK		
		1	5				DGK		
5									SNAP RING, Brake Master Cylinder
	06031392	1	1				DGK		
		1	5				DGK		
6									ROD, Kickdown Servo Piston
	04058780	1	1				DGK		
		1	5				DGK		
7									O RING, Kick Down Servo
	06028864	1	1				DGK		
		1	5				DGK		
8									SEAL, Servo Guide
	04295966	1	1				DGK		
		1	5				DGK		
9									PISTON, Kickdown Servo
	04058777	1	1				DGK		
		1	5				DGK		
-10									O RING, Kick Down Servo
	06028864	1	1				DGK		

DAKOTA (AN)

SERIES	LINE	BODY	ENGINE	TRANSMISSION
L = Quad Cab L = Regular Cab L = Club Cab	1 = Dakota 2WD 5 = Dakota 4WD	31 = CLUB CAB 2-DR 6.5 FT BOX 61 = REG CAB 6.5 FT BOX 84 = CREW CAB 4-DR W.B.1	EPO = 2.5L 4 Cyl. EHO = 3.9L 6 Cyl. EMO = 5.9L 8 Cyl. EVO = 4.7L Magnum EHC = 3.9L SMPI V6 EML = 5.9L V8 MPI Engine EPE = 2.5L POWER TECH I-4 Cyl. EVA = 4.7L V8 MPI	DDC = TRANSMISSION - 5-SPEED HD MANUAL DG4 = TRANSMISSION-MULTI-SPEED AUTO, 45RFE DGK = TRANSMISSION - 4-SPD. AUTOMATIC,42RE DGT = TRANSMISSION - 4-SPD. AUTOMATIC,46RE DGO = AUTO. TRANS.

Servo [42 RE] [DGK]
Figure 42RE-720

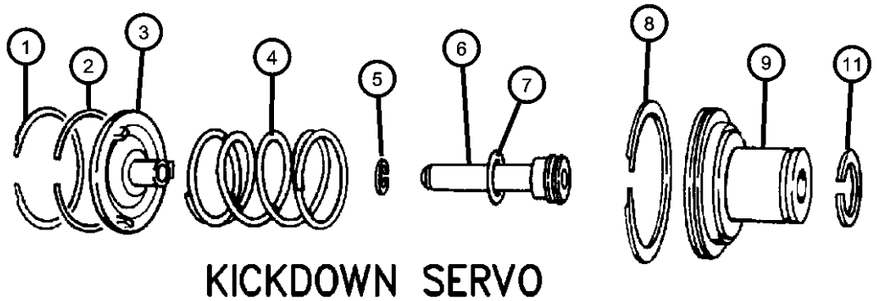

KICKDOWN SERVO

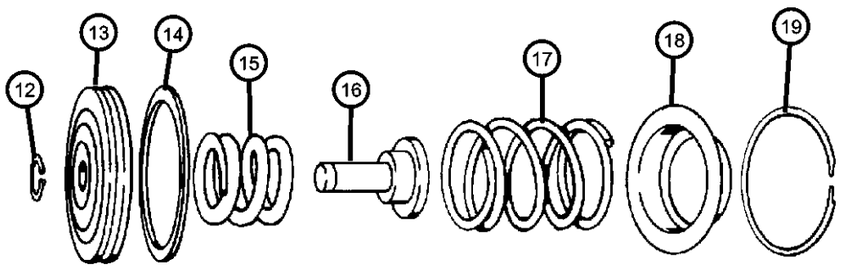

LOW AND REVERSE SERVO

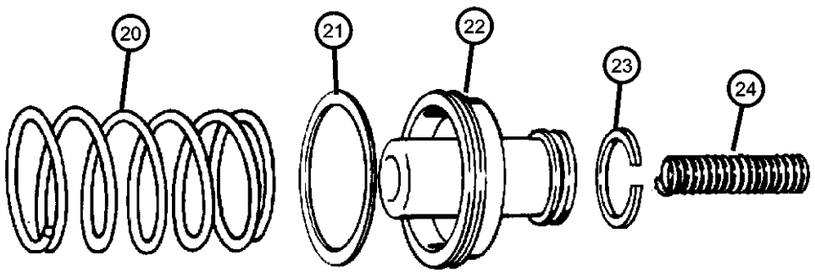

ACCUMULATOR PISTON AND SPRING

ITEM	PART NUMBER	QTY	LINE	SERIES	BODY	ENGINE	TRANS	TRIM	DESCRIPTION
		1	5				DGK		
11									SEAL, Kickdown Servo
	03743033	1	1				DGK		
		1	5				DGK		
12									SNAP RING, .435 ID
	06027153	1	1				DGK		
		1	5				DGK		
13									PISTON, Reverse Servo
	52118744	1	1				DGK		
		1	5				DGK		
14									SEAL, Reverse Servo Piston
	04202864	1	1				DGK		
		1	5				DGK		
15									SPRING, Reverse Servo Piston
	02801274	1	1				DGK		
		1	5				DGK		
16									PLUG, Reverse Servo Piston
	52118740AB	1	1				DGK		
		1	5				DGK		
17									SPRING, Reverse Servo Piston
	02801274	1	1				DGK		
		1	5				DGK		
18									RETAINER, Transmission Rear Clutch
	02464463	1	1				DGK		
		1	5				DGK		
19									SNAP RING
	02464464	1	1				DGK		
		1	5				DGK		
20									SPRING, Transmission Accumulator
	04531259	1	1				DGK		
		1	5				DGK		

DAKOTA (AN)

SERIES	LINE	BODY	ENGINE	TRANSMISSION
L = Quad Cab L = Regular Cab L = Club Cab	1 = Dakota 2WD 5 = Dakota 4WD	31 = CLUB CAB 2-DR 6.5 FT BOX 61 = REG CAB 6.5 FT BOX 84 = CREW CAB 4-DR W.B.1	EPO = 2.5L 4 Cyl. EHO = 3.9L 6 Cyl. EMO = 5.9L 8 Cyl. EVO = 4.7L Magnum EHC = 3.9L SMPI V6 EML = 5.9L V8 MPI Engine EPE = 2.5L POWER TECH I-4 Cyl. EVA = 4.7L V8 MPI	DDC = TRANSMISSION - 5-SPEED HD MANUAL DG4 = TRANSMISSION-MULTI-SPEED AUTO, 45RFE DGK = TRANSMISSION - 4-SPD. AUTOMATIC,42RE DGT = TRANSMISSION - 4-SPD. AUTOMATIC,46RE DGO = AUTO. TRANS.

Servo [42 RE] [DGK]
Figure 42RE-720

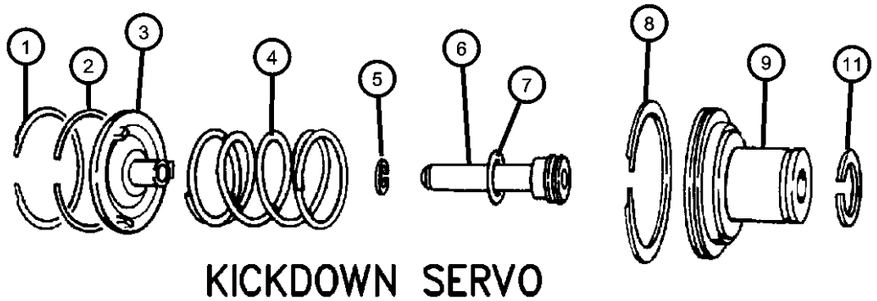

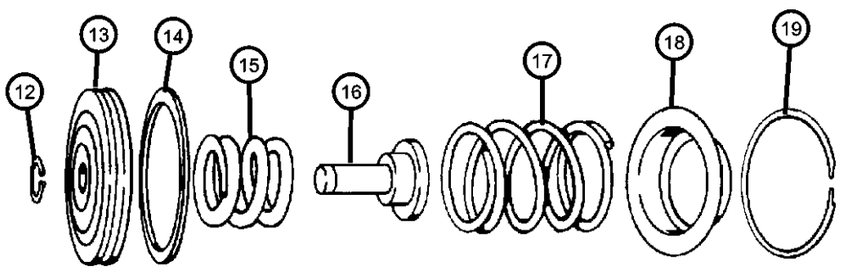

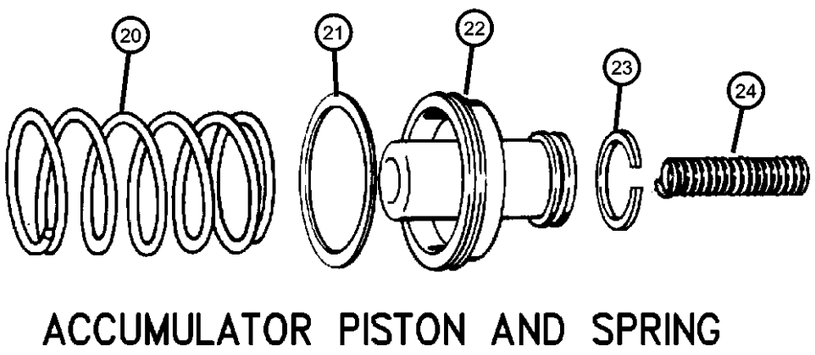

ITEM	PART NUMBER	QTY	LINE	SERIES	BODY	ENGINE	TRANS	TRIM	DESCRIPTION
21									SEAL, Piston Accumulator
	03743013	1	1				DGK		
		1	5				DGK		
22									PISTON, Accumulator
	03743650	1	1				DGK		
		1	5				DGK		
23									SEAL, Piston Accumulator
	03743010	1	1				DGK		
		1	5				DGK		
24									SPRING, Accumulator Piston
	04617529	1	1				DGK		
		1	5				DGK		

DAKOTA (AN)

SERIES	LINE	BODY	ENGINE	TRANSMISSION
L = Quad Cab	1 = Dakota 2WD	31 = CLUB CAB 2-DR 6.5 FT BOX	EPO = 2.5L 4 Cyl.	DDC = TRANSMISSION - 5-SPEED HD MANUAL
L = Regular Cab	5 = Dakota 4WD	61 = REG CAB 6.5 FT BOX	EHO = 3.9L 6 Cyl.	DG4 = TRANSMISSION-MULTI-SPEED AUTO, 45RFE
L = Club Cab		84 = CREW CAB 4-DR W.B.1	EMO = 5.9L 8 Cyl.	DGK = TRANSMISSION - 4-SPD. AUTOMATIC,42RE
			EVO = 4.7L Magnum	DGT = TRANSMISSION - 4-SPD. AUTOMATIC,46RE
			EHC = 3.9L SMPI V6	DGO = AUTO. TRANS.
			EML = 5.9L V8 MPI Engine	
			EPE = 2.5L POWER TECH I-4 Cyl.	
			EVA = 4.7L V8 MPI	

Parking Sprag [42 RE] [DGK]
Figure 42RE-730

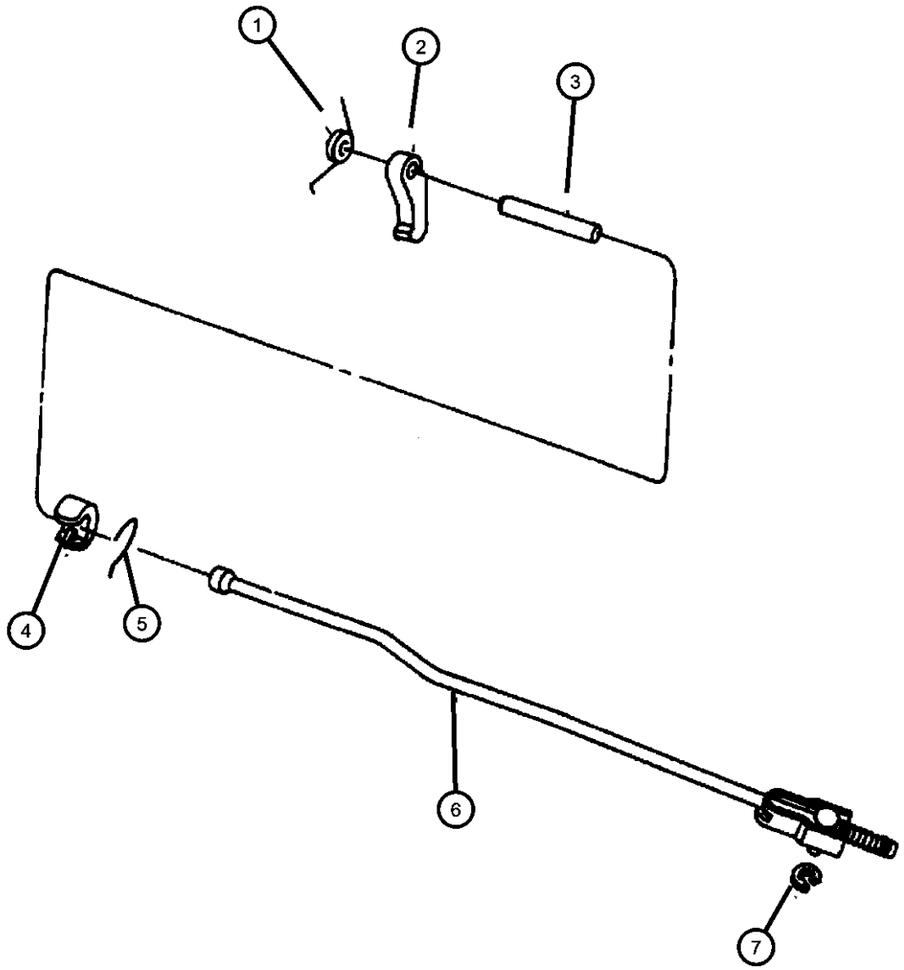

ITEM	PART NUMBER	QTY	LINE	SERIES	BODY	ENGINE	TRANS	TRIM	DESCRIPTION
NOTE:									
Sales Codes:									
EHC = 3.9L MAGNUM V6 Engine									
1									SPRING, Parking Sprag
	02466909	1	1				DGK		
		1	5				DGK		
2									SPRAG, Transmission Parking
	04471415	1	1				DGK		
		1	5				DGK		
3									SHAFT, Parking Sprag
	02466892	1	1				DGK		
		1	5				DGK		
4									PLUG, Parking Sprag
	02538042	1	1				DGK		
		1	5				DGK		
5									SNAP RING, Transmission
	02538034	1	1				DGK		
		1	5				DGK		
6									ROD, Parking Sprag
	04431748	1	1				DGK		
		1	5				DGK		
7									SNAP RING, Rod
	06035256	1	1				DGK		
		1	5				DGK		

DAKOTA (AN)

SERIES	LINE	BODY	ENGINE	TRANSMISSION
L = Quad Cab	1 = Dakota 2WD	31 = CLUB CAB 2-DR 6.5 FT BOX	EPO = 2.5L 4 Cyl.	DDC = TRANSMISSION - 5-SPEED HD MANUAL
L = Regular Cab	5 = Dakota 4WD	61 = REG CAB 6.5 FT BOX	EHO = 3.9L 6 Cyl.	DG4 = TRANSMISSION-MULTI-SPEED AUTO, 45RFE
L = Club Cab		84 = CREW CAB 4-DR W.B.1	EMO = 5.9L 8 Cyl.	DGK = TRANSMISSION - 4-SPD. AUTOMATIC,42RE
			EVO = 4.7L Magnum	DGT = TRANSMISSION - 4-SPD. AUTOMATIC,46RE
			EHC = 3.9L SMPI V6	DGO = AUTO. TRANS.
			EML = 5.9L V8 MPI Engine	
			EPE = 2.5L POWER TECH I-4 Cyl.	
			EVA = 4.7L V8 MPI	

AR = use ase required - = Non illustrrated part

Overdrive Clutch [42 RE] [DGK]
Figure 42RE-1010

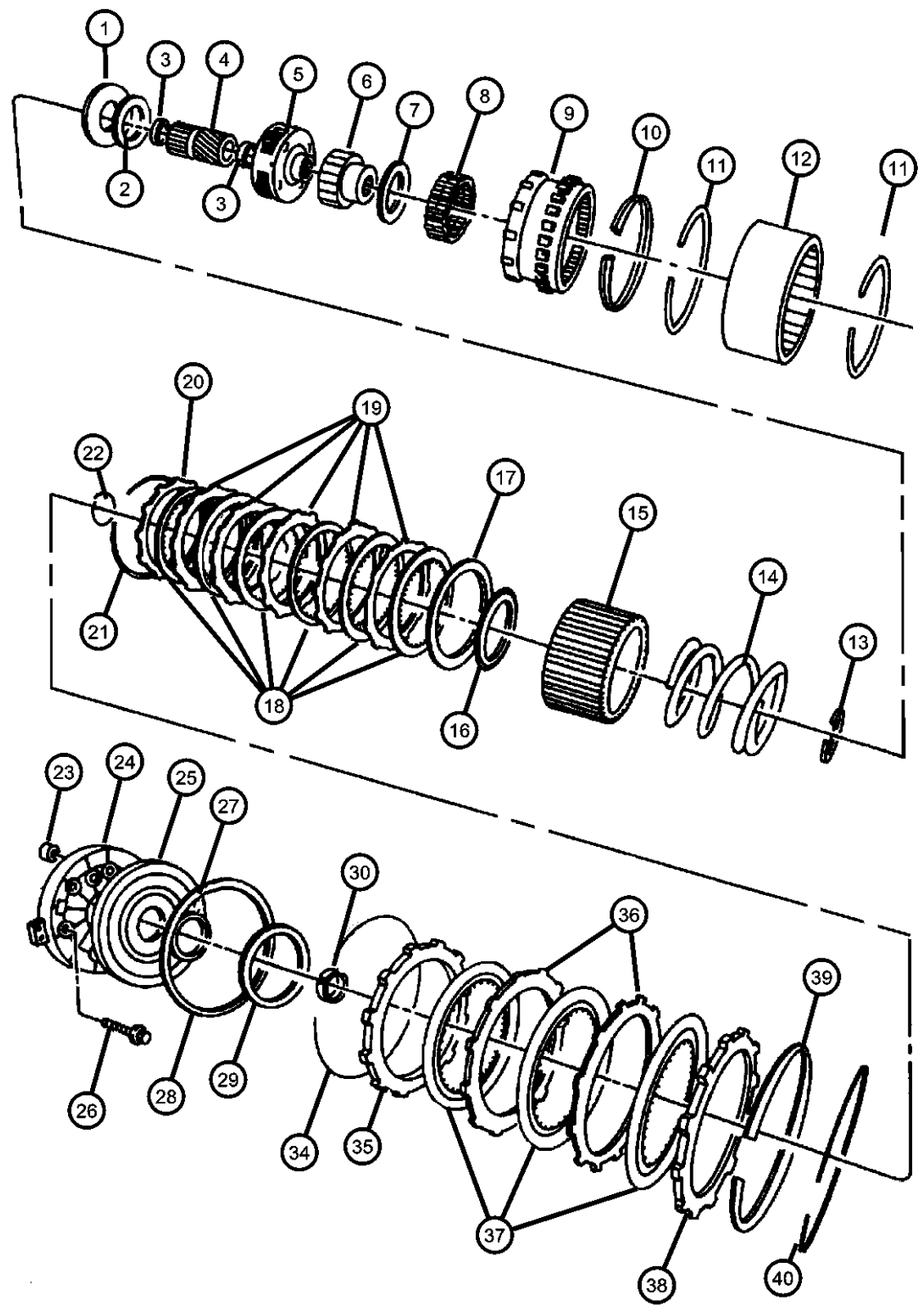

ITEM	PART NUMBER	QTY	LINE	SERIES	BODY	ENGINE	TRANS	TRIM	DESCRIPTION
NOTES:									
Sales Codes:									
EHC = 3.9L MAGNUM V6 Engine									
1									PLATE PACKAGE, Transmission Module
	04740774	1	1				DGK		
		1	5				DGK		
2		1							BEARING, (NOT SERVICED)
3		1							BUSHING, (NOT SERVICED)
4									GEAR, Overdrive Sun
	05015107AA	1	5				DGK		
		1	1				DGK		
5									CARRIER, O/Drive Planet Pinion
	04798520	1	1				DGK		
		1	5				DGK		
6									RACE, Overrunning Clutch
	04461124	1	1				DGK		
		1	5				DGK		
7									THRUST BEARING, Ovedrive Third Position
	04461014	1	1				DGK		
		1	5				DGK		
8									CLUTCH, Overdrive Overrunning
	04461015	1	1				DGK		
		1	5				DGK		
9									GEAR, Overdrive Annulus
	04761010	1	1				DGK		
		1	5				DGK		
10									SNAP RING, 5.25 OD
	04461059	1	1				DGK		
		1	5				DGK		
11									SNAP RING, 6.00 OD
	04461060	2	1				DGK		
		2	5				DGK		

DAKOTA (AN)

SERIES	LINE	BODY	ENGINE	TRANSMISSION
L = Quad Cab L = Regular Cab L = Club Cab	1 = Dakota 2WD 5 = Dakota 4WD	31 = CLUB CAB 2-DR 6.5 FT BOX 61 = REG CAB 6.5 FT BOX 84 = CREW CAB 4-DR W.B.1	EPO = 2.5L 4 Cyl. EHO = 3.9L 6 Cyl. EMO = 5.9L 8 Cyl. EVO = 4.7L Magnum EHC = 3.9L SMPI V6 EML = 5.9L V8 MPI Engine EPE = 2.5L POWER TECH I-4 Cyl. EVA = 4.7L V8 MPI	DDC = TRANSMISSION - 5-SPEED HD MANUAL DG4 = TRANSMISSION-MULTI-SPEED AUTO, 45RFE DGK = TRANSMISSION - 4-SPD. AUTOMATIC,42RE DGT = TRANSMISSION - 4-SPD. AUTOMATIC,46RE DGO = AUTO. TRANS.

Overdrive Clutch [42 RE] [DGK]
Figure 42RE-1010

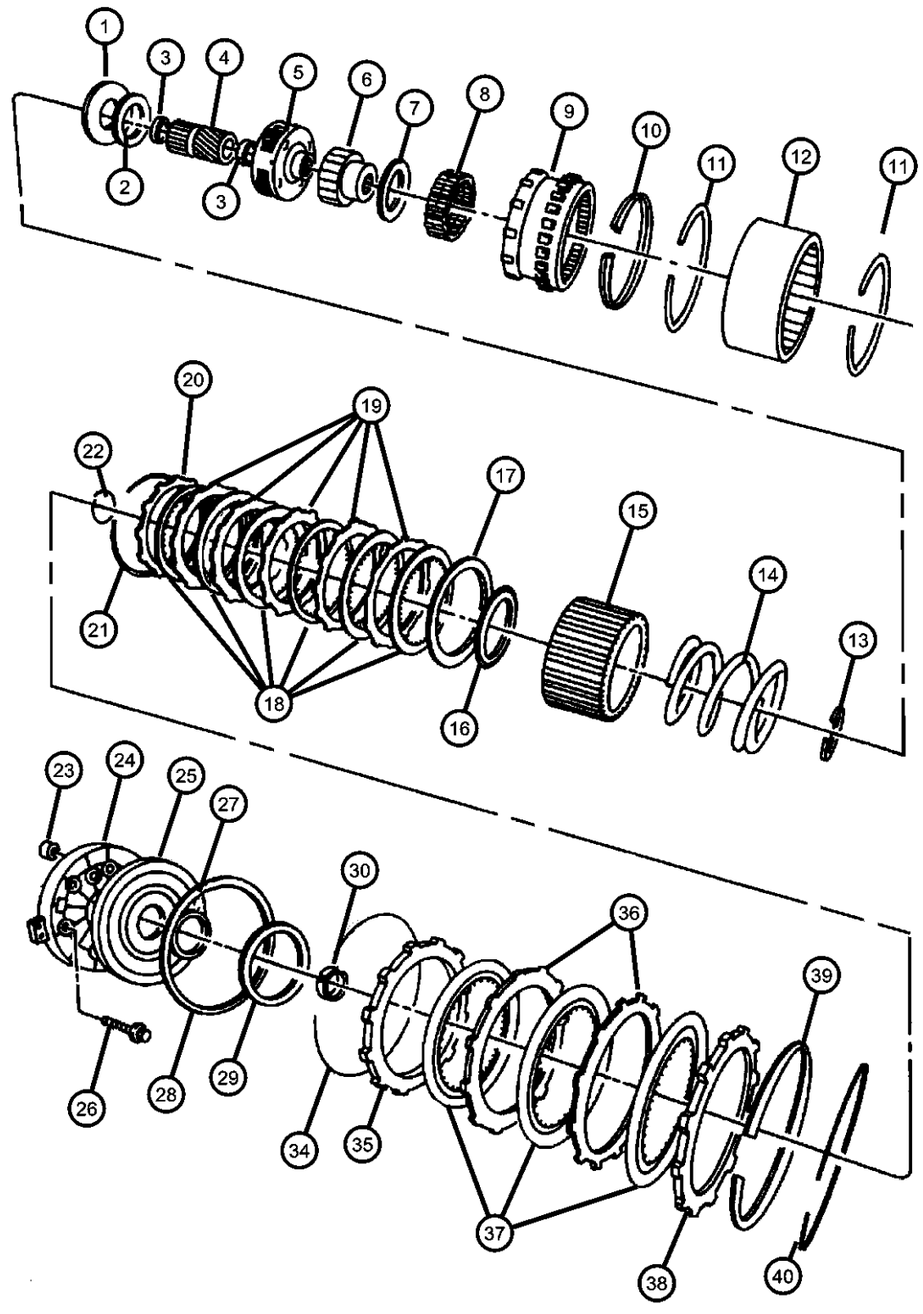

ITEM	PART NUMBER	QTY	LINE	SERIES	BODY	ENGINE	TRANS	TRIM	DESCRIPTION
12									DRUM, Automatic Transmission
	04461040	1	1				DGK		
		1	5				DGK		
13									SNAP RING, 2.1875 OD
	04461063	1	1				DGK		
		1	5				DGK		
14									SPRING, Direct Clutch
	04461027	1	1				DGK		
		1	5				DGK		
15									HUB, Direct Clutch
	04461072	1	5				DGK		
		1	1				DGK		
16									THRUST BEARING, Overdrive
	04446724	1	1				DGK		
		1	5				DGK		
17									PLATE, Transmission Clutch Reaction
	04461030	1	1				DGT		
		1	5				DGK		
18									DISC, Direct Clutch
	04461042	6	1				DGK		
		6	5				DGK		
19									PLATE, Transmission Clutch Reaction
	04461054	5	5				DGK		
		5	1				DGK		
20									PLATE, Transmission Clutch Reaction
	04461031	1	1				DGK		
		1	5				DGK		
21									SPRING, Direct Clutch
	04461032	1	1				DGK		
		1	5				DGK		

DAKOTA (AN)

SERIES	LINE	BODY	ENGINE	TRANSMISSION
L = Quad Cab L = Regular Cab L = Club Cab	1 = Dakota 2WD 5 = Dakota 4WD	31 = CLUB CAB 2-DR 6.5 FT BOX 61 = REG CAB 6.5 FT BOX 84 = CREW CAB 4-DR W.B.1	EPO = 2.5L 4 Cyl. EHO = 3.9L 6 Cyl. EMO = 5.9L 8 Cyl. EVO = 4.7L Magnum EHC = 3.9L SMPI V6 EML = 5.9L V8 MPI Engine EPE = 2.5L POWER TECH I-4 Cyl. EVA = 4.7L V8 MPI	DDC = TRANSMISSION - 5-SPEED HD MANUAL DG4 = TRANSMISSION-MULTI-SPEED AUTO, 45RFE DGK = TRANSMISSION - 4-SPD. AUTOMATIC,42RE DGT = TRANSMISSION - 4-SPD. AUTOMATIC,46RE DGO = AUTO. TRANS.

AR = use ase required - = Non illustrrated part

Overdrive Clutch [42 RE] [DGK]
Figure 42RE-1010

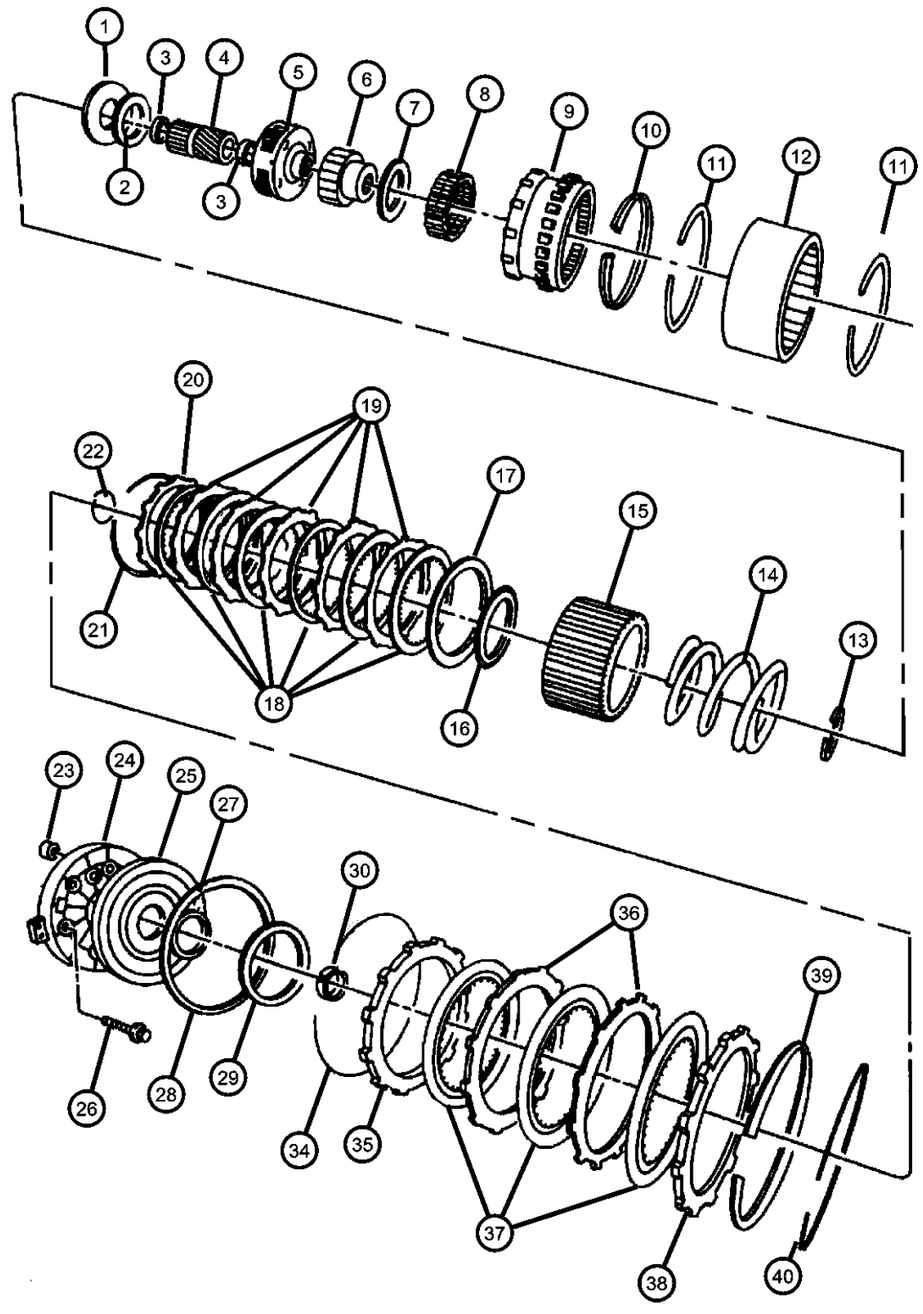

ITEM	PART NUMBER	QTY	LINE	SERIES	BODY	ENGINE	TRANS	TRIM	DESCRIPTION
22									SNAP RING, 1.875" OD
	04461064	1	1				DGK		
		1	5				DGK		
23									FILTER, Overdrive Clutch
	04412583	1	1				DGK		
		1	5				DGK		
24									RETAINER, Transmission Overdrive Clutch Piston
	04617246	1	1				DGK		
		1	5				DGK		
25									PISTON, Overdrive Clutch
	52118599	1	1				DGK		
		1	5				DGK		
26									BOLT, Hex Head, .25-28x1-5/8
	06033479	6	1				DGK		
		6	5				DGK		
27									SEAL, Overdrive Clutch Piston
	04431697	1	1				DGK		
		1	5				DGK		
28									SEAL, Overdrive Clutch Piston
	04431696	1	1				DGK		
		1	5				DGK		
29									PLATE, Transmission O/Drive Clutch
	04431585	1	1				DGK		(.123‘ - .125‘) Thick
		1	5				DGK		(.123‘ - .125‘) Thick
	04431586	1	1				DGK		(.153‘ - .155‘) Thick
		1	5				DGT		(.153‘ - .155‘) Thick
	04431587	1	1				DGK		(.183‘ - .185‘) Thick
		1	5				DGK		(.183‘ - .185‘) Thick
	04431588	1	1				DGK		(.213‘ - .215‘) Thick
		1	5				DGK		(.213‘ - .215‘) Thick
	04431590	1	1				DGK		(.243‘ - .245‘) Thick

DAKOTA (AN)

SERIES	LINE	BODY	ENGINE	TRANSMISSION
L = Quad Cab L = Regular Cab L = Club Cab	1 = Dakota 2WD 5 = Dakota 4WD	31 = CLUB CAB 2-DR 6.5 FT BOX 61 = REG CAB 6.5 FT BOX 84 = CREW CAB 4-DR W.B.1	EPO = 2.5L 4 Cyl. EHO = 3.9L 6 Cyl. EMO = 5.9L 8 Cyl. EVO = 4.7L Magnum EHC = 3.9L SMPI V6 EML = 5.9L V8 MPI Engine EPE = 2.5L POWER TECH I-4 Cyl. EVA = 4.7L V8 MPI	DDC = TRANSMISSION - 5-SPEED HD MANUAL DG4 = TRANSMISSION-MULTI-SPEED AUTO, 45RFE DGK = TRANSMISSION - 4-SPD. AUTOMATIC,42RE DGT = TRANSMISSION - 4-SPD. AUTOMATIC,46RE DGO = AUTO. TRANS.

AR = use ase required - = Non illustrrated part

<< RETURN TO GROUP INDEX

Overdrive Clutch [42 RE] [DGK]
Figure 42RE-1010

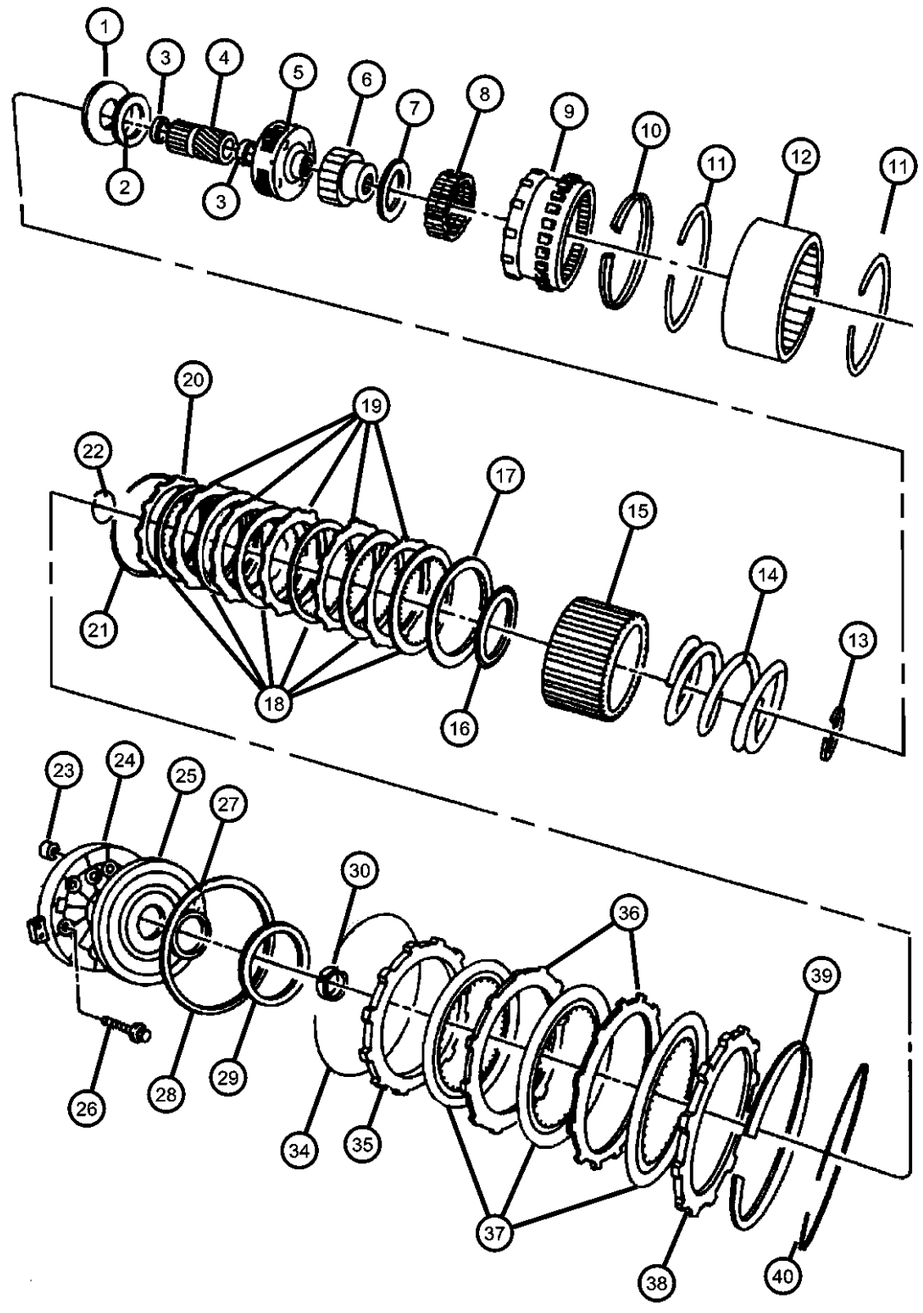

ITEM	PART NUMBER	QTY	LINE	SERIES	BODY	ENGINE	TRANS	TRIM	DESCRIPTION
		1	5				DGK		(.243‘ - .245‘) Thick
	04431731	1	1				DGK		(.138‘ - .140‘) Thick
		1	5				DGK		(.138‘ - .140‘) Thick
	04431732	1	1				DGK		(.168‘ - .170‘) Thick
		1	5				DGK		(.168‘ - .170‘) Thick
	04431733	1	1				DGK		(.198‘ - .200‘) Thick
		1	5				DGK		(.198‘ - .200‘) Thick
	04431734	1	1				DGK		(.228‘ - .230‘) Thick
		1	5				DGK		(.228‘ - .230‘) Thick
	04431735	1	1				DGK		(.108‘ - .110‘) Thick
		1	5				DGK		(.108‘ - .110‘) Thick
30									SPACER, Intermediate Shaft, 1.58mm
	04431916	1	1				DGK		
		1	5				DGK		
-31									SPACER, Intermediate Shaft, .175
	04431917	1	1				DGK		
		1	5				DGK		
-32									SPACER, Intermediate Shaft, .193
	04431918	1	1				DGK		
		1	5				DGK		
-33									SPACER, Intermediate Shaft, .211
	04431919	1	1				DGK		
		1	5				DGK		
34									SNAP RING, Overdrive Clutch
	04461082	1	1				DGK		
		1	5				DGK		
35									PLATE, Transmission Clutch Reaction
	04461048	1	1				DGK		
		1	5				DGK		
36									PLATE, Transmission Clutch Reaction

DAKOTA (AN)

SERIES	LINE	BODY	ENGINE	TRANSMISSION
L = Quad Cab L = Regular Cab L = Club Cab	1 = Dakota 2WD 5 = Dakota 4WD	31 = CLUB CAB 2-DR 6.5 FT BOX 61 = REG CAB 6.5 FT BOX 84 = CREW CAB 4-DR W.B.1	EPO = 2.5L 4 Cyl. EHO = 3.9L 6 Cyl. EMO = 5.9L 8 Cyl. EVO = 4.7L Magnum EHC = 3.9L SMPI V6 EML = 5.9L V8 MPI Engine EPE = 2.5L POWER TECH I-4 Cyl. EVA = 4.7L V8 MPI	DDC = TRANSMISSION - 5-SPEED HD MANUAL DG4 = TRANSMISSION-MULTI-SPEED AUTO, 45RFE DGK = TRANSMISSION - 4-SPD. AUTOMATIC,42RE DGT = TRANSMISSION - 4-SPD. AUTOMATIC,46RE DGO = AUTO. TRANS.

AR = use ase required - = Non illustrrated part

<< RETURN TO GROUP INDEX

Overdrive Clutch [42 RE] [DGK]
Figure 42RE-1010

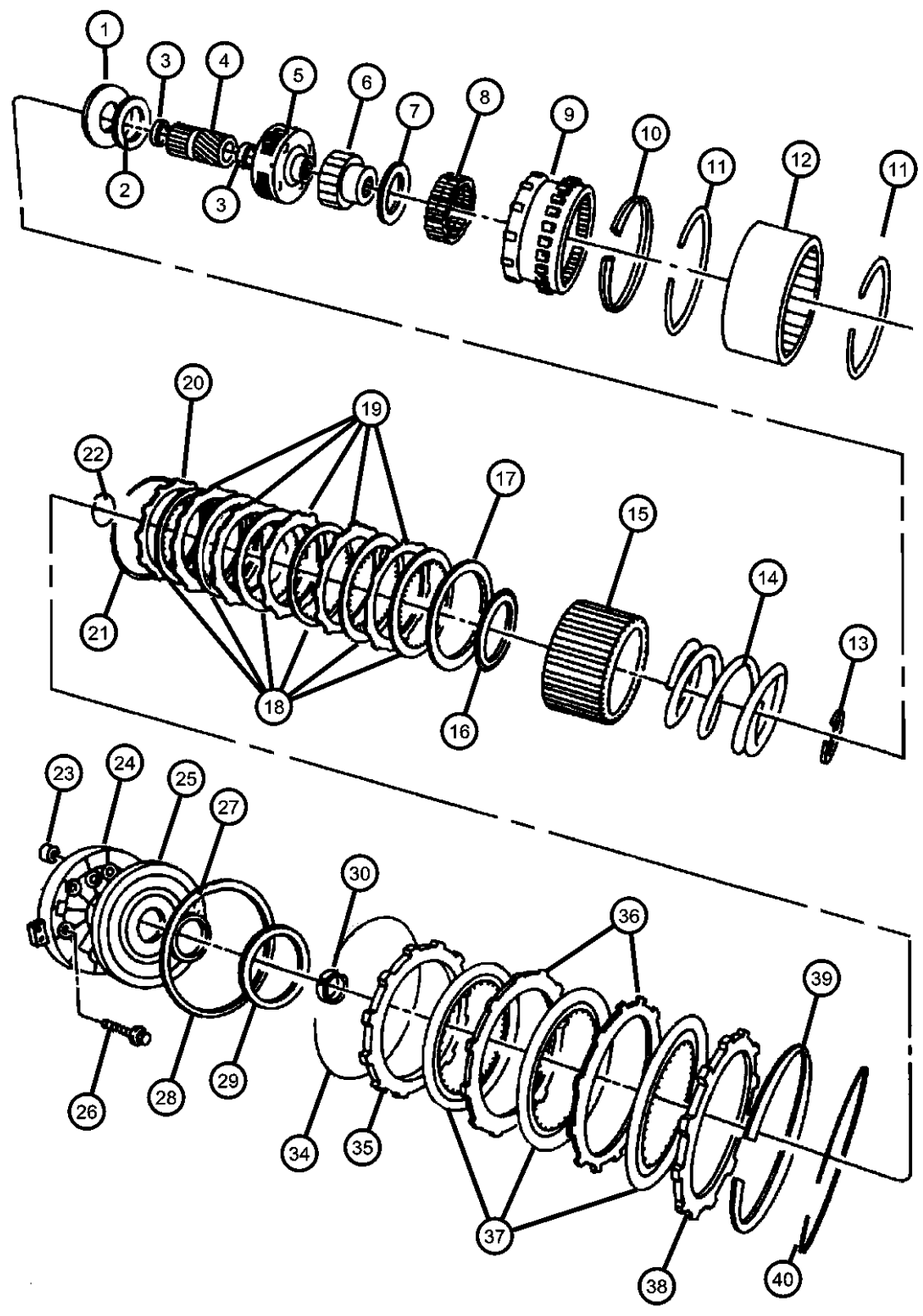

ITEM	PART NUMBER	QTY	LINE	SERIES	BODY	ENGINE	TRANS	TRIM	DESCRIPTION
	04461047	2	1				DGK		
		2	5				DGK		
37									DISC, Direct Clutch
	04461181	3	1				DGK		
		3	5				DGK		
38									PLATE, Transmission Clutch Reaction
	04461033	1	1				DGK		
		1	5				DGK		
39									SPRING, Overdrive Clutch
	04461066	1	1				DGK		
		1	5				DGK		
40									SNAP RING, 6.50 OD
	04461065	1	1				DGK		
		1	5				DGK		

DAKOTA (AN)

SERIES	LINE	BODY	ENGINE	TRANSMISSION
L = Quad Cab	1 = Dakota 2WD	31 = CLUB CAB 2-DR 6.5 FT BOX	EPO = 2.5L 4 Cyl.	DDC = TRANSMISSION - 5-SPEED HD MANUAL
L = Regular Cab	5 = Dakota 4WD	61 = REG CAB 6.5 FT BOX	EHO = 3.9L 6 Cyl.	DG4 = TRANSMISSION-MULTI-SPEED AUTO, 45RFE
L = Club Cab		84 = CREW CAB 4-DR W.B.1	EMO = 5.9L 8 Cyl.	DGK = TRANSMISSION - 4-SPD. AUTOMATIC,42RE
			EVO = 4.7L Magnum	DGT = TRANSMISSION - 4-SPD. AUTOMATIC,46RE
			EHC = 3.9L SMPI V6	DGO = AUTO. TRANS.
			EML = 5.9L V8 MPI Engine	
			EPE = 2.5L POWER TECH I-4 Cyl.	
			EVA = 4.7L V8 MPI	

AR = use ase required - = Non illustrrated part

<< RETURN TO GROUP INDEX

Gearshift Controls [42 RE] [DGK]
Figure 42RE-1230

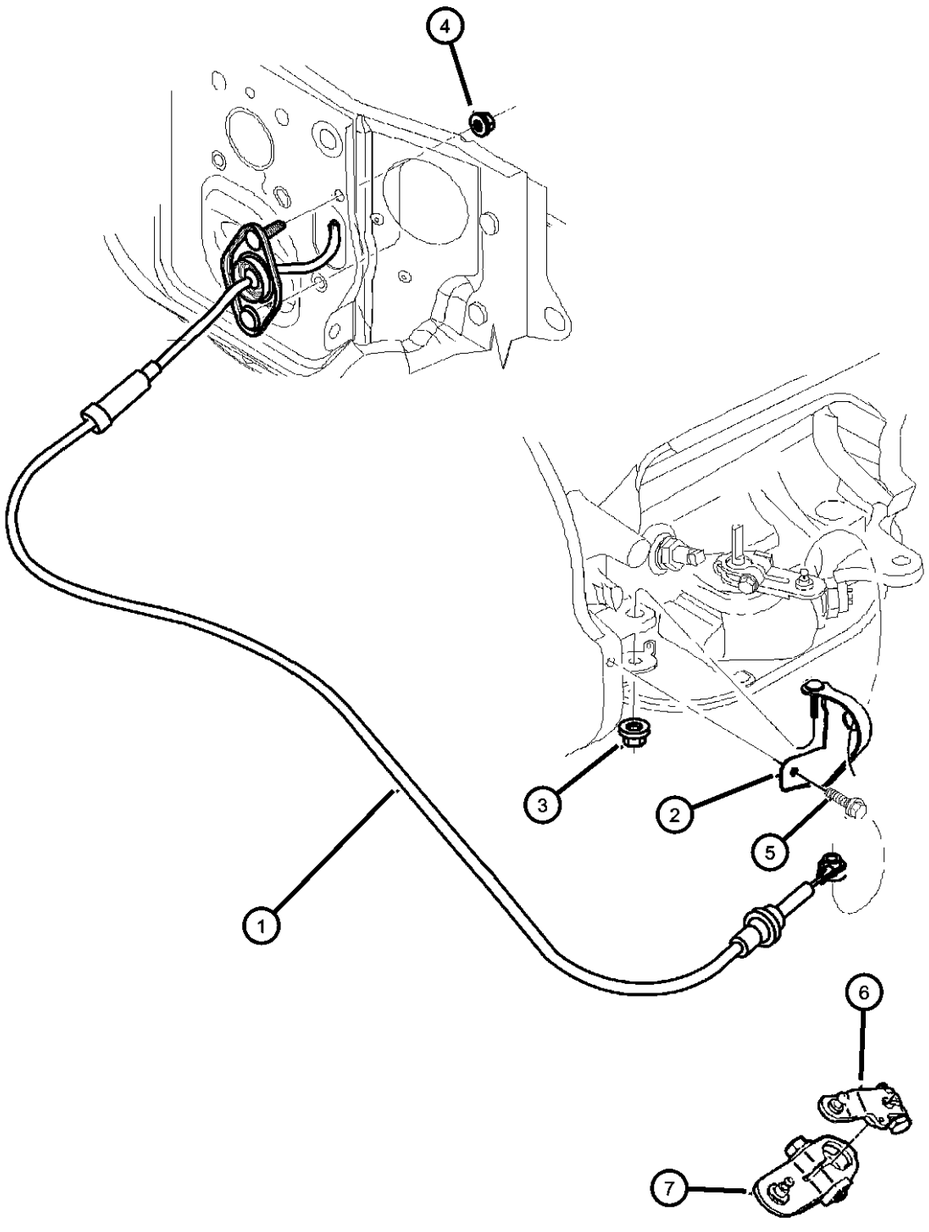

ITEM	PART NUMBER	QTY	LINE	SERIES	BODY	ENGINE	TRANS	TRIM	DESCRIPTION

NOTE:
Sales Codes:
EHC = 3.9L MAGNUM V6 Engine

1	52107700	1					DGK, DGT		CABLE, Shift
2	52107705	1					DGK		BRACKET, Shift Cable
3	06502697	1					DGK, DGT		NUT, Hex Flange Lock, M12x1.75
4	06503269	2					DG0		NUT, Hex, M10-1.5
5	06503269	2							SCREW, (.312-18x.750), (NOT SERVICED)
6	52079065	1					DGK, DGT		LEVER, Throttle Valve
7	52107678	1					DGK		LEVER, Manual Control

DAKOTA (AN)

SERIES	LINE	BODY	ENGINE	TRANSMISSION
L = Quad Cab	1 = Dakota 2WD	31 = CLUB CAB 2-DR 6.5 FT BOX	EPO = 2.5L 4 Cyl.	DDC = TRANSMISSION - 5-SPEED HD MANUAL
L = Regular Cab	5 = Dakota 4WD	61 = REG CAB 6.5 FT BOX	EHO = 3.9L 6 Cyl.	DG4 = TRANSMISSION-MULTI-SPEED AUTO, 45RFE
L = Club Cab		84 = CREW CAB 4-DR W.B.1	EMO = 5.9L 8 Cyl.	DGK = TRANSMISSION - 4-SPD. AUTOMATIC,42RE
			EVO = 4.7L Magnum	DGT = TRANSMISSION - 4-SPD. AUTOMATIC,46RE
			EHC = 3.9L SMPI V6	DGO = AUTO. TRANS.
			EML = 5.9L V8 MPI Engine	
			EPE = 2.5L POWER TECH I-4 Cyl.	
			EVA = 4.7L V8 MPI	

Group - 45RFE

Automatic Transmission Multi-Speed

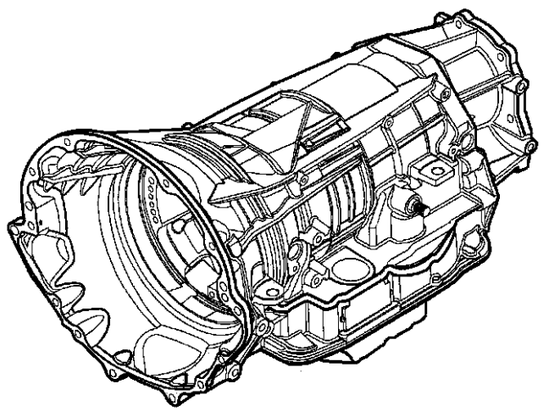

45RFE-100 Transmission Assembly 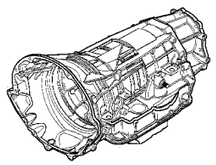	**45RFE-1200** Gearshift Controls 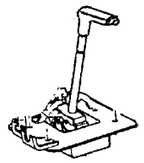	**45RFE-1300** Seal and Shim Packages 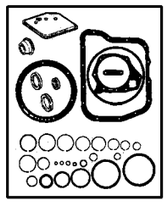	**45RFE-200** Case and Extension 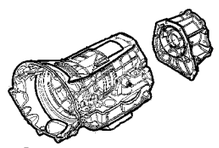
45RFE-300 Oil Pump 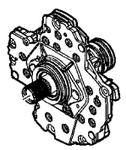	**45RFE-400** Gear Train 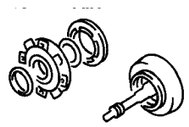	**45RFE-700** Valve Body 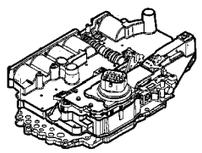	

Group - 45RFE Automatic Transmission Multi-Speed

Illustration Title — Group-Fig. No.

Transmission Assembly
Transmission [45RFE] [DG4] ..... Fig. 45RFE - 110

Case and Extension
Case & Related Parts [45RFE] [DG4] ..... Fig. 45RFE - 210
Adapter [45RFE] [DG4] ..... Fig. 45RFE - 220

Oil Pump
Oil Pump [45REF] [DG4] ..... Fig. 45RFE - 310

Gear Train
Input Clutch [45RFE] [DG4] ..... Fig. 45RFE - 410
Underdrive [45RFE] [DG4] ..... Fig. 45RFE - 420
Overdrive [45RFE] [DG4] ..... Fig. 45RFE - 430
2/4 Clutch Retainer [45RFE] [DG4] ..... Fig. 45RFE - 440
Input / Reverse Planetary [45RFE] [DG4] ..... Fig. 45RFE - 450
Reaction Annulus / Sun Gear [45RFE] [DG4] ..... Fig. 45RFE - 460
Low / Reverse Clutch ..... Fig. 45RFE - 470

Valve Body
Valve Body [45RFE] [DG4] ..... Fig. 45RFE - 710
Parking Sprag [45RFE] [DG4] ..... Fig. 45RFE - 720

Gearshift Controls
Gearshift Controls [45RFE] [DG4] ..... Fig. 45RFE - 1210

Seal and Shim Packages
LR Clutch [45RFE] [DG4] ..... Fig. 45RFE - 1310
Input Clutch Plate [45RFE] [DG4] ..... Fig. 45RFE - 1320
OVERHAUL [45RFE] [DG4] ..... Fig. 45RFE - 1330
Input Clutch [45RFE] [DG4] ..... Fig. 45RFE - 1340
Planetary Plate [45RFE] [DG4] ..... Fig. 45RFE - 1350
2 & 4 Clutch [45RFE] [DG4] ..... Fig. 45RFE - 1360

Transmission [45RFE] [DG4]
Figure 45RFE-110

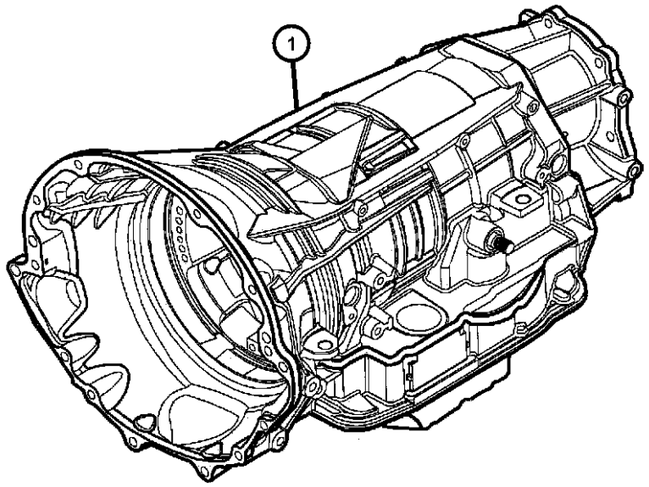

ITEM	PART NUMBER	QTY	LINE	SERIES	BODY	ENGINE	TRANS	TRIM	DESCRIPTION
NOTES:									
Sales Codes:									
EVA = 4.7L Power Tech Engine.									
1									TRANSMISSION KIT, Automatic
	05015265AA	1	5				DG4		52119091 Transmission Includes Converter
	R5018169AA								Mopar Remanufactured Part
	05015266AA	1	1				DG4		52119098 Transmission Includes Converter
	R5018205AA								Mopar Remanufactured Part

DAKOTA (AN)

SERIES	LINE	BODY	ENGINE	TRANSMISSION
L = Quad Cab	1 = Dakota 2WD	31 = CLUB CAB 2-DR 6.5 FT BOX	EPO = 2.5L 4 Cyl.	DDC = TRANSMISSION - 5-SPEED HD MANUAL
L = Regular Cab	5 = Dakota 4WD	61 = REG CAB 6.5 FT BOX	EHO = 3.9L 6 Cyl.	DG4 = TRANSMISSION-MULTI-SPEED AUTO, 45RFE
L = Club Cab		84 = CREW CAB 4-DR W.B.1	EMO = 5.9L 8 Cyl.	DGK = TRANSMISSION - 4-SPD. AUTOMATIC,42RE
			EVO = 4.7L Magnum	DGT = TRANSMISSION - 4-SPD. AUTOMATIC,46RE
			EHC = 3.9L SMPI V6	DGO = AUTO. TRANS.
			EML = 5.9L V8 MPI Engine	
			EPE = 2.5L POWER TECH I-4 Cyl.	
			EVA = 4.7L V8 MPI	

Case & Related Parts [45RFE] [DG4]
Figure 45RFE-210

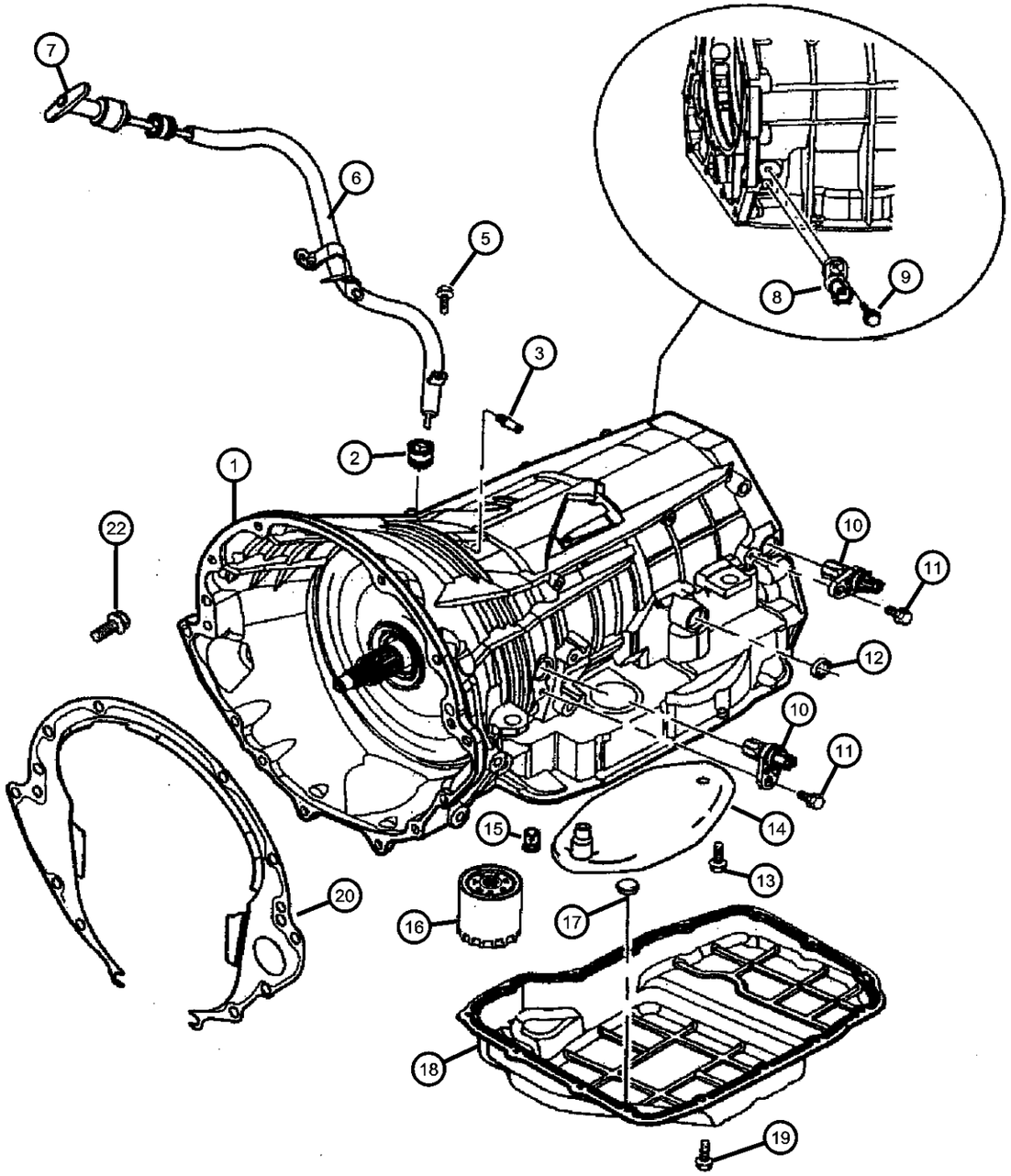

ITEM	PART NUMBER	QTY	LINE	SERIES	BODY	ENGINE	TRANS	TRIM	DESCRIPTION
NOTES:									
Sales Codes:									
EVA = 4.7L Power Tech Engine.									
1									CASE, Transmission
	04799613	1	5				DG4		
		1	1				DG4		
2									GROMMET
	04810021	1	5				DG4		
		1	1				DG4		
3									VENT, Transmission
	04799861AA	1	5				DG4		
		1	1				DG4		
-4	52104212	1					DG4		TUBE, Vent
5	06501979	1					DG4		SCREW AND WASHER, Hex Head, M6x1x17
6	52104134	1					DG4		TUBE, Transmission Oil Filler
7	52104137	1					DG4		INDICATOR, Transmission Fluid Level
8									TRANSDUCER, Pressure Sensor
	04799758	1	5				DG4		
		1	1				DG4		
9									BOLT, M6x1.00x20
	06101331	1	5				DG4		
		1	1				DG4		
10									SENSOR, Transmission Output Speed
	04799061	2	5				DG4		
		2	1				DG4		
11									BOLT, M6x1.00x20
	06101331	1	5				DG4		
		1	1				DG4		
12									SEAL
	04799346	1	5				DG4		
		1	1				DG4		

DAKOTA (AN)

SERIES	LINE	BODY	ENGINE	TRANSMISSION
L = Quad Cab	1 = Dakota 2WD	31 = CLUB CAB 2-DR 6.5 FT BOX	EPO = 2.5L 4 Cyl.	DDC = TRANSMISSION - 5-SPEED HD MANUAL
L = Regular Cab	5 = Dakota 4WD	61 = REG CAB 6.5 FT BOX	EHO = 3.9L 6 Cyl.	DG4 = TRANSMISSION-MULTI-SPEED AUTO, 45RFE
L = Club Cab		84 = CREW CAB 4-DR W.B.1	EMO = 5.9L 8 Cyl.	DGK = TRANSMISSION - 4-SPD. AUTOMATIC,42RE
			EVO = 4.7L Magnum	DGT = TRANSMISSION - 4-SPD. AUTOMATIC,46RE
			EHC = 3.9L SMPI V6	DGO = AUTO. TRANS.
			EML = 5.9L V8 MPI Engine	
			EPE = 2.5L POWER TECH I-4 Cyl.	
			EVA = 4.7L V8 MPI	

AR = use ase required - = Non illustrrated part

Case & Related Parts [45RFE] [DG4]
Figure 45RFE-210

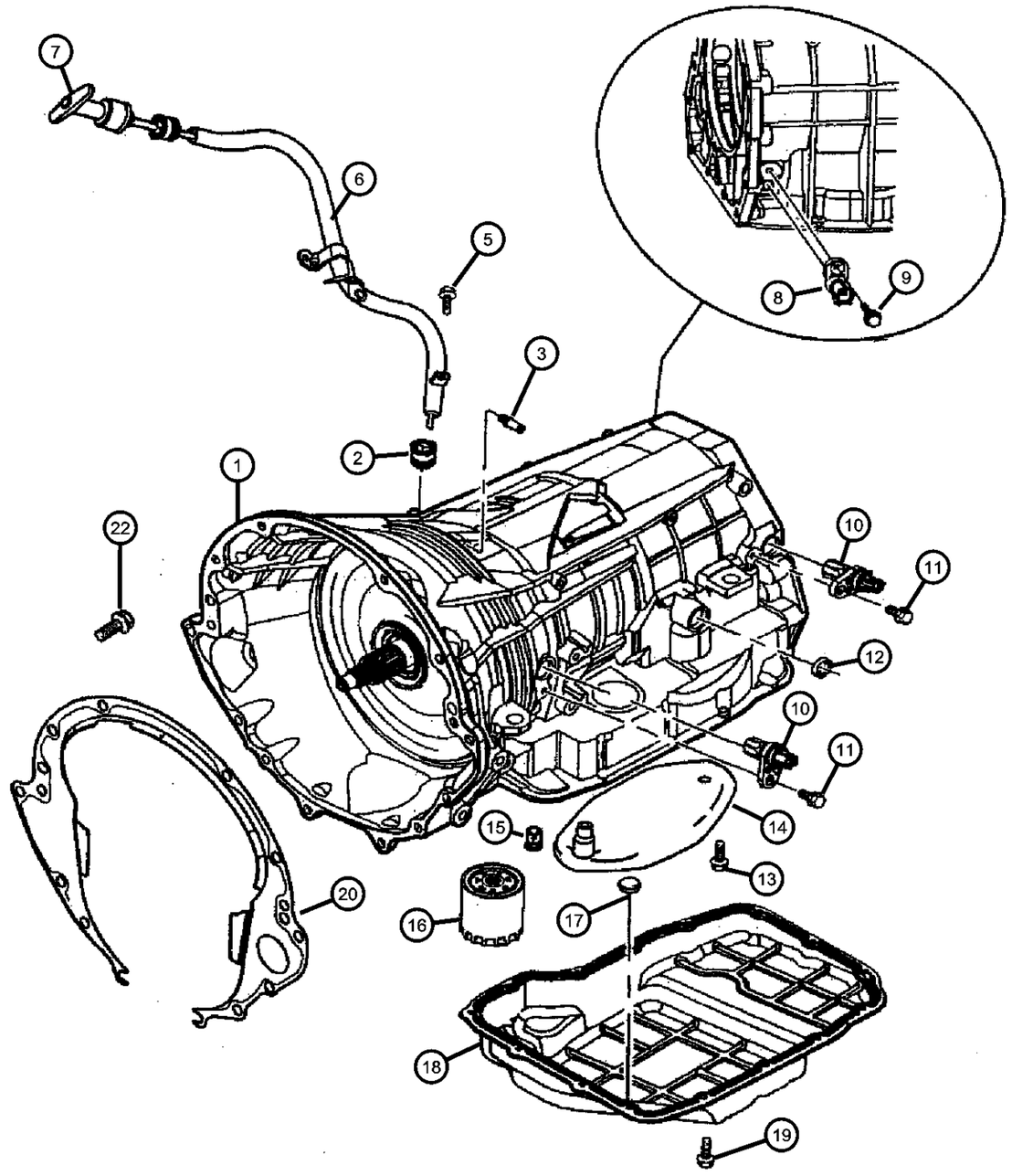

ITEM	PART NUMBER	QTY	LINE	SERIES	BODY	ENGINE	TRANS	TRIM	DESCRIPTION
13	06503232	1	5				DG4		SCREW, Pan Head, M5 x 0.8 x 12.60
14									FILTER PACKAGE, Transmission Oil
	05013470AC	1	5				DG4		
	05015267AC	1	1				DG4		
15									VALVE, Flow Control
	04799681	1	5				DG4		
		1	1				DG4		
16									FILTER, Transmission Oil
	04799662	1	5				DG4		
		1	1				DG4		
17									MAGNET, Transmission
	04446728	1	5				DG4		
		1	1				DG4		
18									PAN, Transmission Oil
	04800078AA	1	1				DG4		
	05013681AA	1	5				DG4		
19	06101221	15	1				DG4		SCREW
20	52107715	1					DG4		COVER, Converter
-21	04799433AB	2	1				DG4		NUT, Transmission Case
22	06022266	4					DG0		SCREW, Hex Head, .375-16x1.5, Case to Cylinder Block

DAKOTA (AN)

SERIES	LINE	BODY	ENGINE	TRANSMISSION
L = Quad Cab	1 = Dakota 2WD	31 = CLUB CAB 2-DR 6.5 FT BOX	EPO = 2.5L 4 Cyl.	DDC = TRANSMISSION - 5-SPEED HD MANUAL
L = Regular Cab	5 = Dakota 4WD	61 = REG CAB 6.5 FT BOX	EHO = 3.9L 6 Cyl.	DG4 = TRANSMISSION-MULTI-SPEED AUTO, 45RFE
L = Club Cab		84 = CREW CAB 4-DR W.B.1	EMO = 5.9L 8 Cyl.	DGK = TRANSMISSION - 4-SPD. AUTOMATIC,42RE
			EVO = 4.7L Magnum	DGT = TRANSMISSION - 4-SPD. AUTOMATIC,46RE
			EHC = 3.9L SMPI V6	DGO = AUTO. TRANS.
			EML = 5.9L V8 MPI Engine	
			EPE = 2.5L POWER TECH I-4 Cyl.	
			EVA = 4.7L V8 MPI	

AR = use ase required - = Non illustrrated part

Adapter [45RFE] [DG4]
Figure 45RFE-220

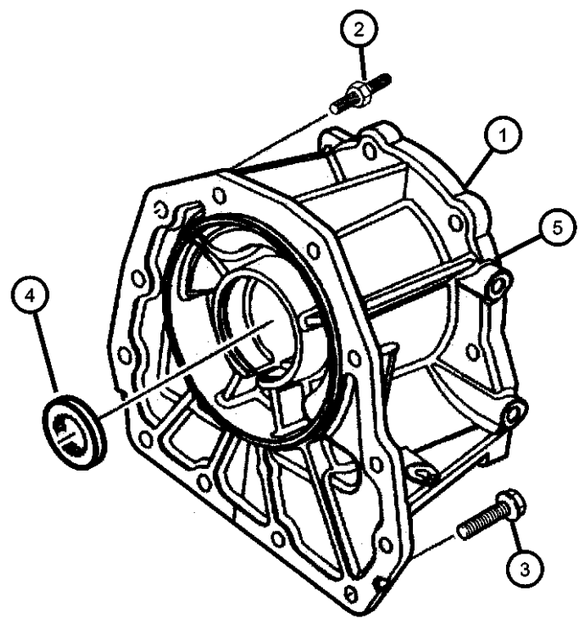

ITEM	PART NUMBER	QTY	LINE	SERIES	BODY	ENGINE	TRANS	TRIM	DESCRIPTION

NOTES

NOTES:
Sales Codes:
EVA = 4.7L Power Tech Engine.

1	52107719	1	5				DG4		ADAPTER, Transfer Case
2	06505064AA	2	5				DG4		STUD, M10x1.5x62
3	06504774	10	5				DG4		SCREW AND WASHER, Hex Head, M10x1.5x37
4	04167929	1	5			EM0, EV0			SEAL, Input Gear
5	04799495	1	1				DG4		HOUSING, Transmission Rear Extension
-6	04531216AB	1	1				DG4		SEAL, Output Shaft

DAKOTA (AN)

SERIES	LINE	BODY	ENGINE	TRANSMISSION
L = Quad Cab	1 = Dakota 2WD	31 = CLUB CAB 2-DR 6.5 FT BOX	EPO = 2.5L 4 Cyl.	DDC = TRANSMISSION - 5-SPEED HD MANUAL
L = Regular Cab	5 = Dakota 4WD	61 = REG CAB 6.5 FT BOX	EHO = 3.9L 6 Cyl.	DG4 = TRANSMISSION-MULTI-SPEED AUTO, 45RFE
L = Club Cab		84 = CREW CAB 4-DR W.B.1	EMO = 5.9L 8 Cyl.	DGK = TRANSMISSION - 4-SPD. AUTOMATIC,42RE
			EVO = 4.7L Magnum	DGT = TRANSMISSION - 4-SPD. AUTOMATIC,46RE
			EHC = 3.9L SMPI V6	DGO = AUTO. TRANS.
			EML = 5.9L V8 MPI Engine	
			EPE = 2.5L POWER TECH I-4 Cyl.	
			EVA = 4.7L V8 MPI	

Oil Pump [45REF] [DG4]
Figure 45RFE-310

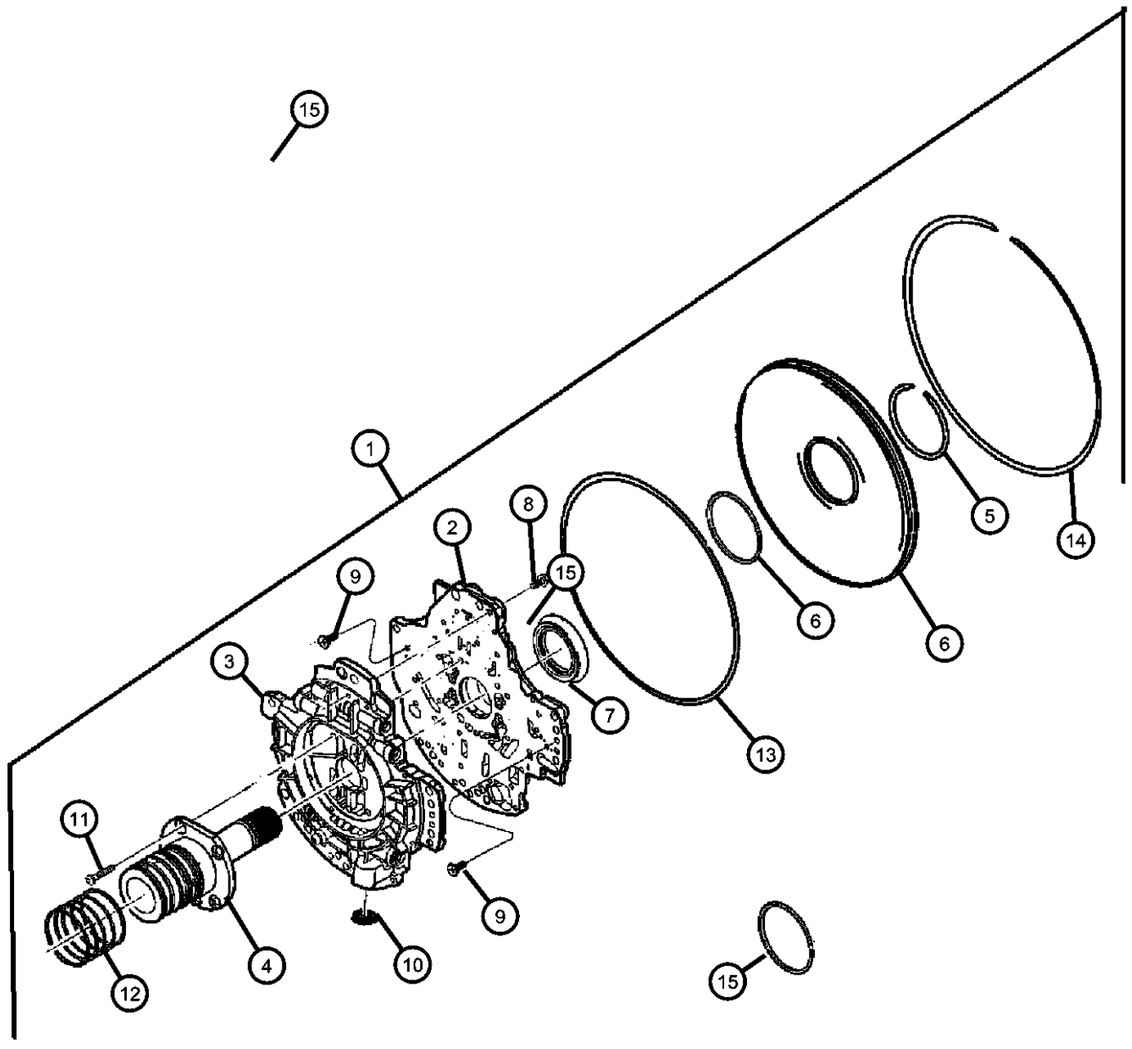

ITEM	PART NUMBER	QTY	LINE	SERIES	BODY	ENGINE	TRANS	TRIM	DESCRIPTION
1									PUMP PACKAGE, Transmission
	05072589AA	1	5				DG4		
		1	1				DG4		
2		1							HOUSING, Pump, (NOT SERVICED)
3		1							BODY, Oil Pump Valve, (NOT SERVICED)
4		1							SUPPORT, Reaction Shaft, (NOT SERVICED)
5									SNAP RING, Transmission
	04799082	1	5				DG4		
		1	1				DG4		
6									COVER, Oil Pump
	04799609	1	5				DG4		
		1	1				DG4		
7									SEAL, Transmission Oil Pump
	04617919	1	5				DG4		
		1	1				DG4		
8									SCREW AND WASHER, Pan Head, M5x.8x25
	06500215	24	5				DG4		
		24	1				DG4		
9									SCREW, Pan Head, M5 x 0.8 x 12.60
	06503232	1	5				DG4		
		1	1				DG4		
10									SEAL, Oil Pump
	04799964AA	1	5				DG4		
		1	1				DG4		
11									SCREW, Button Head
	06504661	5	5				DG4		
		5	1				DG4		
12									RING, Transmission
	04799056	5	5				DG4		
		5	1				DG4		

DAKOTA (AN)

SERIES	LINE	BODY	ENGINE	TRANSMISSION
L = Quad Cab	1 = Dakota 2WD	31 = CLUB CAB 2-DR 6.5 FT BOX	EPO = 2.5L 4 Cyl.	DDC = TRANSMISSION - 5-SPEED HD MANUAL
L = Regular Cab	5 = Dakota 4WD	61 = REG CAB 6.5 FT BOX	EHO = 3.9L 6 Cyl.	DG4 = TRANSMISSION-MULTI-SPEED AUTO, 45RFE
L = Club Cab		84 = CREW CAB 4-DR W.B.1	EMO = 5.9L 8 Cyl.	DGK = TRANSMISSION - 4-SPD. AUTOMATIC,42RE
			EVO = 4.7L Magnum	DGT = TRANSMISSION - 4-SPD. AUTOMATIC,46RE
			EHC = 3.9L SMPI V6	DGO = AUTO. TRANS.
			EML = 5.9L V8 MPI Engine	
			EPE = 2.5L POWER TECH I-4 Cyl.	
			EVA = 4.7L V8 MPI	

Oil Pump [45REF] [DG4]
Figure 45RFE-310

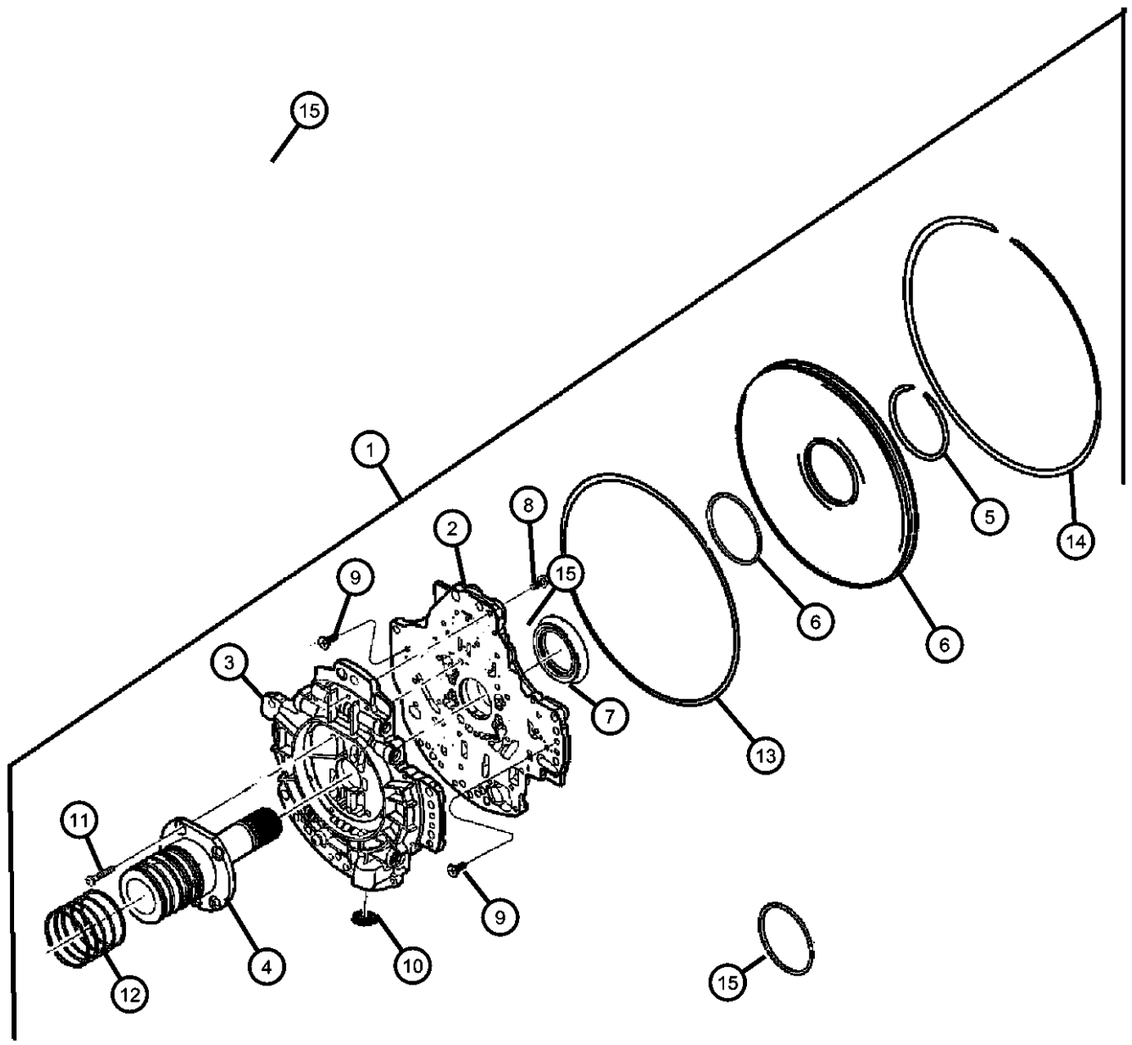

ITEM	PART NUMBER	QTY	LINE	SERIES	BODY	ENGINE	TRANS	TRIM	DESCRIPTION
13									O RING, Oil Pump, .
	04799003	1	5				DG4		
		1	1				DG4		
14									SNAP RING, Transmission
	04799005	1	5				DG4		
		1	1				DG4		
15									SEAL, Torque Converter Hub
	04736547	1	5				DG4		
		1	1				DG4		

DAKOTA (AN)

SERIES	LINE	BODY	ENGINE	TRANSMISSION
L = Quad Cab L = Regular Cab L = Club Cab	1 = Dakota 2WD 5 = Dakota 4WD	31 = CLUB CAB 2-DR 6.5 FT BOX 61 = REG CAB 6.5 FT BOX 84 = CREW CAB 4-DR W.B.1	EPO = 2.5L 4 Cyl. EHO = 3.9L 6 Cyl. EMO = 5.9L 8 Cyl. EVO = 4.7L Magnum EHC = 3.9L SMPI V6 EML = 5.9L V8 MPI Engine EPE = 2.5L POWER TECH I-4 Cyl. EVA = 4.7L V8 MPI	DDC = TRANSMISSION - 5-SPEED HD MANUAL DG4 = TRANSMISSION-MULTI-SPEED AUTO, 45RFE DGK = TRANSMISSION - 4-SPD. AUTOMATIC,42RE DGT = TRANSMISSION - 4-SPD. AUTOMATIC,46RE DGO = AUTO. TRANS.

Input Clutch [45RFE] [DG4]
Figure 45RFE-410

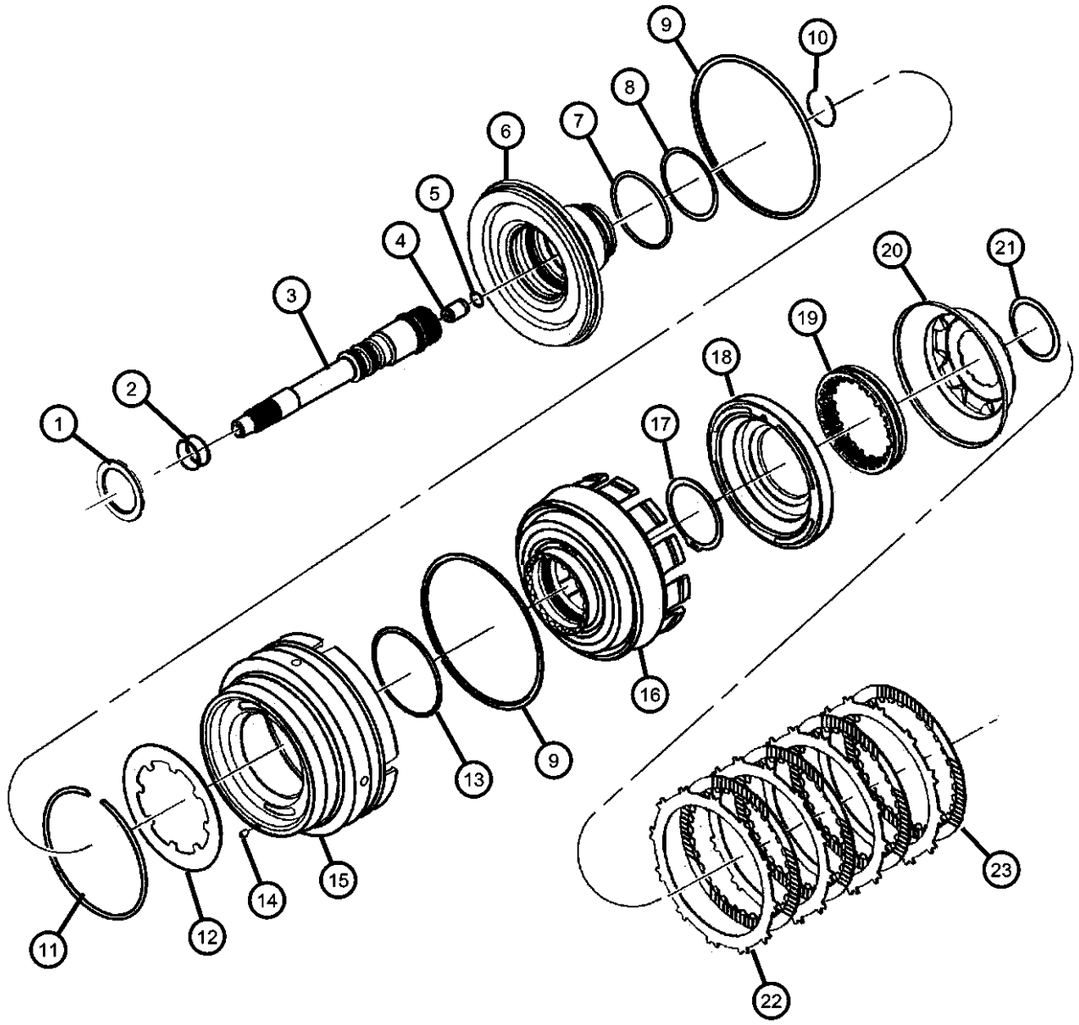

ITEM	PART NUMBER	QTY	LINE	SERIES	BODY	ENGINE	TRANS	TRIM	DESCRIPTION
NOTES:									
Sales Codes:									
EVA = 4.7L Power Tech Engine.									
1									THRUST BEARING, Needle Roller
	04799469	1	5				DG4		
		1	1				DG4		
2									SEAL, Input Shaft, PKG 05013090AA
	04799539	2	5				DG4		
		2	1				DG4		
3									SHAFT, Input
	04799537	1	5				DG4		
		1	1				DG4		
4									CHECK VALVE, Transmission
	04799974AA	1	5				DG4		
		1	1				DG4		
5									SNAP RING
	04799978AA	1	5				DG4		
		1	1				DG4		
6									HUB, Input Clutch
	04799536AC	1	5				DG4		
		1	1				DG4		
7									O RING, Transmission Clutch, PKG 05013090AA
	04799073	1	5				DG4		
		1	1				DG4		
8									O RING, Transmission Clutch, PKG 05013090AA
	04799755	1	5				DG4		
		1	1				DG4		
9									SEAL, Input
	04799090	1	5				DG4		
		1	1				DG4		
10									SNAP RING, Input Shaft

DAKOTA (AN)

SERIES	LINE	BODY	ENGINE	TRANSMISSION
L = Quad Cab L = Regular Cab L = Club Cab	1 = Dakota 2WD 5 = Dakota 4WD	31 = CLUB CAB 2-DR 6.5 FT BOX 61 = REG CAB 6.5 FT BOX 84 = CREW CAB 4-DR W.B.1	EPO = 2.5L 4 Cyl. EHO = 3.9L 6 Cyl. EMO = 5.9L 8 Cyl. EVO = 4.7L Magnum EHC = 3.9L SMPI V6 EML = 5.9L V8 MPI Engine EPE = 2.5L POWER TECH I-4 Cyl. EVA = 4.7L V8 MPI	DDC = TRANSMISSION - 5-SPEED HD MANUAL DG4 = TRANSMISSION-MULTI-SPEED AUTO, 45RFE DGK = TRANSMISSION - 4-SPD. AUTOMATIC,42RE DGT = TRANSMISSION - 4-SPD. AUTOMATIC,46RE DGO = AUTO. TRANS.

Input Clutch [45RFE] [DG4]
Figure 45RFE-410

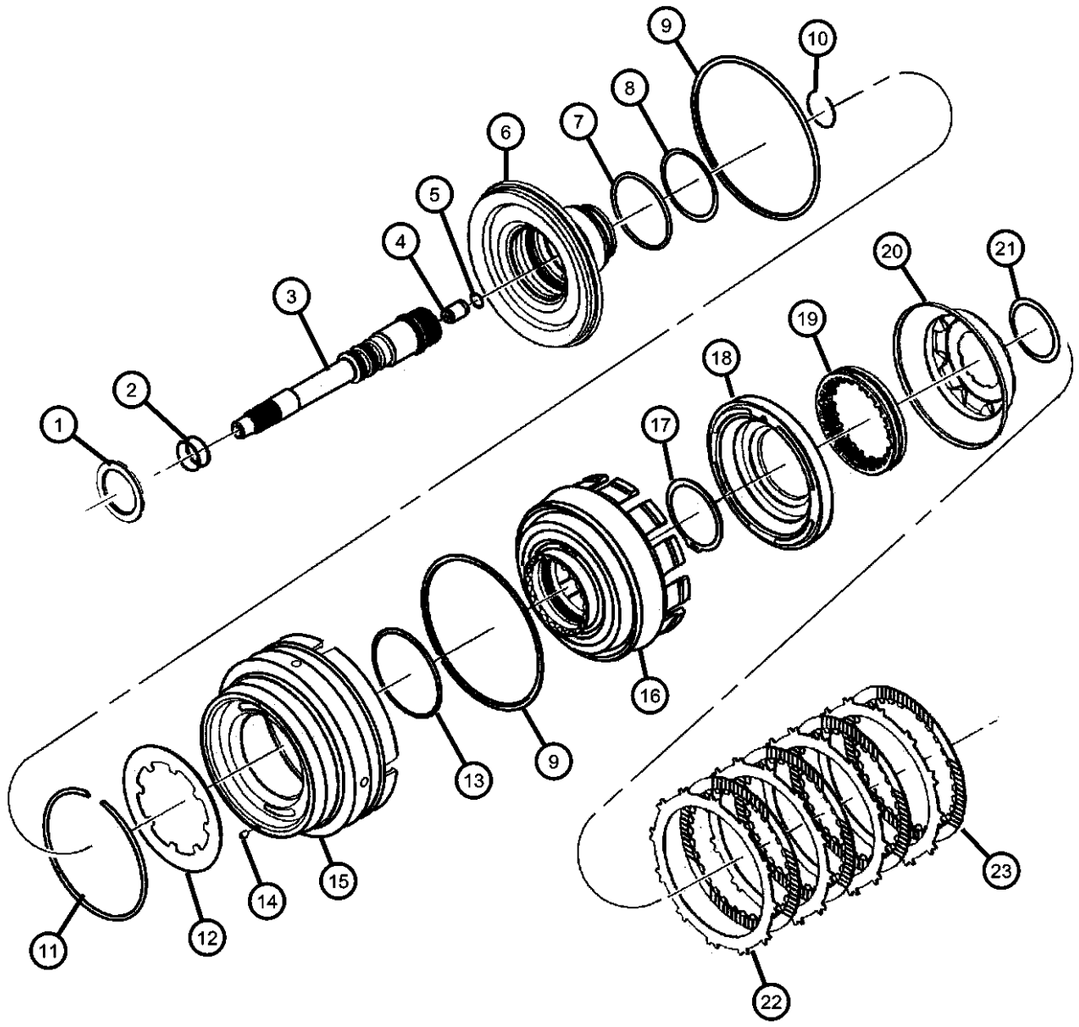

ITEM	PART NUMBER	QTY	LINE	SERIES	BODY	ENGINE	TRANS	TRIM	DESCRIPTION
	04799538	1	5				DG4		
		1	1				DG4		
11									SNAP RING, Transmission
	04799088	1	5				DG4		
		1	1				DG4		
12									SPRING, Piston Return
	04799087	1	5				DG4		
		1	1				DG4		
13									O RING, Reverse & O/Drive Clutch Piston, Transmission, PKG 05013090AA
	04799089	1	5				DG4		
		1	1				DG4		
14									FILTER, Reverse And O/D Clutch
	04531903	1	5				DG4		
		1	1				DG4		
15									PISTON, Reverse and Overdrive
	04799645	1	5				DG4		
		1	1				DG4		
16									RETAINER, Transmission Input Clutch
	04799648	1	5				DG4		
		1	1				DG4		
17									SNAP RING
	04799247	1	5				DG4		
		1	1				DG4		
18									PISTON, Underdrive
	04799650	1	5				DG4		
		1	1				DG4		
19									SPRING, Undredrive Piston, PKG 05013090AA
	04799101	1	5				DG4		
		1	1				DG4		

DAKOTA (AN)

SERIES	LINE	BODY	ENGINE	TRANSMISSION
L = Quad Cab	1 = Dakota 2WD	31 = CLUB CAB 2-DR 6.5 FT BOX	EPO = 2.5L 4 Cyl.	DDC = TRANSMISSION - 5-SPEED HD MANUAL
L = Regular Cab	5 = Dakota 4WD	61 = REG CAB 6.5 FT BOX	EHO = 3.9L 6 Cyl.	DG4 = TRANSMISSION-MULTI-SPEED AUTO, 45RFE
L = Club Cab		84 = CREW CAB 4-DR W.B.1	EMO = 5.9L 8 Cyl.	DGK = TRANSMISSION - 4-SPD. AUTOMATIC,42RE
			EVO = 4.7L Magnum	DGT = TRANSMISSION - 4-SPD. AUTOMATIC,46RE
			EHC = 3.9L SMPI V6	DGO = AUTO. TRANS.
			EML = 5.9L V8 MPI Engine	
			EPE = 2.5L POWER TECH I-4 Cyl.	
			EVA = 4.7L V8 MPI	

AR = use ase required - = Non illustrrated part

Input Clutch [45RFE] [DG4]
Figure 45RFE-410

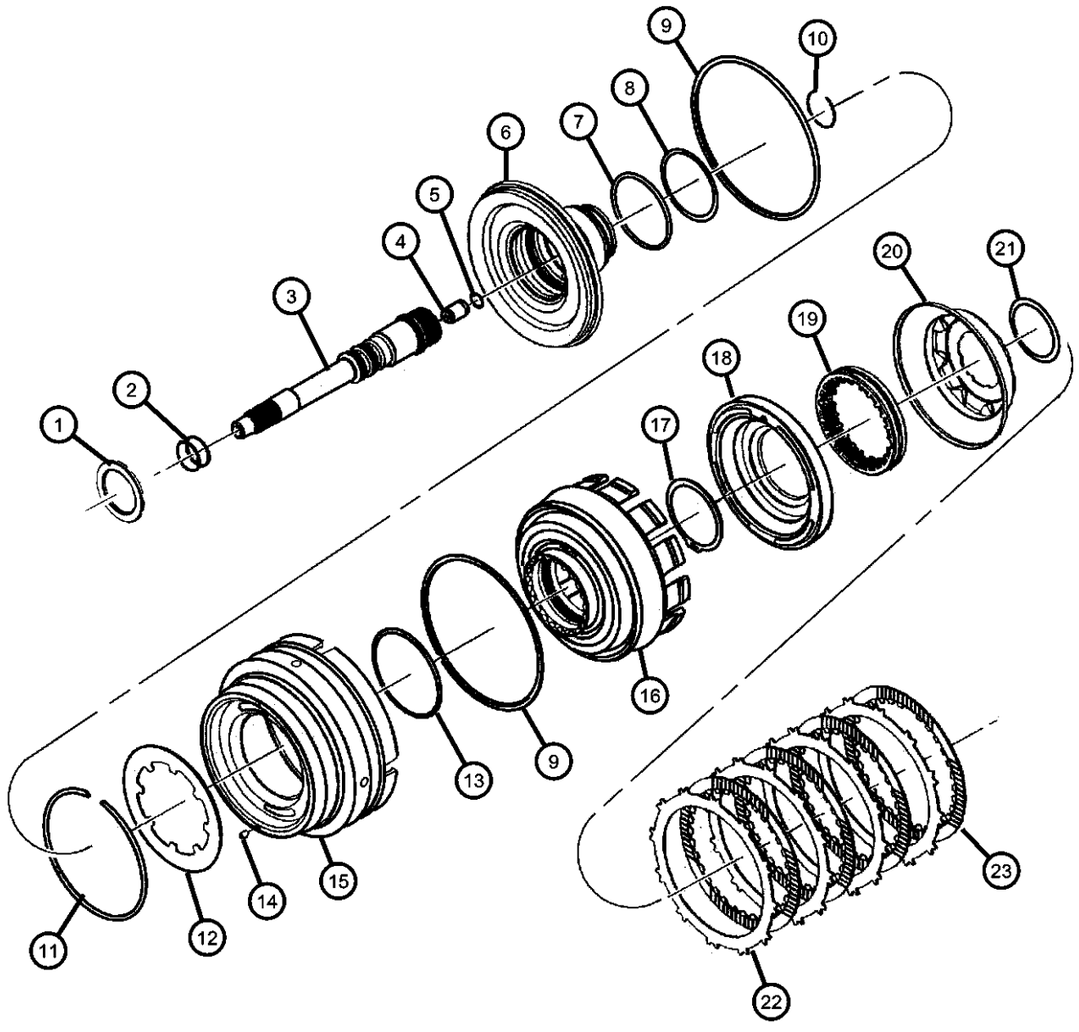

ITEM	PART NUMBER	QTY	LINE	SERIES	BODY	ENGINE	TRANS	TRIM	DESCRIPTION
20									PISTON, Underdrive
	04799652	1	5				DG4		
		1	1				DG4		
21									SNAP RING, Transmission, PKG 05013090AA
	04799103	1	5				DG4		
		1	1				DG4		
22		1							PLATE, PKG 05013090AA, (NOT SERVICED)
23		1							DISC, Clutch, PKG 05013090AA, (NOT SERVICED)

DAKOTA (AN)

SERIES	LINE	BODY	ENGINE	TRANSMISSION
L = Quad Cab	1 = Dakota 2WD	31 = CLUB CAB 2-DR 6.5 FT BOX	EPO = 2.5L 4 Cyl.	DDC = TRANSMISSION - 5-SPEED HD MANUAL
L = Regular Cab	5 = Dakota 4WD	61 = REG CAB 6.5 FT BOX	EHO = 3.9L 6 Cyl.	DG4 = TRANSMISSION-MULTI-SPEED AUTO, 45RFE
L = Club Cab		84 = CREW CAB 4-DR W.B.1	EMO = 5.9L 8 Cyl.	DGK = TRANSMISSION - 4-SPD. AUTOMATIC,42RE
			EVO = 4.7L Magnum	DGT = TRANSMISSION - 4-SPD. AUTOMATIC,46RE
			EHC = 3.9L SMPI V6	DGO = AUTO. TRANS.
			EML = 5.9L V8 MPI Engine	
			EPE = 2.5L POWER TECH I-4 Cyl.	
			EVA = 4.7L V8 MPI	

AR = use ase required - = Non illustrrated part

Underdrive [45RFE] [DG4]
Figure 45RFE-420

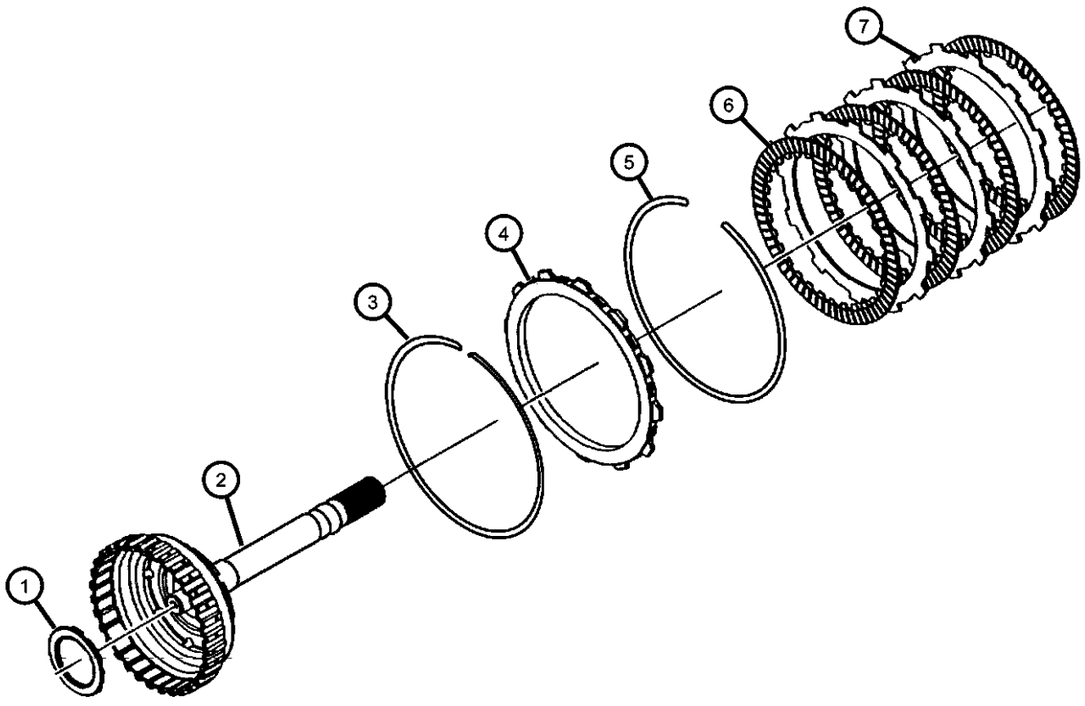

ITEM	PART NUMBER	QTY	LINE	SERIES	BODY	ENGINE	TRANS	TRIM	DESCRIPTION
NOTES:									
Sales Codes:									
EVA = 4.7L Power Tech Engine.									
1									THRUST BEARING, Needle Roller
	04799469	1	5				DG4		
		1	1				DG4		
2									HUB AND SHAFT, Underdrive Clutch
	04799546	1	5				DG4		
		1	1				DG4		
3									SNAP RING, Transmission
	04799760	1	5				DG4		
		1	1				DG4		
4									PLATE, Transmission Clutch Reaction
	04799107AB	AR	5				DG4		7.06 / 7.16
		AR	1				DG4		7.06 / 7.16
	04799108AB	AR	5				DG4		3.05 / 3.21
		AR	1				DG4		3.05 / 3.21
	04799109AB	AR	5				DG4		3.60/ 3.37
		AR	1				DG4		3.60/ 3.37
5		AR							SNAP RING, PKG 05013090AA, (NOT SERVICED),
6		AR							DISC, Clutch, PKG 05013090AA, (NOT SERVICED)
7		AR							PLATE, PKG 05013090AA, (NOT SERVICED)

DAKOTA (AN)

SERIES	LINE	BODY	ENGINE	TRANSMISSION
L = Quad Cab	1 = Dakota 2WD	31 = CLUB CAB 2-DR 6.5 FT BOX	EPO = 2.5L 4 Cyl.	DDC = TRANSMISSION - 5-SPEED HD MANUAL
L = Regular Cab	5 = Dakota 4WD	61 = REG CAB 6.5 FT BOX	EHO = 3.9L 6 Cyl.	DG4 = TRANSMISSION-MULTI-SPEED AUTO, 45RFE
L = Club Cab		84 = CREW CAB 4-DR W.B.1	EMO = 5.9L 8 Cyl.	DGK = TRANSMISSION - 4-SPD. AUTOMATIC,42RE
			EVO = 4.7L Magnum	DGT = TRANSMISSION - 4-SPD. AUTOMATIC,46RE
			EHC = 3.9L SMPI V6	DGO = AUTO. TRANS.
			EML = 5.9L V8 MPI Engine	
			EPE = 2.5L POWER TECH I-4 Cyl.	
			EVA = 4.7L V8 MPI	

Overdrive [45RFE] [DG4]
Figure 45RFE-430

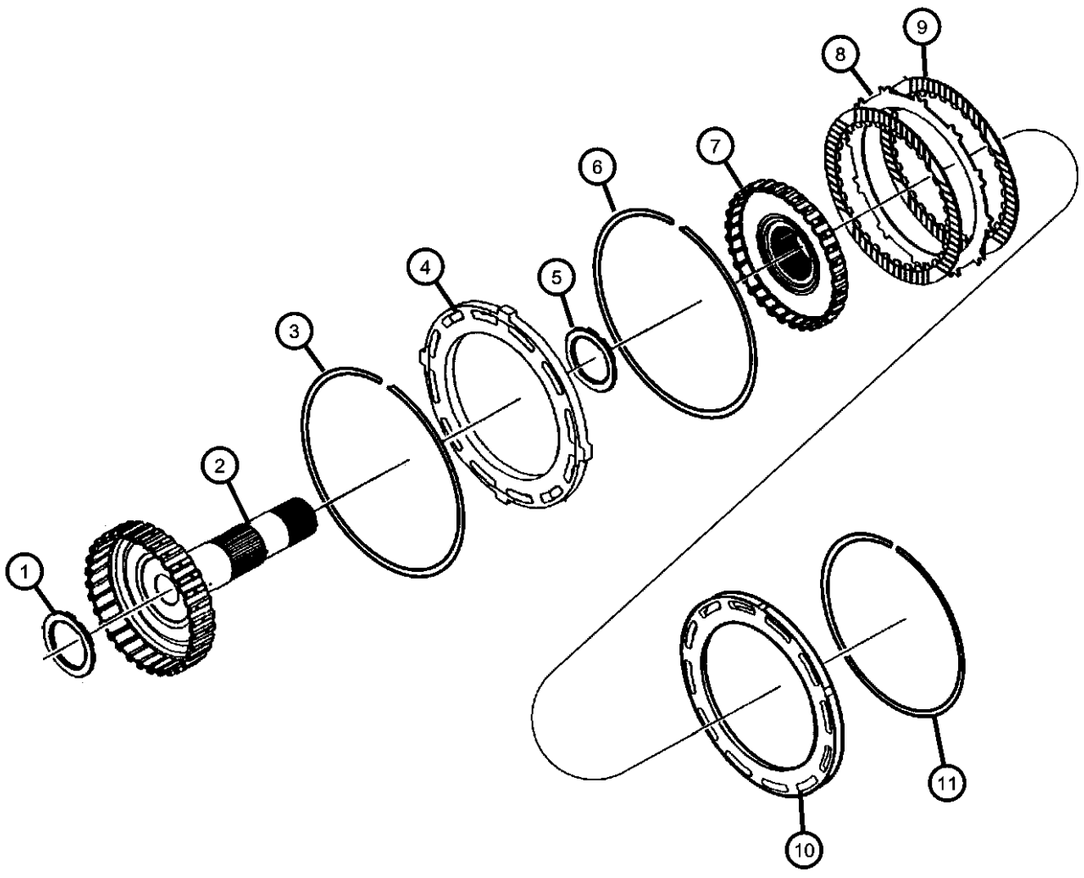

ITEM	PART NUMBER	QTY	LINE	SERIES	BODY	ENGINE	TRANS	TRIM	DESCRIPTION
NOTES:									
Sales Codes:									
EVA = 4.7L Power Tech Engine.									
1									THRUST BEARING, Needle Roller
	04799469	1	5				DG4		
		1	1				DG4		
2									HUB AND SHAFT, Overdrive Clutch
	04799550	1	5				DG4		
		1	1				DG4		
3									SNAP RING, Overdrive Clutch
	04799118	1	5				DG4		
		1	1				DG4		
4									PLATE, Clutch Pressure
	04799116	1	5				DG4		
		1	1				DG4		
5									THRUST BEARING, Needle Roller
	04799469	1	5				DG4		
		1	1				DG4		
6									SNAP RING, Transmission
	04799117	1	5				DG4		
		1	1				DG4		
7									HUB AND SHAFT, Reverse Clutch
	04799556	1	5				DG4		
		1	1				DG4		
8		1							PLATE, PKG 05013090AA, (NOT SERVICED)
9		1							DISC, Clutch, PKG 05013090AA, (NOT SERVICED)
10									PLATE, Transmission Clutch Reaction
	04799121	1	5				DG4		
		1	1				DG4		
11		1							SNAP RING, PKG 05013090AA, (NOT SERVICED)

DAKOTA (AN)

SERIES	LINE	BODY	ENGINE	TRANSMISSION
L = Quad Cab L = Regular Cab L = Club Cab	1 = Dakota 2WD 5 = Dakota 4WD	31 = CLUB CAB 2-DR 6.5 FT BOX 61 = REG CAB 6.5 FT BOX 84 = CREW CAB 4-DR W.B.1	EPO = 2.5L 4 Cyl. EHO = 3.9L 6 Cyl. EMO = 5.9L 8 Cyl. EVO = 4.7L Magnum EHC = 3.9L SMPI V6 EML = 5.9L V8 MPI Engine EPE = 2.5L POWER TECH I-4 Cyl. EVA = 4.7L V8 MPI	DDC = TRANSMISSION - 5-SPEED HD MANUAL DG4 = TRANSMISSION-MULTI-SPEED AUTO, 45RFE DGK = TRANSMISSION - 4-SPD. AUTOMATIC,42RE DGT = TRANSMISSION - 4-SPD. AUTOMATIC,46RE DGO = AUTO. TRANS.

2/4 Clutch Retainer [45RFE] [DG4]
Figure 45RFE-440

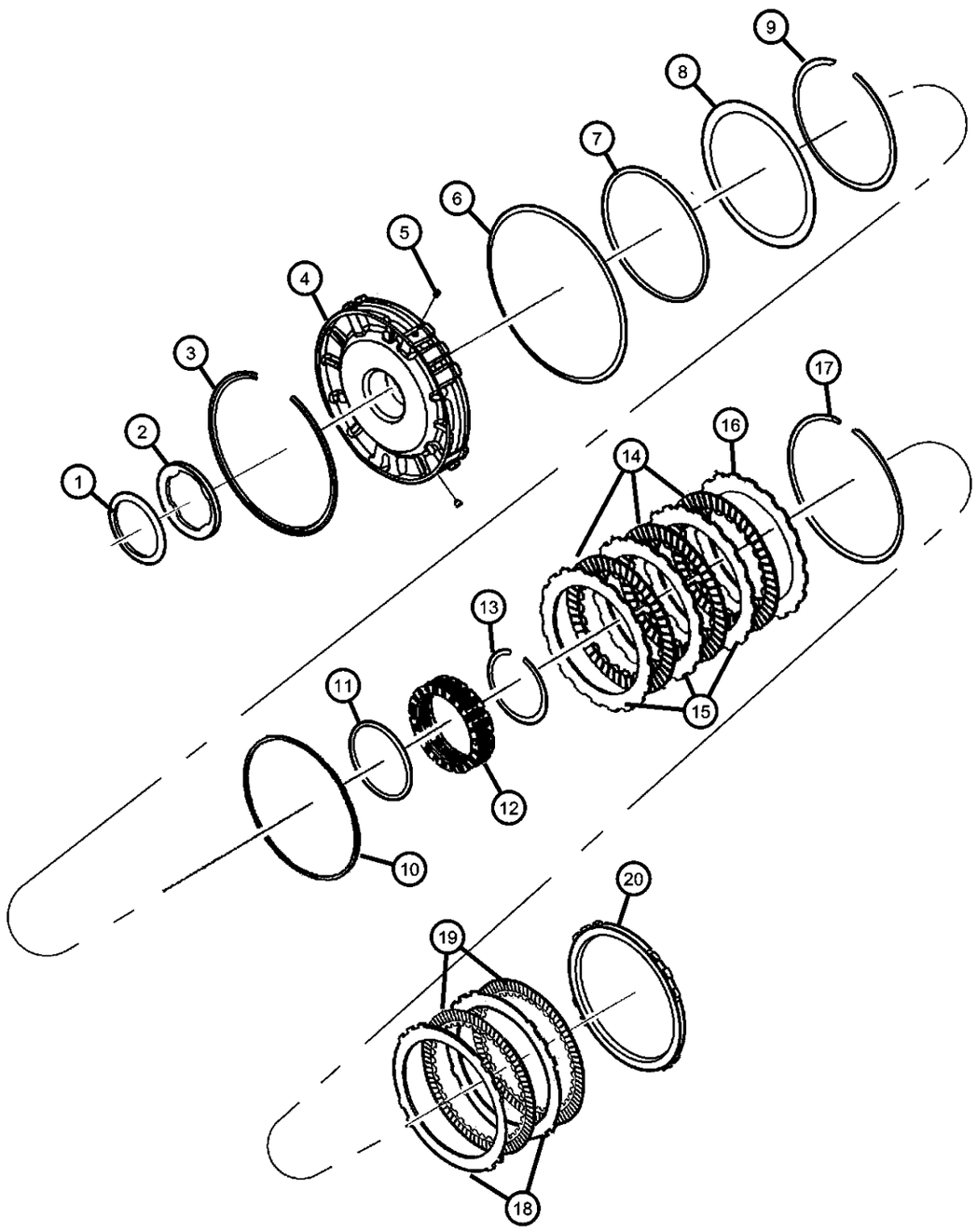

ITEM	PART NUMBER	QTY	LINE	SERIES	BODY	ENGINE	TRANS	TRIM	DESCRIPTION
NOTES:									
Sales Codes:									
EVA = 4.7L Power Tech Engine.									
1									THRUST BEARING, Needle Roller
	04799936AB	1	5				DG4		
		1	1				DG4		
2		1							PLATE, Clutch Hub Thrust, PKG 05013093AB, (NOT SERVICED)
3									SNAP RING, Transmission
	04799680	1	5				DG4		
		1	1				DG4		
4									RETAINER, Transmission 2nd and 4th Clutch Piston
	04799498	1	5				DG4		
		1	1				DG4		
5									BLEED ORIFICE, Transmission
	04799086	2	5				DG4		
		2	1				DG4		
6									SNAP RING, Transmission
	04799174	1	5				DG4		
		1	1				DG4		
7		1							RING, PKG 05013093AB, (NOT SERVICED)
8									SPRING, 2nd And 4th Clutch Piston
	04799521	1	5				DG4		
		1	1				DG4		
9									SNAP RING, Transmission
	04799522AB	1	5				DG4		
		1	1				DG4		
10		1							RING, PKG 05013093AB, (NOT SERVICED)
11		1							RING, PKG 05013093AB, (NOT SERVICED)
12									SPRING, 2nd And 4th Clutch Piston
	04799527	1	5				DG4		

DAKOTA (AN)

SERIES	LINE	BODY	ENGINE	TRANSMISSION
L = Quad Cab L = Regular Cab L = Club Cab	1 = Dakota 2WD 5 = Dakota 4WD	31 = CLUB CAB 2-DR 6.5 FT BOX 61 = REG CAB 6.5 FT BOX 84 = CREW CAB 4-DR W.B.1	EPO = 2.5L 4 Cyl. EHO = 3.9L 6 Cyl. EMO = 5.9L 8 Cyl. EVO = 4.7L Magnum EHC = 3.9L SMPI V6 EML = 5.9L V8 MPI Engine EPE = 2.5L POWER TECH I-4 Cyl. EVA = 4.7L V8 MPI	DDC = TRANSMISSION - 5-SPEED HD MANUAL DG4 = TRANSMISSION-MULTI-SPEED AUTO, 45RFE DGK = TRANSMISSION - 4-SPD. AUTOMATIC,42RE DGT = TRANSMISSION - 4-SPD. AUTOMATIC,46RE DGO = AUTO. TRANS.

2/4 Clutch Retainer [45RFE] [DG4]
Figure 45RFE-440

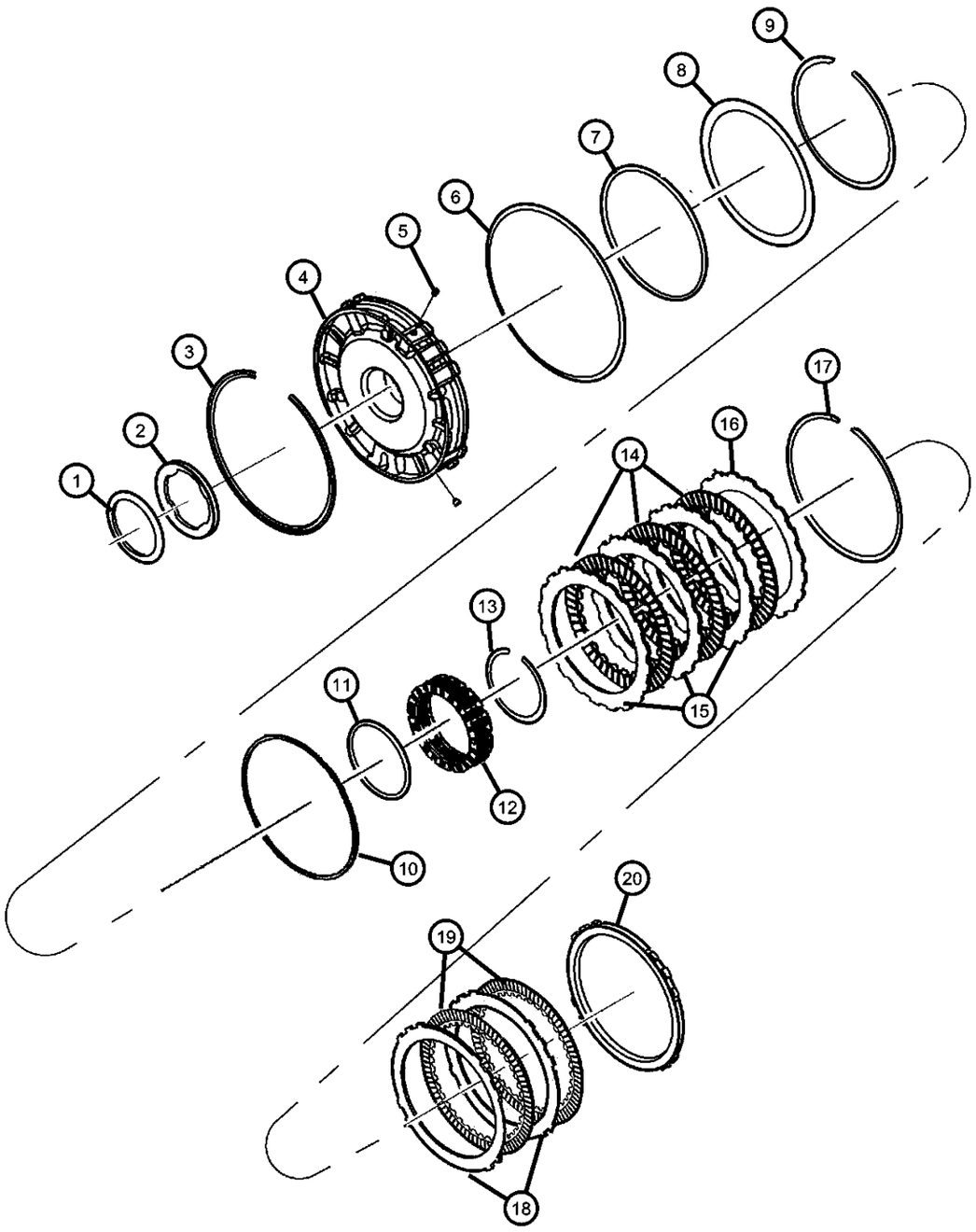

ITEM	PART NUMBER	QTY	LINE	SERIES	BODY	ENGINE	TRANS	TRIM	DESCRIPTION
		1	1				DG4		
13									SNAP RING, Transmission
	04799528AB	1	5				DG4		
		1	1				DG4		
14		1							DISC, Clutch, PKG 05013087AA, (NOT SERVICED)
15		1							PLATE, Clutch Separator, PKG 05013087AA, (NOT SERVICED)
16									PLATE, Transmission Clutch Reaction
	04799533	1	5				DG4		
		1	1				DG4		
17		1							SNAP RING, Transmission, PKG 05013087AA, (NOT SERVICED)
18		1							PLATE, PKG 05013087AA, (NOT SERVICED)
19		1							DISC, Clutch, PKG 05013087AA, (NOT SERVICED)
20									PLATE, Transmission Clutch Reaction
	04799688AB	1	5				DG4		
		1	1				DG4		

DAKOTA (AN)

SERIES	LINE	BODY	ENGINE	TRANSMISSION
L = Quad Cab	1 = Dakota 2WD	31 = CLUB CAB 2-DR 6.5 FT BOX	EPO = 2.5L 4 Cyl.	DDC = TRANSMISSION - 5-SPEED HD MANUAL
L = Regular Cab	5 = Dakota 4WD	61 = REG CAB 6.5 FT BOX	EHO = 3.9L 6 Cyl.	DG4 = TRANSMISSION-MULTI-SPEED AUTO, 45RFE
L = Club Cab		84 = CREW CAB 4-DR W.B.1	EMO = 5.9L 8 Cyl.	DGK = TRANSMISSION - 4-SPD. AUTOMATIC,42RE
			EVO = 4.7L Magnum	DGT = TRANSMISSION - 4-SPD. AUTOMATIC,46RE
			EHC = 3.9L SMPI V6	DGO = AUTO. TRANS.
			EML = 5.9L V8 MPI Engine	
			EPE = 2.5L POWER TECH I-4 Cyl.	
			EVA = 4.7L V8 MPI	

AR = use ase required - = Non illustrrated part

Input / Reverse Planetary [45RFE] [DG4]
Figure 45RFE-450

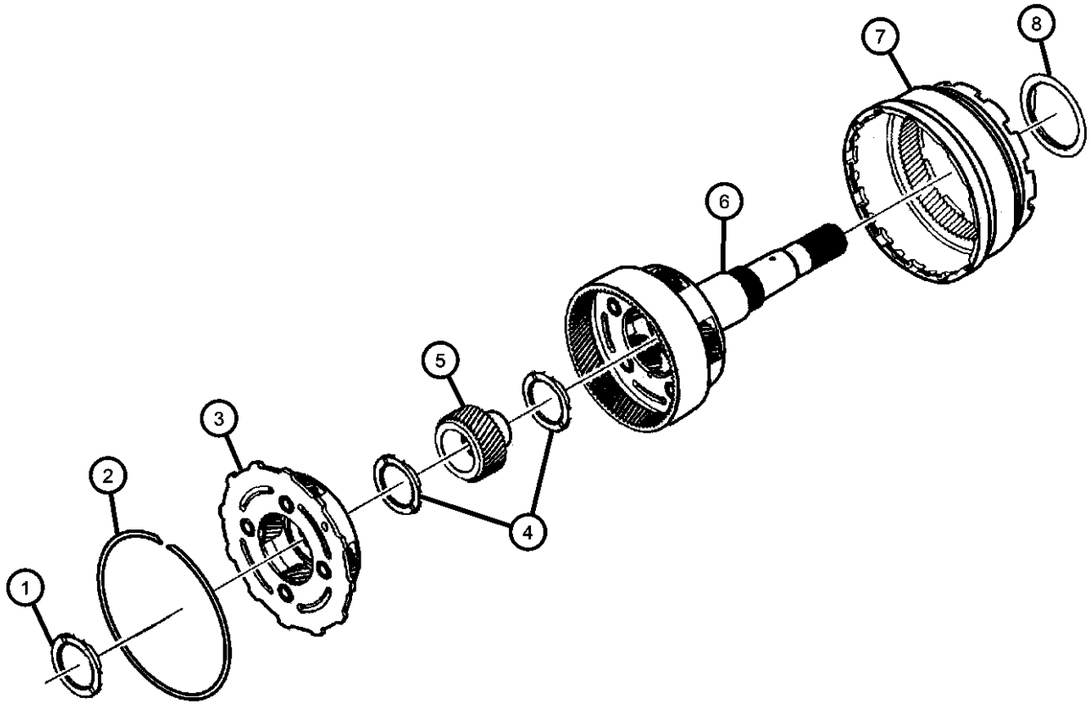

ITEM	PART NUMBER	QTY	LINE	SERIES	BODY	ENGINE	TRANS	TRIM	DESCRIPTION
NOTES:									
Sales Codes:									
EVA = 4.7L Power Tech Engine.									
1									THRUST BEARING, Needle Roller
	04799469	1	5				DG4		
		1	1				DG4		
2									SNAP RING
	04799247	1	5				DG4		
		1	1				DG4		
3									REVERSE CARRIER KIT
	05134382AA	1	1				DG4		
		1	5				DG4		
4									THRUST BEARING, Needle Roller
	04799469	1	5				DG4		Thrust Bearing #10 & #11
		1	1				DG4		Thrust Bearing #10 & #11
5									GEAR, Input Sun
	04799586	1	5				DG4		
		1	1				DG4		
6									INPUT CARRIER KIT
	05135165AA	1	1				DG4		
		1	5				DG4		
7									GEAR, Annulus
	04799501	1	5				DG4		
		1	1				DG4		
8									THRUST BEARING, Needle Roller
	04799459	1	5				DG4		
		1	1				DG4		

DAKOTA (AN)

SERIES	LINE	BODY	ENGINE	TRANSMISSION
L = Quad Cab L = Regular Cab L = Club Cab	1 = Dakota 2WD 5 = Dakota 4WD	31 = CLUB CAB 2-DR 6.5 FT BOX 61 = REG CAB 6.5 FT BOX 84 = CREW CAB 4-DR W.B.1	EPO = 2.5L 4 Cyl. EHO = 3.9L 6 Cyl. EMO = 5.9L 8 Cyl. EVO = 4.7L Magnum EHC = 3.9L SMPI V6 EML = 5.9L V8 MPI Engine EPE = 2.5L POWER TECH I-4 Cyl. EVA = 4.7L V8 MPI	DDC = TRANSMISSION - 5-SPEED HD MANUAL DG4 = TRANSMISSION-MULTI-SPEED AUTO, 45RFE DGK = TRANSMISSION - 4-SPD. AUTOMATIC,42RE DGT = TRANSMISSION - 4-SPD. AUTOMATIC,46RE DGO = AUTO. TRANS.

Reaction Annulus / Sun Gear [45RFE] [DG4]
Figure 45RFE-460

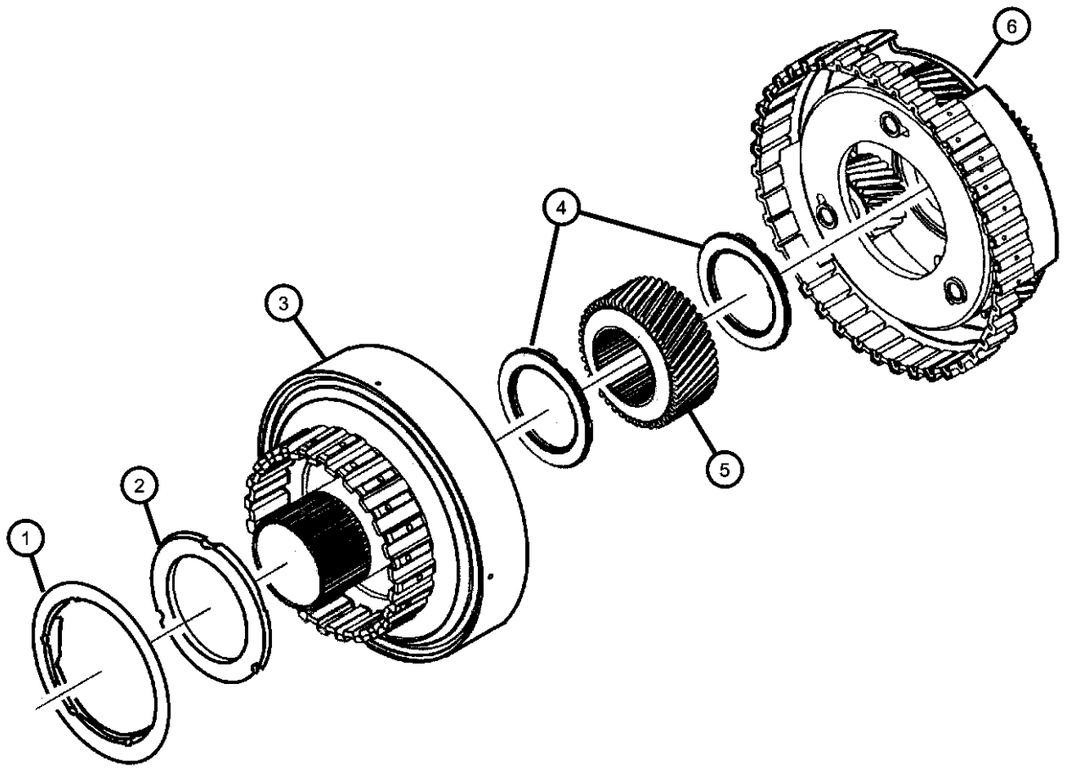

ITEM	PART NUMBER	QTY	LINE	SERIES	BODY	ENGINE	TRANS	TRIM	DESCRIPTION
NOTES:									
Sales Codes:									
EVA = 4.7L Power Tech Engine.									
1									THRUST BEARING, Needle Roller
	04799459	1	5				DG4		
		1	1				DG4		
2		1							THRUST WASHER, Planetary Carrier, PKG 05013092AA, (NOT SERVICED)
3									GEAR, Annulus
	04799604	1	5				DG4		
		1	1				DG4		
4									THRUST BEARING, Needle Roller
	04799469	1	5				DG4		
		1	1				DG4		
5									GEAR, Reaction Sun
	04799602	1	5				DG4		
		1	1				DG4		
6									CARRIER, Reaction Complete
	04799619	1	5				DG4		
		1	1				DG4		

DAKOTA (AN)

SERIES	LINE	BODY	ENGINE	TRANSMISSION
L = Quad Cab	1 = Dakota 2WD	31 = CLUB CAB 2-DR 6.5 FT BOX	EPO = 2.5L 4 Cyl.	DDC = TRANSMISSION - 5-SPEED HD MANUAL
L = Regular Cab	5 = Dakota 4WD	61 = REG CAB 6.5 FT BOX	EHO = 3.9L 6 Cyl.	DG4 = TRANSMISSION-MULTI-SPEED AUTO, 45RFE
L = Club Cab		84 = CREW CAB 4-DR W.B.1	EMO = 5.9L 8 Cyl.	DGK = TRANSMISSION - 4-SPD. AUTOMATIC,42RE
			EVO = 4.7L Magnum	DGT = TRANSMISSION - 4-SPD. AUTOMATIC,46RE
			EHC = 3.9L SMPI V6	DGO = AUTO. TRANS.
			EML = 5.9L V8 MPI Engine	
			EPE = 2.5L POWER TECH I-4 Cyl.	
			EVA = 4.7L V8 MPI	

Low / Reverse Clutch
Figure 45RFE-470

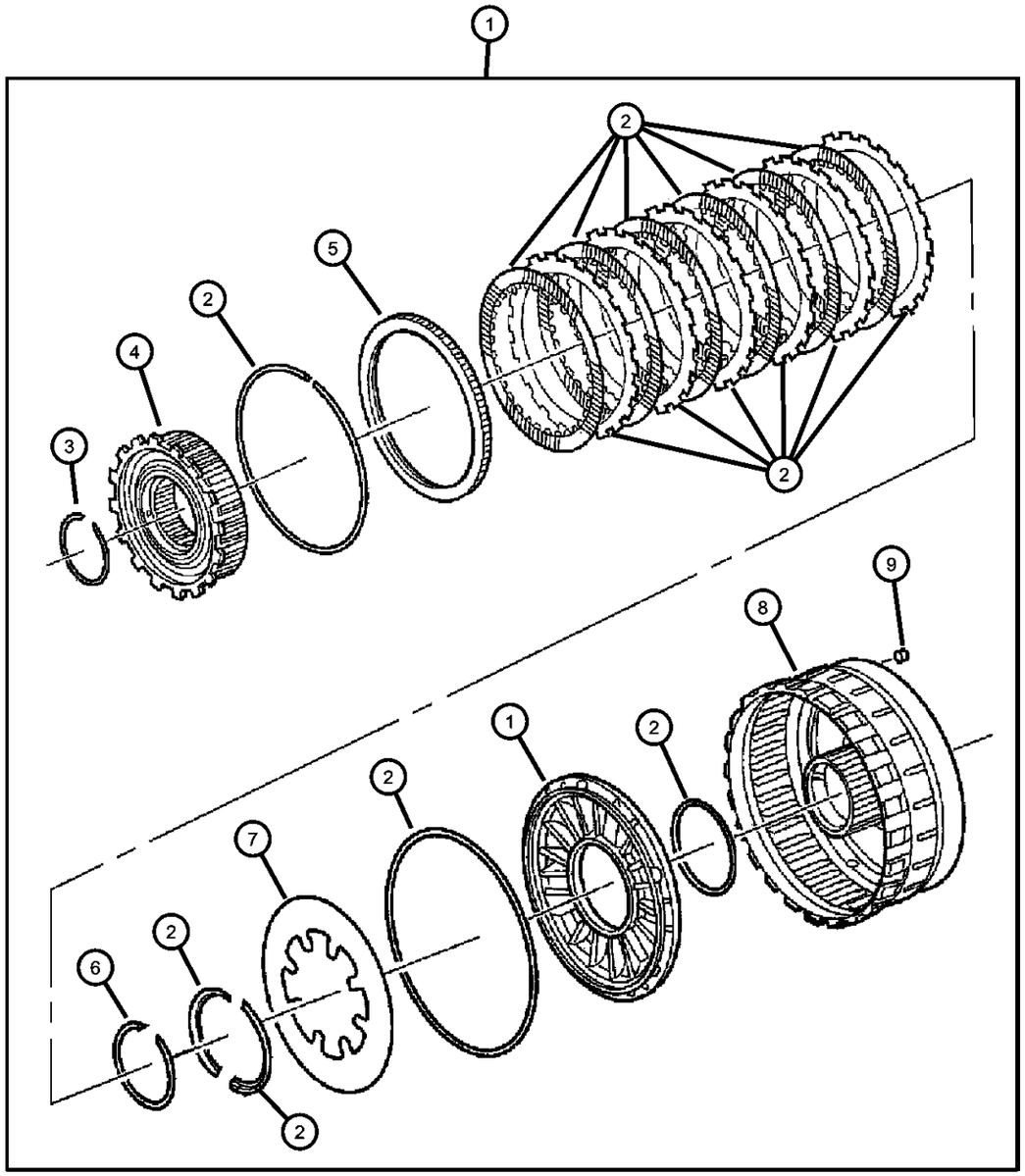

ITEM	PART NUMBER	QTY	LINE	SERIES	BODY	ENGINE	TRANS	TRIM	DESCRIPTION
1									CLUTCH, L/R Clutch
	04799457	1	5				DG4		
		1	1				DG4		
2									CLUTCH PACKAGE, Automatic Transmission, Low/Reverse
	05013091AA	1	5				DG4		
		1	1				DG4		
3									SNAP RING
	04799863AA	1	5				DG4		
		1	1				DG4		
4									CLUTCH, Overrunning
	04799465	1	5				DG4		
		1	1				DG4		
5									PLATE, Transmission Clutch Reaction
	04799667	1	5				DG4		
		1	1				DG4		
6									SNAP RING
	04799863AA	1	5				DG4		
		1	1				DG4		
7									CLUTCH PACKAGE, Automatic Transmission, Low/Reverse
	05179008AA	1	1				DG4		
		1	5				DG4		
8									RETAINER, Clutch
	04799635	1	5				DG4		
		1	1				DG4		
9									BLEED ORIFICE, Transmission
	04799086	1	5				DG4		
		1	1				DG4		

DAKOTA (AN)

SERIES	LINE	BODY	ENGINE	TRANSMISSION
L = Quad Cab L = Regular Cab L = Club Cab	1 = Dakota 2WD 5 = Dakota 4WD	31 = CLUB CAB 2-DR 6.5 FT BOX 61 = REG CAB 6.5 FT BOX 84 = CREW CAB 4-DR W.B.1	EPO = 2.5L 4 Cyl. EHO = 3.9L 6 Cyl. EMO = 5.9L 8 Cyl. EVO = 4.7L Magnum EHC = 3.9L SMPI V6 EML = 5.9L V8 MPI Engine EPE = 2.5L POWER TECH I-4 Cyl. EVA = 4.7L V8 MPI	DDC = TRANSMISSION - 5-SPEED HD MANUAL DG4 = TRANSMISSION-MULTI-SPEED AUTO, 45RFE DGK = TRANSMISSION - 4-SPD. AUTOMATIC,42RE DGT = TRANSMISSION - 4-SPD. AUTOMATIC,46RE DGO = AUTO. TRANS.

Valve Body [45RFE] [DG4]
Figure 45RFE-710

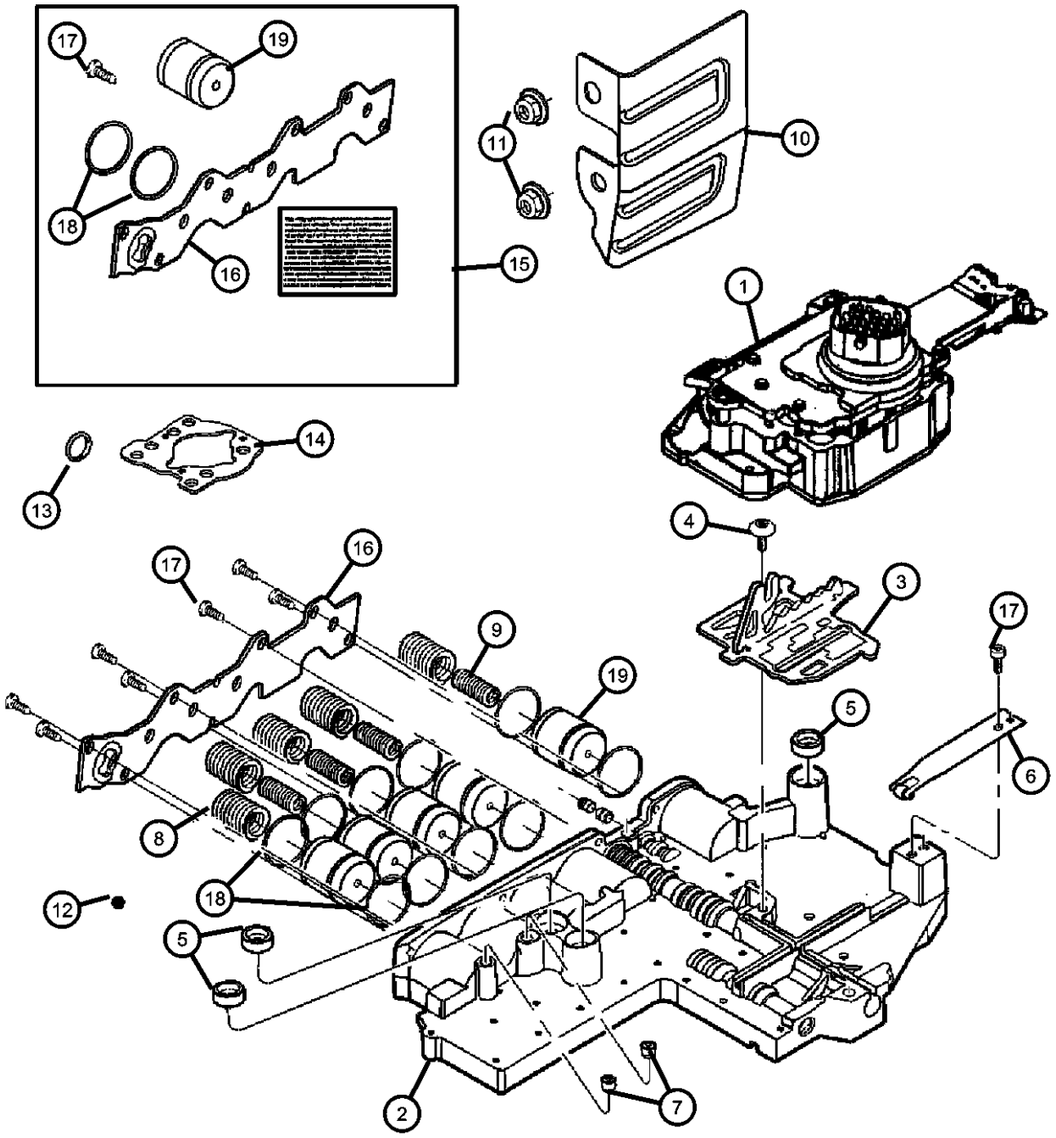

ITEM	PART NUMBER	QTY	LINE	SERIES	BODY	ENGINE	TRANS	TRIM	DESCRIPTION
NOTES:									
Sales Codes:									
EVA = 4.7L Power Tech Engine.									
1									SOLENOID, Transmission
	04799934AB	1	5				DG4		
		1	1				DG4		
2									VALVE BODY, Transfer Plate and Valve
	04799588	1	1				DG4		
		1	5				DG4		
3									PLATE, Manual Valve Cam
	04799654AB	1	5				DG4		
		1	1				DG4		
4									SCREW, Shoulder/Truss, M5x.8x12.5
	06501710	1	5				DG4		
		1	1				DG4		
5									SEAL, Clutch Feed
	04799778	3	5				DG4		
		3	1				DG4		
6									DETENT, Valve Body
	04799593	1	5				DG4		
		1	1				DG4		
7									BLEED ORIFICE, Transmission
	04799086	2	5				DG4		
		2	1				DG4		
8									SPRING, Accumulator
	04471880	5	5				DG4		
		5	1				DG4		
9									SPRING, Accumulator
	04567575	4	5				DG4		
		4	1				DG4		
10	56045439AB	1				EV0	DG0		SHIELD, Heat
11	06502337	2							NUT, M10x1.5

DAKOTA (AN)

SERIES	LINE	BODY	ENGINE	TRANSMISSION
L = Quad Cab	1 = Dakota 2WD	31 = CLUB CAB 2-DR 6.5 FT BOX	EPO = 2.5L 4 Cyl.	DDC = TRANSMISSION - 5-SPEED HD MANUAL
L = Regular Cab	5 = Dakota 4WD	61 = REG CAB 6.5 FT BOX	EHO = 3.9L 6 Cyl.	DG4 = TRANSMISSION-MULTI-SPEED AUTO, 45RFE
L = Club Cab		84 = CREW CAB 4-DR W.B.1	EMO = 5.9L 8 Cyl.	DGK = TRANSMISSION - 4-SPD. AUTOMATIC,42RE
			EVO = 4.7L Magnum	DGT = TRANSMISSION - 4-SPD. AUTOMATIC,46RE
			EHC = 3.9L SMPI V6	DGO = AUTO. TRANS.
			EML = 5.9L V8 MPI Engine	
			EPE = 2.5L POWER TECH I-4 Cyl.	
			EVA = 4.7L V8 MPI	

Valve Body [45RFE] [DG4]
Figure 45RFE-710

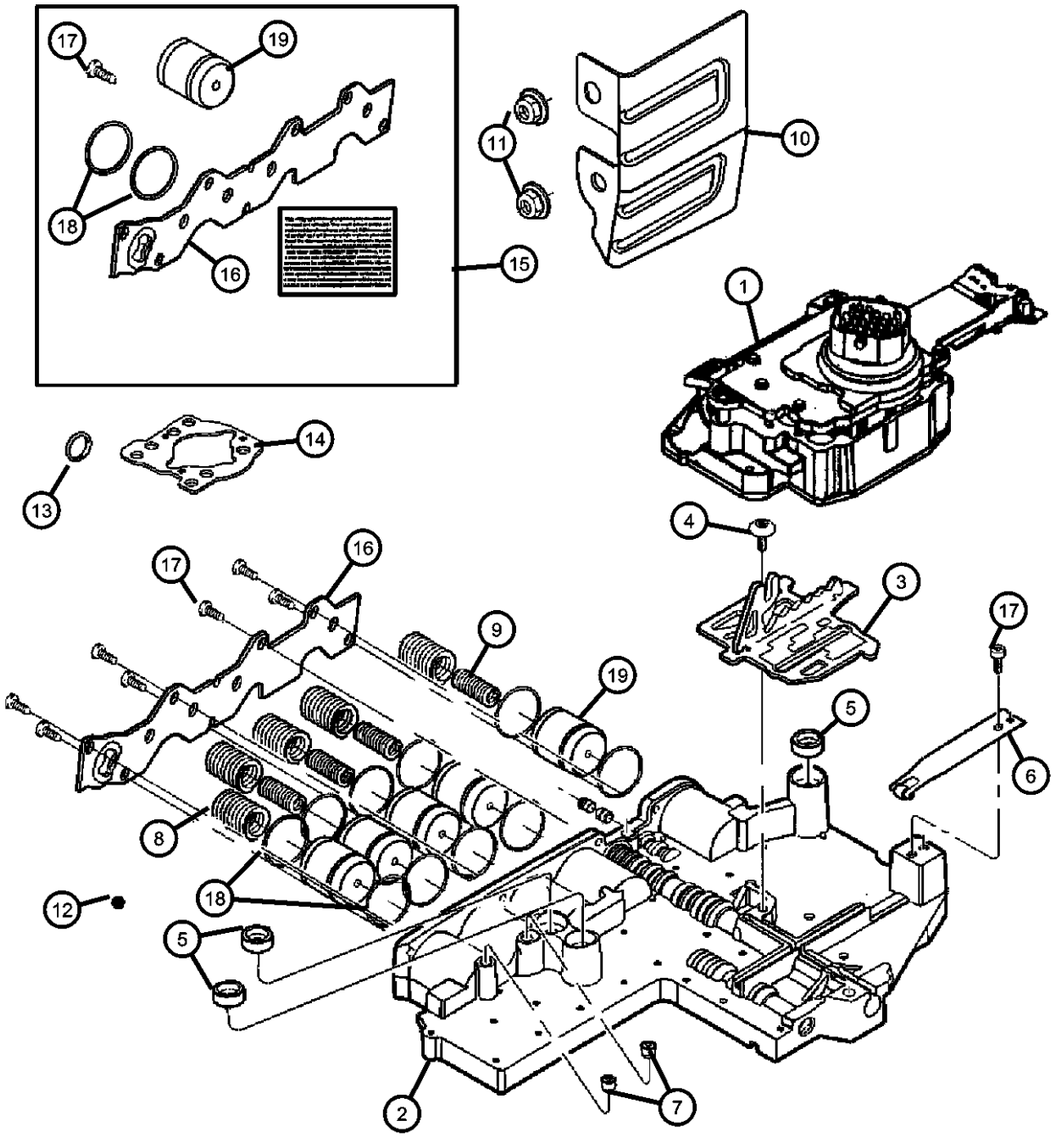

ITEM	PART NUMBER	QTY	LINE	SERIES	BODY	ENGINE	TRANS	TRIM	DESCRIPTION
12									BALL, Check
	04446602	7	5				DG4		
		7	1				DG4		
13									O RING, Control Valve
	06505335AA	1	5				DG4		
		1	1				DG4		
14									SEAL, Insulator
	04799986AA	1	5				DG4		
		1	1				DG4		
15									ACCUMULATOR KIT, Accumulator Cover
	05174633AA	1	1				DG4		
		1	5				DG4		
16									COVER, Accumulator
	04799598AB	1	1				DG4		
		1	5				DG4		
17									SCREW, Pan Head, M5 x 0.8 x 12.60
	06503232	7	1				DG4		
		7	5				DG4		
18									SEAL, Accumulator
	04446544	10	5				DG4		
		10	1				DG4		
19									PISTON, Accumulator
	04446620	5	5				DG4		
		5	1				DG4		

DAKOTA (AN)

SERIES	LINE	BODY	ENGINE	TRANSMISSION
L = Quad Cab L = Regular Cab L = Club Cab	1 = Dakota 2WD 5 = Dakota 4WD	31 = CLUB CAB 2-DR 6.5 FT BOX 61 = REG CAB 6.5 FT BOX 84 = CREW CAB 4-DR W.B.1	EPO = 2.5L 4 Cyl. EHO = 3.9L 6 Cyl. EMO = 5.9L 8 Cyl. EVO = 4.7L Magnum EHC = 3.9L SMPI V6 EML = 5.9L V8 MPI Engine EPE = 2.5L POWER TECH I-4 Cyl. EVA = 4.7L V8 MPI	DDC = TRANSMISSION - 5-SPEED HD MANUAL DG4 = TRANSMISSION-MULTI-SPEED AUTO, 45RFE DGK = TRANSMISSION - 4-SPD. AUTOMATIC,42RE DGT = TRANSMISSION - 4-SPD. AUTOMATIC,46RE DGO = AUTO. TRANS.

Parking Sprag [45RFE] [DG4]
Figure 45RFE-720

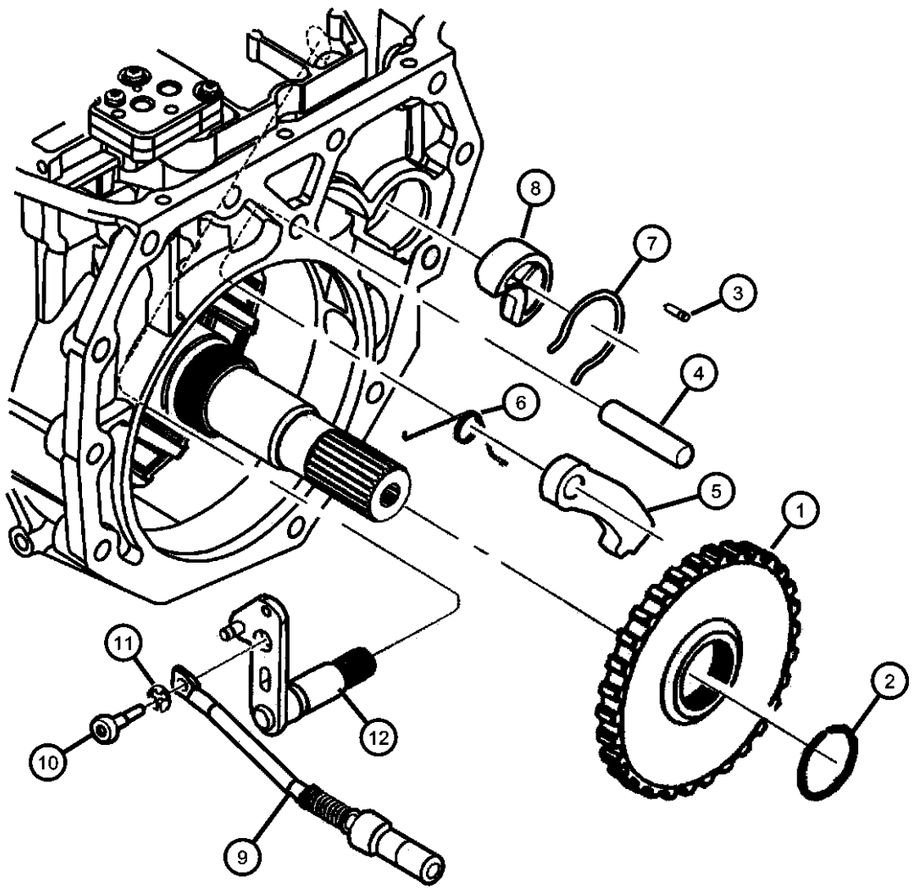

ITEM	PART NUMBER	QTY	LINE	SERIES	BODY	ENGINE	TRANS	TRIM	DESCRIPTION
NOTES:									
Sales Codes:									
EVA = 4.7L Power Tech Engine.									
1									SPRAG, Transmission Parking
	04799493	1	5				DG4		
		1	1				DG4		
2									SNAP RING, Transmission
	04799704	1	5				DG4		
		1	1				DG4		
3									PIN
	00456636	1	5				DG4		
		1	1				DG4		
4									SHAFT, Parking Pawl
	04799450	1	5				DG4		
		1	1				DG4		
5									PAWL, Parking Sprag
	04799744AC	1	5				DG4		
		1	1				DG4		
6									SPRING, Torsion
	04799451	1	5				DG4		
		1	1				DG4		
7									SNAP RING
	04799313	1	5				DG4		
		1	1				DG4		
8									GUIDE, Parking Sprag Pawl
	04799774	1	5				DG4		
		1	1				DG4		
9									ROD, Parking Sprag
	04799611	1	5				DG4		
		1	1				DG4		
10									SCREW, M6x1x30
	06504548	1	5				DG4		
		1	1				DG4		

DAKOTA (AN)

SERIES	LINE	BODY	ENGINE	TRANSMISSION
L = Quad Cab	1 = Dakota 2WD	31 = CLUB CAB 2-DR 6.5 FT BOX	EPO = 2.5L 4 Cyl.	DDC = TRANSMISSION - 5-SPEED HD MANUAL
L = Regular Cab	5 = Dakota 4WD	61 = REG CAB 6.5 FT BOX	EHO = 3.9L 6 Cyl.	DG4 = TRANSMISSION-MULTI-SPEED AUTO, 45RFE
L = Club Cab		84 = CREW CAB 4-DR W.B.1	EMO = 5.9L 8 Cyl.	DGK = TRANSMISSION - 4-SPD. AUTOMATIC,42RE
			EVO = 4.7L Magnum	DGT = TRANSMISSION - 4-SPD. AUTOMATIC,46RE
			EHC = 3.9L SMPI V6	DGO = AUTO. TRANS.
			EML = 5.9L V8 MPI Engine	
			EPE = 2.5L POWER TECH I-4 Cyl.	
			EVA = 4.7L V8 MPI	

Parking Sprag [45RFE] [DG4]
Figure 45RFE-720

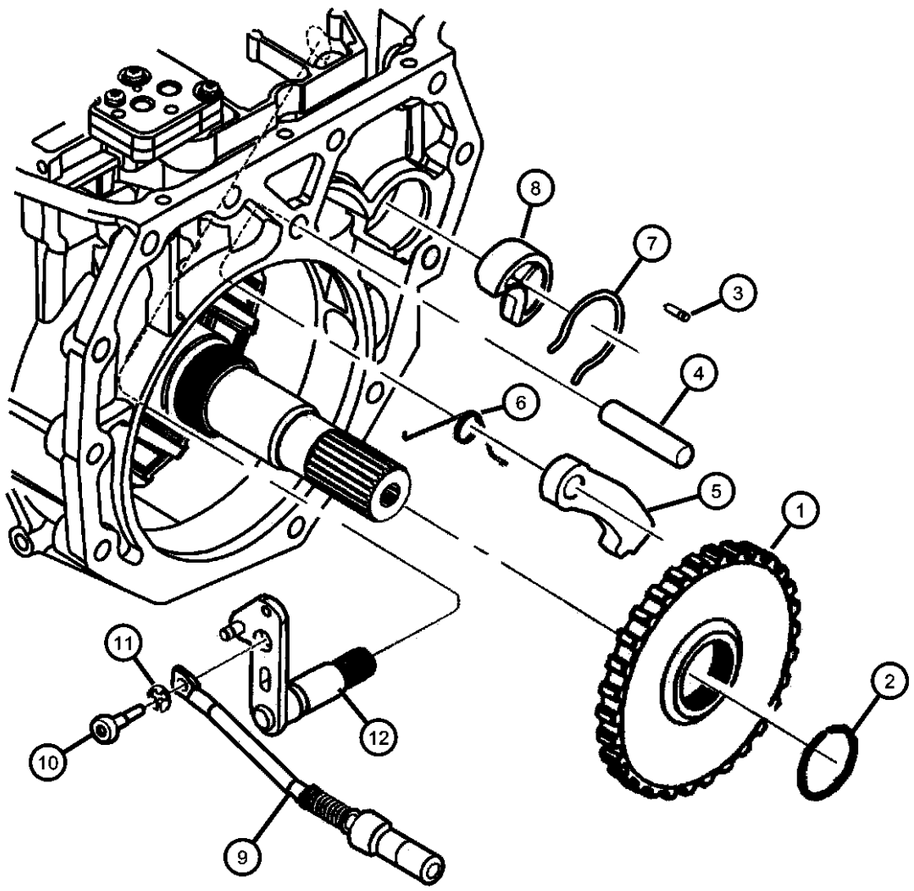

ITEM	PART NUMBER	QTY	LINE	SERIES	BODY	ENGINE	TRANS	TRIM	DESCRIPTION
11									SNAP RING, Rod
	06035256	1	5				DG4		
		1	1				DG4		
12									LEVER, Shift Shaft
	04799453	1	5				DG4		
		1	1				DG4		

DAKOTA (AN)

SERIES	LINE	BODY	ENGINE	TRANSMISSION
L = Quad Cab	1 = Dakota 2WD	31 = CLUB CAB 2-DR 6.5 FT BOX	EPO = 2.5L 4 Cyl.	DDC = TRANSMISSION - 5-SPEED HD MANUAL
L = Regular Cab	5 = Dakota 4WD	61 = REG CAB 6.5 FT BOX	EHO = 3.9L 6 Cyl.	DG4 = TRANSMISSION-MULTI-SPEED AUTO, 45RFE
L = Club Cab		84 = CREW CAB 4-DR W.B.1	EMO = 5.9L 8 Cyl.	DGK = TRANSMISSION - 4-SPD. AUTOMATIC,42RE
			EVO = 4.7L Magnum	DGT = TRANSMISSION - 4-SPD. AUTOMATIC,46RE
			EHC = 3.9L SMPI V6	DGO = AUTO. TRANS.
			EML = 5.9L V8 MPI Engine	
			EPE = 2.5L POWER TECH I-4 Cyl.	
			EVA = 4.7L V8 MPI	

Gearshift Controls [45RFE] [DG4]
Figure 45RFE-1210

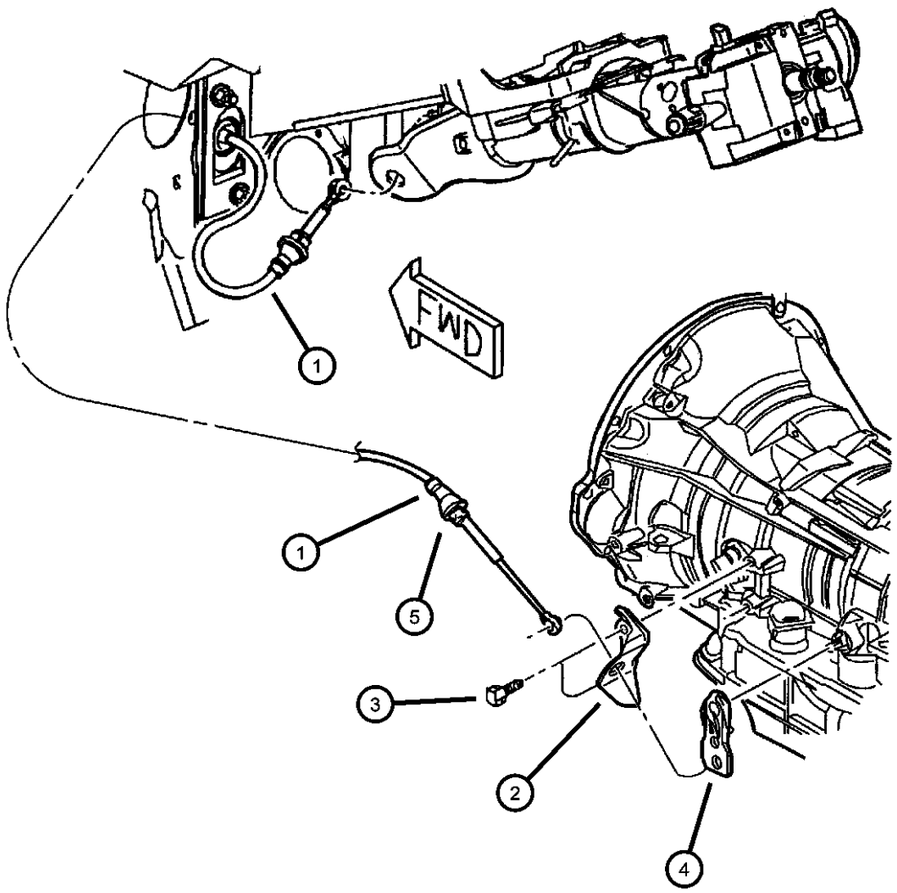

ITEM	PART NUMBER	QTY	LINE	SERIES	BODY	ENGINE	TRANS	TRIM	DESCRIPTION
NOTES: Sales Codes: DSB= VARI- Lok EVA = 4.7L Power Tech Engine.									
1	52107727	1					DG4		CABLE, Shift
2	52104176AB	1					DG4		BRACKET, Shift Cable
3	06101758	2				EV0	DG4		SCREW, Hex Head, M8x1.25x20
4	52107726AB	1					DG4		LEVER, Manual Control
5	56021384	1	1				DG4		CLIP, Wiring
-6	52107866AA	1	5				DG4		RETAINER, Transmission Control Shift
-7	34201888	1	5				DG4		SCREW, Hex HeadShift Cable, Retainer

DAKOTA (AN)

SERIES	LINE	BODY	ENGINE	TRANSMISSION
L = Quad Cab L = Regular Cab L = Club Cab	1 = Dakota 2WD 5 = Dakota 4WD	31 = CLUB CAB 2-DR 6.5 FT BOX 61 = REG CAB 6.5 FT BOX 84 = CREW CAB 4-DR W.B.1	EPO = 2.5L 4 Cyl. EHO = 3.9L 6 Cyl. EMO = 5.9L 8 Cyl. EVO = 4.7L Magnum EHC = 3.9L SMPI V6 EML = 5.9L V8 MPI Engine EPE = 2.5L POWER TECH I-4 Cyl. EVA = 4.7L V8 MPI	DDC = TRANSMISSION - 5-SPEED HD MANUAL DG4 = TRANSMISSION-MULTI-SPEED AUTO, 45RFE DGK = TRANSMISSION - 4-SPD. AUTOMATIC,42RE DGT = TRANSMISSION - 4-SPD. AUTOMATIC,46RE DGO = AUTO. TRANS.

LR CLUTCH PACKAGE 05013091aa

	D-ring, external (L/R piston outer)
	D-ring, internal (L/R piston inner)
(6)	Plate, clutch separator (1.74mm thk)
(6)	Disc assy, clutch (L/R)
	Snap ring, flat (1.5/1.6 thk)
	Snap ring, flat (2.03/2.13 thk)
	Snap ring, flat (2.54/2.68 thk)
(2)	Retainer, c-clip

ITEM	PART NUMBER	QTY	LINE	SERIES	BODY	ENGINE	TRANS	TRIM	DESCRIPTION
NOTES:									
Sales Codes:									
EVA = 4.7L Power Tech Engine.									
1									CLUTCH PACKAGE, Automatic Transmission, Low/Reverse
	05013091AA	1	5				DG4		
		1	1				DG4		

DAKOTA (AN)

SERIES	LINE	BODY	ENGINE	TRANSMISSION
L = Quad Cab	1 = Dakota 2WD	31 = CLUB CAB 2-DR 6.5 FT BOX	EPO = 2.5L 4 Cyl.	DDC = TRANSMISSION - 5-SPEED HD MANUAL
L = Regular Cab	5 = Dakota 4WD	61 = REG CAB 6.5 FT BOX	EHO = 3.9L 6 Cyl.	DG4 = TRANSMISSION-MULTI-SPEED AUTO, 45RFE
L = Club Cab		84 = CREW CAB 4-DR W.B.1	EMO = 5.9L 8 Cyl.	DGK = TRANSMISSION - 4-SPD. AUTOMATIC,42RE
			EVO = 4.7L Magnum	DGT = TRANSMISSION - 4-SPD. AUTOMATIC,46RE
			EHC = 3.9L SMPI V6	DGO = AUTO. TRANS.
			EML = 5.9L V8 MPI Engine	
			EPE = 2.5L POWER TECH I-4 Cyl.	
			EVA = 4.7L V8 MPI	

SELECTIVE THRUST PLATES **05013093aa**

INPUT CLUTCH THRUST PLATE PKG (1)

	Thrust plate, input clutc 1.52 / 1.61
	Thrust plate, input clutc 1.66 / 1.75
	Thrust plate, input clutc 1.80 / 1.89
	Thrust plate, input clutc 1.94 / 2.03
	Thrust plate, input clutc 2.08 / 2.17
	Thrust plate, input clutc 2.22 / 2.31
	Thrust plate, input clutc 2.36 / 2.45
	Thrust plate, input clutc 2.50 / 2.59
	Thrust plate, input clutc 2.64 / 2.73
	Thrust plate, input clutc 2.78 / 2.87
	Thrust plate, input clutc 2.92 / 3.01
	Thrust plate, input clutc 3.06 / 3.15
	Thrust plate, input clutc 3.20 / 3.29
	Thrust plate, input clutc 3.34 / 3.43
	Thrust plate, input clutc 3.62 / 3.71

ITEM	PART NUMBER	QTY	LINE	SERIES	BODY	ENGINE	TRANS	TRIM	DESCRIPTION
NOTES:									
Sales Codes:									
EVA = 4.7L Power Tech Engine.									
1									PLATE PACKAGE, Input Clutch Thrust
	05013093AA	1	5				DG4		
		1	1				DG4		

DAKOTA (AN)

SERIES	LINE	BODY	ENGINE	TRANSMISSION
L = Quad Cab L = Regular Cab L = Club Cab	1 = Dakota 2WD 5 = Dakota 4WD	31 = CLUB CAB 2-DR 6.5 FT BOX 61 = REG CAB 6.5 FT BOX 84 = CREW CAB 4-DR W.B.1	EPO = 2.5L 4 Cyl. EHO = 3.9L 6 Cyl. EMO = 5.9L 8 Cyl. EVO = 4.7L Magnum EHC = 3.9L SMPI V6 EML = 5.9L V8 MPI Engine EPE = 2.5L POWER TECH I-4 Cyl. EVA = 4.7L V8 MPI	DDC = TRANSMISSION - 5-SPEED HD MANUAL DG4 = TRANSMISSION-MULTI-SPEED AUTO, 45RFE DGK = TRANSMISSION - 4-SPD. AUTOMATIC,42RE DGT = TRANSMISSION - 4-SPD. AUTOMATIC,46RE DGO = AUTO. TRANS.

Figure 45RFE-1330

O/H seal/gasket package		05014221ac
	2&4 clutch package	
	Input clutch package	
	L/R clutch package	
	Sump filter & seal package	
	Cooler filter	
	fill tube seal	
	Frt pmp cover o-ring/seal assy	
	Rotating shaft seal,pmp hsg	
	Adapter seal, 4x4	
	Extension seal,4x2	
	Manual lever seal	
(2)	Speed sensor seal	
	Reaction supt ring seal	
	Rev O/D clutch filter	
(10)	Accumulator ring seal	
(3)	Valve body seal	
	Check valve o-ring	
	Solenoid insulator seal	
	T/C seal	

ITEM	PART NUMBER	QTY	LINE	SERIES	BODY	ENGINE	TRANS	TRIM	DESCRIPTION
NOTES:									
Sales Codes:									
EVA = 4.7L Power Tech Engine.									
1									OVERHAUL PACKAGE, Transmission
	05014221AD	1	5				DG4		
		1	1				DG4		

DAKOTA (AN)

SERIES	LINE	BODY	ENGINE	TRANSMISSION
L = Quad Cab	1 = Dakota 2WD	31 = CLUB CAB 2-DR 6.5 FT BOX	EPO = 2.5L 4 Cyl.	DDC = TRANSMISSION - 5-SPEED HD MANUAL
L = Regular Cab	5 = Dakota 4WD	61 = REG CAB 6.5 FT BOX	EHO = 3.9L 6 Cyl.	DG4 = TRANSMISSION-MULTI-SPEED AUTO, 45RFE
L = Club Cab		84 = CREW CAB 4-DR W.B.1	EMO = 5.9L 8 Cyl.	DGK = TRANSMISSION - 4-SPD. AUTOMATIC,42RE
			EVO = 4.7L Magnum	DGT = TRANSMISSION - 4-SPD. AUTOMATIC,46RE
			EHC = 3.9L SMPI V6	DGO = AUTO. TRANS.
			EML = 5.9L V8 MPI Engine	
			EPE = 2.5L POWER TECH I-4 Cyl.	
			EVA = 4.7L V8 MPI	

INPUT CLUTCH PACKAGE 05013090aa

	O-ring, large (2.62mm x 79.84 ID,gm)
	O-ring, small (2.62mm x 70.56 ID,red)
(2)	Seal, internal lip
(2)	Ring seal, I-shaft
	O-ring, piston inner (2.62mm x 93.54 ID)
(5)	Plate, clutch separator (1.74mm thk)
(4)	Disc assy, clutch (u/d clutch)
(4)	Disc assy, clutch (o/d clutch)
(3)	PLate, clutch separator (2.21mm thk, O/D)
(2)	Disc assy, clutch (rev clutch)
	Snap ring,tapered, internal butterfly end
	Snap ring, flat (1.5/1.6 thk)
	Snap ring, flat (1.80/1.90 thk)
	Snap ring, flat (2.15/2.25 thk)
	Piston & seal, underdrive
	Piston & seal, underdrive balance

ITEM	PART NUMBER	QTY	LINE	SERIES	BODY	ENGINE	TRANS	TRIM	DESCRIPTION
NOTES:									
Sales Codes:									
EVA = 4.7L Power Tech Engine.									
1									CLUTCH PACKAGE, Automatic Transmission, Input
	05013090AA	1	5				DG4		
		1	1				DG4		

DAKOTA (AN)

SERIES	LINE	BODY	ENGINE	TRANSMISSION
L = Quad Cab	1 = Dakota 2WD	31 = CLUB CAB 2-DR 6.5 FT BOX	EPO = 2.5L 4 Cyl.	DDC = TRANSMISSION - 5-SPEED HD MANUAL
L = Regular Cab	5 = Dakota 4WD	61 = REG CAB 6.5 FT BOX	EHO = 3.9L 6 Cyl.	DG4 = TRANSMISSION-MULTI-SPEED AUTO, 45RFE
L = Club Cab		84 = CREW CAB 4-DR W.B.1	EMO = 5.9L 8 Cyl.	DGK = TRANSMISSION - 4-SPD. AUTOMATIC,42RE
			EVO = 4.7L Magnum	DGT = TRANSMISSION - 4-SPD. AUTOMATIC,46RE
			EHC = 3.9L SMPI V6	DGO = AUTO. TRANS.
			EML = 5.9L V8 MPI Engine	
			EPE = 2.5L POWER TECH I-4 Cyl.	
			EVA = 4.7L V8 MPI	

SELECTIVE THRUST PLATES

PLANETARY THRUST PLATE PKG 05013092aa

	Thrust plate, planetary	1.62 / 1.75
	Thrust plate, planetary	1.81 / 1.94
	Thrust plate, planetary	1.96 / 2.09
	Thrust plate, planetary	2.11 / 2.24
	Thrust plate, planetary	2.26 / 2.39
	Thrust plate, planetary	2.41 / 2.54
	Thrust plate, planetary	2.56 / 2.69
	Thrust plate, planetary	2.71 / 2.84
	Thrust plate, planetary	2.86 / 2.99
	Thrust plate, planetary	3.01 / 3.14
	Thrust plate, planetary	3.16 / 3.29
	Thrust plate, planetary	3.31 / 3.44
	Thrust plate, planetary	3.46 / 3.59
	Thrust plate, planetary	3.61 / 3.74
	Thrust plate, planetary	3.76 / 3.89
	Thrust plate, planetary	3.91 / 4.04
	Thrust plate, planetary	4.06 / 4.19
	Thrust plate, planetary	4.21 / 4.34
	Thrust plate, planetary	4.36 / 4.49

ITEM	PART NUMBER	QTY	LINE	SERIES	BODY	ENGINE	TRANS	TRIM	DESCRIPTION
NOTES:									
Sales Codes:									
EVA = 4.7L Power Tech Engine.									
1									PLATE PACKAGE, Planetary Thrust
	05013092AA	1	5				DG4		
		1	1				DG4		

DAKOTA (AN)

SERIES	LINE	BODY	ENGINE	TRANSMISSION
L = Quad Cab	1 = Dakota 2WD	31 = CLUB CAB 2-DR 6.5 FT BOX	EPO = 2.5L 4 Cyl.	DDC = TRANSMISSION - 5-SPEED HD MANUAL
L = Regular Cab	5 = Dakota 4WD	61 = REG CAB 6.5 FT BOX	EHO = 3.9L 6 Cyl.	DG4 = TRANSMISSION-MULTI-SPEED AUTO, 45RFE
L = Club Cab		84 = CREW CAB 4-DR W.B.1	EMO = 5.9L 8 Cyl.	DGK = TRANSMISSION - 4-SPD. AUTOMATIC,42RE
			EVO = 4.7L Magnum	DGT = TRANSMISSION - 4-SPD. AUTOMATIC,46RE
			EHC = 3.9L SMPI V6	DGO = AUTO. TRANS.
			EML = 5.9L V8 MPI Engine	
			EPE = 2.5L POWER TECH I-4 Cyl.	
			EVA = 4.7L V8 MPI	

2&4 CLUTCH PACKAGE 05013087aa

(2)	Disc assy, clutch (2nd clutch)
(2)	Plate, clutch separator
	D-ring, external (2nd outer)
	D-ring, internal (2nd inner)
	D-ring, internal (4th outer)
	D-ring, internal (4th inner)
(3)	Plate, clutch separator (4th clutch)
(3)	Disc assy, clutch (4th clutch)
	Snap ring (4th, 1.74/1.84 thk)
	Snap ring (4th, 2.15/2.25 thk)
	Snap ring (4th, 2.56/2.66 thk)

ITEM	PART NUMBER	QTY	LINE	SERIES	BODY	ENGINE	TRANS	TRIM	DESCRIPTION
NOTES:									
Sales Codes:									
EVA = 4.7L Power Tech Engine.									
1									CLUTCH PACKAGE, Automatic Transmission, 2/4
	05013087AA	1	5				DG4		
		1	1				DG4		

DAKOTA (AN)

SERIES	LINE	BODY	ENGINE	TRANSMISSION
L = Quad Cab	1 = Dakota 2WD	31 = CLUB CAB 2-DR 6.5 FT BOX	EPO = 2.5L 4 Cyl.	DDC = TRANSMISSION - 5-SPEED HD MANUAL
L = Regular Cab	5 = Dakota 4WD	61 = REG CAB 6.5 FT BOX	EHO = 3.9L 6 Cyl.	DG4 = TRANSMISSION-MULTI-SPEED AUTO, 45RFE
L = Club Cab		84 = CREW CAB 4-DR W.B.1	EMO = 5.9L 8 Cyl.	DGK = TRANSMISSION - 4-SPD. AUTOMATIC,42RE
			EVO = 4.7L Magnum	DGT = TRANSMISSION - 4-SPD. AUTOMATIC,46RE
			EHC = 3.9L SMPI V6	DGO = AUTO. TRANS.
			EML = 5.9L V8 MPI Engine	
			EPE = 2.5L POWER TECH I-4 Cyl.	
			EVA = 4.7L V8 MPI	

Group - 46RE

Automatic Transmission 4 Speed

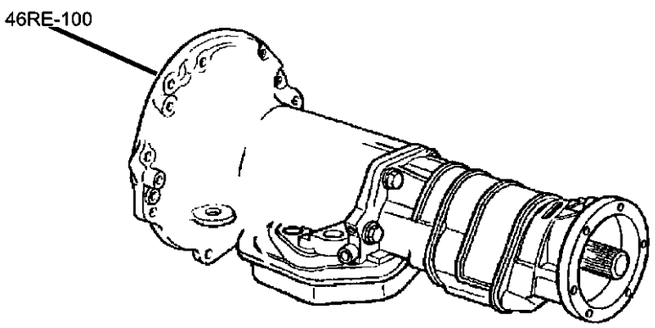

46RE-100 Transmission Assembly 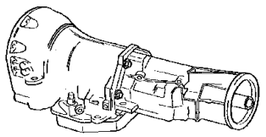	**46RE-1000** Overdrive Gear Train 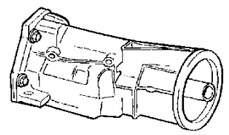	**46RE-1200** Gearshift Controls 	**46RE-200** Case and Extension 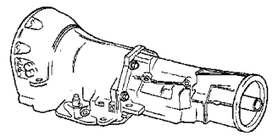
46RE-300 Oil Pump 	**46RE-400** Gear Train 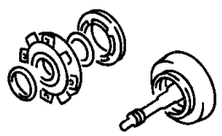	**46RE-500** Bands, Reverse and Kickdown 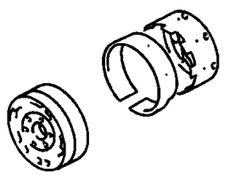	**46RE-700** Valve Body 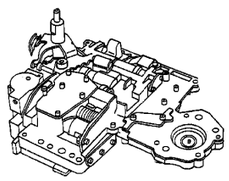

Group - 46RE Automatic Transmission 4 Speed

Illustration Title — Group-Fig. No.

Transmission Assembly
Transmission [46 RE] [DGT] ..... Fig. 46RE - 110

Case and Extension
Case and Related Parts [46 RE] [DGT] ..... Fig. 46RE - 217
Extension [46 RE] [DGT] ..... Fig. 46RE - 220

Oil Pump
Oil Pump [46 RE] [DGT] ..... Fig. 46RE - 325

Gear Train
Clutch Front and Rear [46 RE] [DGT] ..... Fig. 46RE - 415
Intermedate Shaft [46 RE] [DGT] ..... Fig. 46RE - 425
Output Shaft [46 RE] [DGT] ..... Fig. 46RE - 430

Bands, Reverse and Kickdown
Bands [46 RE] [DGT] ..... Fig. 46RE - 515

Valve Body
Valve Body [46 RE] [DGT] ..... Fig. 46RE - 710
Servo [46 RE] [DGT] ..... Fig. 46RE - 725
Parking Sprag [46 RE] [DGT] ..... Fig. 46RE - 730

Overdrive Gear Train
Clutch [46 RE] [DGT] ..... Fig. 46RE - 1010

Gearshift Controls
Gearshift Controls [46 RE] [DGT] ..... Fig. 46RE - 1220

Transmission [46 RE] [DGT]
Figure 46RE-110

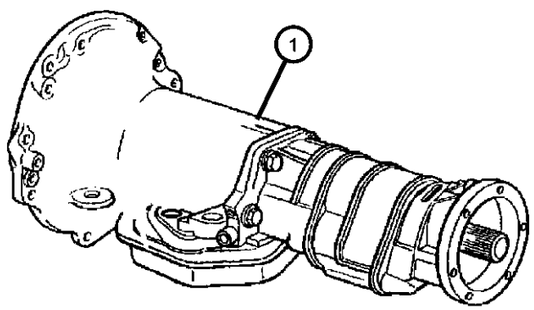

ITEM	PART NUMBER	QTY	LINE	SERIES	BODY	ENGINE	TRANS	TRIM	DESCRIPTION
NOTES:									
Sales Codes:									
EML = 5.9L SMPI MAGNUM V8 Engine									
1									TRANSMISSION PACKAGE
	05015276AA	1	1				DGT		52119847AA(Package Contains 52119847 Transmission, K4736591 Converter, K1949765 Screw)
	05010124AA								Mopar Automatic Transmission Fluid Quart
	05010125AC								Mopar Automatic Transmission Fluid Gallon
	05015277AA	1	5				DGT		52119848AA(Package Contains 52119848AA Transmission, K4736591 Converter, K1949765 Screw)
	05010124AA								Mopar Automatic Transmission Fluid Quart
	05010125AC								Mopar Automatic Transmission Fluid Gallon
-2									OVERDRIVE
	52118155	1	5				DGT		
	R2118155								Mopar Remanufactured Part
	U2118155								Mopar Remanufactured Part
	52118784	1	1				DGT		

DAKOTA (AN)

SERIES	LINE	BODY	ENGINE	TRANSMISSION
L = Quad Cab	1 = Dakota 2WD	31 = CLUB CAB 2-DR 6.5 FT BOX	EPO = 2.5L 4 Cyl.	DDC = TRANSMISSION - 5-SPEED HD MANUAL
L = Regular Cab	5 = Dakota 4WD	61 = REG CAB 6.5 FT BOX	EHO = 3.9L 6 Cyl.	DG4 = TRANSMISSION-MULTI-SPEED AUTO, 45RFE
L = Club Cab		84 = CREW CAB 4-DR W.B.1	EMO = 5.9L 8 Cyl.	DGK = TRANSMISSION - 4-SPD. AUTOMATIC,42RE
			EVO = 4.7L Magnum	DGT = TRANSMISSION - 4-SPD. AUTOMATIC,46RE
			EHC = 3.9L SMPI V6	DGO = AUTO. TRANS.
			EML = 5.9L V8 MPI Engine	
			EPE = 2.5L POWER TECH I-4 Cyl.	
			EVA = 4.7L V8 MPI	

Case and Related Parts [46 RE] [DGT]
Figure 46RE-217

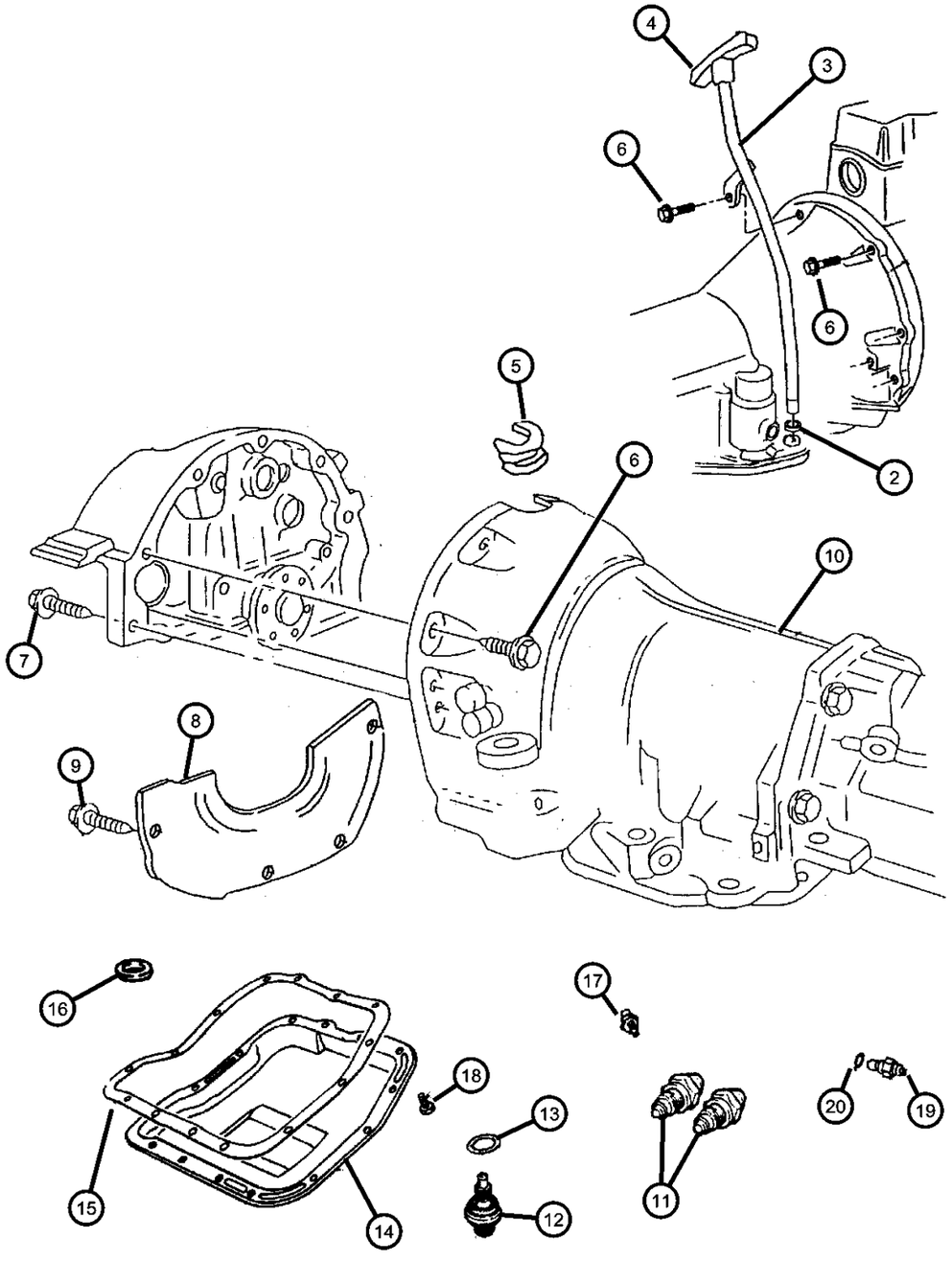

ITEM	PART NUMBER	QTY	LINE	SERIES	BODY	ENGINE	TRANS	TRIM	DESCRIPTION
NOTES:									
Sales Codes:									
EML = 5.9L SMPI MAGNUM V8 Engine									
-1									SEAL AND GASKET PACKAGE, Transmission
	04863884AF	1	1				DGT		
		1	5				DGT		
2	52118629AB	1					DGK, DGT		SEAL, Oil Filler Tube
3	52118619AC	1					DGT		TUBE, Oil Filler
4	52107769AA	1					DGK, DGT		INDICATOR, Transmission Fluid Level
5	52117709	1				EH0, EM0			GROMMET, Timing Probe
6	06022266	4					DG0		SCREW, Hex Head, .375-16x1.5
7	06024473	2					DG0		SCREW AND WASHER, Hex Head, .437-14x2.00
8	52117501	1				EM0	DGT		COVER, Transmission Dust
9	06023092	2					DGK, DGT		SCREW AND WASHER, Hex Head, .25-20x.50
10									CASE, Transmission
	52118757	1	1				DGT		
		1	5				DGT		
11									NUT, Inverted Flare, .62-18
	06033879	2	1				DGT		
		2	5				DGT		
12									SENSOR, Transmission Output Speed
	04412879	1	1				DGT		
		1	5				DGT		
13									O RING, Trans Speed Sensor
	06501701	1	1				DGT		
		1	5				DGT		
14									PAN, Transmission Oil
	52118780	1	1				DGT		
		1	5				DGT		
15									GASKET, Oil Pan

DAKOTA (AN)

SERIES	LINE	BODY	ENGINE	TRANSMISSION
L = Quad Cab	1 = Dakota 2WD	31 = CLUB CAB 2-DR 6.5 FT BOX	EPO = 2.5L 4 Cyl.	DDC = TRANSMISSION - 5-SPEED HD MANUAL
L = Regular Cab	5 = Dakota 4WD	61 = REG CAB 6.5 FT BOX	EHO = 3.9L 6 Cyl.	DG4 = TRANSMISSION-MULTI-SPEED AUTO, 45RFE
L = Club Cab		84 = CREW CAB 4-DR W.B.1	EMO = 5.9L 8 Cyl.	DGK = TRANSMISSION - 4-SPD. AUTOMATIC,42RE
			EVO = 4.7L Magnum	DGT = TRANSMISSION - 4-SPD. AUTOMATIC,46RE
			EHC = 3.9L SMPI V6	DGO = AUTO. TRANS.
			EML = 5.9L V8 MPI Engine	
			EPE = 2.5L POWER TECH I-4 Cyl.	
			EVA = 4.7L V8 MPI	

Case and Related Parts [46 RE] [DGT]
Figure 46RE-217

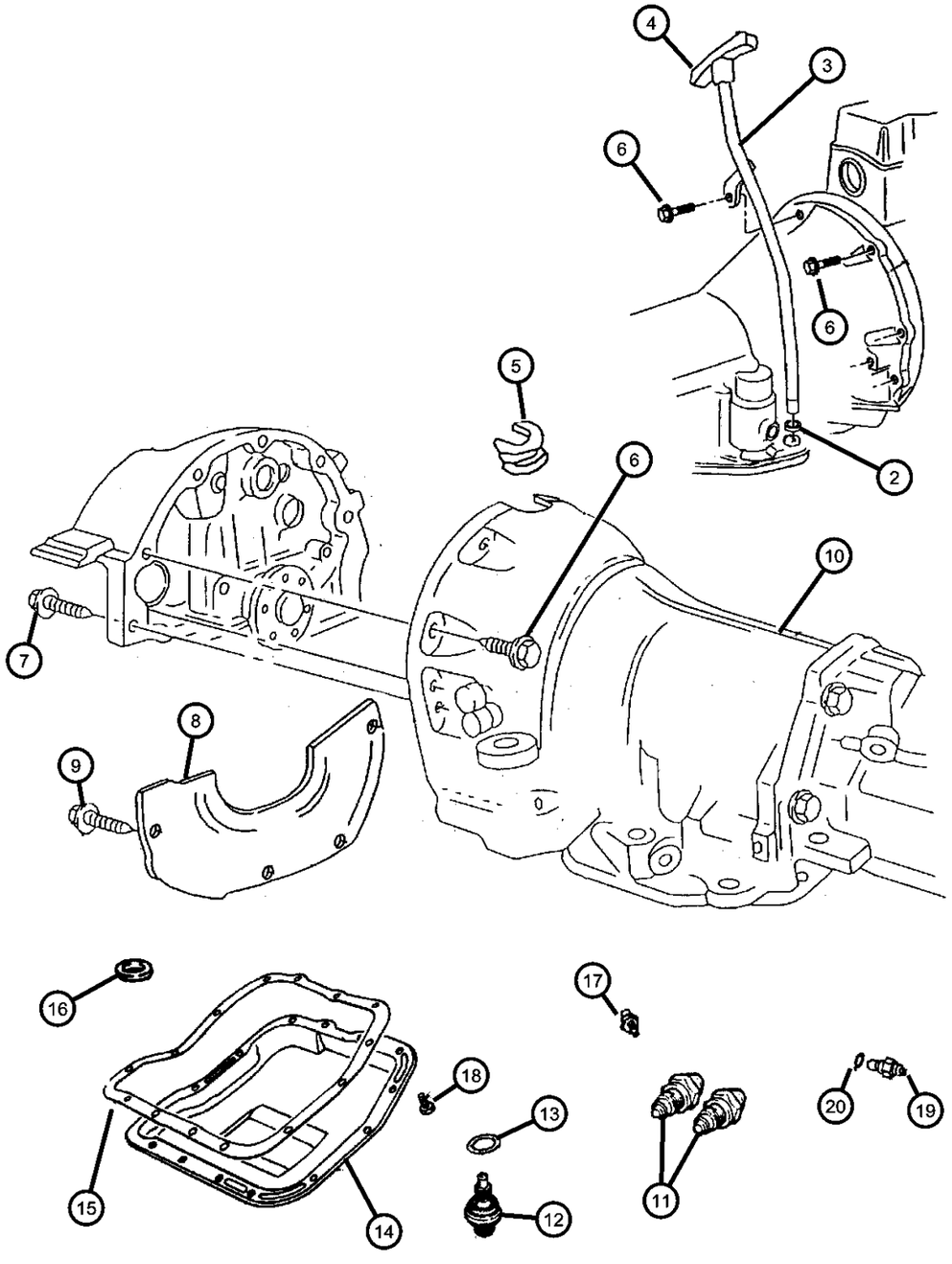

ITEM	PART NUMBER	QTY	LINE	SERIES	BODY	ENGINE	TRANS	TRIM	DESCRIPTION
	02464324	1	1				DGT		
		1	5				DGT		
16									MAGNET, Transmission
	03681601	1	1				DGT		
		1	5				DGT		
17									SCREW
	06036115AA	1	1				DGT		
		1	5				DGT		
18									SCREW AND WASHER, Hex Head, .312-18x.625
	04723548	12	1				DGT		
		12	5				DGT		
19									SWITCH, Neutral, Safety, Back Up
	56028181AB	1	1				DGT		
		1	5				DGT		
20									WASHER, Switch
	02408143	1	1				DGT		
		1	5				DGT		

DAKOTA (AN)

SERIES	LINE	BODY	ENGINE	TRANSMISSION
L = Quad Cab	1 = Dakota 2WD	31 = CLUB CAB 2-DR 6.5 FT BOX	EPO = 2.5L 4 Cyl.	DDC = TRANSMISSION - 5-SPEED HD MANUAL
L = Regular Cab	5 = Dakota 4WD	61 = REG CAB 6.5 FT BOX	EHO = 3.9L 6 Cyl.	DG4 = TRANSMISSION-MULTI-SPEED AUTO, 45RFE
L = Club Cab		84 = CREW CAB 4-DR W.B.1	EMO = 5.9L 8 Cyl.	DGK = TRANSMISSION - 4-SPD. AUTOMATIC,42RE
			EVO = 4.7L Magnum	DGT = TRANSMISSION - 4-SPD. AUTOMATIC,46RE
			EHC = 3.9L SMPI V6	DGO = AUTO. TRANS.
			EML = 5.9L V8 MPI Engine	
			EPE = 2.5L POWER TECH I-4 Cyl.	
			EVA = 4.7L V8 MPI	

Extension [46 RE] [DGT]
Figure 46RE-220

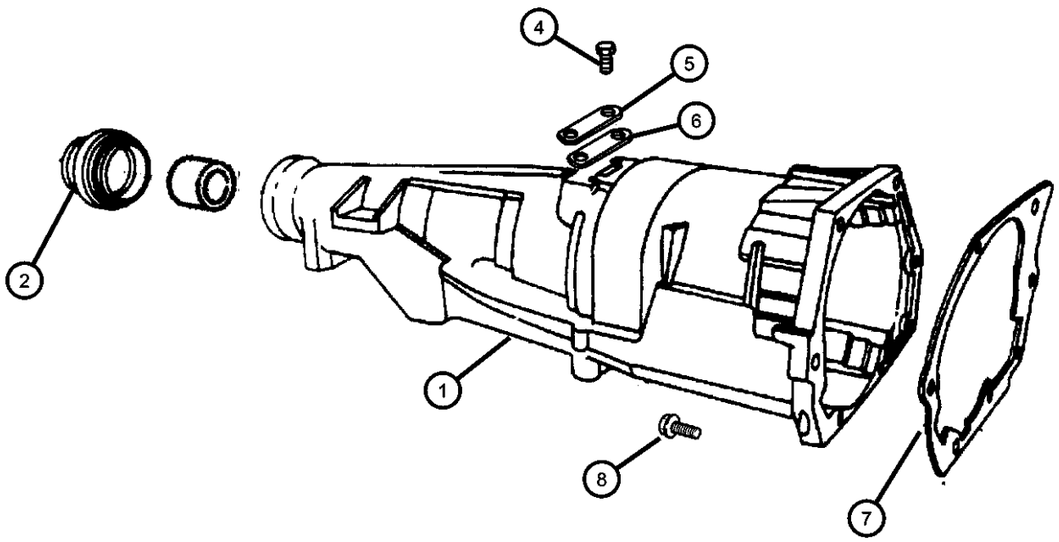

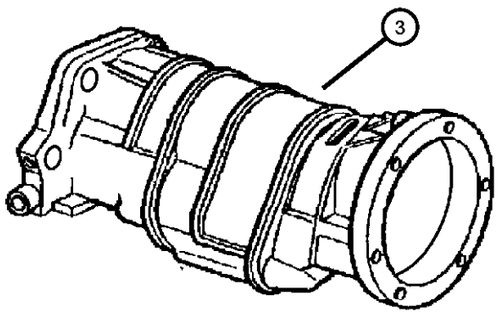

ITEM	PART NUMBER	QTY	LINE	SERIES	BODY	ENGINE	TRANS	TRIM	DESCRIPTION
NOTES:									
Sales Codes:									
EML = 5.9L SMPI MAGNUM V8 Engine									
1	05003231AA	1	1				DGT		CASE, Transmission Rear
2	04531216	1	1				DGT		SEAL, Extension Yoke
3	04797342	1	5				DGT		ADAPTER, Transfer Case
4	04797342	1							SCREW, 1/4-20 x 5/8“, (NOT SERVICED)
5									COVER, Transmission Converter
	02466957	1	1				DGT		
		1	5				DGK		
6									GASKET, Transmission
	02801398	1	1				DGT		
		1	5				DGT		
7									GASKET, Overdrive Piston Retainer
	04471565	1	1				DGT		
		1	5				DGT		
8									SCREW, Hex Flange Head, .375-16x1.38
	06036046AA	7	1				DGT		
		7	5				DGT		

DAKOTA (AN)

SERIES	LINE	BODY	ENGINE	TRANSMISSION
L = Quad Cab	1 = Dakota 2WD	31 = CLUB CAB 2-DR 6.5 FT BOX	EPO = 2.5L 4 Cyl.	DDC = TRANSMISSION - 5-SPEED HD MANUAL
L = Regular Cab	5 = Dakota 4WD	61 = REG CAB 6.5 FT BOX	EHO = 3.9L 6 Cyl.	DG4 = TRANSMISSION-MULTI-SPEED AUTO, 45RFE
L = Club Cab		84 = CREW CAB 4-DR W.B.1	EMO = 5.9L 8 Cyl.	DGK = TRANSMISSION - 4-SPD. AUTOMATIC,42RE
			EVO = 4.7L Magnum	DGT = TRANSMISSION - 4-SPD. AUTOMATIC,46RE
			EHC = 3.9L SMPI V6	DGO = AUTO. TRANS.
			EML = 5.9L V8 MPI Engine	
			EPE = 2.5L POWER TECH I-4 Cyl.	
			EVA = 4.7L V8 MPI	

AR = use ase required - = Non illustrrated part

Oil Pump [46 RE] [DGT]
Figure 46RE-325

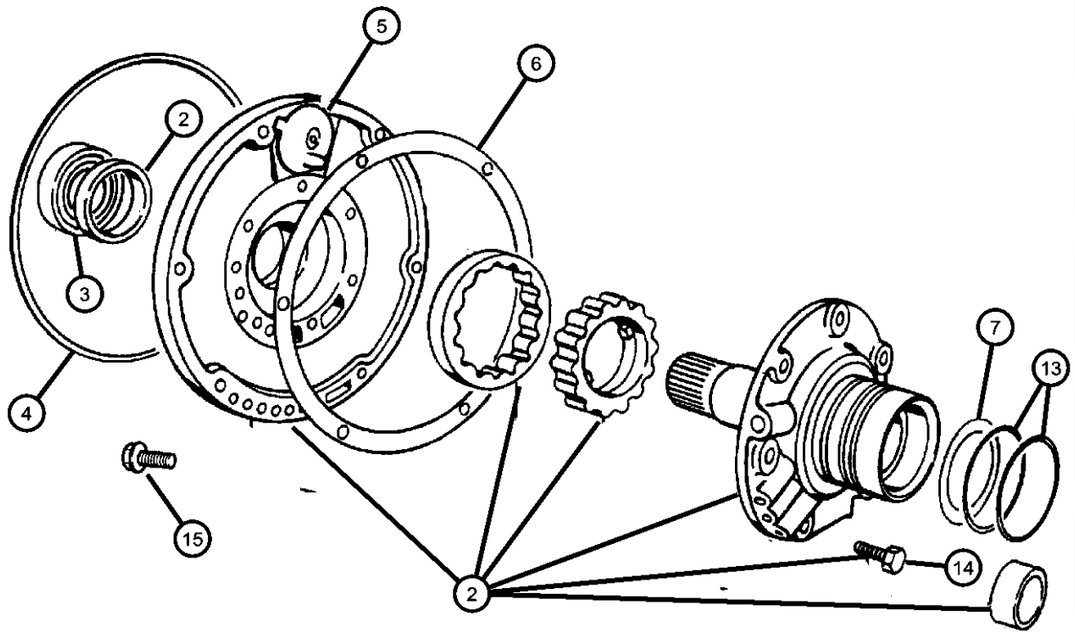

ITEM	PART NUMBER	QTY	LINE	SERIES	BODY	ENGINE	TRANS	TRIM	DESCRIPTION
NOTES:									
Sales Codes:									
EML = 5.9L SMPI MAGNUM V8 Engine									
-1									GASKET AND SEAL PACKAGE, Transmission Oil Pump
	04746109AB	1	1				DGT		
		1	5				DGT		
2									PUMP PACKAGE, Transmission
	04796467AB	1	1				DGT		
		1	5				DGT		
3									SEAL, Impeller Hub, 57.25mm OD
	04531225	1	1				DGT		
		1	5				DGT		
4									SEAL, Front Pump Housing
	01942021	1	1				DGT		
		1	5				DGT		
5									BAFFLE PACKAGE, Pump
	03420087	1	1				DGT		
		1	5				DGT		
6									GASKET, Transmission Oil Pump
	04028377	1	1				DGT		
		1	5				DGT		
7									THRUST WASHER, Front Clutch
	04617161	1	1				DGT		
		1	5				DGT		
-8									THRUST WASHER, Front Clutch, Pink .085
	04617162	1	1				DGT		
		1	5				DGT		
-9									THRUST WASHER, Front Clutch, Yellow .103
	04617163	1	1				DGT		
		1	5				DGT		
-10									THRUST WASHER, Front Clutch, Orange .121

DAKOTA (AN)

SERIES	LINE	BODY	ENGINE	TRANSMISSION
L = Quad Cab	1 = Dakota 2WD	31 = CLUB CAB 2-DR 6.5 FT BOX	EPO = 2.5L 4 Cyl.	DDC = TRANSMISSION - 5-SPEED HD MANUAL
L = Regular Cab	5 = Dakota 4WD	61 = REG CAB 6.5 FT BOX	EHO = 3.9L 6 Cyl.	DG4 = TRANSMISSION-MULTI-SPEED AUTO, 45RFE
L = Club Cab		84 = CREW CAB 4-DR W.B.1	EMO = 5.9L 8 Cyl.	DGK = TRANSMISSION - 4-SPD. AUTOMATIC,42RE
			EVO = 4.7L Magnum	DGT = TRANSMISSION - 4-SPD. AUTOMATIC,46RE
			EHC = 3.9L SMPI V6	DGO = AUTO. TRANS.
			EML = 5.9L V8 MPI Engine	
			EPE = 2.5L POWER TECH I-4 Cyl.	
			EVA = 4.7L V8 MPI	

Oil Pump [46 RE] [DGT]
Figure 46RE-325

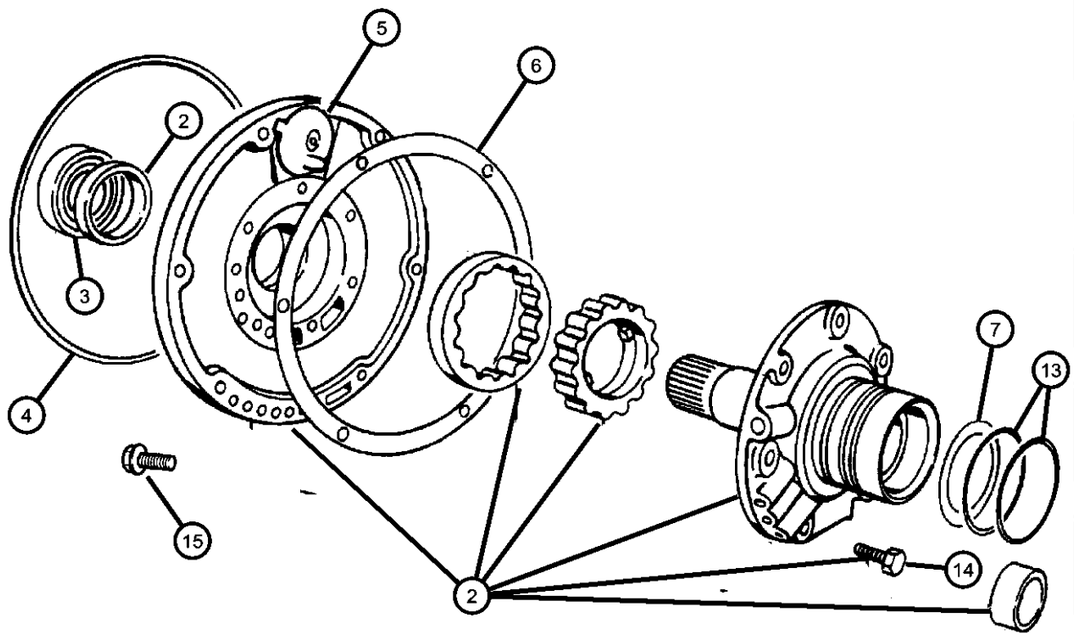

ITEM	PART NUMBER	QTY	LINE	SERIES	BODY	ENGINE	TRANS	TRIM	DESCRIPTION
	04617164	1	1				DGT		
		1	5				DGT		
-11									THRUST WASHER, Front Clutch, Blue .139"
	04617165	1	1				DGT		
		1	5				DGT		
-12									THRUST WASHER, Front Clutch, Black .157
	04617166	1	1				DGT		
		1	5				DGT		
13									SEAL, Reaction Shaft
	03743689	2	1				DGT		
		2	5				DGT		
14									SCREW, Hex Head, .312-18x.687
	00179815	6	1				DGT		
		6	5				DGT		
15									SCREW AND WASHER, Hex Flange Head, .312-18x1.375
	06023943	7	1				DGT		
		7	5				DGT		

DAKOTA (AN)

SERIES	LINE	BODY	ENGINE	TRANSMISSION
L = Quad Cab	1 = Dakota 2WD	31 = CLUB CAB 2-DR 6.5 FT BOX	EPO = 2.5L 4 Cyl.	DDC = TRANSMISSION - 5-SPEED HD MANUAL
L = Regular Cab	5 = Dakota 4WD	61 = REG CAB 6.5 FT BOX	EHO = 3.9L 6 Cyl.	DG4 = TRANSMISSION-MULTI-SPEED AUTO, 45RFE
L = Club Cab		84 = CREW CAB 4-DR W.B.1	EMO = 5.9L 8 Cyl.	DGK = TRANSMISSION - 4-SPD. AUTOMATIC,42RE
			EVO = 4.7L Magnum	DGT = TRANSMISSION - 4-SPD. AUTOMATIC,46RE
			EHC = 3.9L SMPI V6	DGO = AUTO. TRANS.
			EML = 5.9L V8 MPI Engine	
			EPE = 2.5L POWER TECH I-4 Cyl.	
			EVA = 4.7L V8 MPI	

Clutch Front and Rear [46 RE] [DGT]
Figure 46RE-415

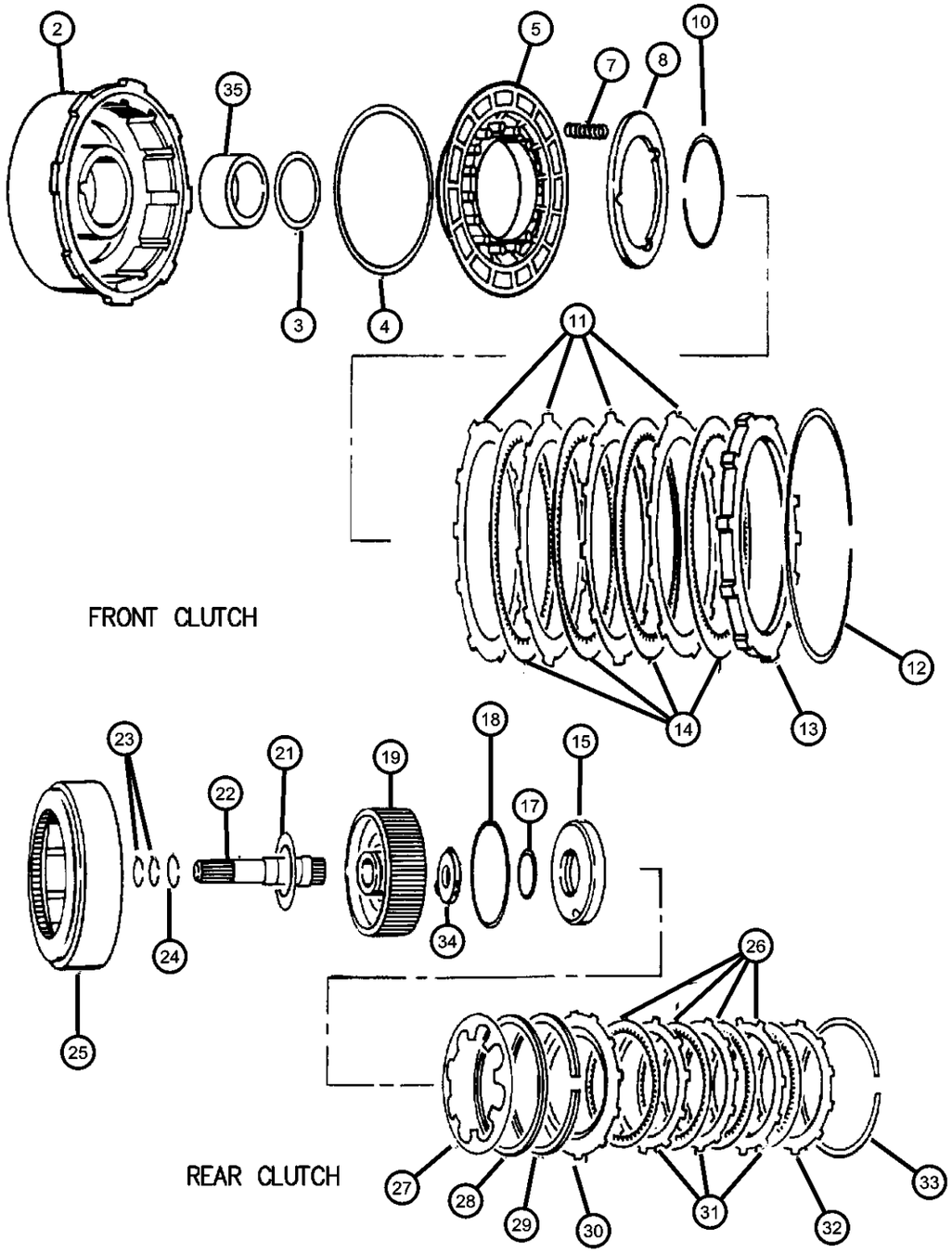

ITEM	PART NUMBER	QTY	LINE	SERIES	BODY	ENGINE	TRANS	TRIM	DESCRIPTION
NOTES:									
Sales Codes:									
EML = 5.9L SMPI MAGNUM V8 Engine									
-1									SEAL PACKAGE, Transmission Clutch
	04637078	1	1				DGT		
		1	5				DGT		
2									RETAINER, Clutch
	04058437AB	1	1				DGT		
		1	5				DGT		
3									SEAL, Front Clutch Piston
	03410226	1	1				DGT		
		1	5				DGT		
4									SEAL, Front Piston Clutch
	04058484	1	1				DGT		
		1	5				DGT		
5									PISTON, Clutch
	02464651AB	1	1				DGT		
		1	5				DGT		
-6									CHECK BALL, Dia-.187
	00147483	1	1				DGT		
		1	5				DGT		
7									SPRING, Front Clutch
	04617205	9	1				DGT		
		9	5				DGT		
8									RETAINER, Transmission
	02801949	1	1				DGT		
		1	5				DGT		
-9									CHECK BALL, Dia-.187
	00147483	1	1				DGT		
		1	5				DGT		
10									SNAP RING
	02124824	1	1				DGT		

DAKOTA (AN)

SERIES	LINE	BODY	ENGINE	TRANSMISSION
L = Quad Cab	1 = Dakota 2WD	31 = CLUB CAB 2-DR 6.5 FT BOX	EPO = 2.5L 4 Cyl.	DDC = TRANSMISSION - 5-SPEED HD MANUAL
L = Regular Cab	5 = Dakota 4WD	61 = REG CAB 6.5 FT BOX	EHO = 3.9L 6 Cyl.	DG4 = TRANSMISSION-MULTI-SPEED AUTO, 45RFE
L = Club Cab		84 = CREW CAB 4-DR W.B.1	EMO = 5.9L 8 Cyl.	DGK = TRANSMISSION - 4-SPD. AUTOMATIC,42RE
			EVO = 4.7L Magnum	DGT = TRANSMISSION - 4-SPD. AUTOMATIC,46RE
			EHC = 3.9L SMPI V6	DGO = AUTO. TRANS.
			EML = 5.9L V8 MPI Engine	
			EPE = 2.5L POWER TECH I-4 Cyl.	
			EVA = 4.7L V8 MPI	

AR = use ase required - = Non illustrrated part

Clutch Front and Rear [46 RE] [DGT]
Figure 46RE-415

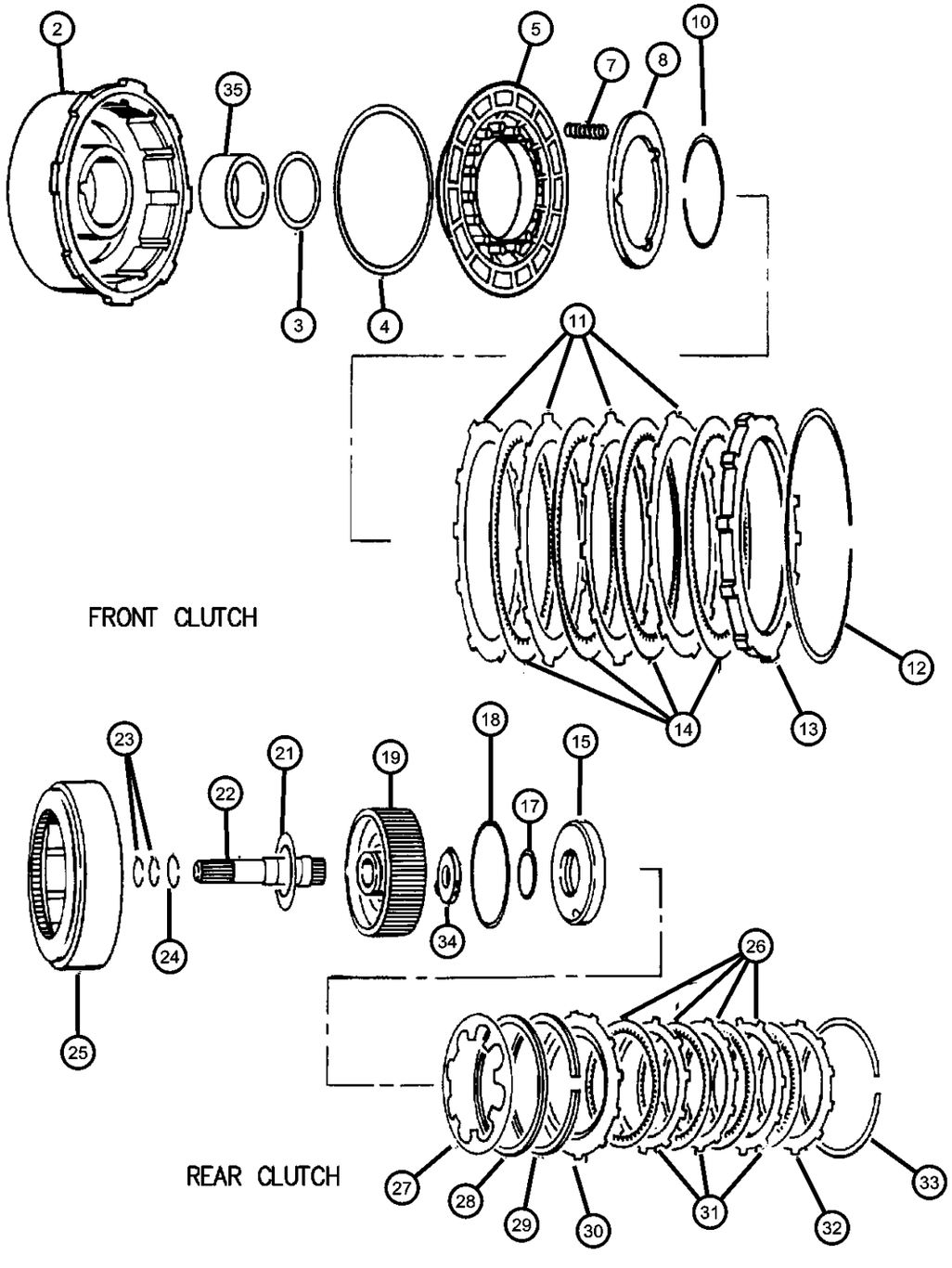

ITEM	PART NUMBER	QTY	LINE	SERIES	BODY	ENGINE	TRANS	TRIM	DESCRIPTION
	02124872	1	5				DGT		
11									PLATE, Clutch Separator
	02124826AB	3	1				DGT		
		3	5				DGT		
12									SNAP RING
	03410570	1	1				DGT		
		1	5				DGT		
13									PLATE, Transmission Clutch Reaction
	04617567	1	1				DGT		
		1	5				DGT		
14									DISC, Direct Clutch
	04617201AB	3	1				DGT		
		3	5				DGT		
15									PISTON, Clutch
	03743624AB	1	1				DGT		
		1	5				DGT		
-16									CHECK BALL, Dia-.187
	00147483	1	1				DGT		
		1	5				DGT		
17									SEAL, Rear Clutch Piston
	01942054	1	1				DGT		
		1	5				DGT		
18									SEAL, Rear Clutch Piston
	02124835	1	1				DGT		
		1	5				DGT		
19									RETAINER, Transmission
	04617855	1	1				DGT		
		1	5				DGT		
-20									SEAL, Rear Clutch Retainer
	04058443	1	1				DGT		
		1	5				DGT		

DAKOTA (AN)

SERIES	LINE	BODY	ENGINE	TRANSMISSION
L = Quad Cab L = Regular Cab L = Club Cab	1 = Dakota 2WD 5 = Dakota 4WD	31 = CLUB CAB 2-DR 6.5 FT BOX 61 = REG CAB 6.5 FT BOX 84 = CREW CAB 4-DR W.B.1	EPO = 2.5L 4 Cyl. EHO = 3.9L 6 Cyl. EMO = 5.9L 8 Cyl. EVO = 4.7L Magnum EHC = 3.9L SMPI V6 EML = 5.9L V8 MPI Engine EPE = 2.5L POWER TECH I-4 Cyl. EVA = 4.7L V8 MPI	DDC = TRANSMISSION - 5-SPEED HD MANUAL DG4 = TRANSMISSION-MULTI-SPEED AUTO, 45RFE DGK = TRANSMISSION - 4-SPD. AUTOMATIC,42RE DGT = TRANSMISSION - 4-SPD. AUTOMATIC,46RE DGO = AUTO. TRANS.

AR = use ase required - = Non illustrrated part

Clutch Front and Rear [46 RE] [DGT]
Figure 46RE-415

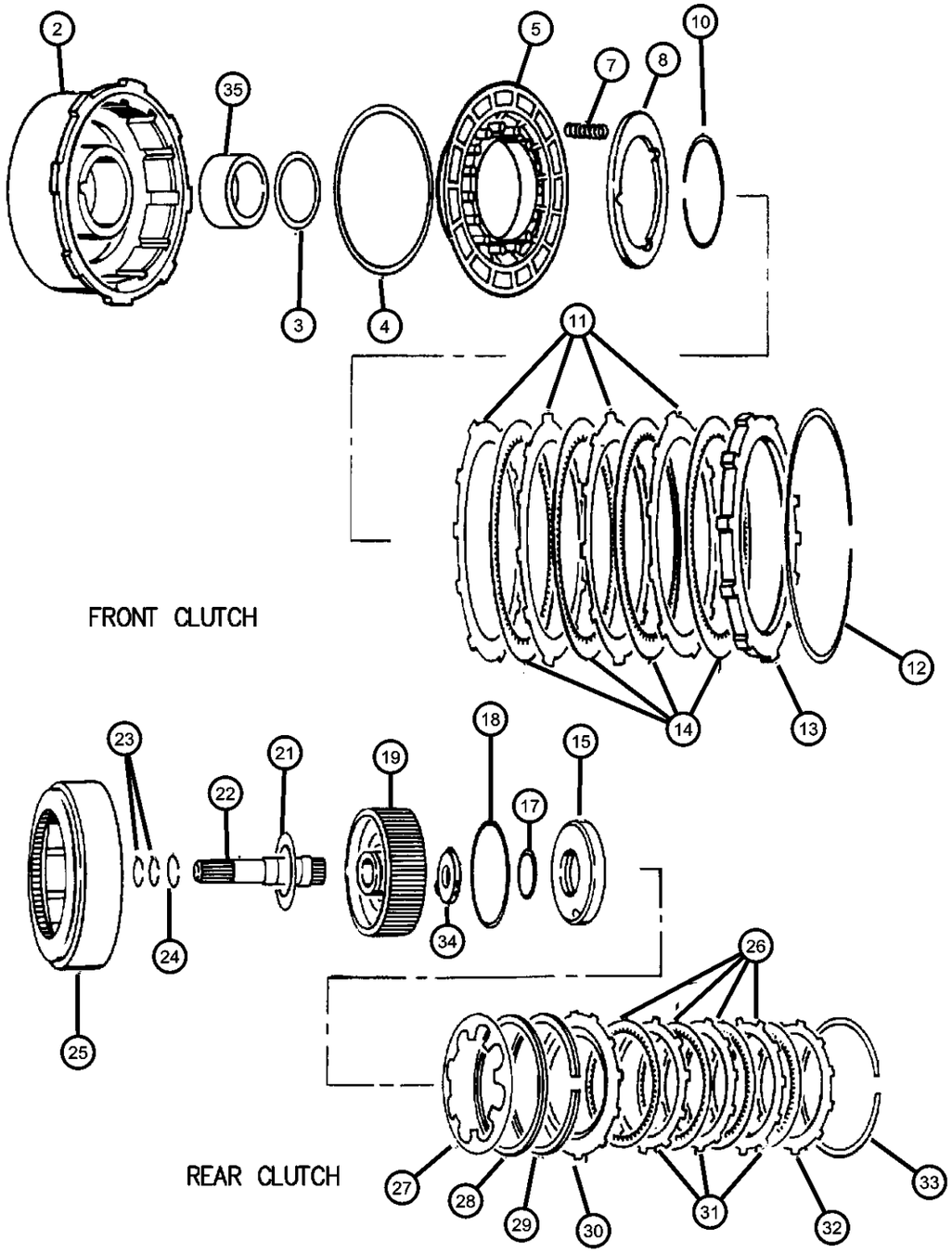

ITEM	PART NUMBER	QTY	LINE	SERIES	BODY	ENGINE	TRANS	TRIM	DESCRIPTION
21									THRUST WASHER, Front Clutch
	04617161	1	1				DGT		Rear
		1	5				DGT		Rear
22									INPUT SHAFT, Transmission
	04617396	1	1				DGT		
		1	5				DGT		
23									SEAL, Input Shaft
	04617418AB	1	1				DGT		
		1	5				DGT		
24									SNAP RING
	02124872	1	1				DGT		
		1	5				DGT		
25									RETAINER, Rear Clutch
	03743622	1	1				DGT		
		1	5				DGT		
26									DISC, Clutch
	02801992AB	4	1				DGT		
		4	5				DGT		
27									SPRING, Rear Clutch Piston
	03743621AB	1	1				DGT		
		1	5				DGT		
28									SPACER, Rear Clutch Piston
	03515077	1	1				DGT		
		1	5				DGT		
29									SPRING, Rear Clutch
	02466806	1	1				DGT		
		1	5				DGT		
30									PLATE, Clutch Pressure
	02466803	1	1				DGT		
		1	5				DGT		
31									PLATE, Clutch Separator

DAKOTA (AN)

SERIES	LINE	BODY	ENGINE	TRANSMISSION
L = Quad Cab L = Regular Cab L = Club Cab	1 = Dakota 2WD 5 = Dakota 4WD	31 = CLUB CAB 2-DR 6.5 FT BOX 61 = REG CAB 6.5 FT BOX 84 = CREW CAB 4-DR W.B.1	EPO = 2.5L 4 Cyl. EHO = 3.9L 6 Cyl. EMO = 5.9L 8 Cyl. EVO = 4.7L Magnum EHC = 3.9L SMPI V6 EML = 5.9L V8 MPI Engine EPE = 2.5L POWER TECH I-4 Cyl. EVA = 4.7L V8 MPI	DDC = TRANSMISSION - 5-SPEED HD MANUAL DG4 = TRANSMISSION-MULTI-SPEED AUTO, 45RFE DGK = TRANSMISSION - 4-SPD. AUTOMATIC,42RE DGT = TRANSMISSION - 4-SPD. AUTOMATIC,46RE DGO = AUTO. TRANS.

AR = use ase required - = Non illustrrated part

Clutch Front and Rear [46 RE] [DGT]
Figure 46RE-415

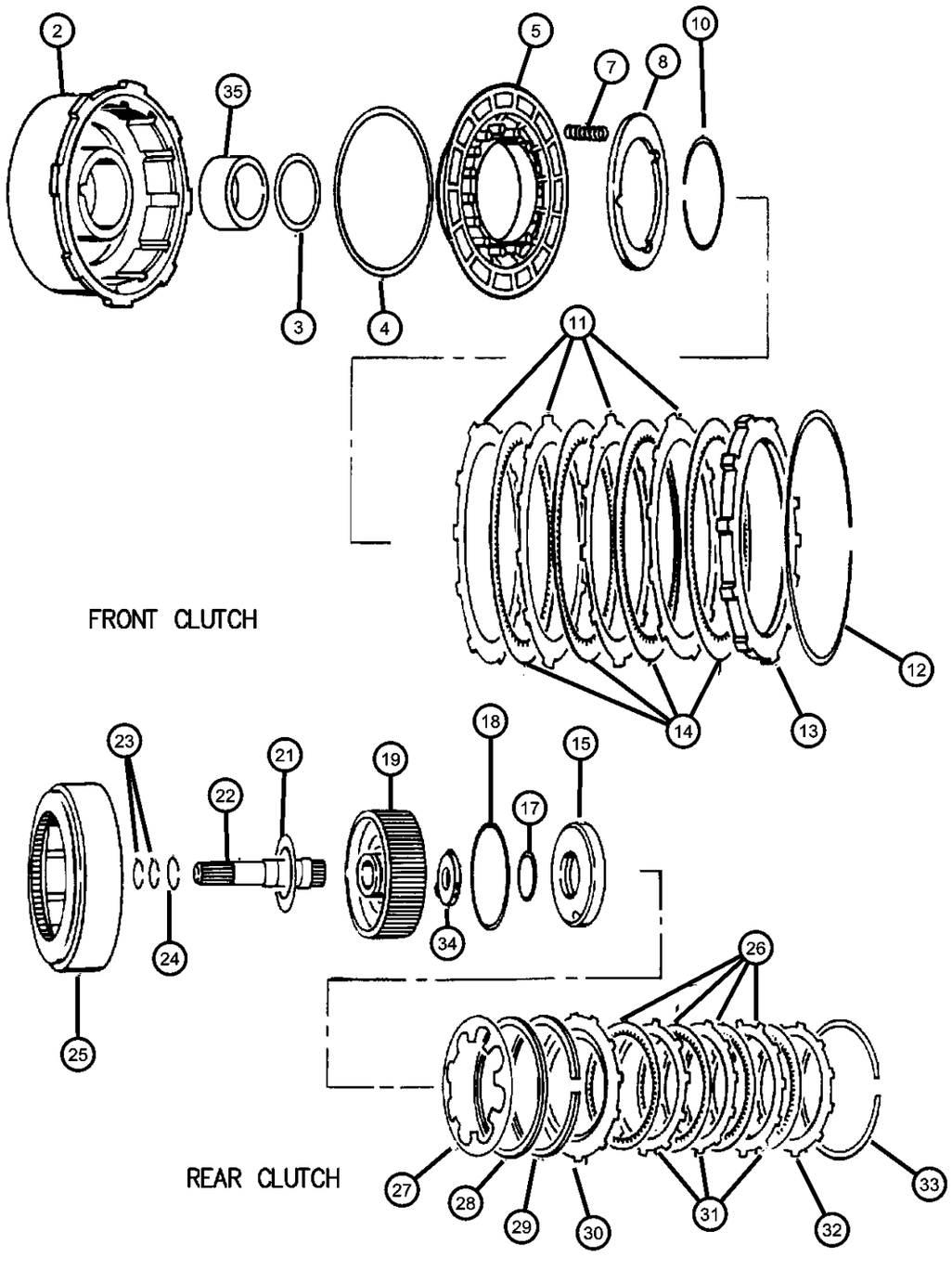

ITEM	PART NUMBER	QTY	LINE	SERIES	BODY	ENGINE	TRANS	TRIM	DESCRIPTION
	52118812AA	3	1				DGT		Rear
		3	5				DGT		Rear
32									PLATE, Transmission Clutch Reaction
	04617567	1	1				DGT		Rear
		1	5				DGT		Rear
33									SNAP RING
	01942063AB	1	1				DGT		
		1	5				DGT		
34									THRUST WASHER, Output Shaft, Red .068
	04505186	1	1				DGT		
		1	5				DGT		
35									BUSHING, Front Clutch
	04058647	1	1				DGT		
		1	5				DGT		

DAKOTA (AN)

SERIES	LINE	BODY	ENGINE	TRANSMISSION
L = Quad Cab	1 = Dakota 2WD	31 = CLUB CAB 2-DR 6.5 FT BOX	EPO = 2.5L 4 Cyl.	DDC = TRANSMISSION - 5-SPEED HD MANUAL
L = Regular Cab	5 = Dakota 4WD	61 = REG CAB 6.5 FT BOX	EHO = 3.9L 6 Cyl.	DG4 = TRANSMISSION-MULTI-SPEED AUTO, 45RFE
L = Club Cab		84 = CREW CAB 4-DR W.B.1	EMO = 5.9L 8 Cyl.	DGK = TRANSMISSION - 4-SPD. AUTOMATIC,42RE
			EVO = 4.7L Magnum	DGT = TRANSMISSION - 4-SPD. AUTOMATIC,46RE
			EHC = 3.9L SMPI V6	DGO = AUTO. TRANS.
			EML = 5.9L V8 MPI Engine	
			EPE = 2.5L POWER TECH I-4 Cyl.	
			EVA = 4.7L V8 MPI	

AR = use ase required - = Non illustrrated part

Intermedate Shaft [46 RE] [DGT]
Figure 46RE-425

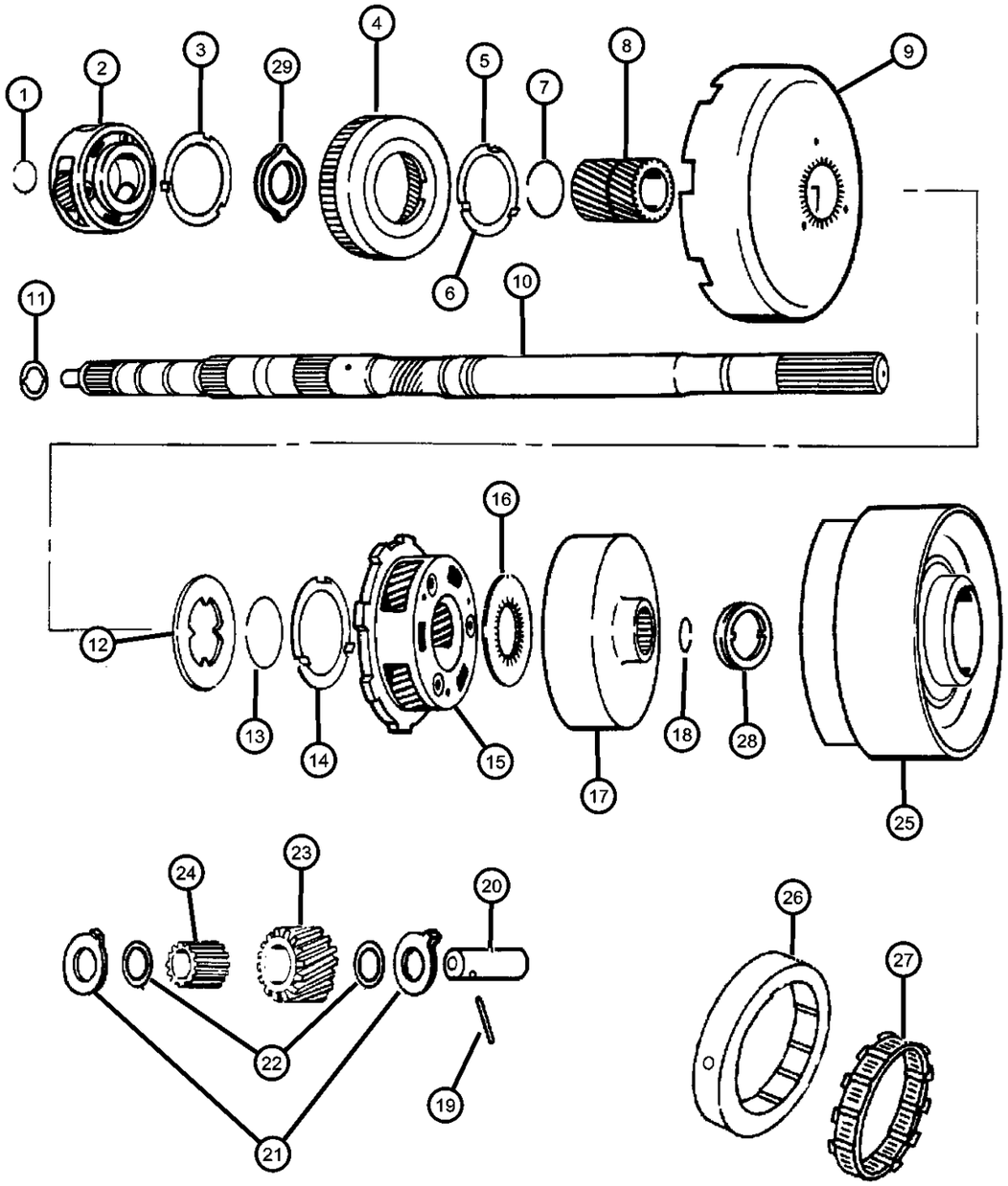

FRONT & REAR PLANET PINION CARRIER GEARS

ITEM	PART NUMBER	QTY	LINE	SERIES	BODY	ENGINE	TRANS	TRIM	DESCRIPTION
NOTES:									
Sales Codes:									
EML = 5.9L SMPI MAGNUM V8 Engine									
1									SNAP RING, 1.108 Free Diameter
	06024312	1	1				DGT		
		1	5				DGT		
2									CARRIER, Planetary Pinion
	52118693	1	1				DGT		
		1	5				DGT		
3									THRUST WASHER, Planetary Carrier
	02801060	1	1				DGT		
		1	5				DGT		
4									GEAR, Front Annulus
	02892656	1	1				DGT		
		1	5				DGT		
5									THRUST WASHER, Planetary Carrier, 4 Tabs
	04617888	1	1				DGT		4 Tab
		1	5				DGT		4 Tab
6									WASHER, 6 Tabs
	04618000	1	1				DGT		
		1	5				DGT		
7									SNAP RING, Sun Gear
	01736521	1	1				DGT		
		1	5				DGT		
8									GEAR, Sun
	02801311	1	1				DGT		
		1	5				DGT		
9									SHELL, Sun Gear
	04617978	1	1				DGT		
		1	5				DGT		
10									INTERMEDIATE SHAFT, Transmission

DAKOTA (AN)

SERIES	LINE	BODY	ENGINE	TRANSMISSION
L = Quad Cab L = Regular Cab L = Club Cab	1 = Dakota 2WD 5 = Dakota 4WD	31 = CLUB CAB 2-DR 6.5 FT BOX 61 = REG CAB 6.5 FT BOX 84 = CREW CAB 4-DR W.B.1	EPO = 2.5L 4 Cyl. EHO = 3.9L 6 Cyl. EMO = 5.9L 8 Cyl. EVO = 4.7L Magnum EHC = 3.9L SMPI V6 EML = 5.9L V8 MPI Engine EPE = 2.5L POWER TECH I-4 Cyl. EVA = 4.7L V8 MPI	DDC = TRANSMISSION - 5-SPEED HD MANUAL DG4 = TRANSMISSION-MULTI-SPEED AUTO, 45RFE DGK = TRANSMISSION - 4-SPD. AUTOMATIC,42RE DGT = TRANSMISSION - 4-SPD. AUTOMATIC,46RE DGO = AUTO. TRANS.

Intermedate Shaft [46 RE] [DGT]
Figure 46RE-425

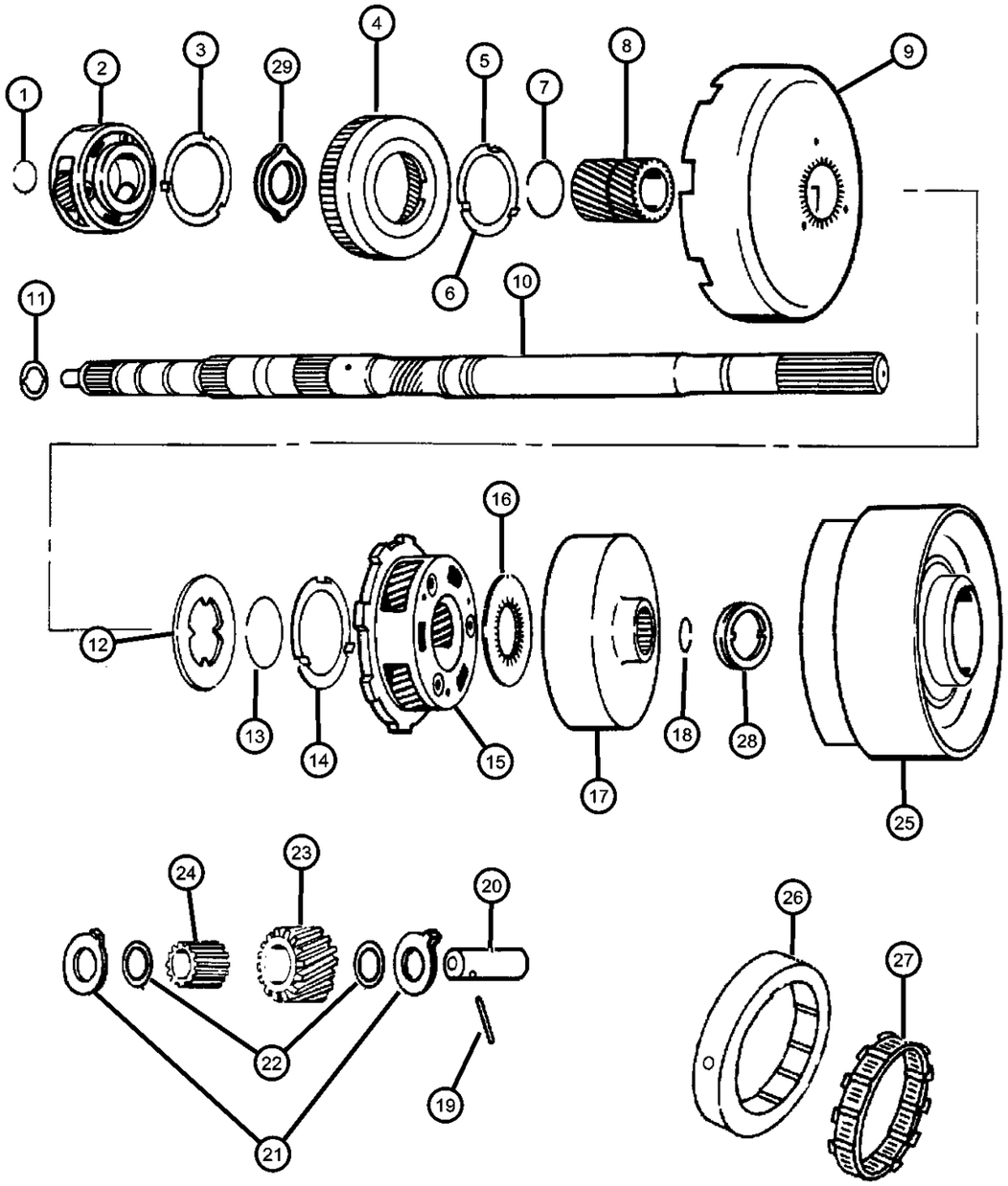

ITEM	PART NUMBER	QTY	LINE	SERIES	BODY	ENGINE	TRANS	TRIM	DESCRIPTION
	04617611	1	1				DGT		
		1	5				DGT		
11									PLATE, Transmission Module
	04505188	1	1				DGT		
		1	5				DGT		
12									PLATE, Sun Gear Driving Shell
	01942080	1	1				DGT		
		1	5				DGT		
13									SNAP RING, Sun Gear
	01736521	1	1				DGT		
		1	5				DGT		
14									THRUST WASHER, Planetary Carrier
	02801060	1	1				DGT		
		1	5				DGT		
15									CARRIER, Planetary Pinion
	02801061	1	1				DGT		
		1	5				DGT		
16									PLATE, Annulus Gear Thrust
	02400580	1	1				DGT		
		1	5				DGT		
17									GEAR, Rear Annulus
	04810002AB	1	1				DGT		
		1	5				DGT		
18									SNAP RING
	06033591	1	1				DGT		
		1	5				DGT		
19									DOWEL, .108x1.00
	06024666	4	1				DGT		
		4	5				DGT		
20									SHAFT, Planetary
	04428223	4	1				DGT		

DAKOTA (AN)

SERIES	LINE	BODY	ENGINE	TRANSMISSION
L = Quad Cab	1 = Dakota 2WD	31 = CLUB CAB 2-DR 6.5 FT BOX	EPO = 2.5L 4 Cyl.	DDC = TRANSMISSION - 5-SPEED HD MANUAL
L = Regular Cab	5 = Dakota 4WD	61 = REG CAB 6.5 FT BOX	EHO = 3.9L 6 Cyl.	DG4 = TRANSMISSION-MULTI-SPEED AUTO, 45RFE
L = Club Cab		84 = CREW CAB 4-DR W.B.1	EMO = 5.9L 8 Cyl.	DGK = TRANSMISSION - 4-SPD. AUTOMATIC,42RE
			EVO = 4.7L Magnum	DGT = TRANSMISSION - 4-SPD. AUTOMATIC,46RE
			EHC = 3.9L SMPI V6	DGO = AUTO. TRANS.
			EML = 5.9L V8 MPI Engine	
			EPE = 2.5L POWER TECH I-4 Cyl.	
			EVA = 4.7L V8 MPI	

AR = use ase required - = Non illustrrated part

Intermedate Shaft [46 RE] [DGT]
Figure 46RE-425

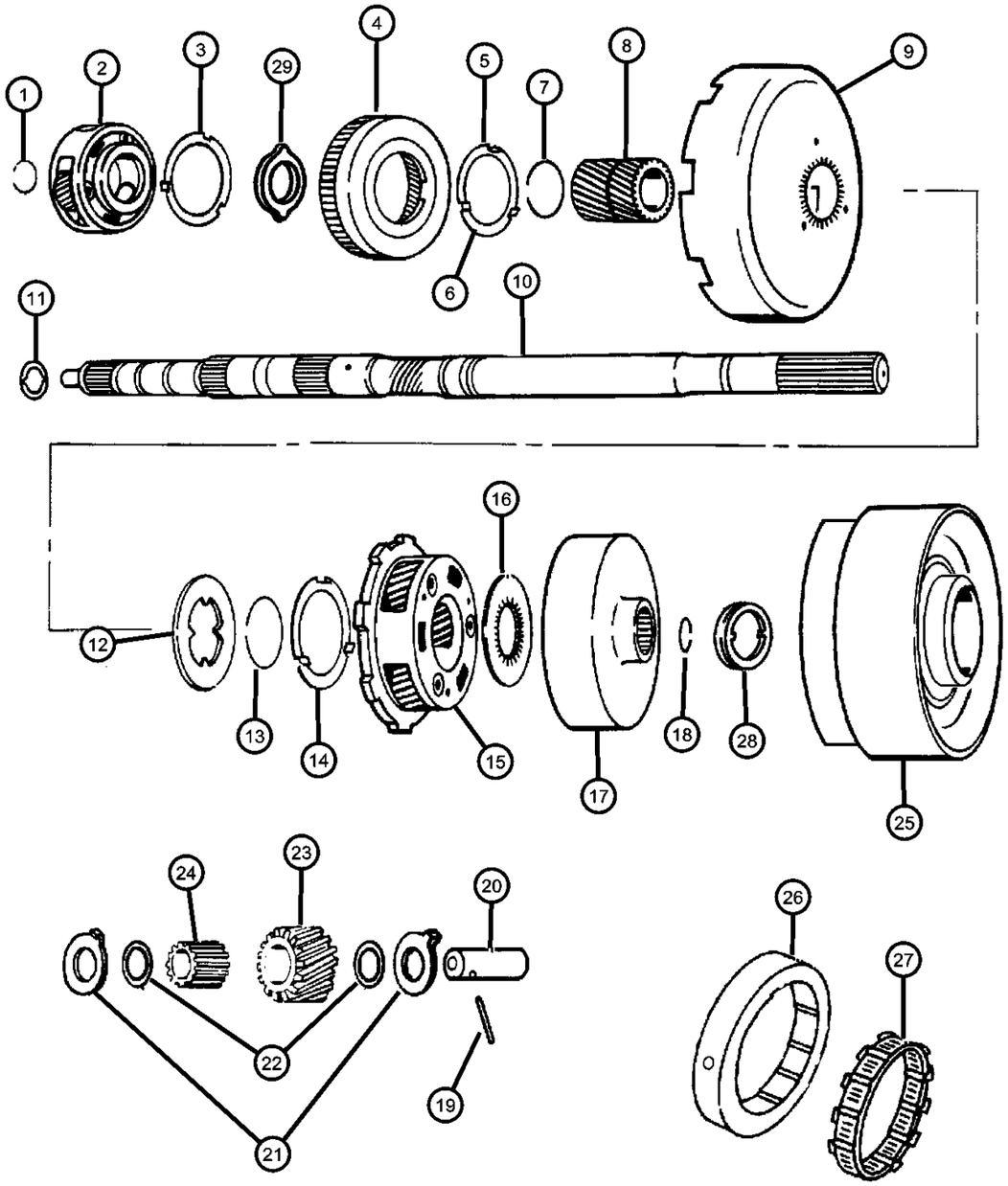

FRONT & REAR PLANET PINION CARRIER GEARS

ITEM	PART NUMBER	QTY	LINE	SERIES	BODY	ENGINE	TRANS	TRIM	DESCRIPTION
		4	5				DGT		
21									THRUST WASHER, Planetary Carrier
	02801315	8	1				DGT		Front and Rear
		8	5				DGT		Front and Rear
22									THRUST WASHER, Planet Pinion
	02204649	10	1				DGT		
		10	5				DGT		
23									PINION, Transmission Planetary
	02400667	5	1				DGT		
		5	5				DGT		
24									ROLLER, Front and Rear Pinion
	03743664	92	1				DGT		
		92	5				DGT		
25									DRUM, Automatic Transmission
	52118057	1	1				DGT		
		1	5				DGT		
26									CAM, Overrunning Clutch
	04471473	1	1				DGT		
		1	5				DGT		
27									CLUTCH, Overrunning
	04617199	1	1				DGT		
		1	5				DGT		
28									THRUST WASHER, Reverse Drum
	52118059	1	1				DGT		
		1	5				DGT		
29									PLATE, Annulus Gear Thrust
	02400580	1	1				DGT		
		1	5				DGT		

DAKOTA (AN)

SERIES	LINE	BODY	ENGINE	TRANSMISSION
L = Quad Cab L = Regular Cab L = Club Cab	1 = Dakota 2WD 5 = Dakota 4WD	31 = CLUB CAB 2-DR 6.5 FT BOX 61 = REG CAB 6.5 FT BOX 84 = CREW CAB 4-DR W.B.1	EPO = 2.5L 4 Cyl. EHO = 3.9L 6 Cyl. EMO = 5.9L 8 Cyl. EVO = 4.7L Magnum EHC = 3.9L SMPI V6 EML = 5.9L V8 MPI Engine EPE = 2.5L POWER TECH I-4 Cyl. EVA = 4.7L V8 MPI	DDC = TRANSMISSION - 5-SPEED HD MANUAL DG4 = TRANSMISSION-MULTI-SPEED AUTO, 45RFE DGK = TRANSMISSION - 4-SPD. AUTOMATIC,42RE DGT = TRANSMISSION - 4-SPD. AUTOMATIC,46RE DGO = AUTO. TRANS.

Output Shaft [46 RE] [DGT]
Figure 46RE-430

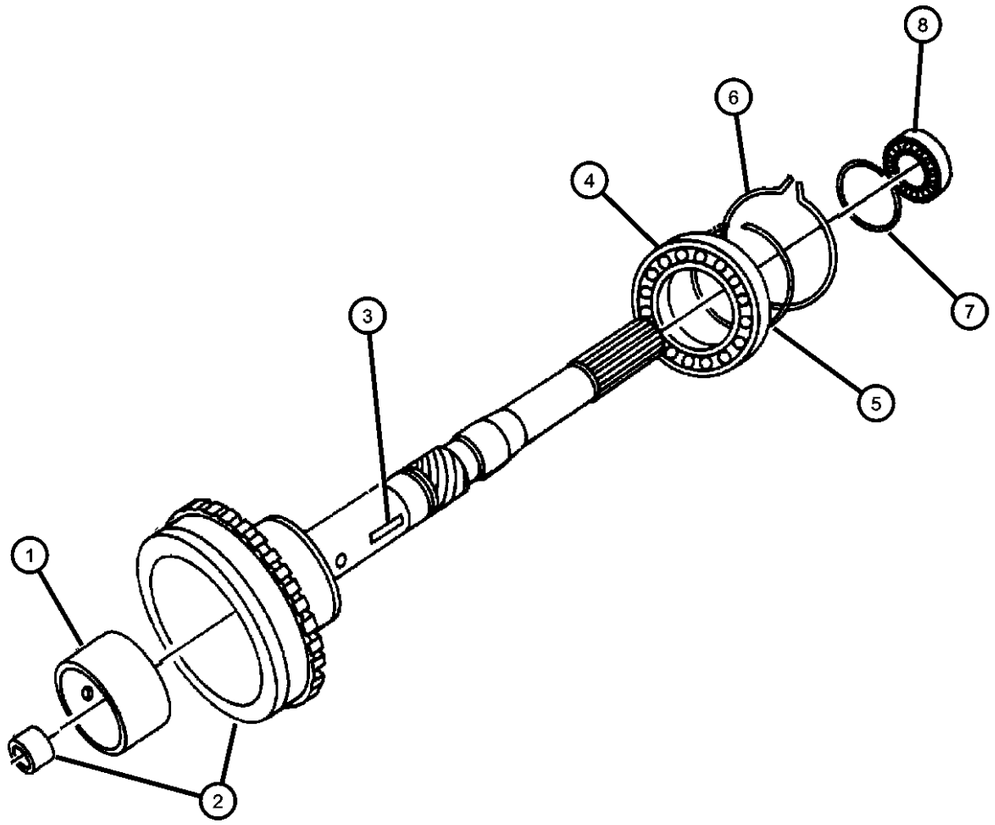

ITEM	PART NUMBER	QTY	LINE	SERIES	BODY	ENGINE	TRANS	TRIM	DESCRIPTION
NOTES:									
Sales Codes:									
EML = 5.9L SMPI MAGNUM V8 Engine									
1		1							BUSHING, (NOT SERVICED)
2									SHAFT, Output
	04798536	1	5				DGT		
	05003232AA	1	1				DGT		
3	05003232AA	1							KEY, Shaft, (NOT SERVICED)
4									BEARING, Output Shaft
	04461008	1	1				DGT		
		1	5				DGT		
5									SNAP RING
	04461068	1	1				DGT		
		1	5				DGK		
6									SNAP RING
	04461057	1	1				DGT		
		1	5				DGT		
7	04461069	1	1				DGT		SNAP RING
8									BEARING, Output Shaft
	02466224	1	1				DGT		
	04461008	1	5				DGT		

DAKOTA (AN)

SERIES	LINE	BODY	ENGINE	TRANSMISSION
L = Quad Cab L = Regular Cab L = Club Cab	1 = Dakota 2WD 5 = Dakota 4WD	31 = CLUB CAB 2-DR 6.5 FT BOX 61 = REG CAB 6.5 FT BOX 84 = CREW CAB 4-DR W.B.1	EPO = 2.5L 4 Cyl. EHO = 3.9L 6 Cyl. EMO = 5.9L 8 Cyl. EVO = 4.7L Magnum EHC = 3.9L SMPI V6 EML = 5.9L V8 MPI Engine EPE = 2.5L POWER TECH I-4 Cyl. EVA = 4.7L V8 MPI	DDC = TRANSMISSION - 5-SPEED HD MANUAL DG4 = TRANSMISSION-MULTI-SPEED AUTO, 45RFE DGK = TRANSMISSION - 4-SPD. AUTOMATIC,42RE DGT = TRANSMISSION - 4-SPD. AUTOMATIC,46RE DGO = AUTO. TRANS.

Bands [46 RE] [DGT]
Figure 46RE-515

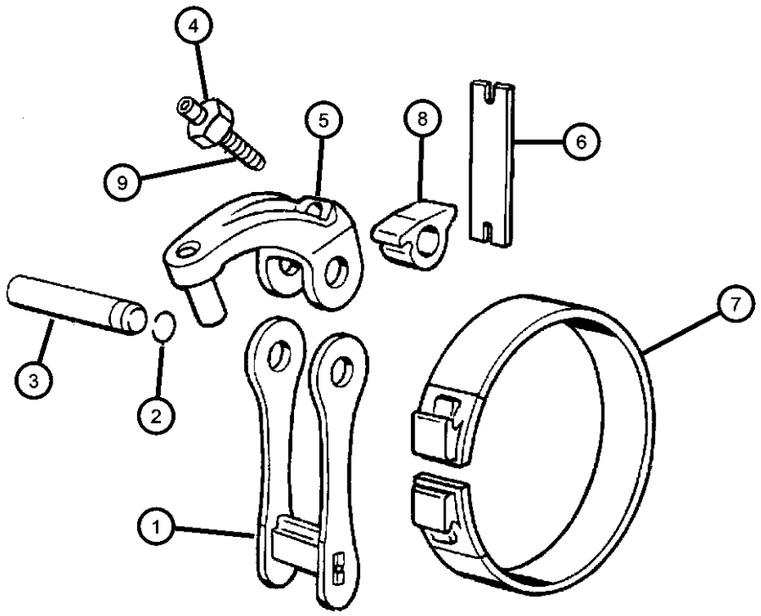

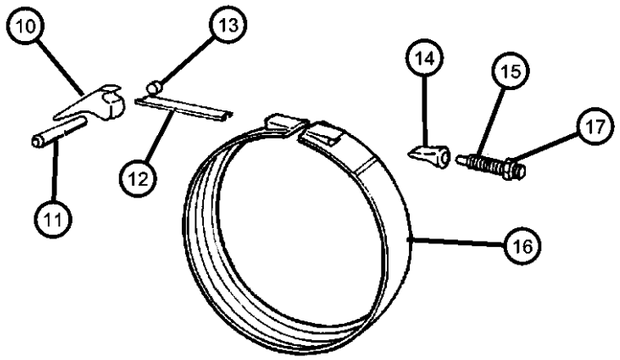

ITEM	PART NUMBER	QTY	LINE	SERIES	BODY	ENGINE	TRANS	TRIM	DESCRIPTION
NOTES:									
Sales Codes:									
EML = 5.9L SMPI MAGNUM V8 Engine									
1									LINK, Transmission Reverse Band
	04617044	1	1				DGT		
		1	5				DGT		
2									SEAL, Reverse Band
	06030910	2	1				DGT		
		2	5				DGT		
3									SHAFT, Band Lever
	02124857	1	1				DGT		
		1	5				DGT		
4									NUT, Hex, .42-20
	00271506	1	1				DGT		
		1	5				DGT		
5									LEVER, Reverse Band
	04617028AB	1	1				DGT		
		1	5				DGT		
6									STRUT, Reverse Band
	04471497AB	1	1				DGT		
		1	5				DGT		
7									BAND, Reverse
	04471476AB	1	1				DGT		
		1	5				DGT		
8									LEVER, Reverse Band
	04617014AB	1	1				DGT		
		1	5				DGT		
9									SCREW, Trans Reverse Band Adjusting, .437-20x1.5
	01942141	1	1				DGT		
		1	5				DGT		
10									LEVER, Kickdown
	52118264	1	1				DGT		

DAKOTA (AN)

SERIES	LINE	BODY	ENGINE	TRANSMISSION
L = Quad Cab L = Regular Cab L = Club Cab	1 = Dakota 2WD 5 = Dakota 4WD	31 = CLUB CAB 2-DR 6.5 FT BOX 61 = REG CAB 6.5 FT BOX 84 = CREW CAB 4-DR W.B.1	EPO = 2.5L 4 Cyl. EHO = 3.9L 6 Cyl. EMO = 5.9L 8 Cyl. EVO = 4.7L Magnum EHC = 3.9L SMPI V6 EML = 5.9L V8 MPI Engine EPE = 2.5L POWER TECH I-4 Cyl. EVA = 4.7L V8 MPI	DDC = TRANSMISSION - 5-SPEED HD MANUAL DG4 = TRANSMISSION-MULTI-SPEED AUTO, 45RFE DGK = TRANSMISSION - 4-SPD. AUTOMATIC,42RE DGT = TRANSMISSION - 4-SPD. AUTOMATIC,46RE DGO = AUTO. TRANS.

Bands [46 RE] [DGT]
Figure 46RE-515

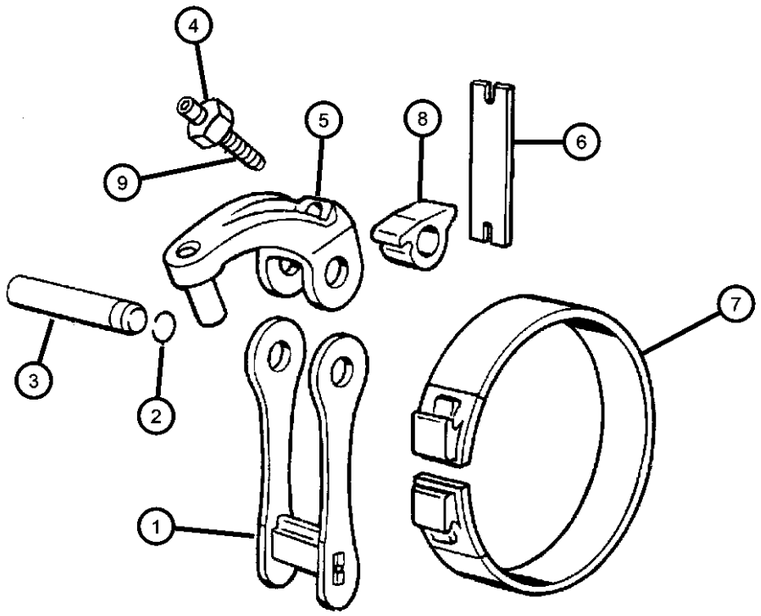

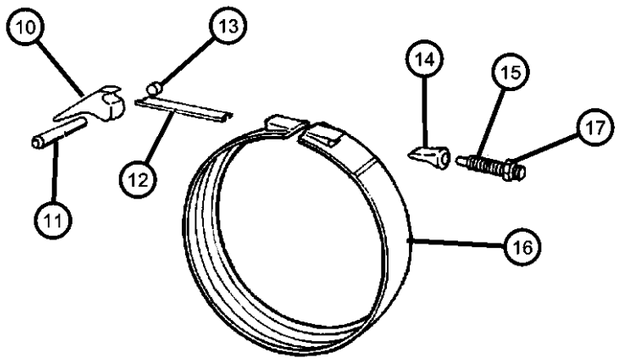

ITEM	PART NUMBER	QTY	LINE	SERIES	BODY	ENGINE	TRANS	TRIM	DESCRIPTION
		1	5				DGT		
11									SHAFT, Band Lever
	04531181	1	1				DGT		
		1	5				DGT		
12									STRUT, Kickdown Band
	02124848	1	1				DGT		
		1	5				DGT		
13		1							PLUG, Shaft Lever, (NOT SERVICED)
14									ANCHOR, Kickdown Band
	03743338	1	1				DGT		
		1	5				DGT		
15									SCREW
	06036115AA	1	1				DGT		
		1	5				DGT		
16									BAND, Kickdown
	04329853	1	1				DGT		
		1	5				DGT		
17									NUT, Hex Jam, .50-20
	00124934	1	1				DGT		
		1	5				DGT		

DAKOTA (AN)

SERIES	LINE	BODY	ENGINE	TRANSMISSION
L = Quad Cab	1 = Dakota 2WD	31 = CLUB CAB 2-DR 6.5 FT BOX	EPO = 2.5L 4 Cyl.	DDC = TRANSMISSION - 5-SPEED HD MANUAL
L = Regular Cab	5 = Dakota 4WD	61 = REG CAB 6.5 FT BOX	EHO = 3.9L 6 Cyl.	DG4 = TRANSMISSION-MULTI-SPEED AUTO, 45RFE
L = Club Cab		84 = CREW CAB 4-DR W.B.1	EMO = 5.9L 8 Cyl.	DGK = TRANSMISSION - 4-SPD. AUTOMATIC,42RE
			EVO = 4.7L Magnum	DGT = TRANSMISSION - 4-SPD. AUTOMATIC,46RE
			EHC = 3.9L SMPI V6	DGO = AUTO. TRANS.
			EML = 5.9L V8 MPI Engine	
			EPE = 2.5L POWER TECH I-4 Cyl.	
			EVA = 4.7L V8 MPI	

AR = use ase required - = Non illustrrated part

Valve Body [46 RE] [DGT]
Figure 46RE-710

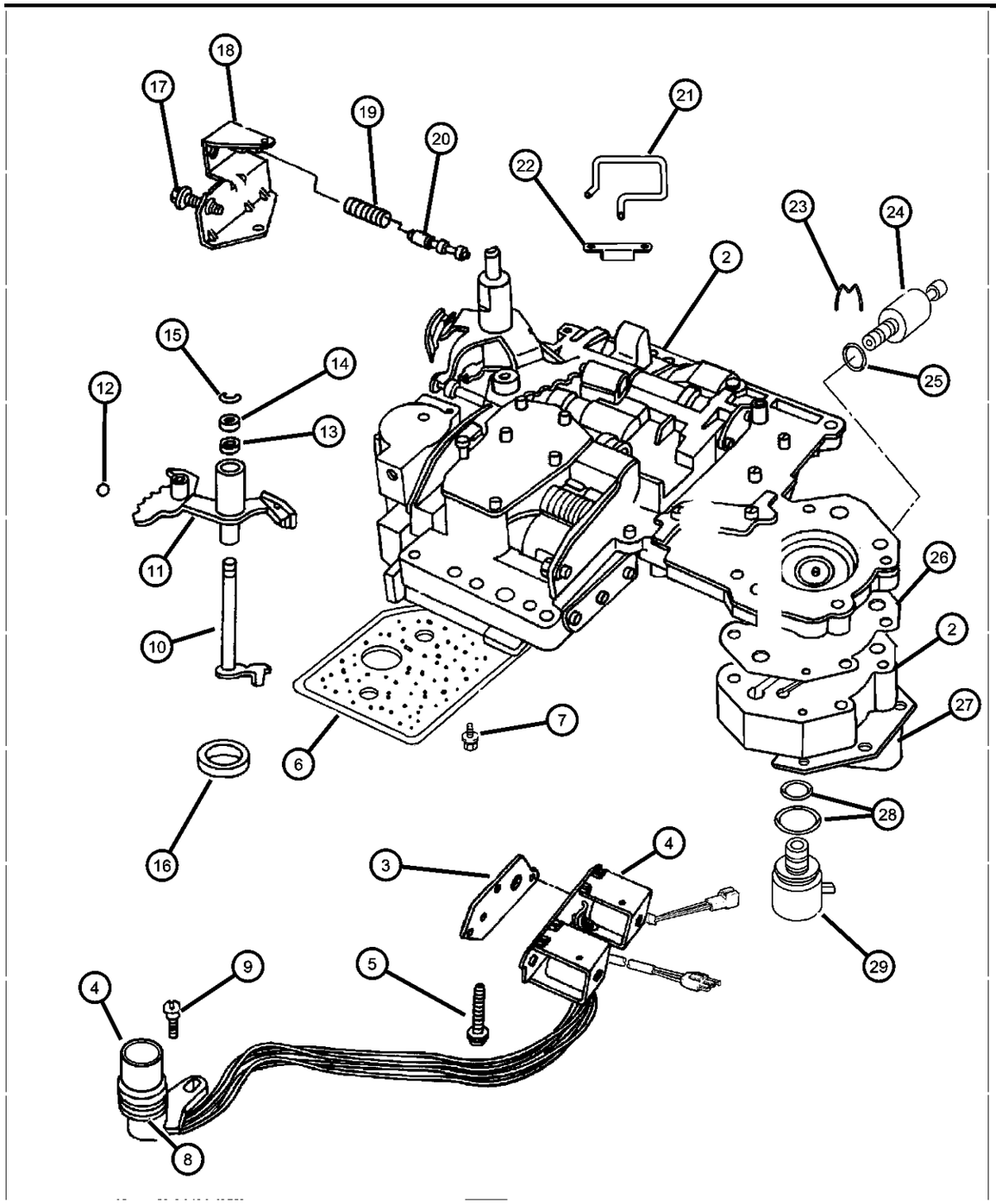

ITEM	PART NUMBER	QTY	LINE	SERIES	BODY	ENGINE	TRANS	TRIM	DESCRIPTION
NOTES:									
Sales Codes:									
EML = 5.9L SMPI MAGNUM V8 Engine									
-1									SEAL AND GASKET PACKAGE, Valve Body and Servo
	04863892AC	1	1				DGT		
		1	5				DGT		
2									VALVE BODY ASSEMBLY
	52118793AB	1	1				DGT		
		1	5				DGT		
3									GASKET PACKAGE, Transmission Solenoid
	04886333AA	1	1				DGT		
		1	5				DGT		
4									SOLENOID, Transmission Overdrive
	52118500AB	1	1				DGT		
		1	5				DGT		
5									BOLT, Valve Body, .25-20x1.75
	00181071	3	1				DGT		
		3	5				DGT		
6									FILTER, Valve Body
	52118789	1	1				DGT		
		1	5				DGT		
7									SCREW AND WASHER, Oil Filter Mounting, Fillester Head .190-24x2.500
	06033826	3	1				DGT		
		3	5				DGT		
8									O RING, Solenoid Wiring, Transmission
	06034748	2	1				DGT		
		2	5				DGT		
9									SCREW, Tapping, .19-24x.75
	06033985	1	1				DGT		
		1	5				DGT		

DAKOTA (AN)

SERIES	LINE	BODY	ENGINE	TRANSMISSION
L = Quad Cab	1 = Dakota 2WD	31 = CLUB CAB 2-DR 6.5 FT BOX	EPO = 2.5L 4 Cyl.	DDC = TRANSMISSION - 5-SPEED HD MANUAL
L = Regular Cab	5 = Dakota 4WD	61 = REG CAB 6.5 FT BOX	EHO = 3.9L 6 Cyl.	DG4 = TRANSMISSION-MULTI-SPEED AUTO, 45RFE
L = Club Cab		84 = CREW CAB 4-DR W.B.1	EMO = 5.9L 8 Cyl.	DGK = TRANSMISSION - 4-SPD. AUTOMATIC,42RE
			EVO = 4.7L Magnum	DGT = TRANSMISSION - 4-SPD. AUTOMATIC,46RE
			EHC = 3.9L SMPI V6	DGO = AUTO. TRANS.
			EML = 5.9L V8 MPI Engine	
			EPE = 2.5L POWER TECH I-4 Cyl.	
			EVA = 4.7L V8 MPI	

Valve Body [46 RE] [DGT]
Figure 46RE-710

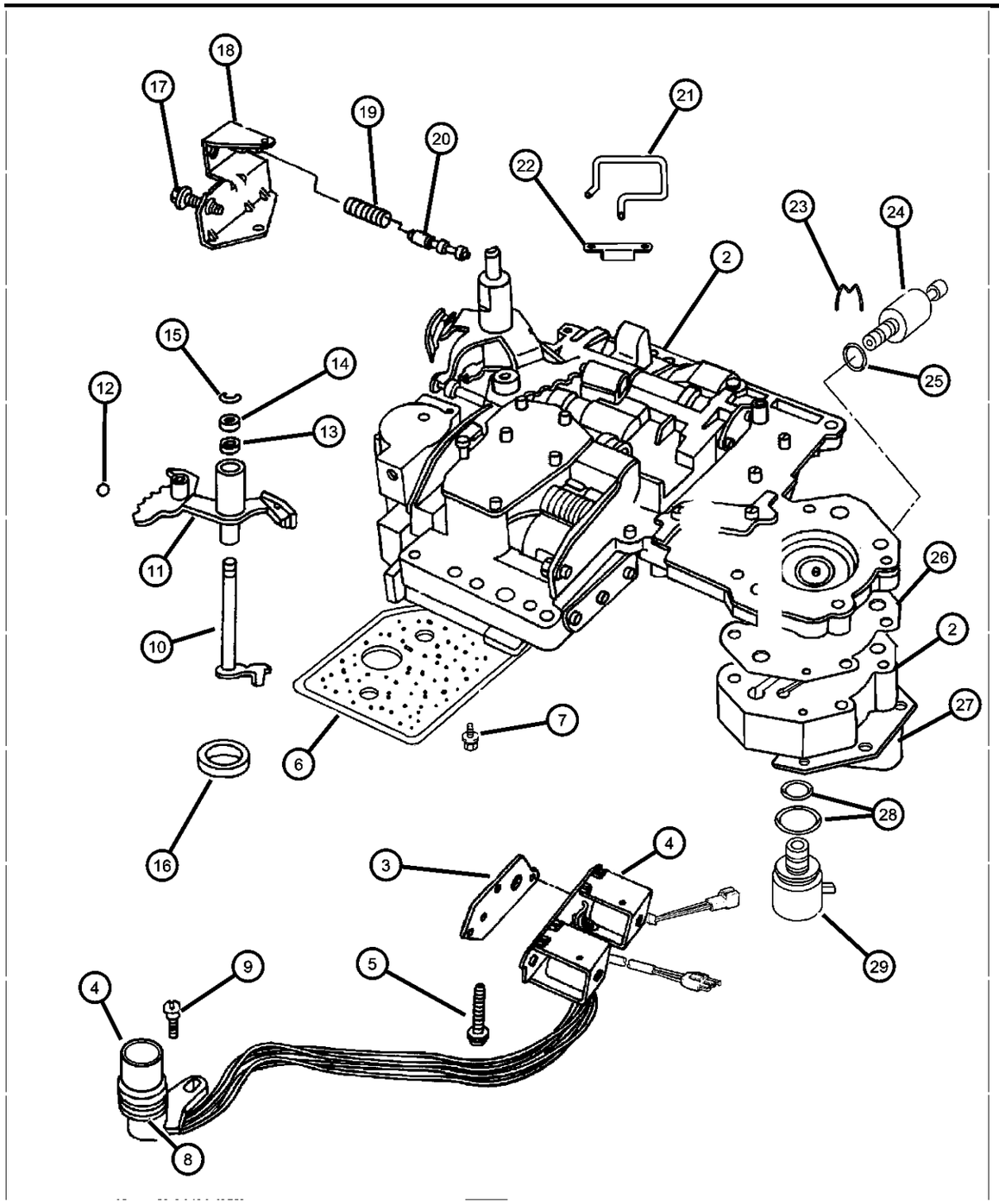

ITEM	PART NUMBER	QTY	LINE	SERIES	BODY	ENGINE	TRANS	TRIM	DESCRIPTION
10									LEVER, Throttle Valve
	03681227	1	1				DGT		
		1	5				DGT		
11									LEVER, Manual Valve
	04617439	1	1				DGT		
		1	5				DGT		
12									BALL, Manual Lever Detent, .343 Diameter
	00147488	1	1				DGT		
		4	5				DGT		
13									SEAL, Valve Lever Shift
	02466548	1	1				DGT		
		1	5				DGT		
14									WASHER, Manual Valve Lever
	02538062	1	1				DGT		
		1	5				DGT		
15									SNAP RING
	06035208	1	1				DGT		
		1	5				DGT		
16									SEAL, Manual Shift Valve, 1.25 OD
	04505098	1	1				DGT		
		1	5				DGT		
17									SCREW, Cap Head Lock, .312-24x1.25
	06030609	1	1				DGT		
		1	5				DGT		
18									BRACKET, Valve Body Switch
	04617010	1	1				DGT		
		1	5				DGT		
19									SPRING, Switch Valve
	04130492	1	1				DGT		
		1	5				DGT		
20									VALVE, Trans Lockup Switch

DAKOTA (AN)

SERIES	LINE	BODY	ENGINE	TRANSMISSION
L = Quad Cab L = Regular Cab L = Club Cab	1 = Dakota 2WD 5 = Dakota 4WD	31 = CLUB CAB 2-DR 6.5 FT BOX 61 = REG CAB 6.5 FT BOX 84 = CREW CAB 4-DR W.B.1	EPO = 2.5L 4 Cyl. EHO = 3.9L 6 Cyl. EMO = 5.9L 8 Cyl. EVO = 4.7L Magnum EHC = 3.9L SMPI V6 EML = 5.9L V8 MPI Engine EPE = 2.5L POWER TECH I-4 Cyl. EVA = 4.7L V8 MPI	DDC = TRANSMISSION - 5-SPEED HD MANUAL DG4 = TRANSMISSION-MULTI-SPEED AUTO, 45RFE DGK = TRANSMISSION - 4-SPD. AUTOMATIC,42RE DGT = TRANSMISSION - 4-SPD. AUTOMATIC,46RE DGO = AUTO. TRANS.

Valve Body [46 RE] [DGT]
Figure 46RE-710

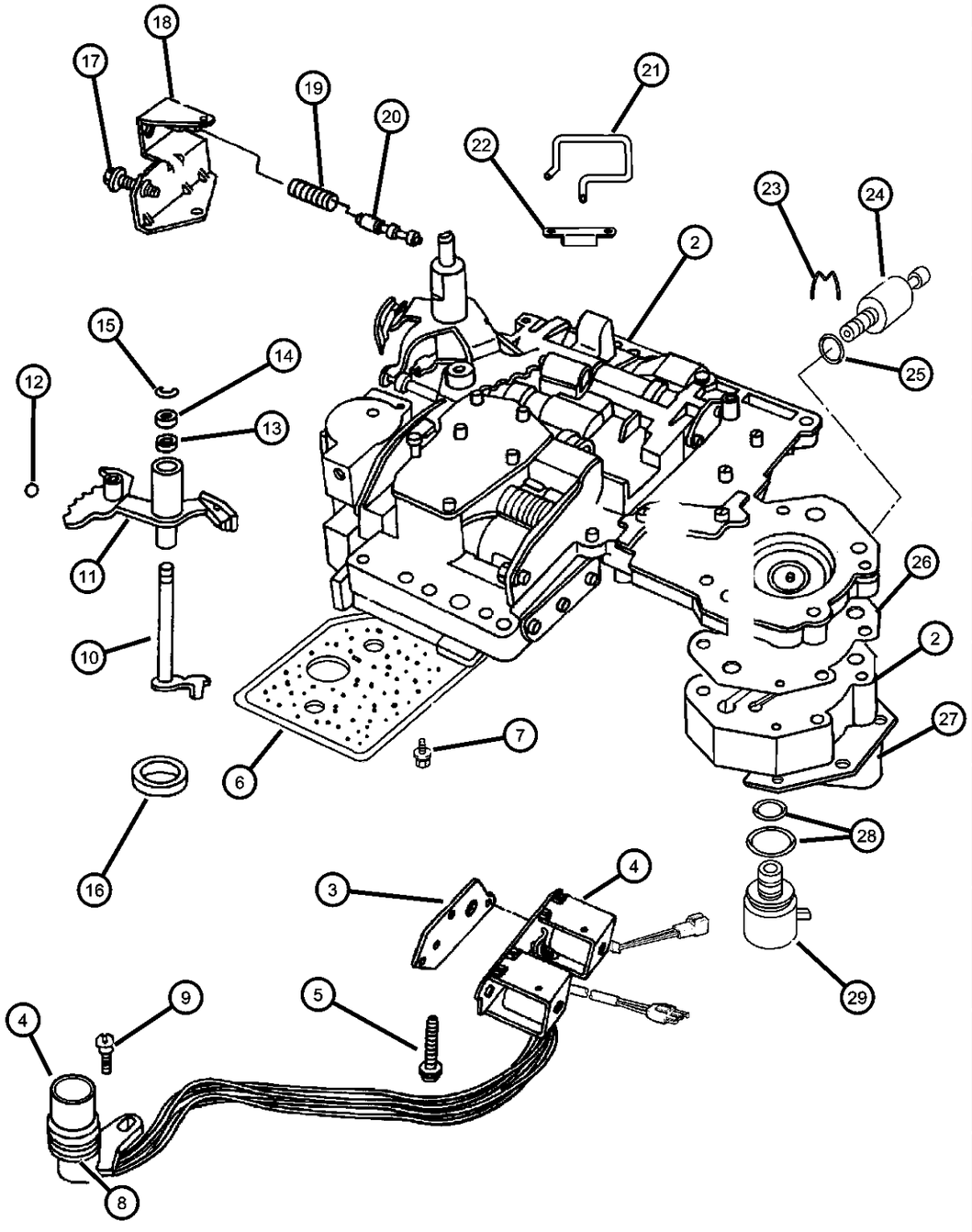

ITEM	PART NUMBER	QTY	LINE	SERIES	BODY	ENGINE	TRANS	TRIM	DESCRIPTION
	04505036	1	1				DGT		
		1	5				DGT		
21									TUBE, Boost Valve
	04617008	1	1				DGT		
		1	5				DGT		
22									RETAINER, Boost Valve Oil Supply Tube
	52117958	1	1				DGT		
		1	5				DGT		
23									CLIP, Transmission Governor Transducer
	04617219	1	1				DGT		
		1	5				DGT		
24									TRANSDUCER, Pressure Sensor
	56028196AA	1	1				DGT		
		1	5				DGT		
25		1							O RING, (NOT SERVICED)
26									GASKET, Transmission Solenoid
	04617216	1	1				DGT		
		1	5				DGT		
27									RETAINER, Transmission Governor Solenoid
	04617211AB	1	1				DGT		
		1	5				DGT		
28									O RING PACKAGE, Valve Body, Transmission
	04723549	1	1				DGT		
		1	5				DGT		
29									SOLENOID, Transmission Governor
	04617210	1	1				DGT		
		1	5				DGT		
-30									SCREEN, Transmission Regulator Valve

DAKOTA (AN)

SERIES	LINE	BODY	ENGINE	TRANSMISSION
L = Quad Cab L = Regular Cab L = Club Cab	1 = Dakota 2WD 5 = Dakota 4WD	31 = CLUB CAB 2-DR 6.5 FT BOX 61 = REG CAB 6.5 FT BOX 84 = CREW CAB 4-DR W.B.1	EPO = 2.5L 4 Cyl. EHO = 3.9L 6 Cyl. EMO = 5.9L 8 Cyl. EVO = 4.7L Magnum EHC = 3.9L SMPI V6 EML = 5.9L V8 MPI Engine EPE = 2.5L POWER TECH I-4 Cyl. EVA = 4.7L V8 MPI	DDC = TRANSMISSION - 5-SPEED HD MANUAL DG4 = TRANSMISSION-MULTI-SPEED AUTO, 45RFE DGK = TRANSMISSION - 4-SPD. AUTOMATIC,42RE DGT = TRANSMISSION - 4-SPD. AUTOMATIC,46RE DGO = AUTO. TRANS.

AR = use ase required - = Non illustrrated part

Valve Body [46 RE] [DGT]
Figure 46RE-710

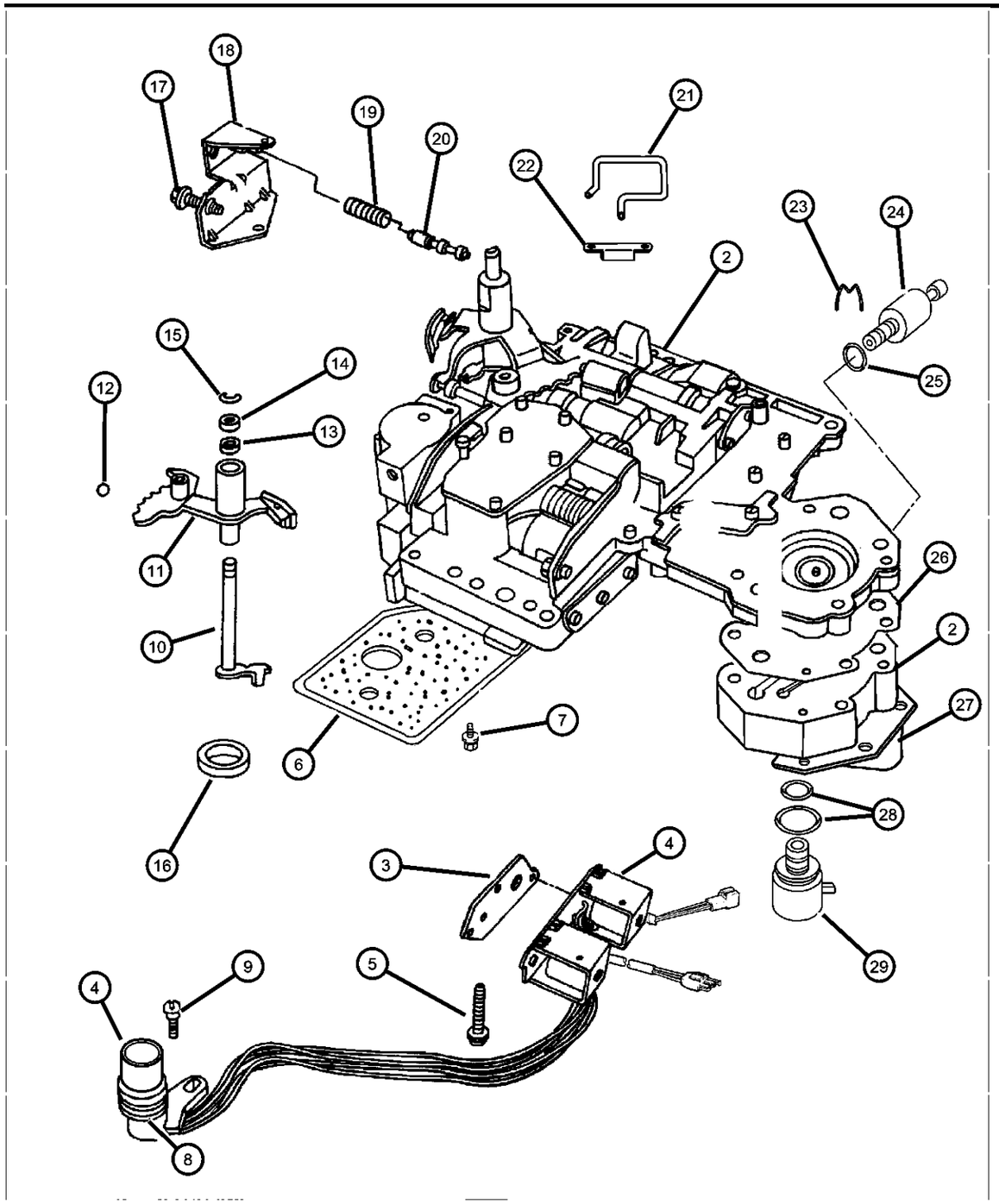

ITEM	PART NUMBER	QTY	LINE	SERIES	BODY	ENGINE	TRANS	TRIM	DESCRIPTION
	03878313	1	1				DGT		
		1	5				DGT		

DAKOTA (AN)

SERIES	LINE	BODY	ENGINE	TRANSMISSION
L = Quad Cab L = Regular Cab L = Club Cab	1 = Dakota 2WD 5 = Dakota 4WD	31 = CLUB CAB 2-DR 6.5 FT BOX 61 = REG CAB 6.5 FT BOX 84 = CREW CAB 4-DR W.B.1	EPO = 2.5L 4 Cyl. EHO = 3.9L 6 Cyl. EMO = 5.9L 8 Cyl. EVO = 4.7L Magnum EHC = 3.9L SMPI V6 EML = 5.9L V8 MPI Engine EPE = 2.5L POWER TECH I-4 Cyl. EVA = 4.7L V8 MPI	DDC = TRANSMISSION - 5-SPEED HD MANUAL DG4 = TRANSMISSION-MULTI-SPEED AUTO, 45RFE DGK = TRANSMISSION - 4-SPD. AUTOMATIC,42RE DGT = TRANSMISSION - 4-SPD. AUTOMATIC,46RE DGO = AUTO. TRANS.

Servo [46 RE] [DGT]
Figure 46RE-725

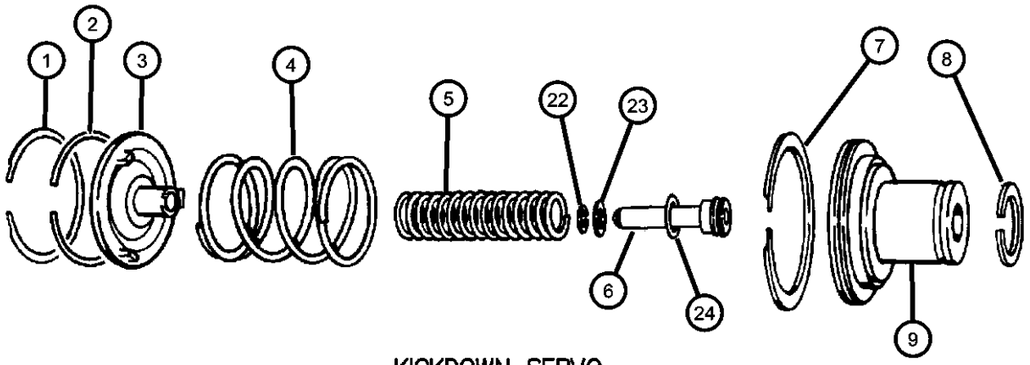

KICKDOWN SERVO

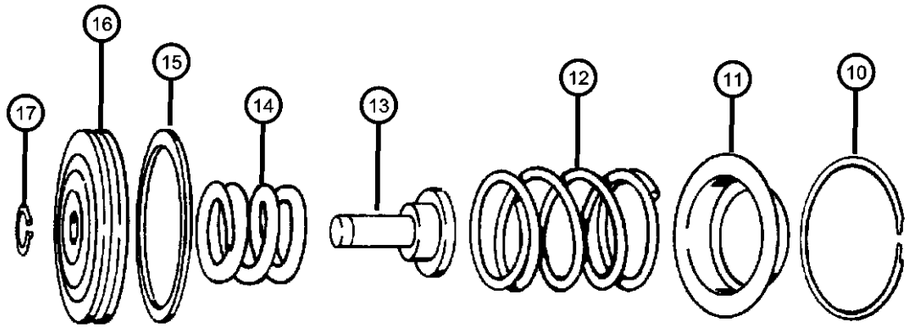

LOW AND REVERSE SERVO

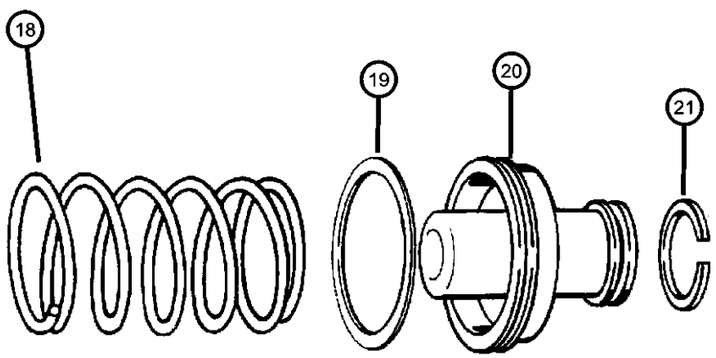

ITEM	PART NUMBER	QTY	LINE	SERIES	BODY	ENGINE	TRANS	TRIM	DESCRIPTION
NOTES:									
Sales Codes:									
EML = 5.9L SMPI MAGNUM V8 Engine									
1									SNAP RING
	01942130	1	1				DGT		
		1	5				DGT		
2									SEAL, Servo Piston
	01942123	1	1				DGT		
		1	5				DGT		
3									GUIDE, Kickdown Servo
	03410441	1	1				DGT		
		1	5				DGT		
4									SPRING, Kickdown Servo Piston
	04617528	1	1				DGT		
		1	5				DGT		
5									SPRING, Kickdown Servo Piston
	03410444	1	1				DGT		
		1	5				DGT		
6									PISTON, Kickdown Servo
	03410445	1	1				DGT		
		1	5				DGT		
7									SEAL, Servo Piston
	01942123	1	1				DGT		
		1	5				DGT		
8									SEAL, Kickdown Servo
	04412444	1	1				DGT		
		1	5				DGT		
9									PISTON, Kickdown Servo
	03410440	1	1				DGT		
		1	5				DGT		
10									SNAP RING
	01942130	1	1				DGT		
		1	5				DGT		

DAKOTA (AN)

SERIES	LINE	BODY	ENGINE	TRANSMISSION
L = Quad Cab L = Regular Cab L = Club Cab	1 = Dakota 2WD 5 = Dakota 4WD	31 = CLUB CAB 2-DR 6.5 FT BOX 61 = REG CAB 6.5 FT BOX 84 = CREW CAB 4-DR W.B.1	EPO = 2.5L 4 Cyl. EHO = 3.9L 6 Cyl. EMO = 5.9L 8 Cyl. EVO = 4.7L Magnum EHC = 3.9L SMPI V6 EML = 5.9L V8 MPI Engine EPE = 2.5L POWER TECH I-4 Cyl. EVA = 4.7L V8 MPI	DDC = TRANSMISSION - 5-SPEED HD MANUAL DG4 = TRANSMISSION-MULTI-SPEED AUTO, 45RFE DGK = TRANSMISSION - 4-SPD. AUTOMATIC,42RE DGT = TRANSMISSION - 4-SPD. AUTOMATIC,46RE DGO = AUTO. TRANS.

AR = use ase required - = Non illustrrated part

Servo [46 RE] [DGT]
Figure 46RE-725

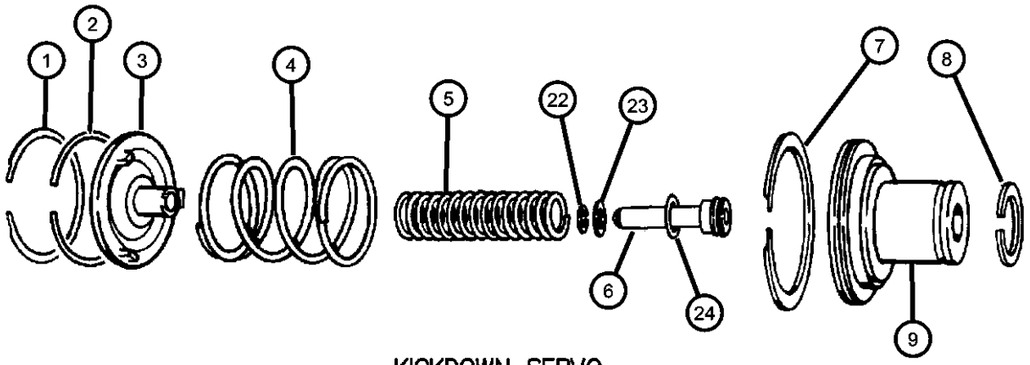

KICKDOWN SERVO

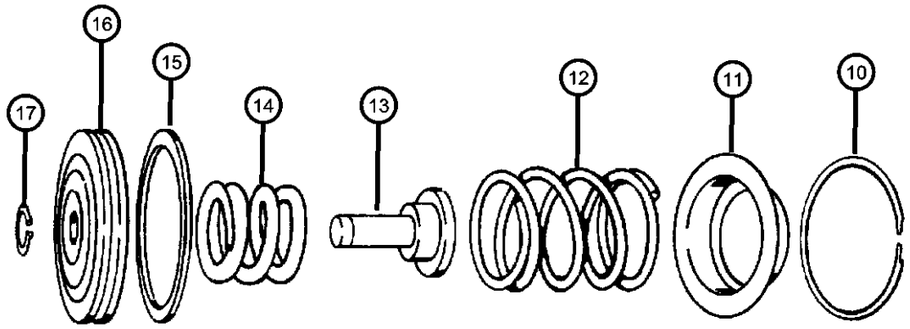

LOW AND REVERSE SERVO

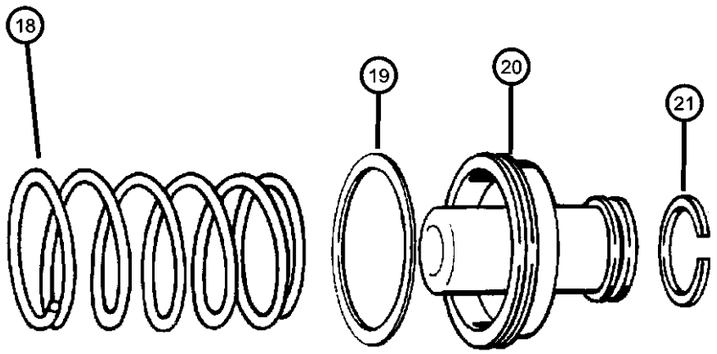

ITEM	PART NUMBER	QTY	LINE	SERIES	BODY	ENGINE	TRANS	TRIM	DESCRIPTION
11									RETAINER, Transmission Reverse Servo Piston Spring
	01942150	1	1				DGT		
		1	5				DGT		
12									SPRING, Reverse Servo Piston
	02801241	1	1				DGT		
		1	5				DGT		
13									PLUG, Reverse Servo Piston
	52118740AB	1	1				DGT		
		1	5				DGT		
14									SPRING, Reverse Servo Piston
	52118759AB	1	1				DGT		
		1	5				DGT		
15									SEAL, Piston Reverse Servo, Rubber
	04058741	1	1				DGT		
		1	5				DGT		
16									PISTON, Reverse Servo
	02801281	1	1				DGT		
		1	5				DGT		
17									SNAP RING, .435 ID
	06027153	1	1				DGT		
		1	5				DGT		
18									SPRING, Accumulator Piston
	03515079	1	1				DGT		
		1	5				DGT		
19									SEAL, Piston Accumulator
	03743013	1	1				DGT		
		1	5				DGT		
20									PISTON, Accumulator
	03743650	1	1				DGT		
		1	5				DGT		
21									SEAL, Piston Accumulator

DAKOTA (AN)

SERIES	LINE	BODY	ENGINE	TRANSMISSION
L = Quad Cab L = Regular Cab L = Club Cab	1 = Dakota 2WD 5 = Dakota 4WD	31 = CLUB CAB 2-DR 6.5 FT BOX 61 = REG CAB 6.5 FT BOX 84 = CREW CAB 4-DR W.B.1	EPO = 2.5L 4 Cyl. EHO = 3.9L 6 Cyl. EMO = 5.9L 8 Cyl. EVO = 4.7L Magnum EHC = 3.9L SMPI V6 EML = 5.9L V8 MPI Engine EPE = 2.5L POWER TECH I-4 Cyl. EVA = 4.7L V8 MPI	DDC = TRANSMISSION - 5-SPEED HD MANUAL DG4 = TRANSMISSION-MULTI-SPEED AUTO, 45RFE DGK = TRANSMISSION - 4-SPD. AUTOMATIC,42RE DGT = TRANSMISSION - 4-SPD. AUTOMATIC,46RE DGO = AUTO. TRANS.

Servo [46 RE] [DGT]
Figure 46RE-725

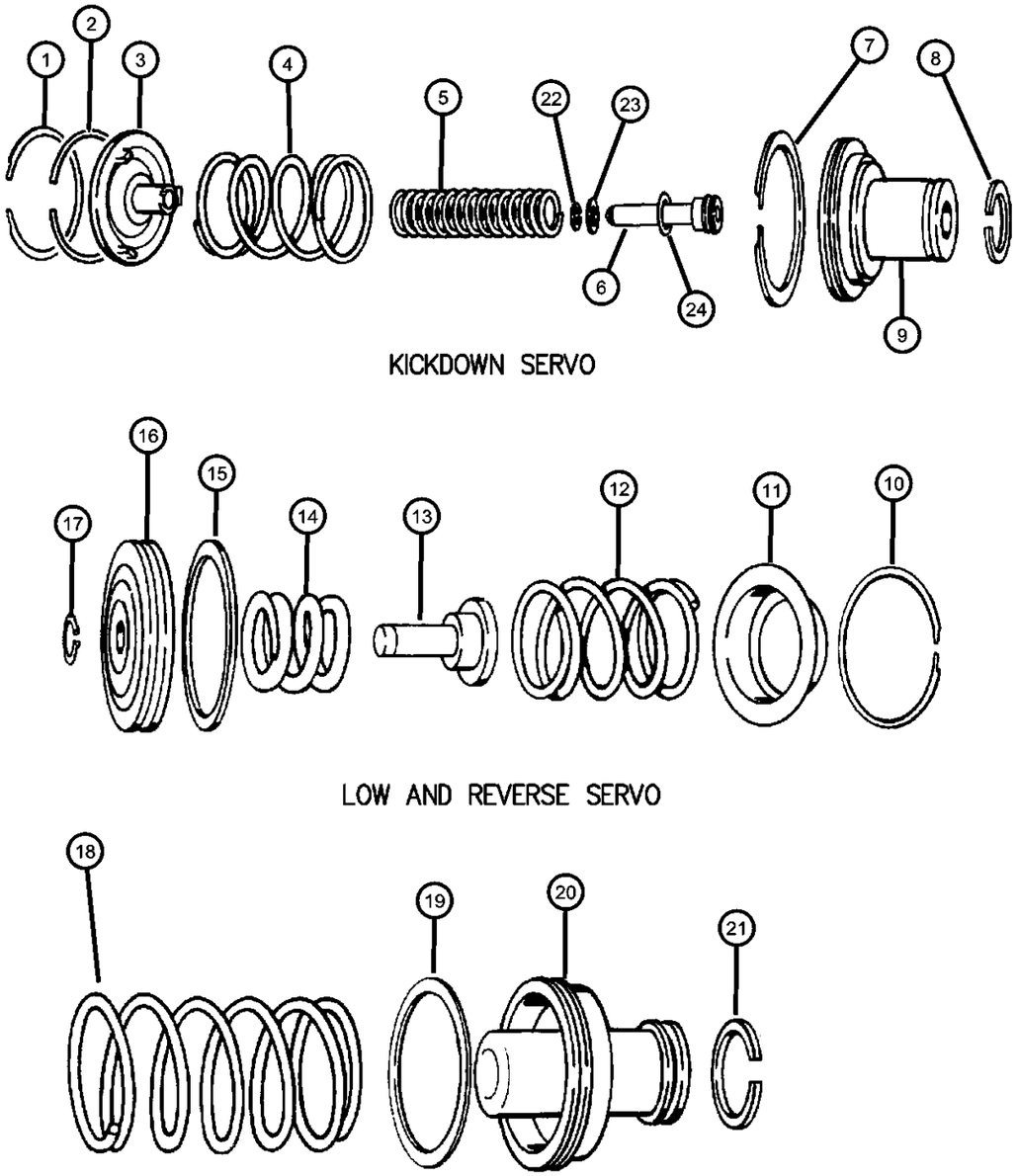

ITEM	PART NUMBER	QTY	LINE	SERIES	BODY	ENGINE	TRANS	TRIM	DESCRIPTION
	03743010	1	1				DGT		
		1	5				DGT		
22									SNAP RING, Brake Master Cylinder
	06031392	1	1				DGT		
		1	5				DGT		
23									RETAINER, Kick Down
	03410437	1	1				DGT		
		1	5				DGT		
24									O RING, Kick Down Servo
	06028864	1	1				DGT		
		1	5				DGT		

DAKOTA (AN)

SERIES	LINE	BODY	ENGINE	TRANSMISSION
L = Quad Cab L = Regular Cab L = Club Cab	1 = Dakota 2WD 5 = Dakota 4WD	31 = CLUB CAB 2-DR 6.5 FT BOX 61 = REG CAB 6.5 FT BOX 84 = CREW CAB 4-DR W.B.1	EPO = 2.5L 4 Cyl. EHO = 3.9L 6 Cyl. EMO = 5.9L 8 Cyl. EVO = 4.7L Magnum EHC = 3.9L SMPI V6 EML = 5.9L V8 MPI Engine EPE = 2.5L POWER TECH I-4 Cyl. EVA = 4.7L V8 MPI	DDC = TRANSMISSION - 5-SPEED HD MANUAL DG4 = TRANSMISSION-MULTI-SPEED AUTO, 45RFE DGK = TRANSMISSION - 4-SPD. AUTOMATIC,42RE DGT = TRANSMISSION - 4-SPD. AUTOMATIC,46RE DGO = AUTO. TRANS.

Parking Sprag [46 RE] [DGT]
Figure 46RE-730

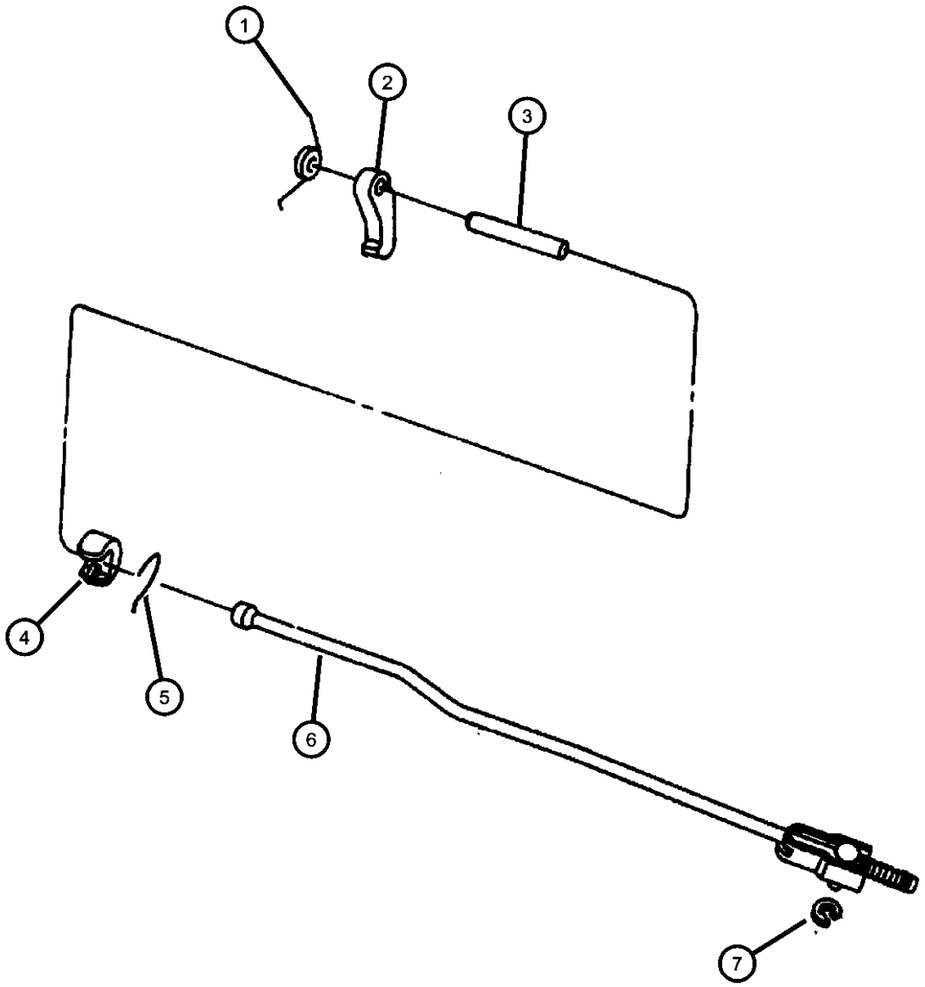

ITEM	PART NUMBER	QTY	LINE	SERIES	BODY	ENGINE	TRANS	TRIM	DESCRIPTION
NOTES:									
Sales Codes:									
EML = 5.9L SMPI MAGNUM V8 Engine									
1									SPRING, Parking Sprag
	02466909	1	1				DGT		
		1	5				DGT		
2									SPRAG, Transmission Parking
	04471415	1	1				DGT		
		1	5				DGT		
3									SHAFT, Parking Sprag
	02466892	1	1				DGT		
		1	5				DGT		
4									PLUG, Parking Sprag
	02538042	1	1				DGT		
		1	5				DGT		
5									SNAP RING, Transmission
	02538034	1	1				DGT		
		1	5				DGT		
6									ROD, Parking Sprag
	04471478	1	1				DGT		
		1	5				DGT		
7									SNAP RING, Rod
	06035256	1	1				DGT		
		1	5				DGT		

DAKOTA (AN)

SERIES	LINE	BODY	ENGINE	TRANSMISSION
L = Quad Cab L = Regular Cab L = Club Cab	1 = Dakota 2WD 5 = Dakota 4WD	31 = CLUB CAB 2-DR 6.5 FT BOX 61 = REG CAB 6.5 FT BOX 84 = CREW CAB 4-DR W.B.1	EPO = 2.5L 4 Cyl. EHO = 3.9L 6 Cyl. EMO = 5.9L 8 Cyl. EVO = 4.7L Magnum EHC = 3.9L SMPI V6 EML = 5.9L V8 MPI Engine EPE = 2.5L POWER TECH I-4 Cyl. EVA = 4.7L V8 MPI	DDC = TRANSMISSION - 5-SPEED HD MANUAL DG4 = TRANSMISSION-MULTI-SPEED AUTO, 45RFE DGK = TRANSMISSION - 4-SPD. AUTOMATIC,42RE DGT = TRANSMISSION - 4-SPD. AUTOMATIC,46RE DGO = AUTO. TRANS.

Clutch [46 RE] [DGT]
Figure 46RE-1010

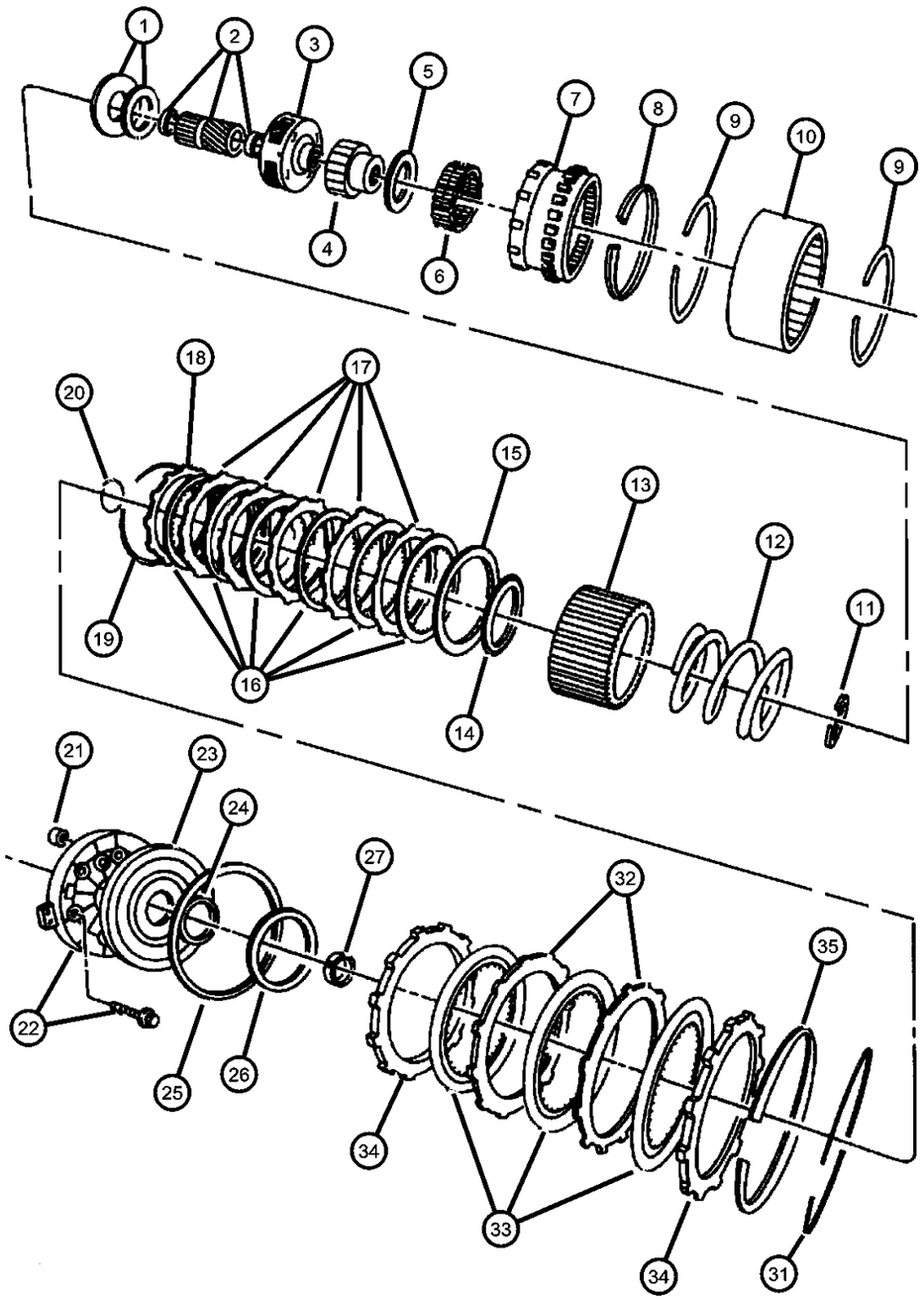

ITEM	PART NUMBER	QTY	LINE	SERIES	BODY	ENGINE	TRANS	TRIM	DESCRIPTION
NOTES:									
Sales Codes:									
EML = 5.9L SMPI MAGNUM V8 Engine									
1									PLATE PACKAGE, Transmission Module
	04740774	1	1				DGT		
		1	5				DGT		
2									GEAR, Overdrive Sun
	05015107AA	1	5				DGT		
		1	1				DGT		
3									CARRIER, O/Drive Planet Pinion
	04798520	1	1				DGT		
		1	5				DGT		
4									RACE, Overrunning Clutch
	04461124	1	1				DGT		
		1	5				DGT		
5									THRUST BEARING, Ovedrive Third Position
	04461014	1	1				DGT		
		1	5				DGT		
6									CLUTCH, Overdrive Overrunning
	04461015	1	1				DGT		
		1	5				DGT		
7									GEAR, Overdrive Annulus
	04761010	1	1				DGT		
		1	5				DGT		
8									SNAP RING, 5.25 OD
	04461059	1	1				DGT		
		1	5				DGT		
9									SNAP RING, 6.00 OD
	04461060	2	1				DGT		
		2	5				DGT		
10									DRUM, Automatic Transmission
	04461089	1	1				DGT		

DAKOTA (AN)

SERIES	LINE	BODY	ENGINE	TRANSMISSION
L = Quad Cab	1 = Dakota 2WD	31 = CLUB CAB 2-DR 6.5 FT BOX	EPO = 2.5L 4 Cyl.	DDC = TRANSMISSION - 5-SPEED HD MANUAL
L = Regular Cab	5 = Dakota 4WD	61 = REG CAB 6.5 FT BOX	EHO = 3.9L 6 Cyl.	DG4 = TRANSMISSION-MULTI-SPEED AUTO, 45RFE
L = Club Cab		84 = CREW CAB 4-DR W.B.1	EMO = 5.9L 8 Cyl.	DGK = TRANSMISSION - 4-SPD. AUTOMATIC,42RE
			EVO = 4.7L Magnum	DGT = TRANSMISSION - 4-SPD. AUTOMATIC,46RE
			EHC = 3.9L SMPI V6	DGO = AUTO. TRANS.
			EML = 5.9L V8 MPI Engine	
			EPE = 2.5L POWER TECH I-4 Cyl.	
			EVA = 4.7L V8 MPI	

Clutch [46 RE] [DGT]
Figure 46RE-1010

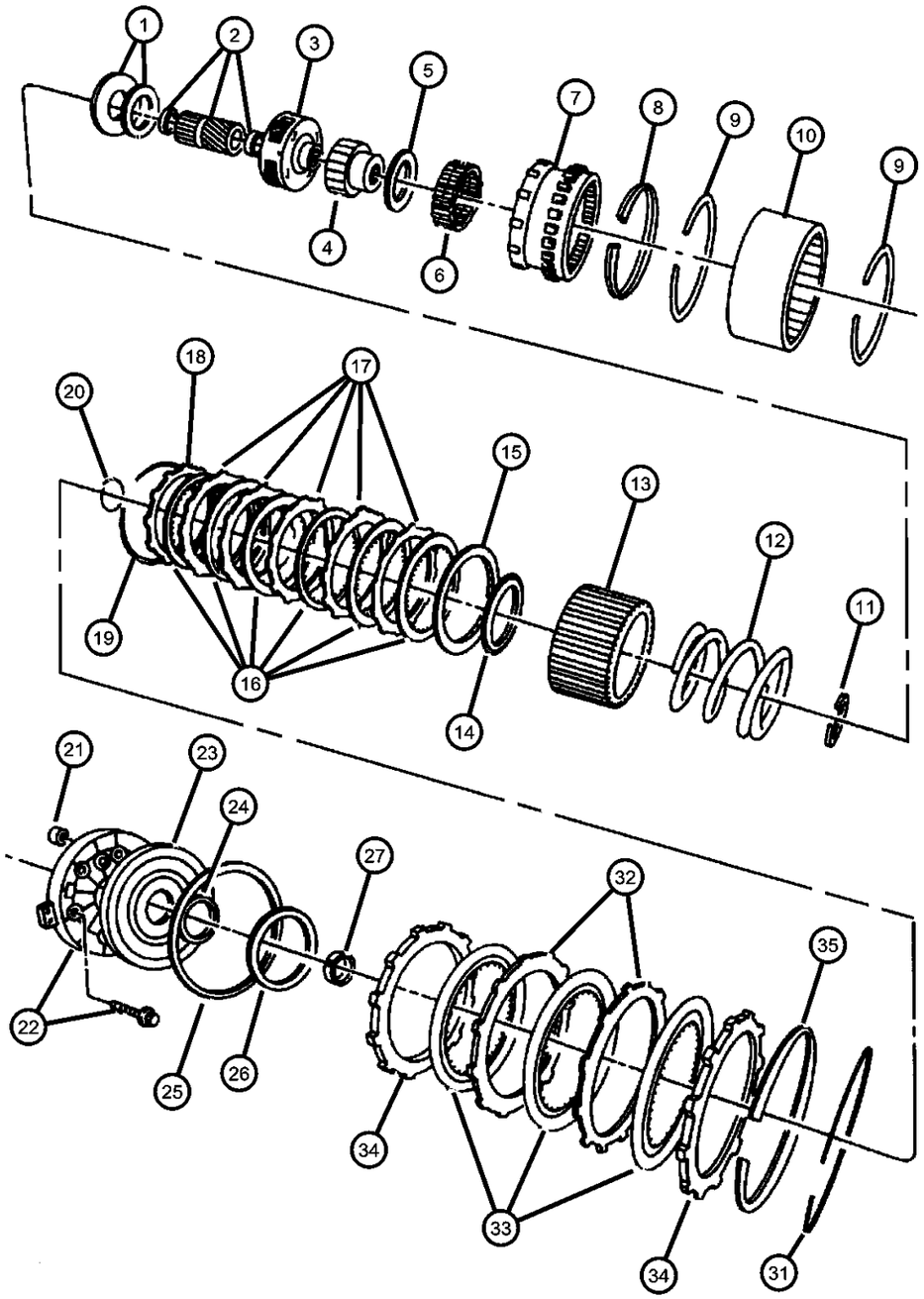

ITEM	PART NUMBER	QTY	LINE	SERIES	BODY	ENGINE	TRANS	TRIM	DESCRIPTION
		1	5				DGT		
11									SNAP RING, 2.1875 OD
	04461063	1	1				DGT		
		1	5				DGT		
12									SPRING, Direct Clutch
	04461027	1	1				DGT		
		1	5				DGT		
13									HUB, Direct Clutch
	04461072	AR	1				DGT		
		1	5				DGT		
14									THRUST BEARING, Overdrive
	04446724	1	1				DGT		
		1	5				DGT		
15									PLATE, Transmission Clutch Reaction
	04461030	1	1				DGT		
		1	5				DGT		
16									DISC, Direct Clutch
	04461042	8	1				DGT		
		8	5				DGT		
17									PLATE, Transmission Clutch Reaction
	04461054	7	1				DGT		
		7	5				DGT		
18									PLATE, Transmission Clutch Reaction
	04461031	1	1				DGT		
		1	5				DGT		
19									SPRING, Direct Clutch
	04461032	1	1				DGT		
		1	5				DGT		
20									SNAP RING, 1.875" OD
	04461064	1	1				DGT		

DAKOTA (AN)

SERIES	LINE	BODY	ENGINE	TRANSMISSION
L = Quad Cab L = Regular Cab L = Club Cab	1 = Dakota 2WD 5 = Dakota 4WD	31 = CLUB CAB 2-DR 6.5 FT BOX 61 = REG CAB 6.5 FT BOX 84 = CREW CAB 4-DR W.B.1	EPO = 2.5L 4 Cyl. EHO = 3.9L 6 Cyl. EMO = 5.9L 8 Cyl. EVO = 4.7L Magnum EHC = 3.9L SMPI V6 EML = 5.9L V8 MPI Engine EPE = 2.5L POWER TECH I-4 Cyl. EVA = 4.7L V8 MPI	DDC = TRANSMISSION - 5-SPEED HD MANUAL DG4 = TRANSMISSION-MULTI-SPEED AUTO, 45RFE DGK = TRANSMISSION - 4-SPD. AUTOMATIC,42RE DGT = TRANSMISSION - 4-SPD. AUTOMATIC,46RE DGO = AUTO. TRANS.

AR = use ase required - = Non illustrrated part

Clutch [46 RE] [DGT]
Figure 46RE-1010

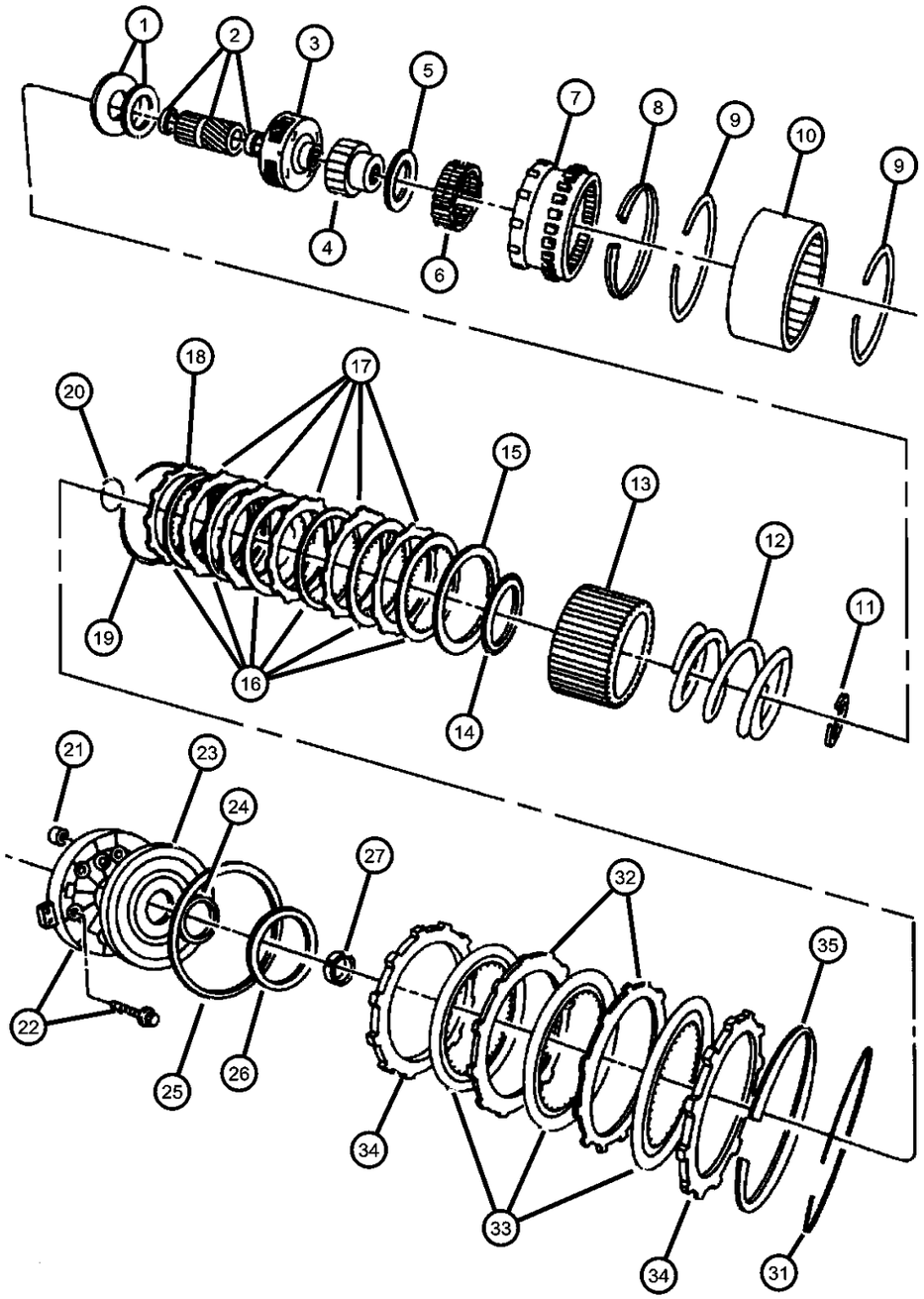

ITEM	PART NUMBER	QTY	LINE	SERIES	BODY	ENGINE	TRANS	TRIM	DESCRIPTION
		1	5				DGT		
21									FILTER, Overdrive Clutch
	04412583	1	1				DGT		
		1	5				DGT		
22									RETAINER, Transmission O/Drive Clutch Piston
	52117975	1	1				DGT		
		1	5				DGT		
23									PISTON, Overdrive Clutch
	52118599	1	1				DGT		
		1	5				DGT		
24									SEAL, Overdrive Clutch Piston
	04431696	1	1				DGT		
		1	5				DGT		
25									SEAL, Overdrive Clutch Piston
	04431696	1	1				DGT		
		1	5				DGT		
26									PLATE, Transmission O/Drive Clutch
	04431585	1	1				DGT		(.123‘ - .125‘) Thick
		1	5				DGT		(.123‘ - .125‘) Thick
	04431586	1	1				DGT		(.153‘ - .155‘) Thick
		1	5				DGT		(.153‘ - .155‘) Thick
	04431587	1	1				DGT		(.183‘ - .185‘) Thick
		1	5				DGT		(.183‘ - .185‘) Thick
	04431588	1	1				DGT		(.213‘ - .215‘) Thick
		1	5				DGT		(.213‘ - .215‘) Thick
	04431590	1	1				DGT		(.243‘ - .245‘) Thick
		1	5				DGT		(.243‘ - .245‘) Thick
	04431731	1	1				DGT		(.138‘ - .140‘) Thick
		1	5				DGT		(.138‘ - .140‘) Thick
	04431732	1	1				DGT		(.168‘ - .170‘) Thick
		1	5				DGT		(.168‘ - .170‘) Thick

DAKOTA (AN)

SERIES	LINE	BODY	ENGINE	TRANSMISSION
L = Quad Cab L = Regular Cab L = Club Cab	1 = Dakota 2WD 5 = Dakota 4WD	31 = CLUB CAB 2-DR 6.5 FT BOX 61 = REG CAB 6.5 FT BOX 84 = CREW CAB 4-DR W.B.1	EPO = 2.5L 4 Cyl. EHO = 3.9L 6 Cyl. EMO = 5.9L 8 Cyl. EVO = 4.7L Magnum EHC = 3.9L SMPI V6 EML = 5.9L V8 MPI Engine EPE = 2.5L POWER TECH I-4 Cyl. EVA = 4.7L V8 MPI	DDC = TRANSMISSION - 5-SPEED HD MANUAL DG4 = TRANSMISSION-MULTI-SPEED AUTO, 45RFE DGK = TRANSMISSION - 4-SPD. AUTOMATIC,42RE DGT = TRANSMISSION - 4-SPD. AUTOMATIC,46RE DGO = AUTO. TRANS.

Clutch [46 RE] [DGT]
Figure 46RE-1010

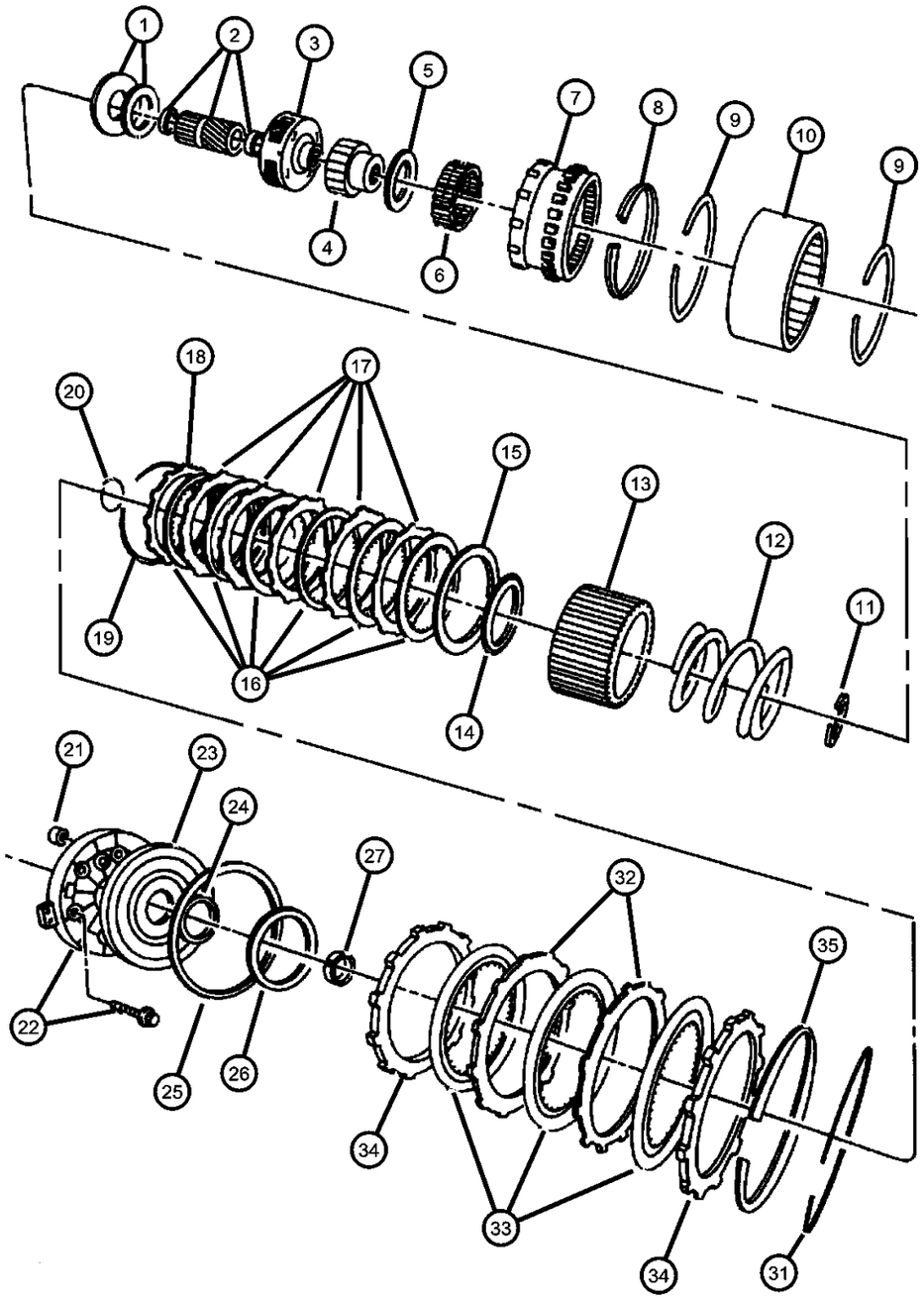

ITEM	PART NUMBER	QTY	LINE	SERIES	BODY	ENGINE	TRANS	TRIM	DESCRIPTION
	04431733	1	1				DGT		(.198‘ - .200‘) Thick
		1	5				DGT		(.198‘ - .200‘) Thick
	04431734	1	1				DGT		(.228‘ - .230‘) Thick
		1	5				DGT		(.228‘ - .230‘) Thick
	04431735	1	1				DGT		(.108‘ - .110‘) Thick
		1	5				DGT		(.108‘ - .110‘) Thick
27									SPACER, Intermediate Shaft, 1.58mm
	04431916	1	1				DGT		
		1	5				DGT		
-28									SPACER, Intermediate Shaft, .175
	04431917	1	1				DGT		
		1	5				DGT		
-29									SPACER, Intermediate Shaft, .193
	04431918	1	1				DGT		
		1	5				DGT		
-30									SPACER, Intermediate Shaft, .211
	04431919	1	1				DGT		
		1	5				DGT		
31									SNAP RING, 6.50 OD
	04461065	1	1				DGT		
		1	5				DGT		
32									PLATE, Transmission Clutch Reaction
	04461047	3	1				DGT		
		3	5				DGT		
33									DISC, Direct Clutch
	04461181	4	1				DGT		
		4	5				DGT		
34									PLATE, Transmission Clutch Reaction
	04461033	2	1				DGT		
		2	5				DGT		

DAKOTA (AN)

SERIES	LINE	BODY	ENGINE	TRANSMISSION
L = Quad Cab L = Regular Cab L = Club Cab	1 = Dakota 2WD 5 = Dakota 4WD	31 = CLUB CAB 2-DR 6.5 FT BOX 61 = REG CAB 6.5 FT BOX 84 = CREW CAB 4-DR W.B.1	EPO = 2.5L 4 Cyl. EHO = 3.9L 6 Cyl. EMO = 5.9L 8 Cyl. EVO = 4.7L Magnum EHC = 3.9L SMPI V6 EML = 5.9L V8 MPI Engine EPE = 2.5L POWER TECH I-4 Cyl. EVA = 4.7L V8 MPI	DDC = TRANSMISSION - 5-SPEED HD MANUAL DG4 = TRANSMISSION-MULTI-SPEED AUTO, 45RFE DGK = TRANSMISSION - 4-SPD. AUTOMATIC,42RE DGT = TRANSMISSION - 4-SPD. AUTOMATIC,46RE DGO = AUTO. TRANS.

Clutch [46 RE] [DGT]
Figure 46RE-1010

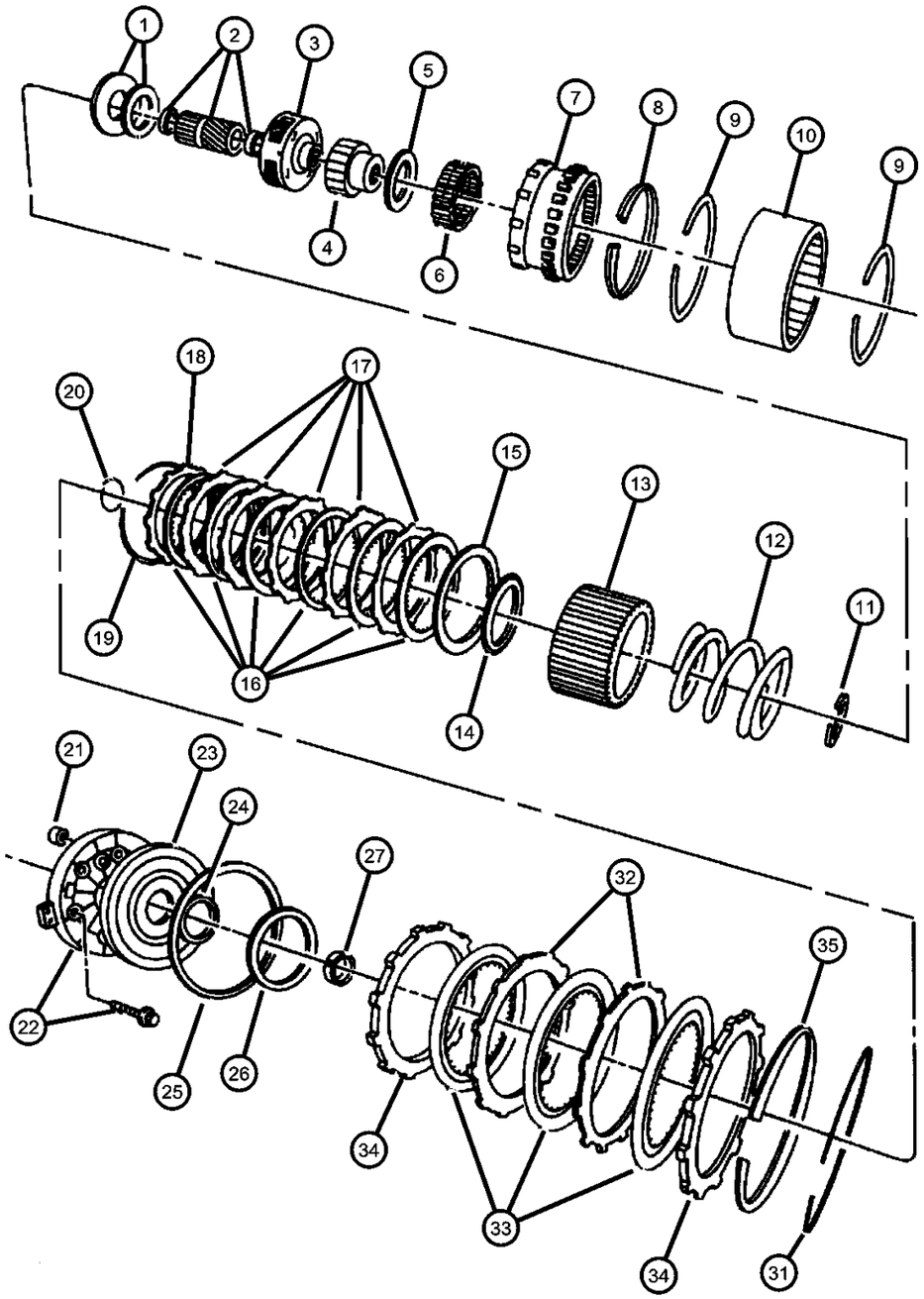

ITEM	PART NUMBER	QTY	LINE	SERIES	BODY	ENGINE	TRANS	TRIM	DESCRIPTION
35									SPRING, Overdrive Clutch
	04461066	1	1				DGT		
		1	5				DGT		

DAKOTA (AN)

SERIES	LINE	BODY	ENGINE	TRANSMISSION
L = Quad Cab L = Regular Cab L = Club Cab	1 = Dakota 2WD 5 = Dakota 4WD	31 = CLUB CAB 2-DR 6.5 FT BOX 61 = REG CAB 6.5 FT BOX 84 = CREW CAB 4-DR W.B.1	EPO = 2.5L 4 Cyl. EHO = 3.9L 6 Cyl. EMO = 5.9L 8 Cyl. EVO = 4.7L Magnum EHC = 3.9L SMPI V6 EML = 5.9L V8 MPI Engine EPE = 2.5L POWER TECH I-4 Cyl. EVA = 4.7L V8 MPI	DDC = TRANSMISSION - 5-SPEED HD MANUAL DG4 = TRANSMISSION-MULTI-SPEED AUTO, 45RFE DGK = TRANSMISSION - 4-SPD. AUTOMATIC,42RE DGT = TRANSMISSION - 4-SPD. AUTOMATIC,46RE DGO = AUTO. TRANS.

Gearshift Controls [46 RE] [DGT]
Figure 46RE-1220

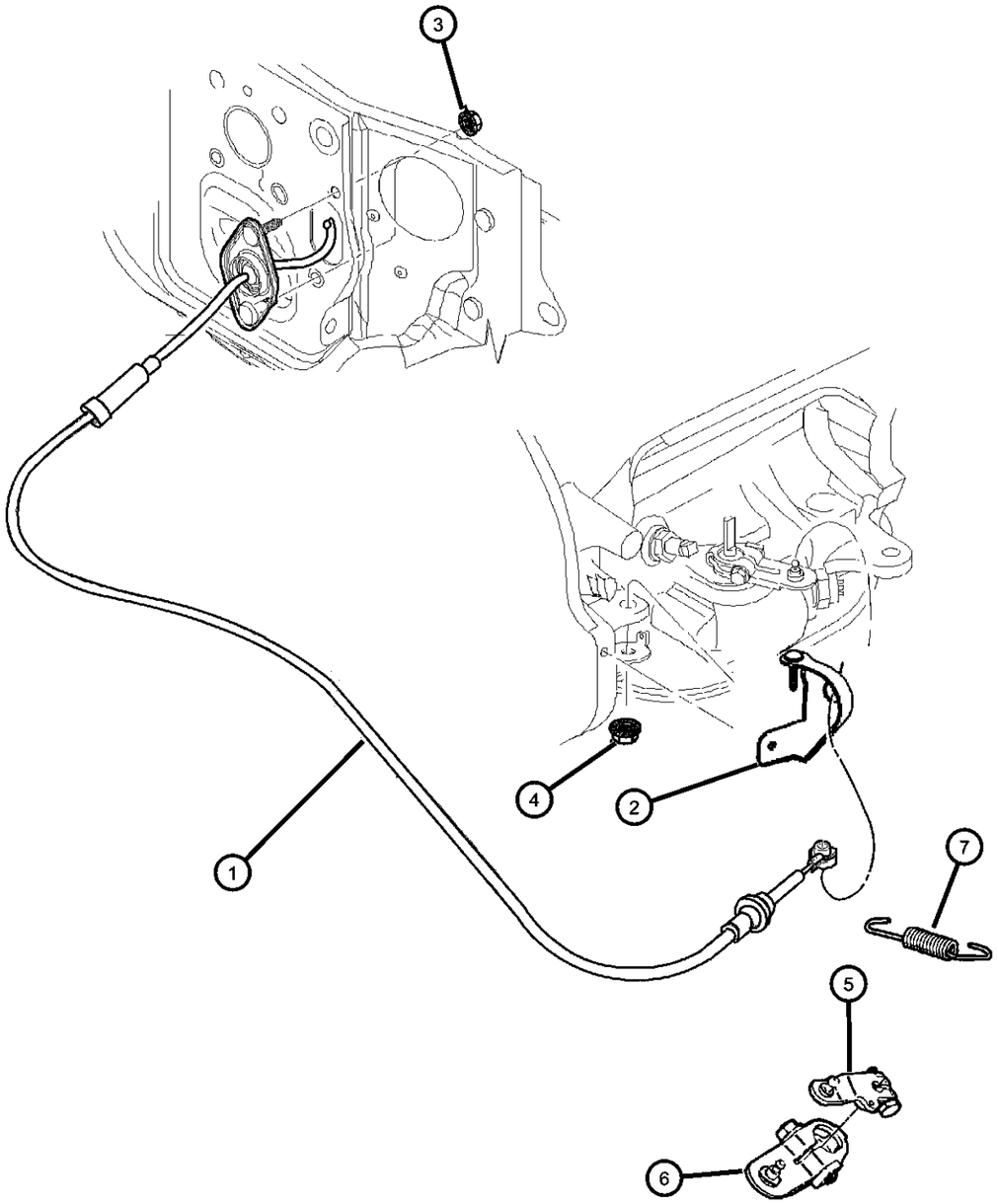

ITEM	PART NUMBER	QTY	LINE	SERIES	BODY	ENGINE	TRANS	TRIM	DESCRIPTION

NOTES:
Sales Codes:
EML = 5.9L SMPI MAGNUM V8 Engine

1	52107700	1					DGK, DGT		CABLE, Shift
2	52107685	1				EM0	DGT		BRACKET, Shift Cable
3	06503269	2					DG0		NUT, Hex, M10-1.5
4	06502697	1					DGK, DGT		NUT, Hex Flange Lock, M12x1.75
5	52079065	1					DGK, DGT		LEVER, Throttle Valve
6	52107686AB	1					DGT		LEVER, Manual Control
7	53009055	1					DGK, DGT		SPRING, Throttle Valve Return

DAKOTA (AN)

SERIES	LINE	BODY	ENGINE	TRANSMISSION
L = Quad Cab L = Regular Cab L = Club Cab	1 = Dakota 2WD 5 = Dakota 4WD	31 = CLUB CAB 2-DR 6.5 FT BOX 61 = REG CAB 6.5 FT BOX 84 = CREW CAB 4-DR W.B.1	EPO = 2.5L 4 Cyl. EHO = 3.9L 6 Cyl. EMO = 5.9L 8 Cyl. EVO = 4.7L Magnum EHC = 3.9L SMPI V6 EML = 5.9L V8 MPI Engine EPE = 2.5L POWER TECH I-4 Cyl. EVA = 4.7L V8 MPI	DDC = TRANSMISSION - 5-SPEED HD MANUAL DG4 = TRANSMISSION-MULTI-SPEED AUTO, 45RFE DGK = TRANSMISSION - 4-SPD. AUTOMATIC,42RE DGT = TRANSMISSION - 4-SPD. AUTOMATIC,46RE DGO = AUTO. TRANS.

Group - 3500

Manual Transmission 5 Speed

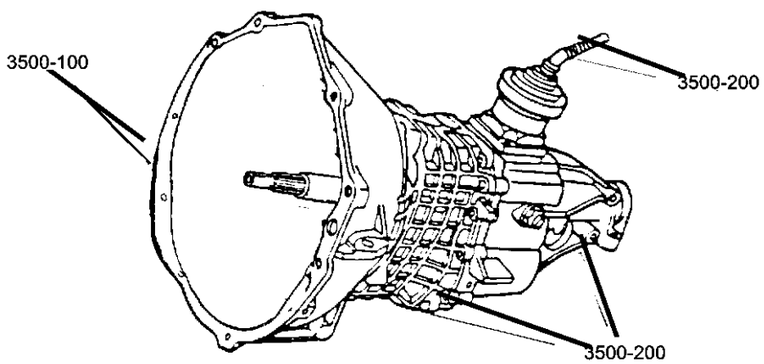

3500-100 Transmission Assembly 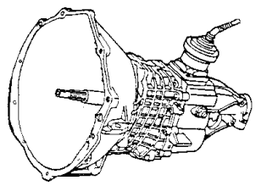	**3500-1200** Gearshift Controls 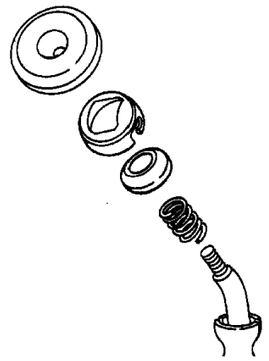	**3500-200** Case and Extension 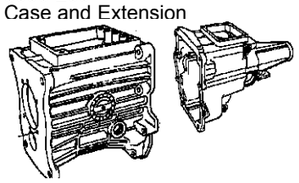	**3500-400** Gear Train 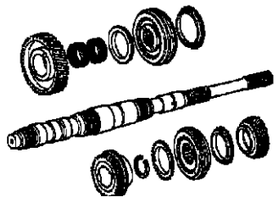
3500-900 Fork and Rails 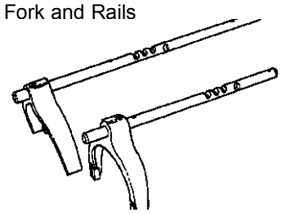			

Group - 3500 Manual Transmission 5 Speed

Illustration Title — Group-Fig. No.

Transmission Assembly
Transmission [DDC] ..... Fig. 3500 - 110

Case and Extension
Case and Extension [DDC] ..... Fig. 3500 - 210

Gear Train
Gear Train [DDC] ..... Fig. 3500 - 410

Fork and Rails
Forks and Rail [DDC] ..... Fig. 3500 - 910

Gearshift Controls
Gearshift Controls [DDC] ..... Fig. 3500 - 1210

Transmission [DDC]
Figure 3500-110

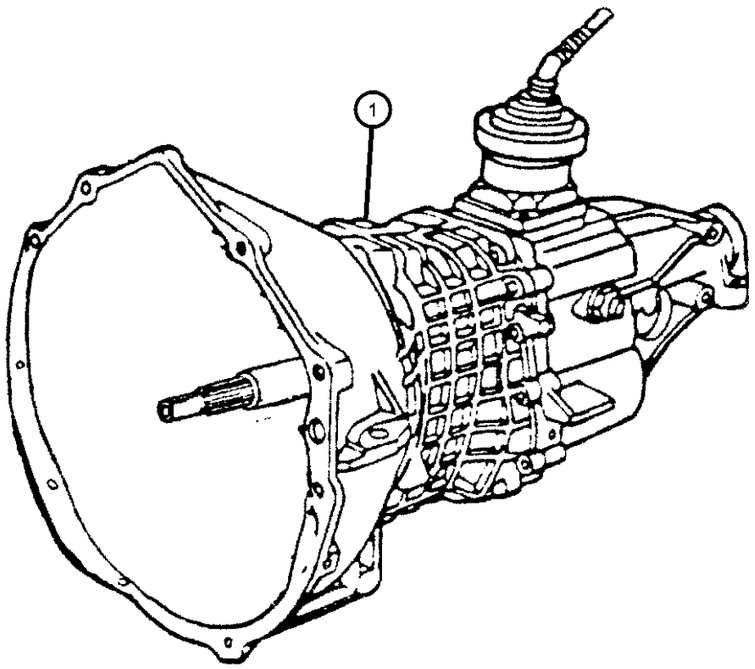

ITEM	PART NUMBER	QTY	LINE	SERIES	BODY	ENGINE	TRANS	TRIM	DESCRIPTION
DBB= All Manual Transmissions									
1									TRANSMISSION, 5 Speed
	52108228AB	1	1			EH0, EV0	DBB		
	04874464								Mopar Manual Transmission Fluid
	52108229AB	1	5			EH0, EV0	DBB		
	04874464								Mopar Manual Transmission Fluid

DAKOTA (AN)

SERIES	LINE	BODY	ENGINE	TRANSMISSION
L = Quad Cab	1 = Dakota 2WD	31 = CLUB CAB 2-DR 6.5 FT BOX	EPO = 2.5L 4 Cyl.	DDC = TRANSMISSION - 5-SPEED HD MANUAL
L = Regular Cab	5 = Dakota 4WD	61 = REG CAB 6.5 FT BOX	EHO = 3.9L 6 Cyl.	DG4 = TRANSMISSION-MULTI-SPEED AUTO, 45RFE
L = Club Cab		84 = CREW CAB 4-DR W.B.1	EMO = 5.9L 8 Cyl.	DGK = TRANSMISSION - 4-SPD. AUTOMATIC,42RE
			EVO = 4.7L Magnum	DGT = TRANSMISSION - 4-SPD. AUTOMATIC,46RE
			EHC = 3.9L SMPI V6	DGO = AUTO. TRANS.
			EML = 5.9L V8 MPI Engine	
			EPE = 2.5L POWER TECH I-4 Cyl.	
			EVA = 4.7L V8 MPI	

Case and Extension [DDC]
Figure 3500-210

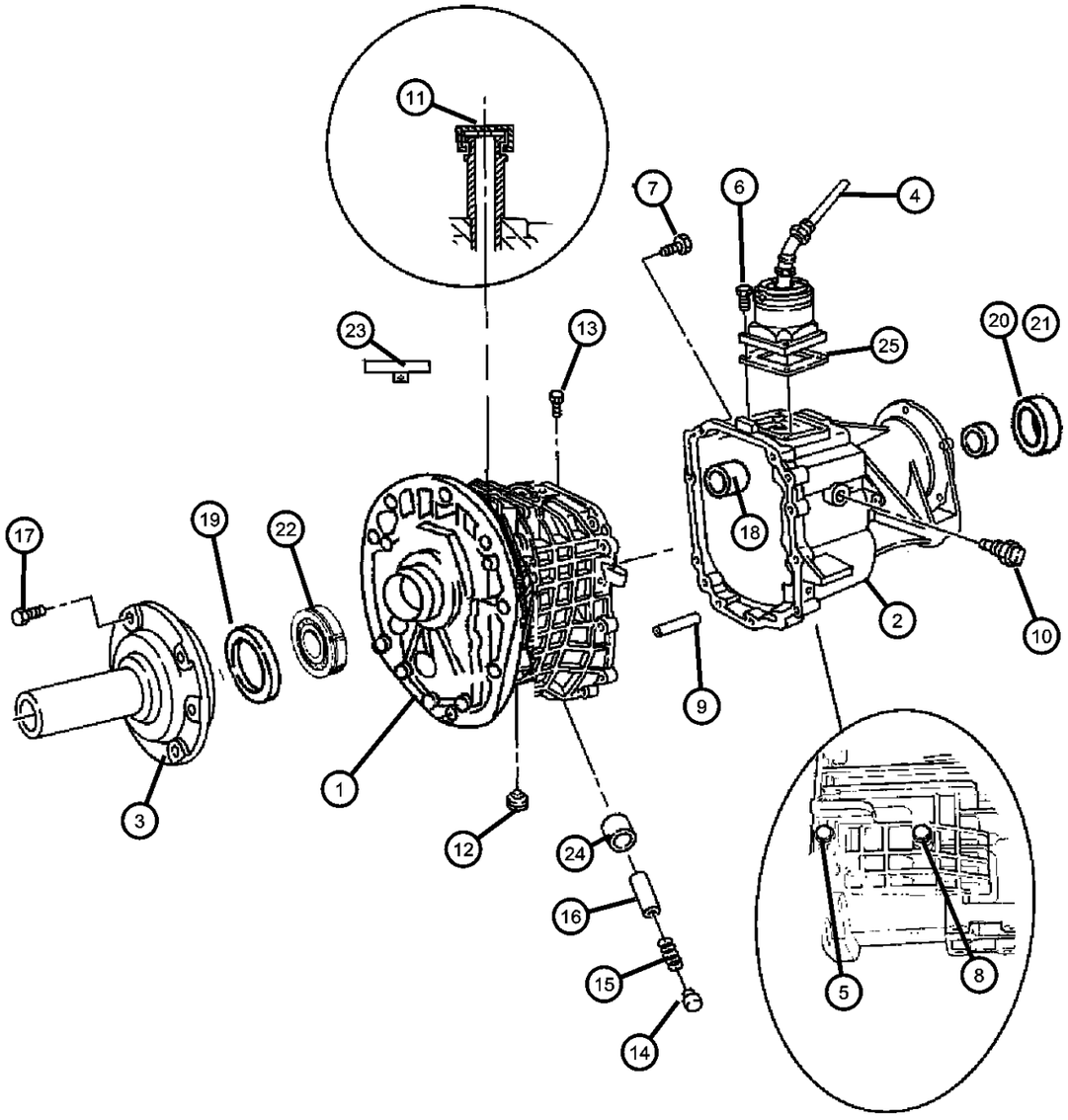

ITEM	PART NUMBER	QTY	LINE	SERIES	BODY	ENGINE	TRANS	TRIM	DESCRIPTION
DBB= All Manual Transmissions									
1									CASE, Transmission
	05015574AA	1	1			EH0, EV0	DBB		
		1	5			EH0, EV0	DBB		
2									CASE, Transmission Rear
	05003286AA	1	1			EH0, EV0	DBB		
	05015188AA	1	5			EH0, EV0	DBB		
3									RETAINER, Shaft
	04874019	1	1			EH0, EV0	DBB		
		1	5			EH0, EV0	DBB		
4									LEVER, Gearshift
	04886156AA	1	5			EH0, EV0	DBB		
	04886196AA	1	1			EH0, EV0	DBB		
5									BOLT, M8-1.25x70
	04741313	1	1			EH0, EV0	DBB		
		1	5			EH0, EV0	DBB		
6									BOLT, Hex Head
	04741144	4	1			EH0, EV0			
		4	5			EH0, EV0	DBB		
7									BOLT, Hex Head, M8x1.25x50
	04741123	11	1			EH0, EV0			
		11	5			EH0, EV0	DBB		
8									BOLT, Hex
	04741115	3	5			EH0, EV0	DBB		
		1	1			EH0, EV0	DBB		
9									PIN, Locating
	04741122	2	1			EH0, EV0			
		2	5			EH0, EV0	DBB		
10									SWITCH, Back Up Lamp
	04741121	1	1			EH0, EV0	DBB		
		1	5			EH0, EV0	DBB		
11									VENT, Transmission

DAKOTA (AN)

SERIES	LINE	BODY	ENGINE	TRANSMISSION
L = Quad Cab L = Regular Cab L = Club Cab	1 = Dakota 2WD 5 = Dakota 4WD	31 = CLUB CAB 2-DR 6.5 FT BOX 61 = REG CAB 6.5 FT BOX 84 = CREW CAB 4-DR W.B.1	EPO = 2.5L 4 Cyl. EHO = 3.9L 6 Cyl. EMO = 5.9L 8 Cyl. EVO = 4.7L Magnum EHC = 3.9L SMPI V6 EML = 5.9L V8 MPI Engine EPE = 2.5L POWER TECH I-4 Cyl. EVA = 4.7L V8 MPI	DDC = TRANSMISSION - 5-SPEED HD MANUAL DG4 = TRANSMISSION-MULTI-SPEED AUTO, 45RFE DGK = TRANSMISSION - 4-SPD. AUTOMATIC,42RE DGT = TRANSMISSION - 4-SPD. AUTOMATIC,46RE DGO = AUTO. TRANS.

Case and Extension [DDC]
Figure 3500-210

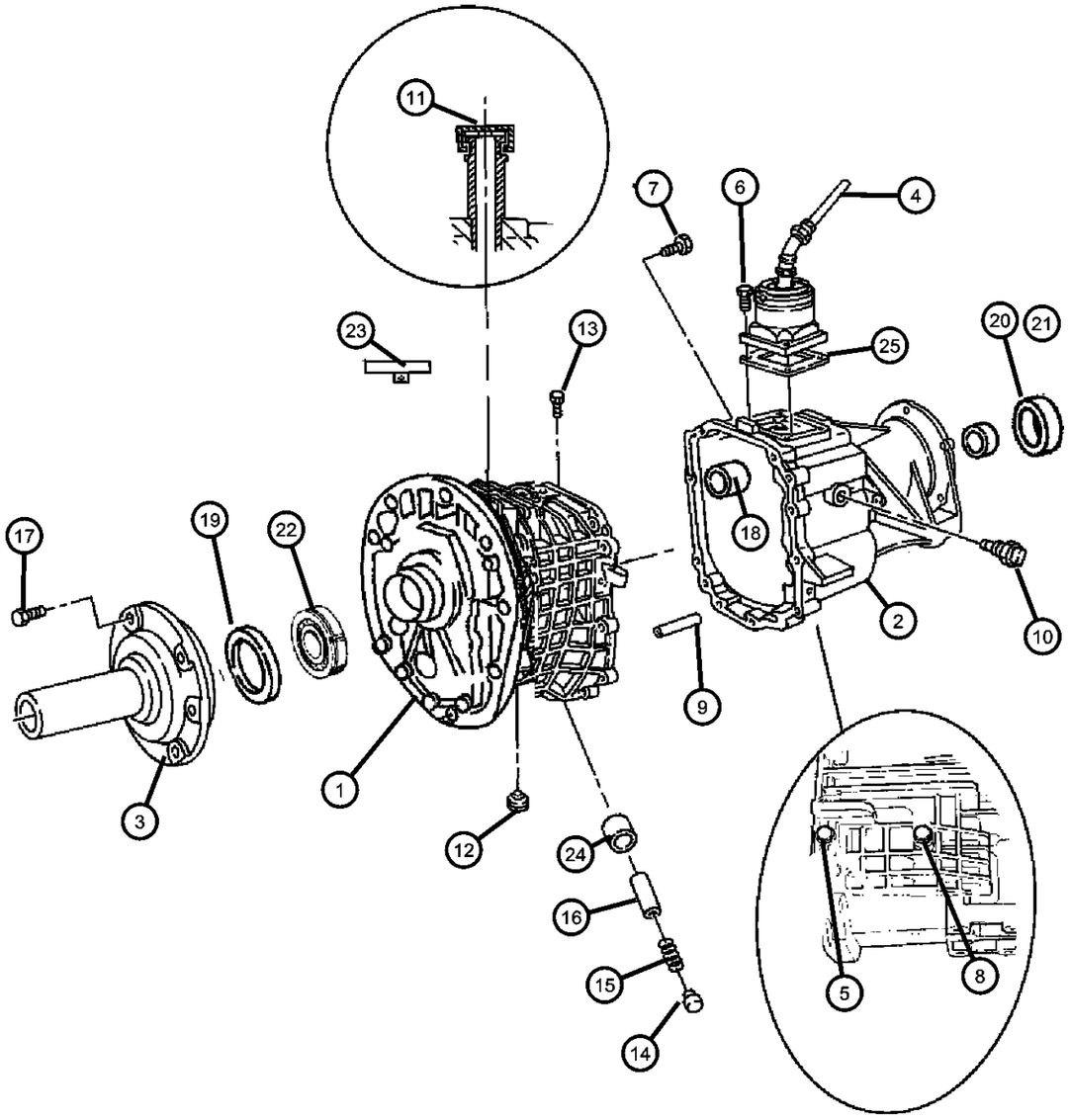

ITEM	PART NUMBER	QTY	LINE	SERIES	BODY	ENGINE	TRANS	TRIM	DESCRIPTION
	04740901	1	1			EH0, EV0	DBB		
		1	5			EH0, EV0	DBB		
12									PLUG, Oil Fill
	04882280	1	1			EH0, EV0	DBB		
		1	5			EH0, EV0	DBB		
13									PIN, Detent
	04740904	1	1			EH0, EV0	DBB		
		1	5			EH0, EV0	DBB		
14									CAP, Detent
	04741128	1	1			EH0, EV0	DBB		
		1	5			EH0, EV0	DBB		
15									SPRING, Shift Detent
	04746095	1	1			EH0, EV0	DBB		
		1	5			EH0, EV0	DBB		
16									PLUNGER
	05016233AA	1	1			EH0, EV0	DBB		
		1	5			EH0, EV0	DBB		
17									BOLT, Hex Head, M6x1.00x25
	04741300	6	1			EH0, EV0			
		6	5			EH0, EV0	DBB		
18									BEARING, Ball
	04741112	1	1			EH0, EV0	DBB		
		1	5			EH0, EV0	DBB		
19									SEAL, Input Shaft
	04741296	1	1			EH0, EV0	DBB		
		1	5			EH0, EV0	DBB		
20	04531216	1	1			EH0, EV0	DBB		SEAL, Extension Yoke
21	04741118	1	5			EH0, EV0	DBB		SEAL, Output Shaft
22									BEARING, Input Shaft
	04874174	1	1			EH0, EV0	DBB		
		1	5			EH0, EV0	DBB		

DAKOTA (AN)

SERIES	LINE	BODY	ENGINE	TRANSMISSION
L = Quad Cab L = Regular Cab L = Club Cab	1 = Dakota 2WD 5 = Dakota 4WD	31 = CLUB CAB 2-DR 6.5 FT BOX 61 = REG CAB 6.5 FT BOX 84 = CREW CAB 4-DR W.B.1	EPO = 2.5L 4 Cyl. EHO = 3.9L 6 Cyl. EMO = 5.9L 8 Cyl. EVO = 4.7L Magnum EHC = 3.9L SMPI V6 EML = 5.9L V8 MPI Engine EPE = 2.5L POWER TECH I-4 Cyl. EVA = 4.7L V8 MPI	DDC = TRANSMISSION - 5-SPEED HD MANUAL DG4 = TRANSMISSION-MULTI-SPEED AUTO, 45RFE DGK = TRANSMISSION - 4-SPD. AUTOMATIC,42RE DGT = TRANSMISSION - 4-SPD. AUTOMATIC,46RE DGO = AUTO. TRANS.

AR = use ase required - = Non illustrrated part

Case and Extension [DDC]
Figure 3500-210

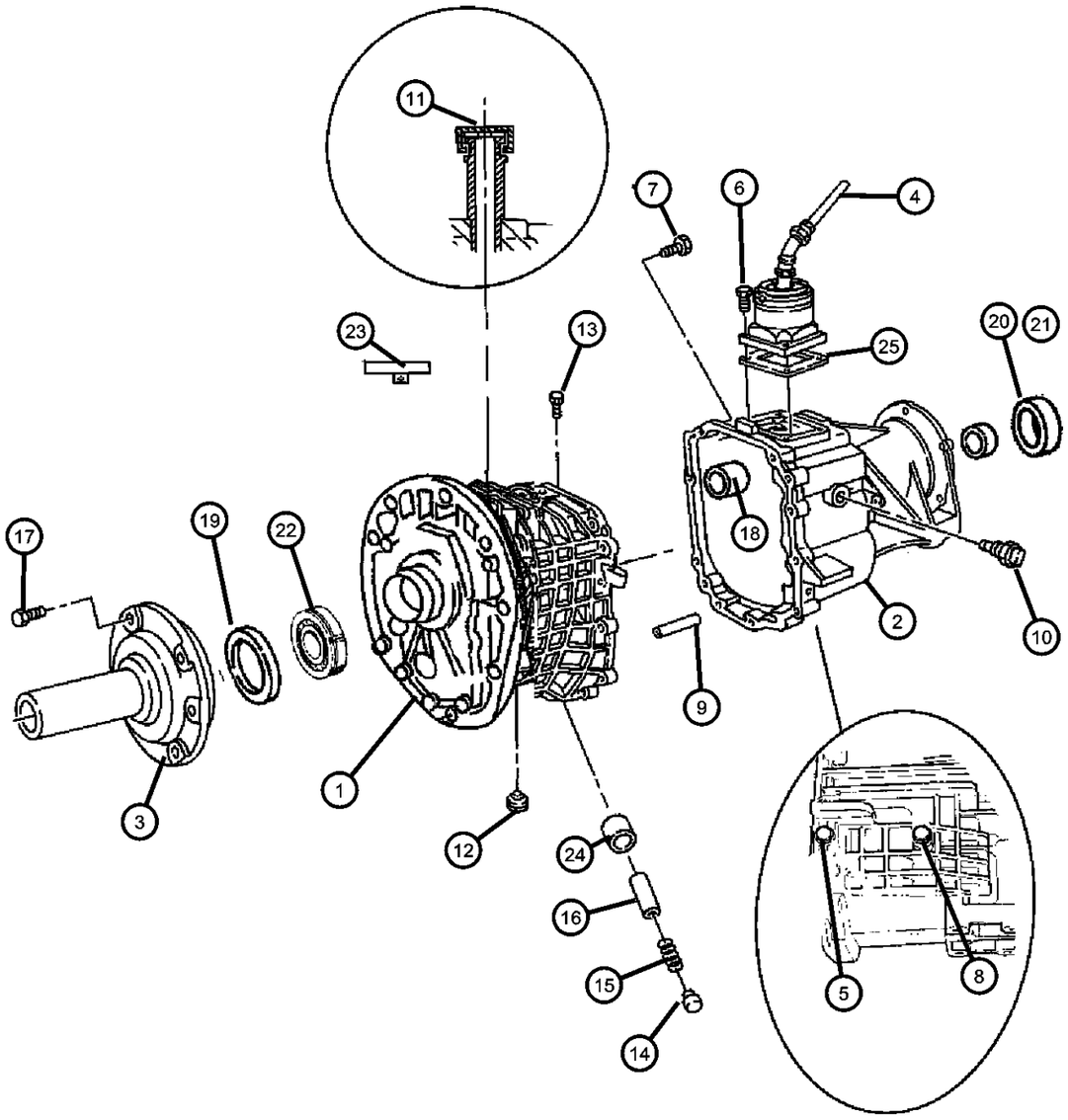

ITEM	PART NUMBER	QTY	LINE	SERIES	BODY	ENGINE	TRANS	TRIM	DESCRIPTION
23									VENT, Transmission
	04740902	1	1			EH0, EV0	DBB		
		1	5			EH0, EV0	DBB		
24									BUSHING, Transmission
	05012337AA	1	1			EH0, EV0	DBB		
		1	5			EH0, EV0	DBB		
25									SEAL, Shift Lever
	04886153AA	1	1			EH0, EV0	DBB		
		1	5			EH0, EV0	DBB		

DAKOTA (AN)

SERIES	LINE	BODY	ENGINE	TRANSMISSION
L = Quad Cab L = Regular Cab L = Club Cab	1 = Dakota 2WD 5 = Dakota 4WD	31 = CLUB CAB 2-DR 6.5 FT BOX 61 = REG CAB 6.5 FT BOX 84 = CREW CAB 4-DR W.B.1	EPO = 2.5L 4 Cyl. EHO = 3.9L 6 Cyl. EMO = 5.9L 8 Cyl. EVO = 4.7L Magnum EHC = 3.9L SMPI V6 EML = 5.9L V8 MPI Engine EPE = 2.5L POWER TECH I-4 Cyl. EVA = 4.7L V8 MPI	DDC = TRANSMISSION - 5-SPEED HD MANUAL DG4 = TRANSMISSION-MULTI-SPEED AUTO, 45RFE DGK = TRANSMISSION - 4-SPD. AUTOMATIC,42RE DGT = TRANSMISSION - 4-SPD. AUTOMATIC,46RE DGO = AUTO. TRANS.

Gear Train [DDC]
Figure 3500-410

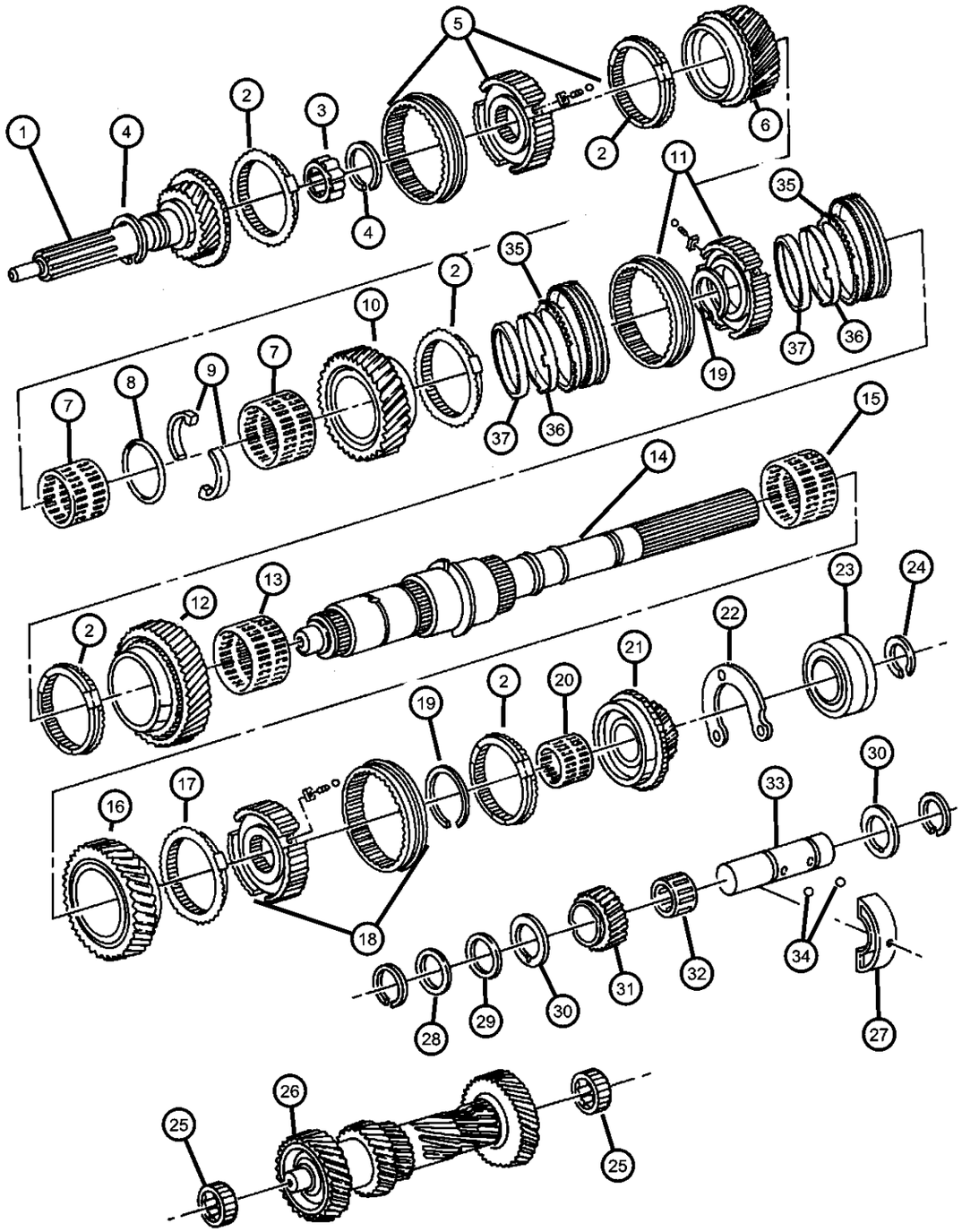

ITEM	PART NUMBER	QTY	LINE	SERIES	BODY	ENGINE	TRANS	TRIM	DESCRIPTION
DBB= All Manual Transmissions									
1									INPUT SHAFT, Transmission
	04741294	1	1			EH0, EV0	DBB		
		1	5			EH0, EV0	DBB		
2									STOP RING, Synchronizer
	04741277	1	1			EH0, EV0	DBB		
		1	5			EH0, EV0	DBB		
3									NEEDLE BEARING, Input Shaft
	04741878	1	1			EH0, EV0	DBB		
		1	5			EH0, EV0	DBB		
4									SNAP RING, Output Shaft Bearing
	04741266	1	1			EH0, EV0	DBB		
		1	5			EH0, EV0	DBB		
5									SYNCHRONIZER, Third and Fourth
	04741293	1	1			EH0, EV0	DBB		
		1	5			EH0, EV0	DBB		
6									GEAR, Third
	04883718AA	1	1			EH0, EV0	DBB		
		1	5			EH0, EV0	DBB		
7									NEEDLE BEARING, Second Gear
	05003039AA	1	1			EH0, EV0	DBB		
		1	5			EH0, EV0	DBB		
8									SNAP RING
	04897922AA	1	1			EH0, EV0	DBB		
		1	5			EH0, EV0	DBB		
9									THRUST WASHER, Second And Third Gear
	04746070	2	1			EH0, EV0			
		2	5			EH0, EV0	DBB		
10									GEAR, Second
	04874358	1	1			EH0, EV0	DBB		
		1	5			EH0, EV0	DBB		

DAKOTA (AN)

SERIES	LINE	BODY	ENGINE	TRANSMISSION
L = Quad Cab L = Regular Cab L = Club Cab	1 = Dakota 2WD 5 = Dakota 4WD	31 = CLUB CAB 2-DR 6.5 FT BOX 61 = REG CAB 6.5 FT BOX 84 = CREW CAB 4-DR W.B.1	EPO = 2.5L 4 Cyl. EHO = 3.9L 6 Cyl. EMO = 5.9L 8 Cyl. EVO = 4.7L Magnum EHC = 3.9L SMPI V6 EML = 5.9L V8 MPI Engine EPE = 2.5L POWER TECH I-4 Cyl. EVA = 4.7L V8 MPI	DDC = TRANSMISSION - 5-SPEED HD MANUAL DG4 = TRANSMISSION-MULTI-SPEED AUTO, 45RFE DGK = TRANSMISSION - 4-SPD. AUTOMATIC,42RE DGT = TRANSMISSION - 4-SPD. AUTOMATIC,46RE DGO = AUTO. TRANS.

AR = use ase required - = Non illustrrated part

Gear Train [DDC]
Figure 3500-410

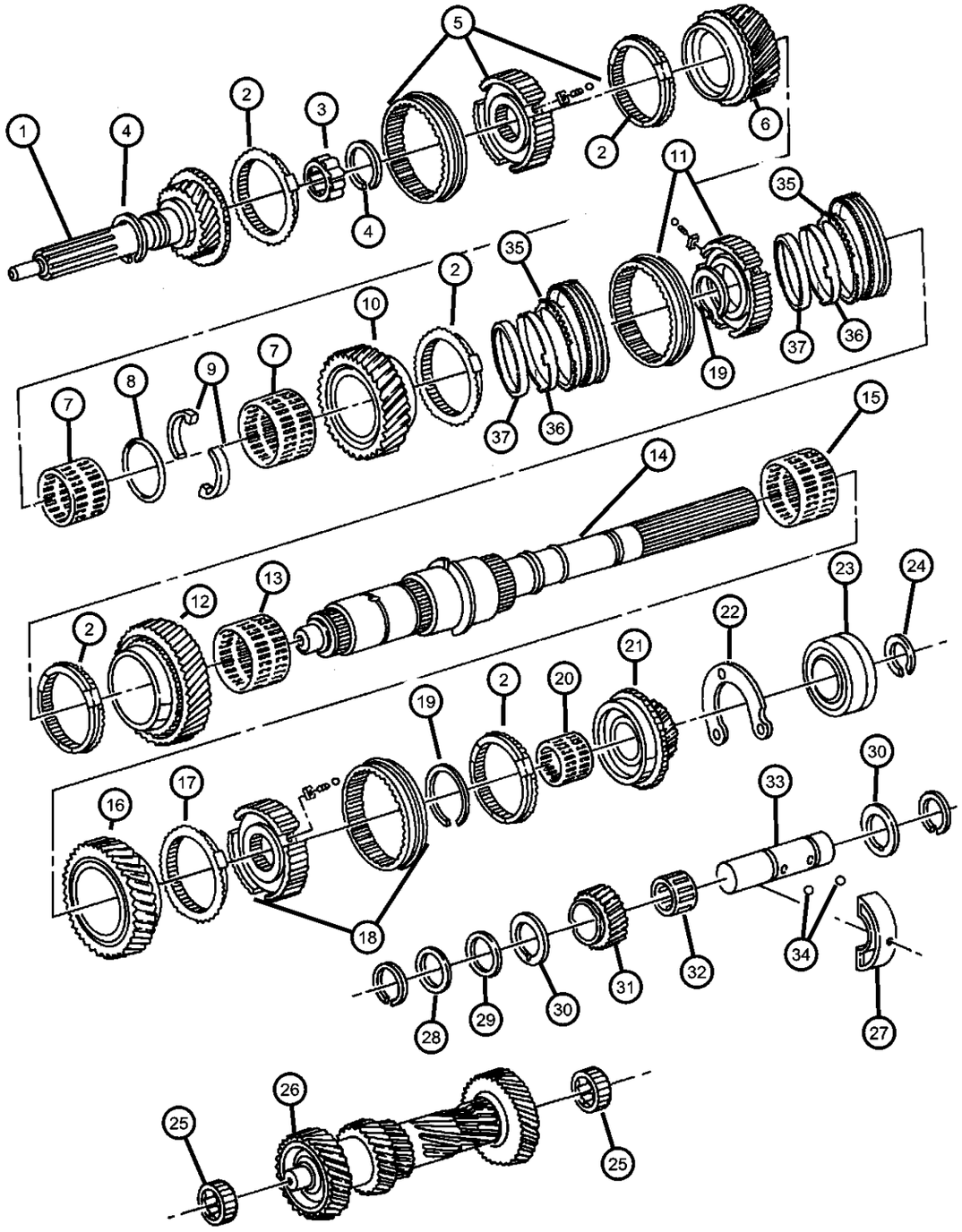

ITEM	PART NUMBER	QTY	LINE	SERIES	BODY	ENGINE	TRANS	TRIM	DESCRIPTION
11									SYNCHRONIZER, First and Second
	04874356	1	1			EH0, EV0	DBB		
		1	5			EH0, EV0	DBB		
12									GEAR, First
	04874355	1	1			EH0, EV0	DBB		
		1	5			EH0, EV0	DBB		
13									BEARING, First Gear
	04874353	1	1			EH0, EV0	DBB		
		1	5			EH0, EV0	DBB		
14									SHAFT, Output
	04874309	1	5			EH0, EV0	DBB		
	05003288AA	1	1			EH0, EV0	DBB		
15									NEEDLE BEARING, Transmission
	04741871	1	5			EH0, EV0	DBB		
		1	1			EH0, EV0	DBB		
16									GEAR, Reverse
	04741284	1	1			EH0, EV0	DBB		
		1	5			EH0, EV0	DBB		
17									STOP RING, Synchronizer
	04741285	1	1			EH0, EV0	DBB		
		1	5			EH0, EV0	DBB		
18									SYNCHRONIZER, Fifth And Reverse
	04741278	1	1			EH0, EV0	DBB		
		1	5			EH0, EV0	DBB		
19									RING, Transmission
	04741805	AR	1			EH0, EV0			
		AR	5			EH0, EV0	DBB		
20									BEARING, Needle
	04741273	1	1			EH0, EV0	DBB		Fifth Gear
		1	5			EH0, EV0	DBB		Fifth Gear
21									GEAR, Fifth

DAKOTA (AN)

SERIES	LINE	BODY	ENGINE	TRANSMISSION
L = Quad Cab	1 = Dakota 2WD	31 = CLUB CAB 2-DR 6.5 FT BOX	EPO = 2.5L 4 Cyl.	DDC = TRANSMISSION - 5-SPEED HD MANUAL
L = Regular Cab	5 = Dakota 4WD	61 = REG CAB 6.5 FT BOX	EHO = 3.9L 6 Cyl.	DG4 = TRANSMISSION-MULTI-SPEED AUTO, 45RFE
L = Club Cab		84 = CREW CAB 4-DR W.B.1	EMO = 5.9L 8 Cyl.	DGK = TRANSMISSION - 4-SPD. AUTOMATIC,42RE
			EVO = 4.7L Magnum	DGT = TRANSMISSION - 4-SPD. AUTOMATIC,46RE
			EHC = 3.9L SMPI V6	DGO = AUTO. TRANS.
			EML = 5.9L V8 MPI Engine	
			EPE = 2.5L POWER TECH I-4 Cyl.	
			EVA = 4.7L V8 MPI	

AR = use ase required - = Non illustrrated part

<< RETURN TO GROUP INDEX

Gear Train [DDC]
Figure 3500-410

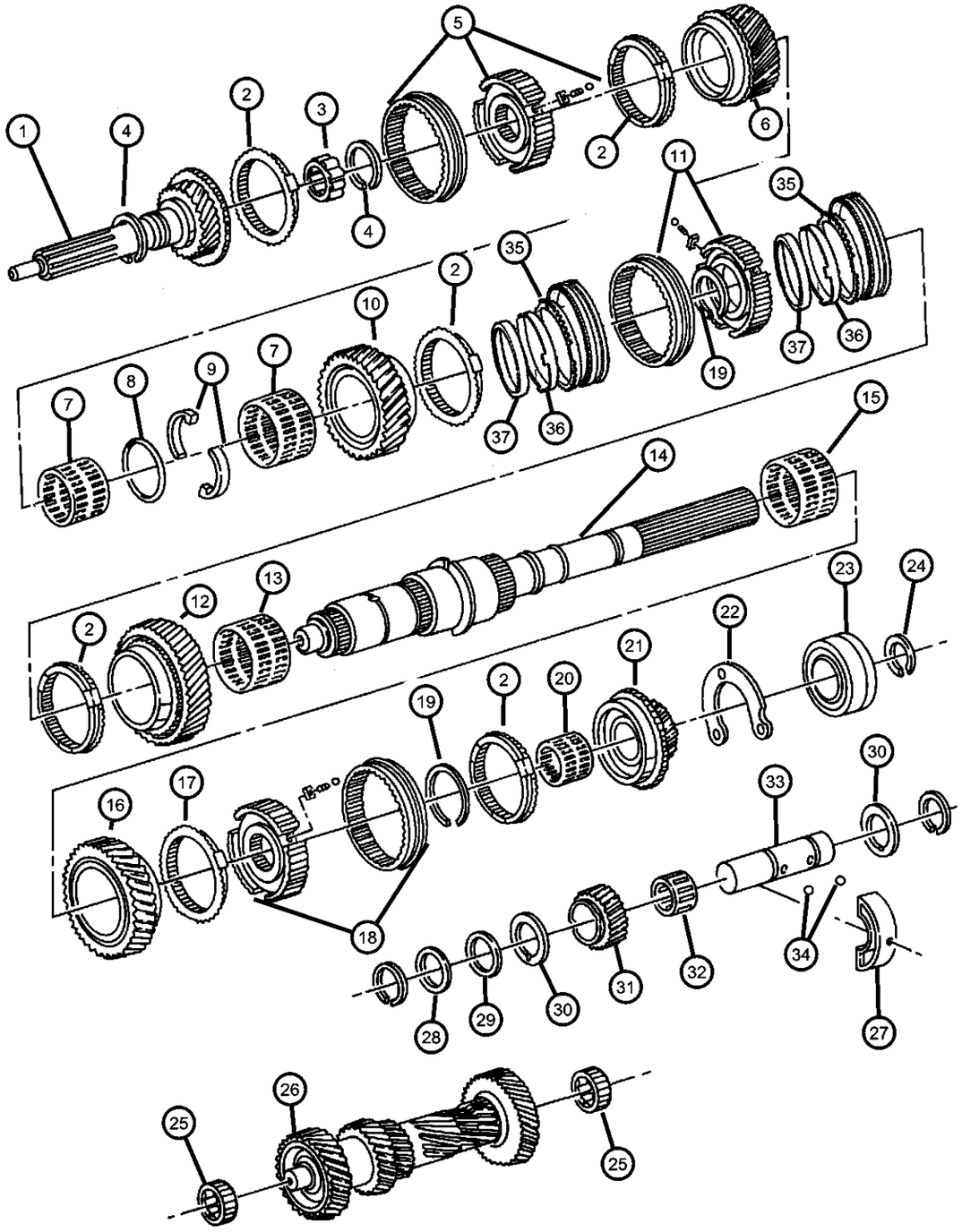

ITEM	PART NUMBER	QTY	LINE	SERIES	BODY	ENGINE	TRANS	TRIM	DESCRIPTION
	04883300	1	1			EH0, EV0	DBB		
		1	5			EH0, EV0	DBB		
22									RETAINER, Transmission Output Shaft Bearing
	04741114	1	5			EH0, EV0	DBB		
	04741116	1	1			EH0, EV0	DBB		
23									BEARING, Output Shaft
	04741866	1	1			EH0, EV0	DBB		
		1	5			EH0, EV0	DBB		
24									SNAP RING, Output Shaft Bearing
	04741266	AR	1			EH0, EV0			
		AR	5			EH0, EV0	DBB		
25									BEARING, Countershaft
	04740900	1	1			EH0, EV0	DBB		
		1	5			EH0, EV0	DBB		
26									SHAFT, Counter
	04741299	1	1			EH0, EV0	DBB		
		1	5			EH0, EV0	DBB		
27									SUPPORT, Segment Idler Shaft
	04741312	1	1			EH0, EV0	DBB		
		1	5			EH0, EV0	DBB		
28									WASHER, Flat
	04741310	1	1			EH0, EV0	DBB		
		1	5			EH0, EV0	DBB		
29									WASHER, Idler Gear
	04741309	1	1			EH0, EV0	DBB		
		1	5			EH0, EV0	DBB		
30									THRUST WASHER, Reverse Idler
	04741307	2	1			EH0, EV0			
		2	5			EH0, EV0	DBB		
31									GEAR, Reverse Idler
	04741306	1	1			EH0, EV0	DBB		

DAKOTA (AN)

SERIES	LINE	BODY	ENGINE	TRANSMISSION
L = Quad Cab	1 = Dakota 2WD	31 = CLUB CAB 2-DR 6.5 FT BOX	EPO = 2.5L 4 Cyl.	DDC = TRANSMISSION - 5-SPEED HD MANUAL
L = Regular Cab	5 = Dakota 4WD	61 = REG CAB 6.5 FT BOX	EHO = 3.9L 6 Cyl.	DG4 = TRANSMISSION-MULTI-SPEED AUTO, 45RFE
L = Club Cab		84 = CREW CAB 4-DR W.B.1	EMO = 5.9L 8 Cyl.	DGK = TRANSMISSION - 4-SPD. AUTOMATIC,42RE
			EVO = 4.7L Magnum	DGT = TRANSMISSION - 4-SPD. AUTOMATIC,46RE
			EHC = 3.9L SMPI V6	DGO = AUTO. TRANS.
			EML = 5.9L V8 MPI Engine	
			EPE = 2.5L POWER TECH I-4 Cyl.	
			EVA = 4.7L V8 MPI	

AR = use ase required - = Non illustrrated part

Gear Train [DDC]
Figure 3500-410

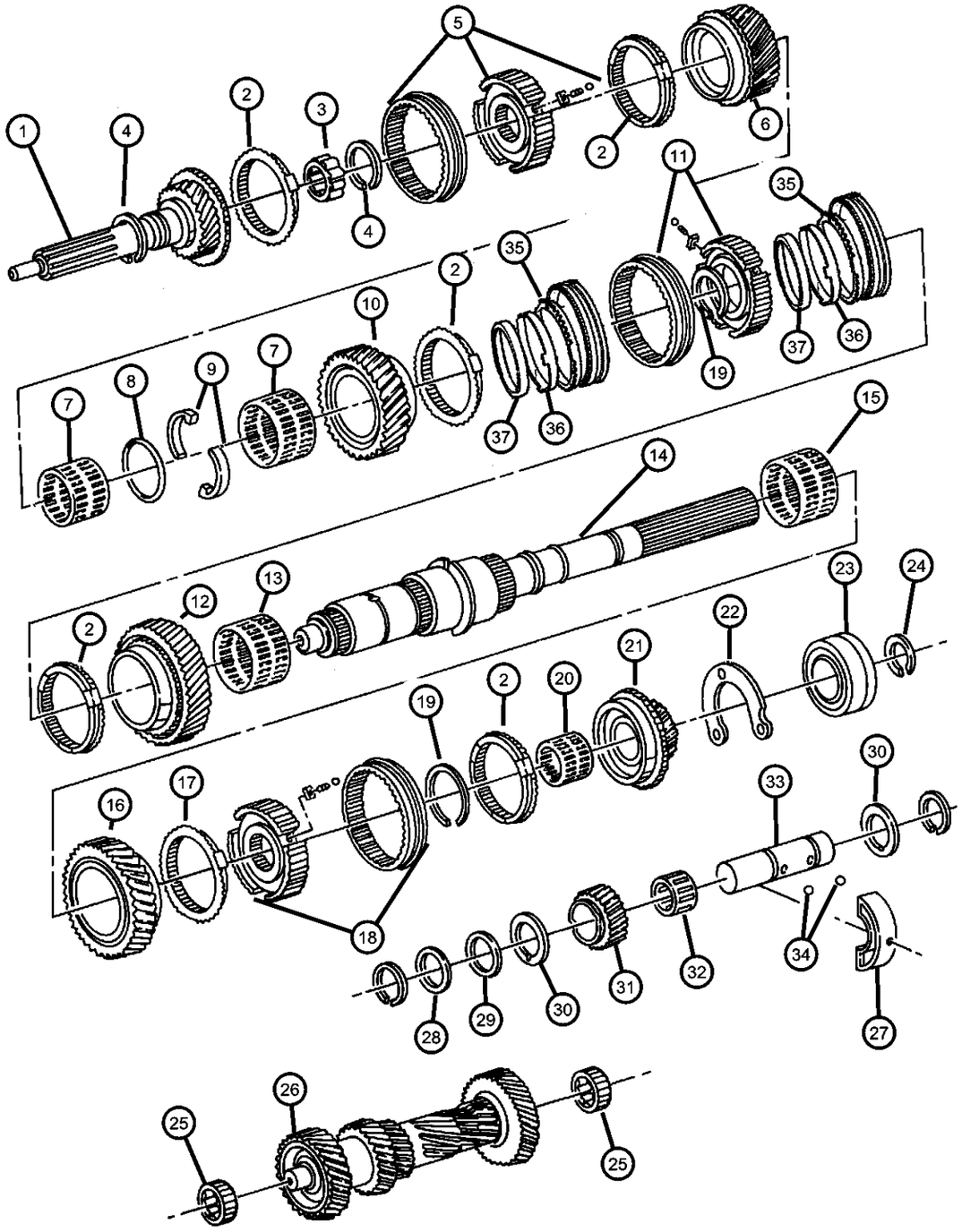

ITEM	PART NUMBER	QTY	LINE	SERIES	BODY	ENGINE	TRANS	TRIM	DESCRIPTION
		1	5			EH0, EV0	DBB		
32									BEARING, Idler
	04874359	1	1			EH0, EV0	DBB		
		1	5			EH0, EV0	DBB		
33									IDLER SHAFT, Transmission
	04741303	1	1			EH0, EV0	DBB		
		1	5			EH0, EV0	DBB		
34									BALL, Check, 4 mm
	04741891	2	1			EH0, EV0			
		2	5			EH0, EV0	DBB		
35									RING, Synchronizer Blocker
	04874363	2	1			EH0, EV0			
		2	5			EH0, EV0	DBB		
36									CONE, Synchronizer
	04874405	2	1			EH0, EV0			
		2	5			EH0, EV0	DBB		
37									RING
	04874403	2	1			EH0, EV0			
		2	5			EH0, EV0	DBB		

DAKOTA (AN)

SERIES	LINE	BODY	ENGINE	TRANSMISSION
L = Quad Cab	1 = Dakota 2WD	31 = CLUB CAB 2-DR 6.5 FT BOX	EPO = 2.5L 4 Cyl.	DDC = TRANSMISSION - 5-SPEED HD MANUAL
L = Regular Cab	5 = Dakota 4WD	61 = REG CAB 6.5 FT BOX	EHO = 3.9L 6 Cyl.	DG4 = TRANSMISSION-MULTI-SPEED AUTO, 45RFE
L = Club Cab		84 = CREW CAB 4-DR W.B.1	EMO = 5.9L 8 Cyl.	DGK = TRANSMISSION - 4-SPD. AUTOMATIC,42RE
			EVO = 4.7L Magnum	DGT = TRANSMISSION - 4-SPD. AUTOMATIC,46RE
			EHC = 3.9L SMPI V6	DGO = AUTO. TRANS.
			EML = 5.9L V8 MPI Engine	
			EPE = 2.5L POWER TECH I-4 Cyl.	
			EVA = 4.7L V8 MPI	

AR = use ase required - = Non illustrrated part

Forks and Rail [DDC]
Figure 3500-910

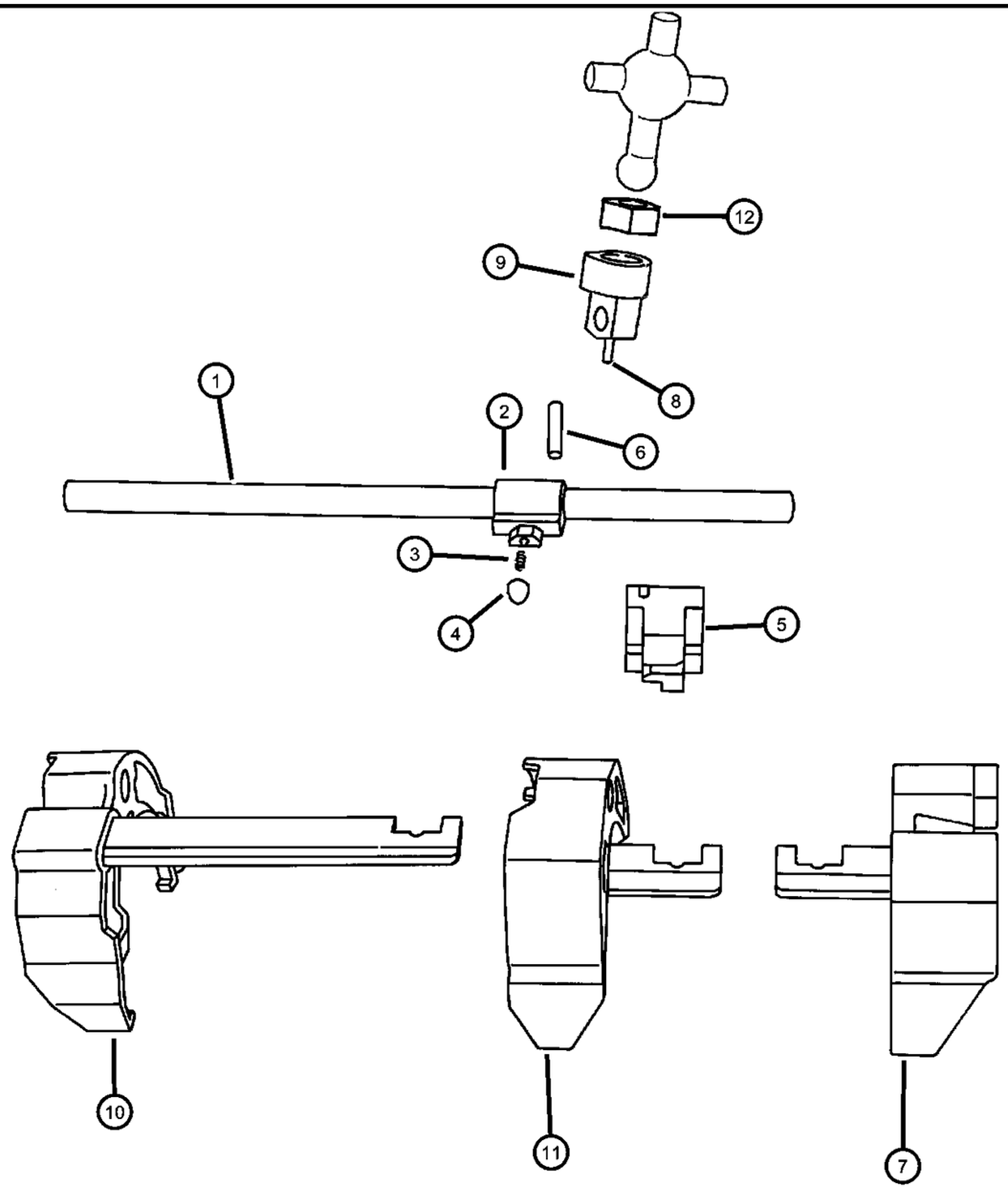

ITEM	PART NUMBER	QTY	LINE	SERIES	BODY	ENGINE	TRANS	TRIM	DESCRIPTION
DBB= All Manual Transmissions									
1									SHAFT, Selector
	05014501AA	1	1			EH0, EV0	DBB		
		1	5			EH0, EV0	DBB		
2									LEVER, Shift Shaft
	05014109AA	1	1			EH0, EV0	DBB		
		1	5			EH0, EV0	DBB		
3									SPRING, Lever
	04741137	AR	1			EH0, EV0			
		AR	5			EH0, EV0	DBB		
4									PLUNGER
	05016233AA	1	1			EH0, EV0	DBB		
		1	5			EH0, EV0	DBB		
5									BUSHING, Transmission
	05012337AA	1	1			EH0, EV0	DBB		
		1	5			EH0, EV0	DBB		
6									PIN, Shift Shaft
	04741138	1	1			EH0, EV0	DBB		
		1	5			EH0, EV0	DBB		
7									FORK, Third and Fourth
	04886076AA	1	1			EH0, EV0	DBB		
		1	5			EH0, EV0	DBB		
8									PIN, Shift Shaft
	04741139	1	1			EH0, EV0	DBB		
		1	5			EH0, EV0	DBB		
9									SOCKET, Shift Shaft
	04874352	1	1			EH0, EV0	DBB		
		1	5			EH0, EV0	DBB		
10									FORK, Transmission
	04773563AB	1	1			EH0, EV0	DBB		
		1	5			EH0, EV0	DBB		
11									FORK, First and Second

DAKOTA (AN)

SERIES	LINE	BODY	ENGINE	TRANSMISSION
L = Quad Cab L = Regular Cab L = Club Cab	1 = Dakota 2WD 5 = Dakota 4WD	31 = CLUB CAB 2-DR 6.5 FT BOX 61 = REG CAB 6.5 FT BOX 84 = CREW CAB 4-DR W.B.1	EPO = 2.5L 4 Cyl. EHO = 3.9L 6 Cyl. EMO = 5.9L 8 Cyl. EVO = 4.7L Magnum EHC = 3.9L SMPI V6 EML = 5.9L V8 MPI Engine EPE = 2.5L POWER TECH I-4 Cyl. EVA = 4.7L V8 MPI	DDC = TRANSMISSION - 5-SPEED HD MANUAL DG4 = TRANSMISSION-MULTI-SPEED AUTO, 45RFE DGK = TRANSMISSION - 4-SPD. AUTOMATIC,42RE DGT = TRANSMISSION - 4-SPD. AUTOMATIC,46RE DGO = AUTO. TRANS.

AR = use ase required - = Non illustrrated part

Forks and Rail [DDC]
Figure 3500-910

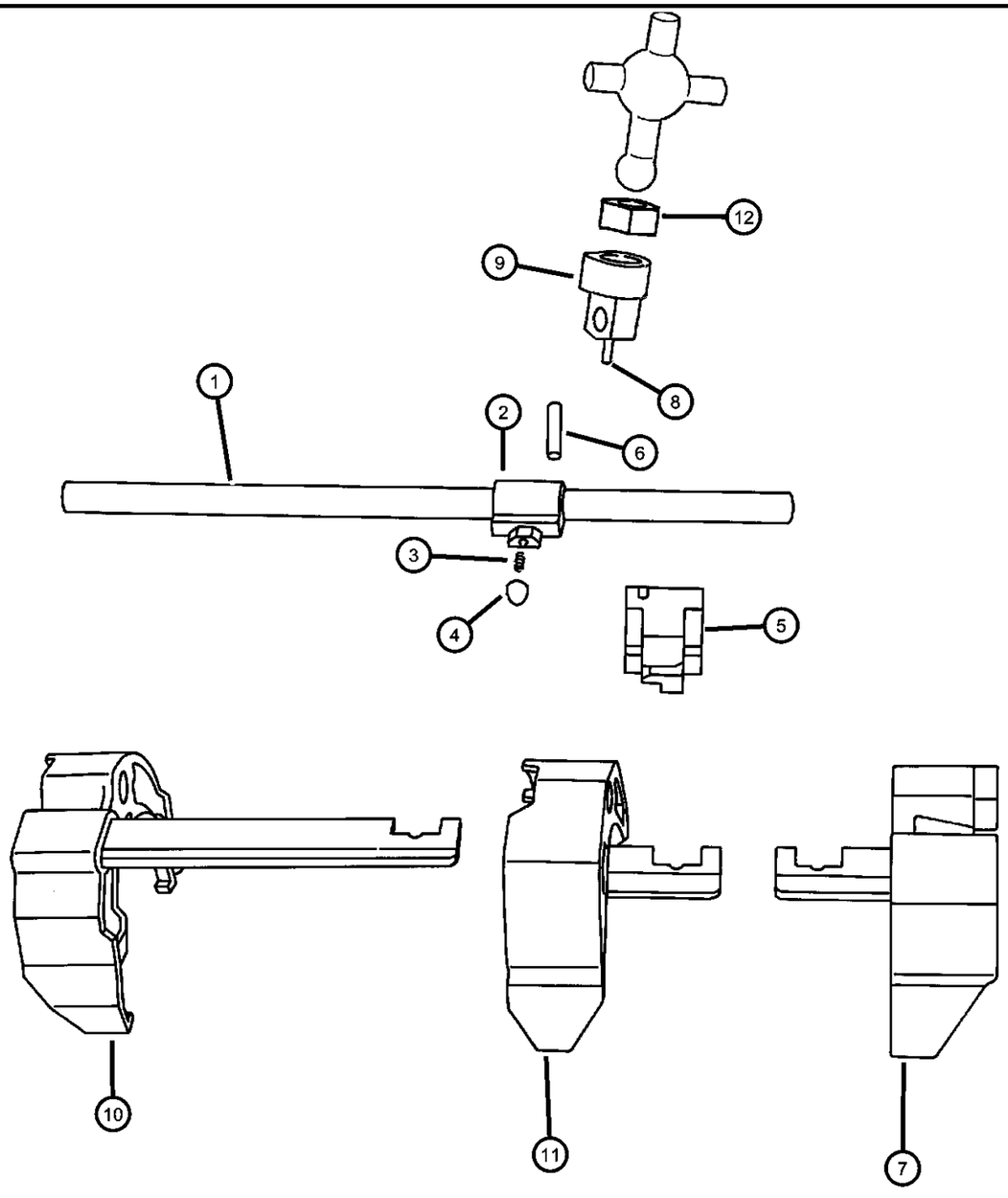

ITEM	PART NUMBER	QTY	LINE	SERIES	BODY	ENGINE	TRANS	TRIM	DESCRIPTION
	04886077AA	1	1			EH0, EV0	DBB		
		1	5			EH0, EV0	DBB		
12									ISOLATOR, Shift Lever
	05012020AA	1	1			EH0, EV0	DBB		
		1	5			EH0, EV0	DBB		

DAKOTA (AN)

SERIES	LINE	BODY	ENGINE	TRANSMISSION
L = Quad Cab L = Regular Cab L = Club Cab	1 = Dakota 2WD 5 = Dakota 4WD	31 = CLUB CAB 2-DR 6.5 FT BOX 61 = REG CAB 6.5 FT BOX 84 = CREW CAB 4-DR W.B.1	EPO = 2.5L 4 Cyl. EHO = 3.9L 6 Cyl. EMO = 5.9L 8 Cyl. EVO = 4.7L Magnum EHC = 3.9L SMPI V6 EML = 5.9L V8 MPI Engine EPE = 2.5L POWER TECH I-4 Cyl. EVA = 4.7L V8 MPI	DDC = TRANSMISSION - 5-SPEED HD MANUAL DG4 = TRANSMISSION-MULTI-SPEED AUTO, 45RFE DGK = TRANSMISSION - 4-SPD. AUTOMATIC,42RE DGT = TRANSMISSION - 4-SPD. AUTOMATIC,46RE DGO = AUTO. TRANS.

Gearshift Controls [DDC]
Figure 3500-1210

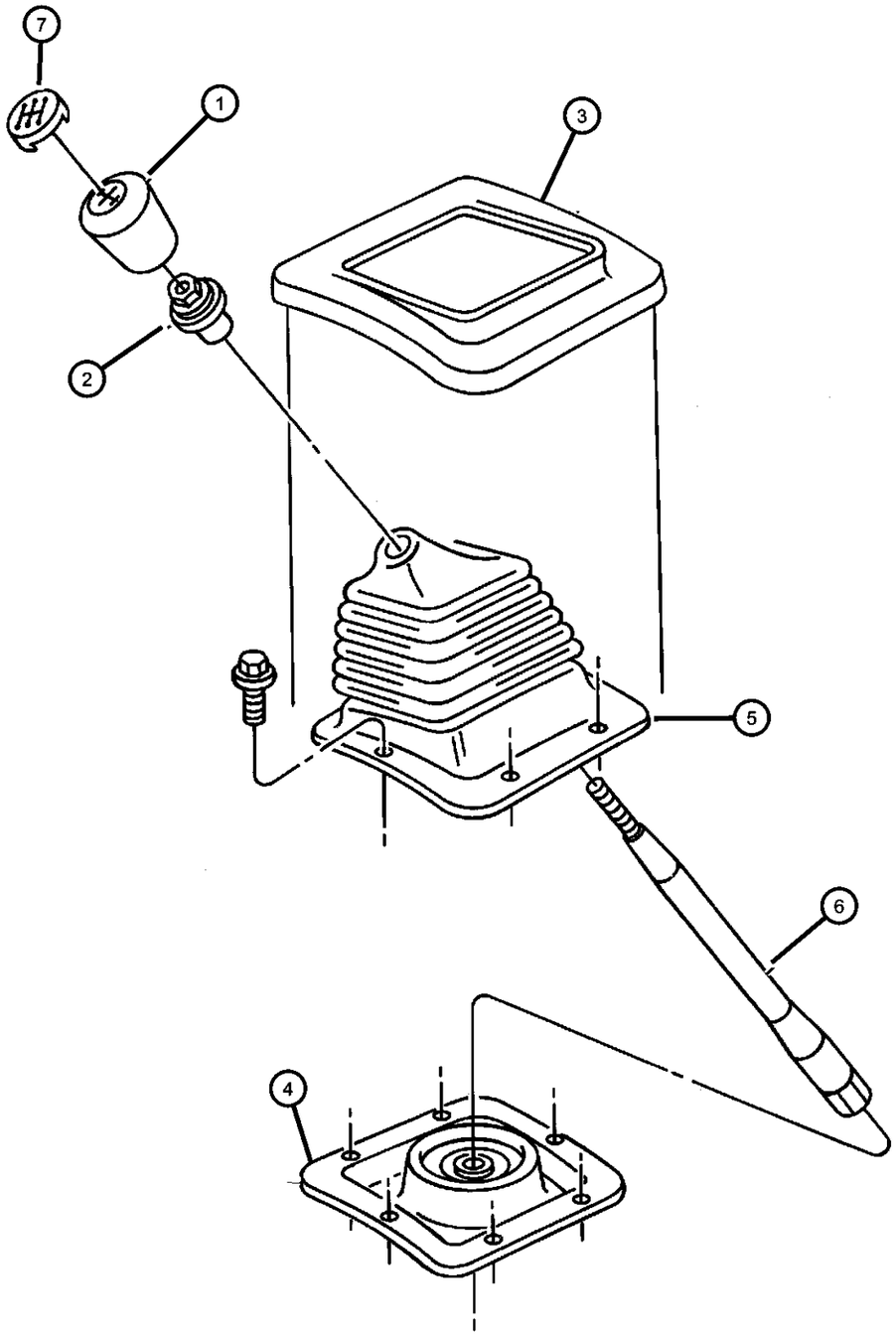

ITEM	PART NUMBER	QTY	LINE	SERIES	BODY	ENGINE	TRANS	TRIM	DESCRIPTION
DBB= All Manual Transmissions									
1	52104174	1					DBB		KNOB, Gearshift, Gear Shift Lever
2	06502556	1					DBB		NUT, Hex, M10-1.5, Gear Shift Control Selector Lever, M10x1.5
3									BEZEL, Gear Selector
	5FZ82LAZAB	1	1				DBB		Agate
	5FZ82RC3AB	1	1				DBB		Mist Gray
	5GE36LAZAC	1	5				DBB		Agate
	5GE36RC3AC	1	5				DBB		Mist Gray
4	52107765AA	1					DBB		BOOT, Gear Shift Lever
5	52078782	1					DBB		BOOT, Gearshift
6	52107690	1					DBB		LEVER, Gearshift
7	04446921	1					DBB		INSERT, Transmission Shift Knob, Shift Pattern

DAKOTA (AN)

SERIES	LINE	BODY	ENGINE	TRANSMISSION
L = Quad Cab	1 = Dakota 2WD	31 = CLUB CAB 2-DR 6.5 FT BOX	EPO = 2.5L 4 Cyl.	DDC = TRANSMISSION - 5-SPEED HD MANUAL
L = Regular Cab	5 = Dakota 4WD	61 = REG CAB 6.5 FT BOX	EHO = 3.9L 6 Cyl.	DG4 = TRANSMISSION-MULTI-SPEED AUTO, 45RFE
L = Club Cab		84 = CREW CAB 4-DR W.B.1	EMO = 5.9L 8 Cyl.	DGK = TRANSMISSION - 4-SPD. AUTOMATIC,42RE
			EVO = 4.7L Magnum	DGT = TRANSMISSION - 4-SPD. AUTOMATIC,46RE
			EHC = 3.9L SMPI V6	DGO = AUTO. TRANS.
			EML = 5.9L V8 MPI Engine	
			EPE = 2.5L POWER TECH I-4 Cyl.	
			EVA = 4.7L V8 MPI	

Group - NV1500

Manual Transmission 5 speed

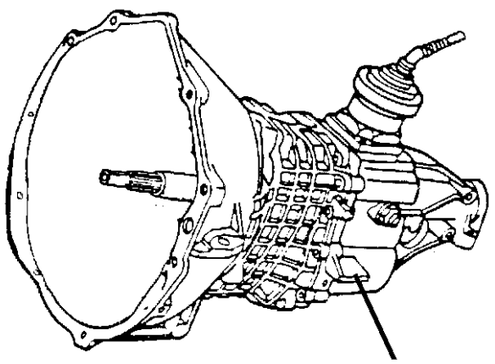

NV1500-100

NV1500-100 Transmission Assembly 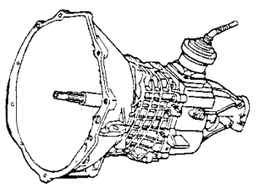	**NV1500-1200** Gearshift Controls 	**NV1500-200** Case and Extension 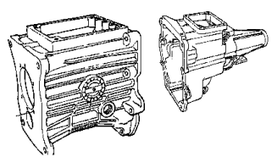	**NV1500-400** Gear Train 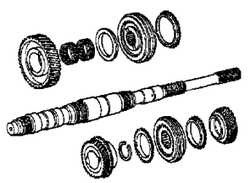
NV1500-900 Fork and Rails 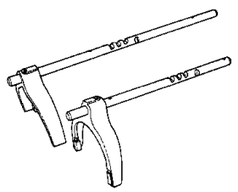			

Group - NV1500 Manual Transmission 5 speed

Illustration Title — Group-Fig. No.

Transmission Assembly
Transmission [NV 1500] [DDK] ..... Fig. NV1500 - 110

Case and Extension
Case and Extension [NV 1500] [DDK] ..... Fig. NV1500 - 210

Gear Train
Gear Train [NV 1500] [DDK] ..... Fig. NV1500 - 410

Fork and Rails
Fork and Rail [NV 1500] [DDK] ..... Fig. NV1500 - 910

Gearshift Controls
Gearshift Controls [NV 1500] [DDK] ..... Fig. NV1500 - 1210

Transmission [NV 1500] [DDK]
Figure NV1500-110

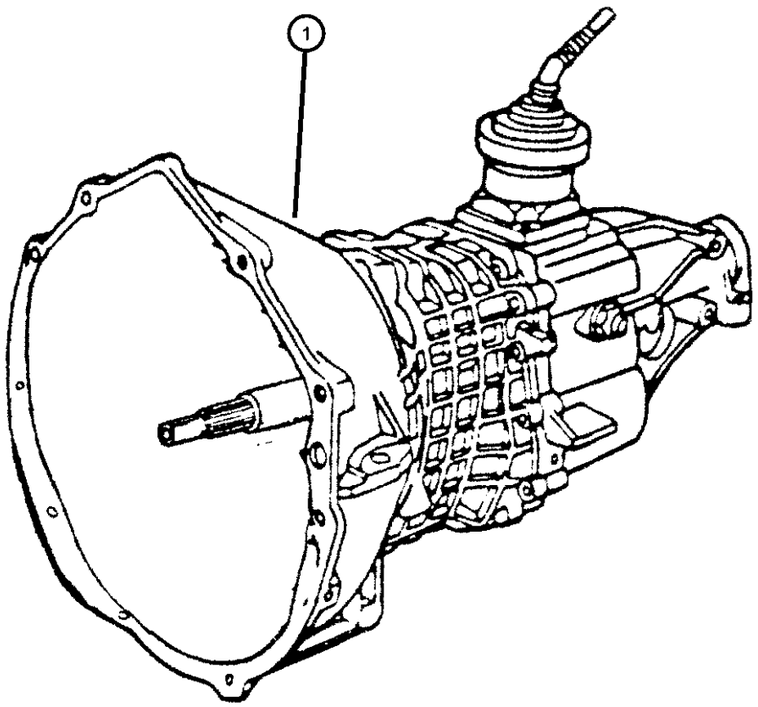

ITEM	PART NUMBER	QTY	LINE	SERIES	BODY	ENGINE	TRANS	TRIM	DESCRIPTION
EPE = 2.5L SMPI MAGNUM 4 Cyl Engine									
1	52108037	1	1			EP0	DDK		TRANSMISSION, 5 Speed
	04874464								Mopar Manual Transmission Fluid

DAKOTA (AN)

SERIES	LINE	BODY	ENGINE	TRANSMISSION
L = Quad Cab	1 = Dakota 2WD	31 = CLUB CAB 2-DR 6.5 FT BOX	EPO = 2.5L 4 Cyl.	DDC = TRANSMISSION - 5-SPEED HD MANUAL
L = Regular Cab	5 = Dakota 4WD	61 = REG CAB 6.5 FT BOX	EHO = 3.9L 6 Cyl.	DG4 = TRANSMISSION-MULTI-SPEED AUTO, 45RFE
L = Club Cab		84 = CREW CAB 4-DR W.B.1	EMO = 5.9L 8 Cyl.	DGK = TRANSMISSION - 4-SPD. AUTOMATIC,42RE
			EVO = 4.7L Magnum	DGT = TRANSMISSION - 4-SPD. AUTOMATIC,46RE
			EHC = 3.9L SMPI V6	DGO = AUTO. TRANS.
			EML = 5.9L V8 MPI Engine	
			EPE = 2.5L POWER TECH I-4 Cyl.	
			EVA = 4.7L V8 MPI	

Case and Extension [NV 1500] [DDK]
Figure NV1500-210

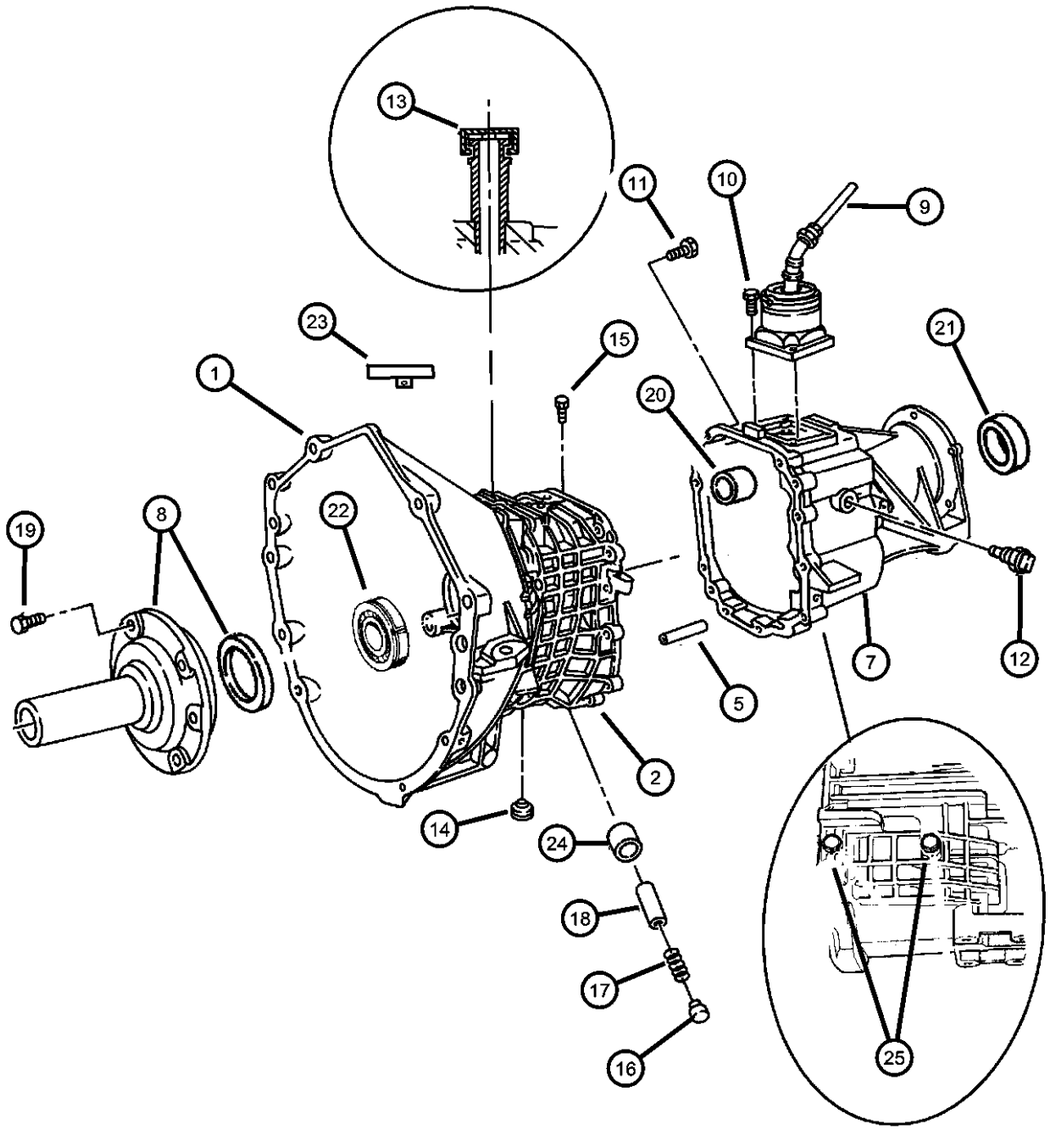

ITEM	PART NUMBER	QTY	LINE	SERIES	BODY	ENGINE	TRANS	TRIM	DESCRIPTION
EPE = 2.5L SMPI MAGNUM 4 Cyl Engine									
1	52107566AB	1	1			EP0	DBB		HOUSING, Clutch
2	05013311AA	1	1			EP0	DDK		CASE, Transmission
-3	04740899	AR	1			EP0	DDK		BUSHING, Shift Rail
-4	05013313AA	AR	1			EP0	DDK		CUP, Bearing Inner
5	05013314AA	2	1			EP0	DDK		DOWEL, Transmission Case
-6									SHIM
	05013315AA	AR	1			EP0	DDK		(0.50)
	05013316AA	AR	1			EP0	DDK		(0.54)
	05013317AA	AR	1			EP0	DDK		(0.58)
7	05013322AA	1	1			EP0	DDK		CASE, Transmission Rear
8	05013413AA	1	1			EP0	DDK		RETAINER, Shaft
9	05013354AA	1	1			EP0	DDK		LEVER, Gearshift
10	04741144	4	1			EP0	DDK		BOLT, Hex Head
11	04741123	10	1			EP0	DDK		BOLT, Hex Head, M8x1.25x50
12	56007163	1	1			EP0	DDK		SWITCH, Back Up Lamp
13	05013319AA	1	1			EP0	DDK		VENT, Transmission
14	04882280	AR	1			EP0	DDK		PLUG, Oil Fill
15	05013321AA	1	1			EP0	DDK		PIN, Detent
16	05013339AA	1	1			EP0	DDK		PLUG, Shift Rail
17	05013341AA	1	1			EP0	DDK		SPRING, Shift Detent
18	05015949AA	1	1			EP0	DDK		PLUNGER
19	05013338AA	10	1			EP0	DDK		BOLT, M8
20	05013338AA	10							BEARING, Ball, (NOT SERVICED)
21	05013332AA	1	1			EP0	DDK		SEAL, Extension Yoke
22	05013411AA	1	1			EP0	DDK		BEARING, Input Shaft
23	05013319AA	1	1			EP0	DDK		VENT, Transmission
24	05013319AA	1							BUSHING, Detent, (NOT SERVICED)
25	05013319AA	1							BOLT, (NOT SERVICED)

DAKOTA (AN)

SERIES	LINE	BODY	ENGINE	TRANSMISSION
L = Quad Cab L = Regular Cab L = Club Cab	1 = Dakota 2WD 5 = Dakota 4WD	31 = CLUB CAB 2-DR 6.5 FT BOX 61 = REG CAB 6.5 FT BOX 84 = CREW CAB 4-DR W.B.1	EPO = 2.5L 4 Cyl. EHO = 3.9L 6 Cyl. EMO = 5.9L 8 Cyl. EVO = 4.7L Magnum EHC = 3.9L SMPI V6 EML = 5.9L V8 MPI Engine EPE = 2.5L POWER TECH I-4 Cyl. EVA = 4.7L V8 MPI	DDC = TRANSMISSION - 5-SPEED HD MANUAL DG4 = TRANSMISSION-MULTI-SPEED AUTO, 45RFE DGK = TRANSMISSION - 4-SPD. AUTOMATIC,42RE DGT = TRANSMISSION - 4-SPD. AUTOMATIC,46RE DGO = AUTO. TRANS.

AR = use ase required - = Non illustrrated part

Gear Train [NV 1500] [DDK]
Figure NV1500-410

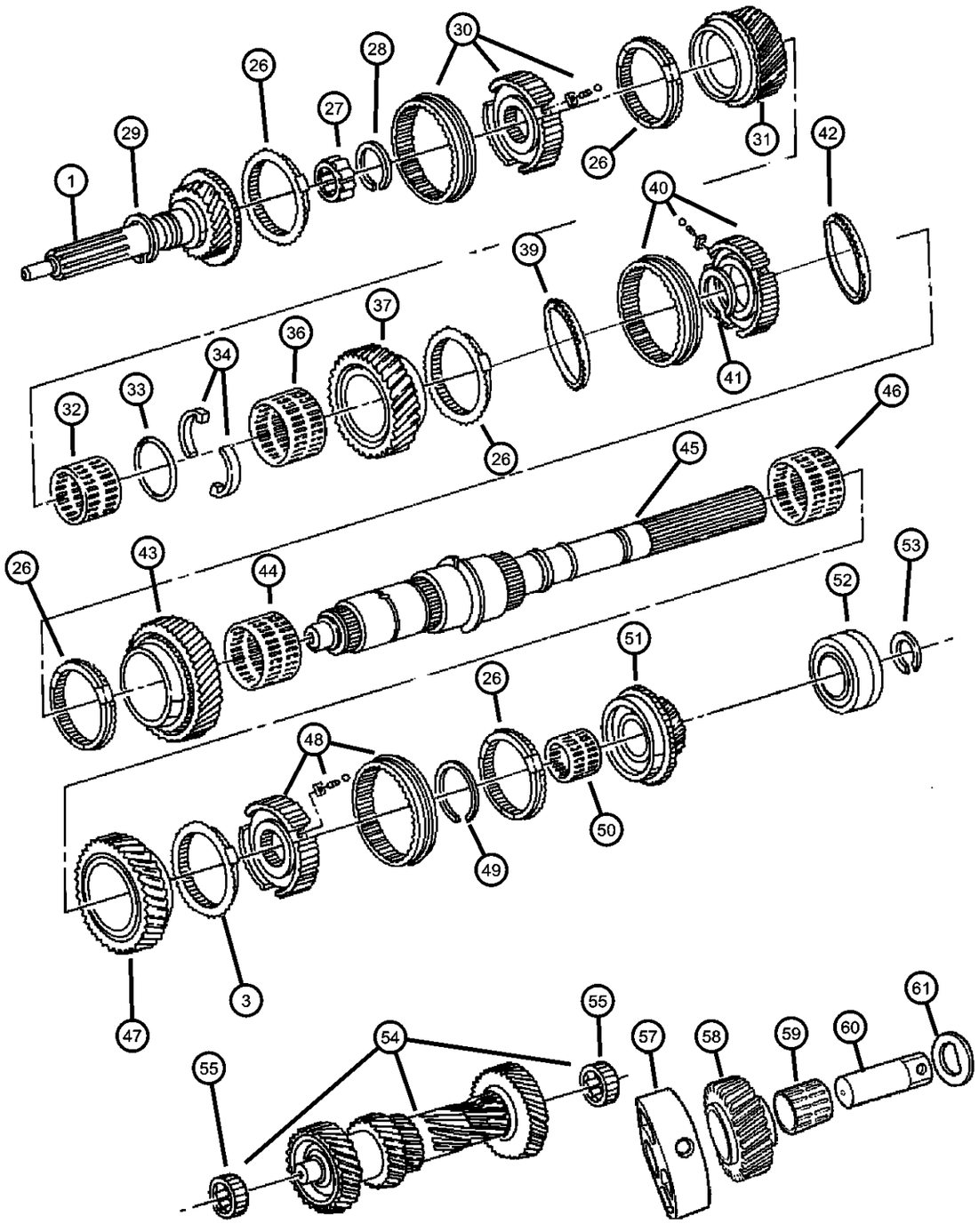

ITEM	PART NUMBER	QTY	LINE	SERIES	BODY	ENGINE	TRANS	TRIM	DESCRIPTION
EPE = 2.5L SMPI MAGNUM 4 Cyl Engine									
1	05013409AA	1	1			EP0	DDK		SHAFT, Input
-2	05013410AA	1	1			EP0	DDK		NEEDLE BEARING, Input Shaft
3	05013411AA	1	1			EP0	DDK		BEARING, Input Shaft
-4	04202751	AR	1			EP0	DDK		SPACER, Input Shaft, 0.62mm(.024")
-5	04202301	AR	1			EP0	DDK		SPACER, Input Shaft, 0.66mm(.026")
-6	04202302	AR	1			EP0	DDK		SPACER, Input Shaft, 0.70mm(.028")
-7	04202303	AR	1			EP0	DDK		SPACER, Input Shaft, 0.74mm(.029")
-8	04202304	AR	1			EP0	DDK		SPACER, Input Shaft, 0.78mm(.031")
-9	04202307	AR	1			EP0	DDK		SPACER, Input Shaft, 0.90mm(.035")
-10	04202308	AR	1			EP0	DDK		SPACER, Input Shaft, 0.94mm(.037")
-11	04202309	AR	1			EP0	DDK		SPACER, Input Shaft, 0.98mm(.039")
-12	04202310	AR	1			EP0	DDK		SPACER, Input Shaft, 1.02mm(.040")
-13	04202311	AR	1			EP0	DDK		SPACER, Input Shaft, 1.06mm(.042")
-14	04202312	AR	1			EP0	DDK		SPACER, Input Shaft, 1.10mm(.043")
-15	04202313	AR	1			EP0	DDK		SPACER, Input Shaft, 1.14mm(.045")
-16	04202314	AR	1			EP0	DDK		SPACER, Input Shaft, 1.18mm(.046")
-17	04202315	AR	1			EP0	DDK		SPACER, Input Shaft, 1.22mm(.048")
-18	04202316	AR	1			EP0	DDK		SPACER, Input Shaft, 1.26mm(.050")
-19	04202317	AR	1			EP0	DDK		SPACER, Input Shaft, 1.30mm(.051")
-20	04202318	AR	1			EP0	DDK		SPACER, Input Shaft, 1.34mm(.053")
-21	04202319	AR	1			EP0	DDK		SPACER, Input Shaft, 1,38mm(.054")
-22	04202320	AR	1			EP0	DDK		SPACER, Input Shaft, 1.42mm(,056")

DAKOTA (AN)

SERIES	LINE	BODY	ENGINE	TRANSMISSION
L = Quad Cab L = Regular Cab L = Club Cab	1 = Dakota 2WD 5 = Dakota 4WD	31 = CLUB CAB 2-DR 6.5 FT BOX 61 = REG CAB 6.5 FT BOX 84 = CREW CAB 4-DR W.B.1	EPO = 2.5L 4 Cyl. EHO = 3.9L 6 Cyl. EMO = 5.9L 8 Cyl. EVO = 4.7L Magnum EHC = 3.9L SMPI V6 EML = 5.9L V8 MPI Engine EPE = 2.5L POWER TECH I-4 Cyl. EVA = 4.7L V8 MPI	DDC = TRANSMISSION - 5-SPEED HD MANUAL DG4 = TRANSMISSION-MULTI-SPEED AUTO, 45RFE DGK = TRANSMISSION - 4-SPD. AUTOMATIC,42RE DGT = TRANSMISSION - 4-SPD. AUTOMATIC,46RE DGO = AUTO. TRANS.

AR = use ase required - = Non illustrrated part

Gear Train [NV 1500] [DDK]
Figure NV1500-410

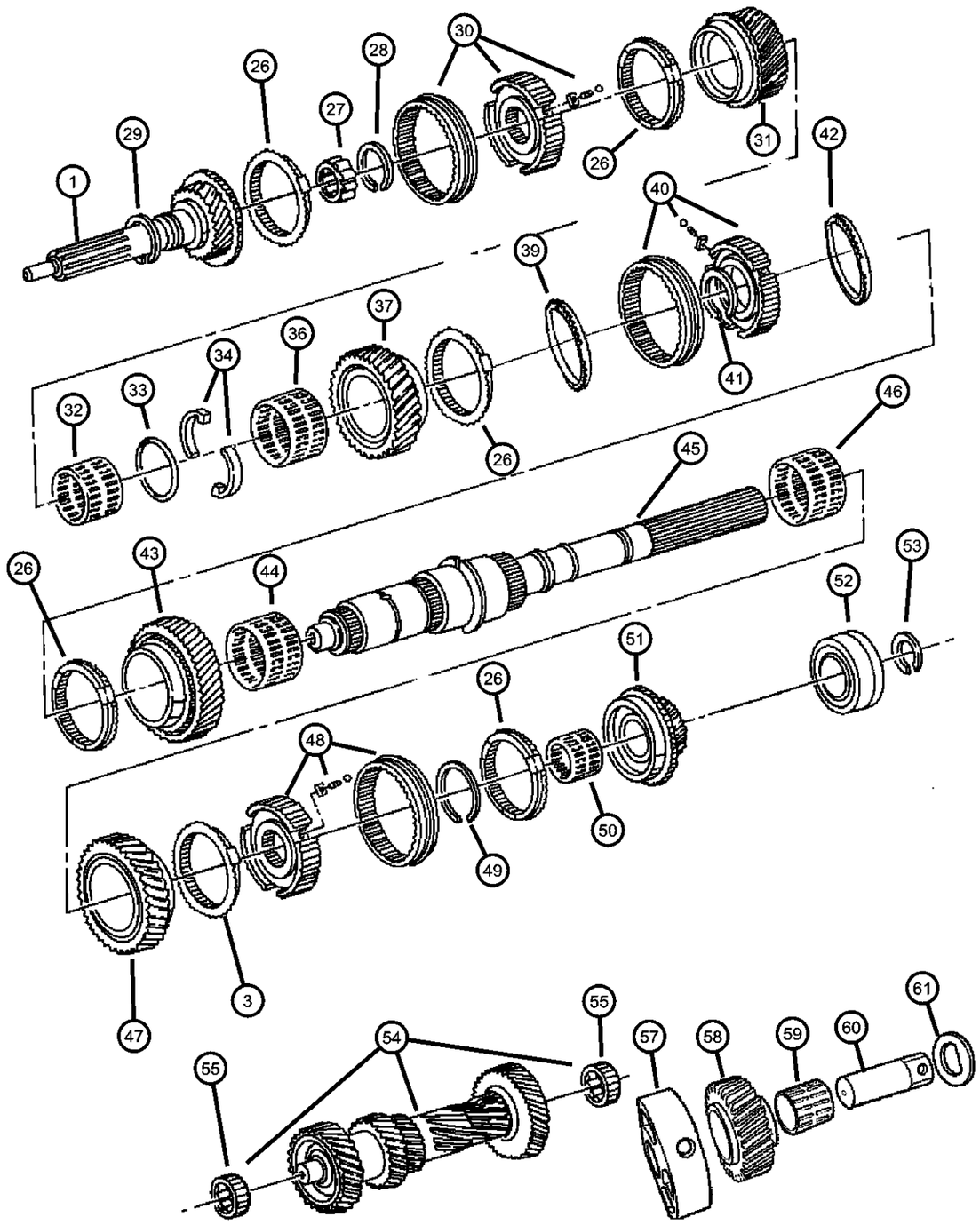

ITEM	PART NUMBER	QTY	LINE	SERIES	BODY	ENGINE	TRANS	TRIM	DESCRIPTION
-23	04202321	AR	1			EP0	DDK		SPACER, Input Shaft, 1.46mm(.057")
-24	04202322	AR	1			EP0	DDK		SPACER, Input Shaft, 1.50mm(.059")
-25	04202323	AR	1			EP0	DDK		SPACER, Input Shaft, 1.54mm(.061")
26	05013368AA	AR	1			EP0	DDK		RING, Synchronizer Blocker
27	05013410AA	1	1			EP0	DDK		NEEDLE BEARING, Input Shaft
28	05013318AA	2	1			EP0	DDK		SNAP RING PACKAGE, Fifth Gear
29	05013379AA	1	1			EP0	DDK		RING, Snap
30	05013367AA	2	1			EP0	DDK		SYNCHRONIZER, Fifth And Reverse
31	05013400AA	1	1			EP0	DDK		GEAR, Third
32	05013365AA	3	1			EP0	DDK		BEARING, Needle
33	05013397AA	1	1			EP0	DDK		SNAP RING
34	05013398AA	2	1			EP0	DDK		WASHER, Output Shaft
-35	05013378AA	1	1			EP0	DDK		PIN
36	05013365AA	3	1			EP0	DDK		BEARING, Needle
37	05013395AA	1	1			EP0	DDK		GEAR, Second
-38	05013390AA	1	1			EP0	DDK		SNAP RING PACKAGE, Transmission
39	05013385AA	2	1			EP0	DDK		RING, 1st and 2nd Speed Blocker
40	05013386AA	1	1			EP0	DDK		SYNCHRONIZER, First and Second
41	05013390AA	1	1			EP0	DDK		SNAP RING PACKAGE, Transmission
42	05013385AA	2	1			EP0	DDK		RING, 1st and 2nd Speed Blocker
43	05013380AA	1	1			EP0	DDK		GEAR, First
44	05013381AA	1	1			EP0	DDK		BEARING, First Gear
45	05013360AA	1	1			EP0	DDK		SHAFT, Output
46	05013365AA	3	1			EP0	DDK		BEARING, Needle
47	05013364AA	1	1			EP0	DDK		GEAR, Reverse
48	05013367AA	2	1			EP0	DDK		SYNCHRONIZER, Fifth And Reverse
49	05013318AA	2	1			EP0	DDK		SNAP RING PACKAGE, Fifth Gear
50	05013375AA	1	1			EP0	DDK		BEARING, Needle

DAKOTA (AN)

SERIES	LINE	BODY	ENGINE	TRANSMISSION
L = Quad Cab	1 = Dakota 2WD	31 = CLUB CAB 2-DR 6.5 FT BOX	EPO = 2.5L 4 Cyl.	DDC = TRANSMISSION - 5-SPEED HD MANUAL
L = Regular Cab	5 = Dakota 4WD	61 = REG CAB 6.5 FT BOX	EHO = 3.9L 6 Cyl.	DG4 = TRANSMISSION-MULTI-SPEED AUTO, 45RFE
L = Club Cab		84 = CREW CAB 4-DR W.B.1	EMO = 5.9L 8 Cyl.	DGK = TRANSMISSION - 4-SPD. AUTOMATIC,42RE
			EVO = 4.7L Magnum	DGT = TRANSMISSION - 4-SPD. AUTOMATIC,46RE
			EHC = 3.9L SMPI V6	DGO = AUTO. TRANS.
			EML = 5.9L V8 MPI Engine	
			EPE = 2.5L POWER TECH I-4 Cyl.	
			EVA = 4.7L V8 MPI	

AR = use ase required - = Non illustrrated part

Gear Train [NV 1500] [DDK]
Figure NV1500-410

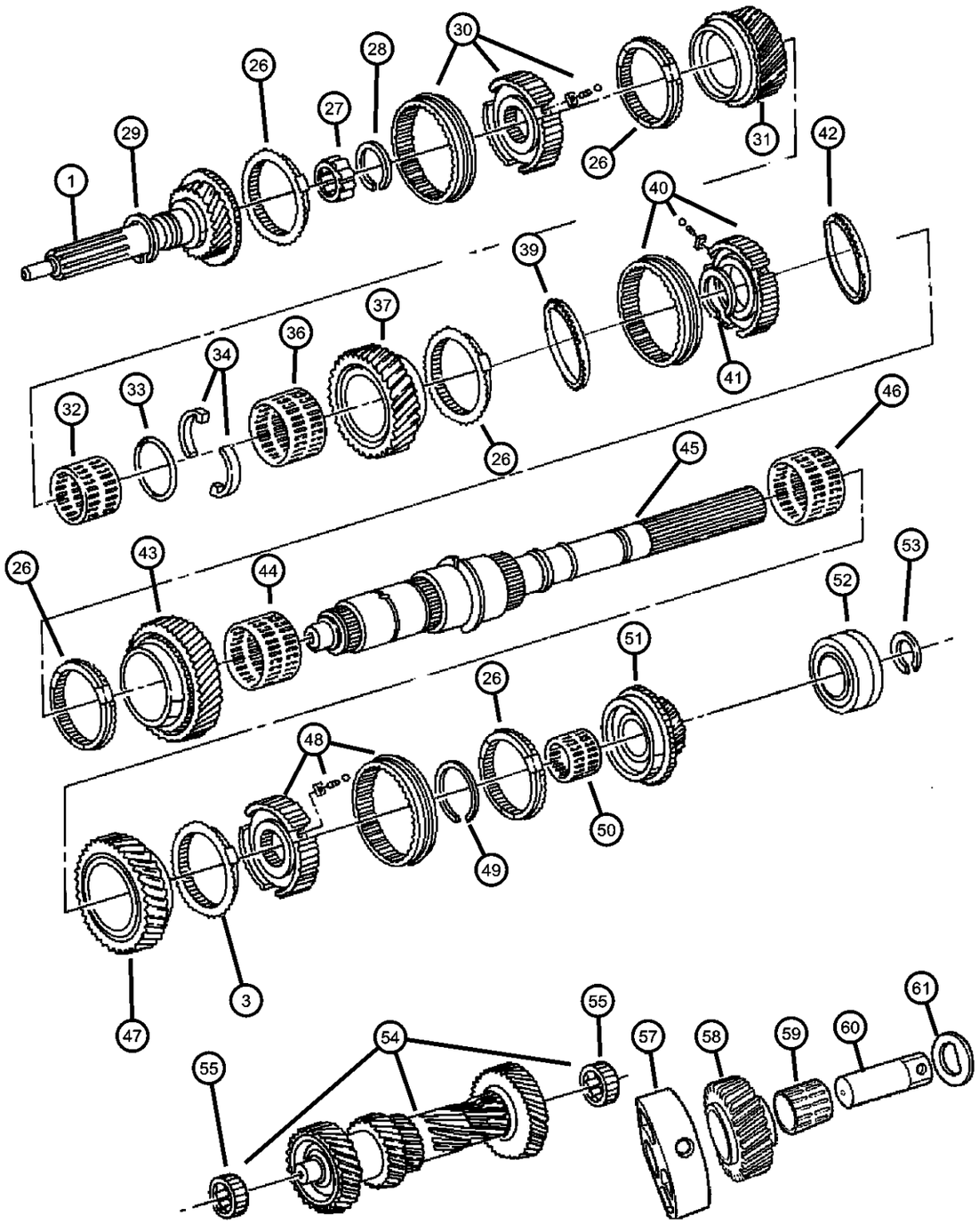

ITEM	PART NUMBER	QTY	LINE	SERIES	BODY	ENGINE	TRANS	TRIM	DESCRIPTION
51	05013373AA	1	1			EP0	DDK		GEAR, Fifth
52	05013376AA	1	1			EP0	DDK		BEARING, Output Shaft
53	05013377AA	1	1			EP0	DDK		SNAP RING, Output Shaft Bearing
54	05013414AA	1	1			EP0	DDK		SHAFT, Counter
55	05013416AA	2	1			EP0	DDK		CONE ASSEMBLY, Countershaft
-56	04419650	AR	1			EP0	DDK		SHIM PACKAGE, Countershaft
57	05127544AA	1	1			EP0	DDK		SUPPORT, Segment Idler Shaft
58	05127539AA	1	1			EP0	DDK		GEAR, Reverse Idler
59	05013417AA	1	1			EP0	DDK		BEARING, Idler
60	05127512AA	1	1			EP0	DDK		IDLER SHAFT, Transmission
61	05127545AA	1	1			EP0	DDK		WASHER, Reverse Idler

DAKOTA (AN)

SERIES	LINE	BODY	ENGINE	TRANSMISSION
L = Quad Cab L = Regular Cab L = Club Cab	1 = Dakota 2WD 5 = Dakota 4WD	31 = CLUB CAB 2-DR 6.5 FT BOX 61 = REG CAB 6.5 FT BOX 84 = CREW CAB 4-DR W.B.1	EPO = 2.5L 4 Cyl. EHO = 3.9L 6 Cyl. EMO = 5.9L 8 Cyl. EVO = 4.7L Magnum EHC = 3.9L SMPI V6 EML = 5.9L V8 MPI Engine EPE = 2.5L POWER TECH I-4 Cyl. EVA = 4.7L V8 MPI	DDC = TRANSMISSION - 5-SPEED HD MANUAL DG4 = TRANSMISSION-MULTI-SPEED AUTO, 45RFE DGK = TRANSMISSION - 4-SPD. AUTOMATIC,42RE DGT = TRANSMISSION - 4-SPD. AUTOMATIC,46RE DGO = AUTO. TRANS.

AR = use ase required - = Non illustrrated part

<< RETURN TO GROUP INDEX

Fork and Rail [NV 1500] [DDK]
Figure NV1500-910

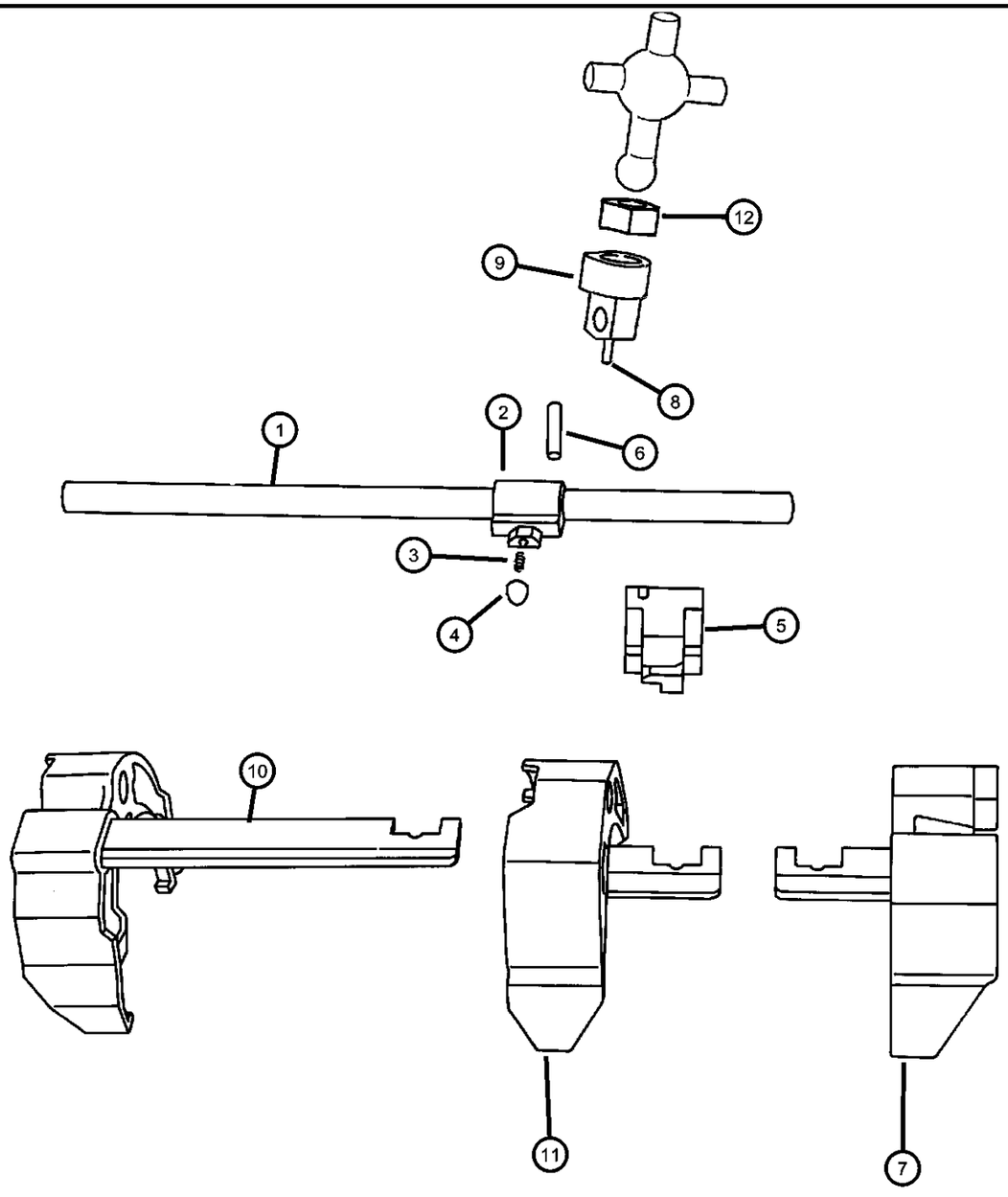

ITEM	PART NUMBER	QTY	LINE	SERIES	BODY	ENGINE	TRANS	TRIM	DESCRIPTION
EPE = 2.5L SMPI MAGNUM 4 Cyl Engine									
1	05013346AA	1	1			EP0	DDK		SHAFT, Shift Lever
2	05013347AA	1	1			EP0	DDK		LEVER, Shift Shaft
3	04741137	3	1			EH0, EV0			SPRING, Lever
4	05015949AA	1	1			EP0	DDK		PLUNGER
5	05013350AA	1	1			EP0	DDK		BUSHING, Transmission
6	04741138	1	1			EP0	DDK		PIN, Shift Shaft
7	05013344AA	1	1			EP0	DDK		FORK, Third and Fourth
8	04741139	1	1			EP0	DDK		PIN, Shift Shaft
9	04874352	1	1			EP0	DDK		SOCKET, Shift Shaft
10	05013345AA	1	1			EP0	DDK		FORK, Fifth Shift
11	05013343AA	1	1			EP0	DDK		FORK, First and Second
12	05012020AA	1	1			EP0	DDK		ISOLATOR, Shift Lever

DAKOTA (AN)

SERIES	LINE	BODY	ENGINE	TRANSMISSION
L = Quad Cab	1 = Dakota 2WD	31 = CLUB CAB 2-DR 6.5 FT BOX	EPO = 2.5L 4 Cyl.	DDC = TRANSMISSION - 5-SPEED HD MANUAL
L = Regular Cab	5 = Dakota 4WD	61 = REG CAB 6.5 FT BOX	EHO = 3.9L 6 Cyl.	DG4 = TRANSMISSION-MULTI-SPEED AUTO, 45RFE
L = Club Cab		84 = CREW CAB 4-DR W.B.1	EMO = 5.9L 8 Cyl.	DGK = TRANSMISSION - 4-SPD. AUTOMATIC,42RE
			EVO = 4.7L Magnum	DGT = TRANSMISSION - 4-SPD. AUTOMATIC,46RE
			EHC = 3.9L SMPI V6	DGO = AUTO. TRANS.
			EML = 5.9L V8 MPI Engine	
			EPE = 2.5L POWER TECH I-4 Cyl.	
			EVA = 4.7L V8 MPI	

Gearshift Controls [NV 1500] [DDK]
Figure NV1500-1210

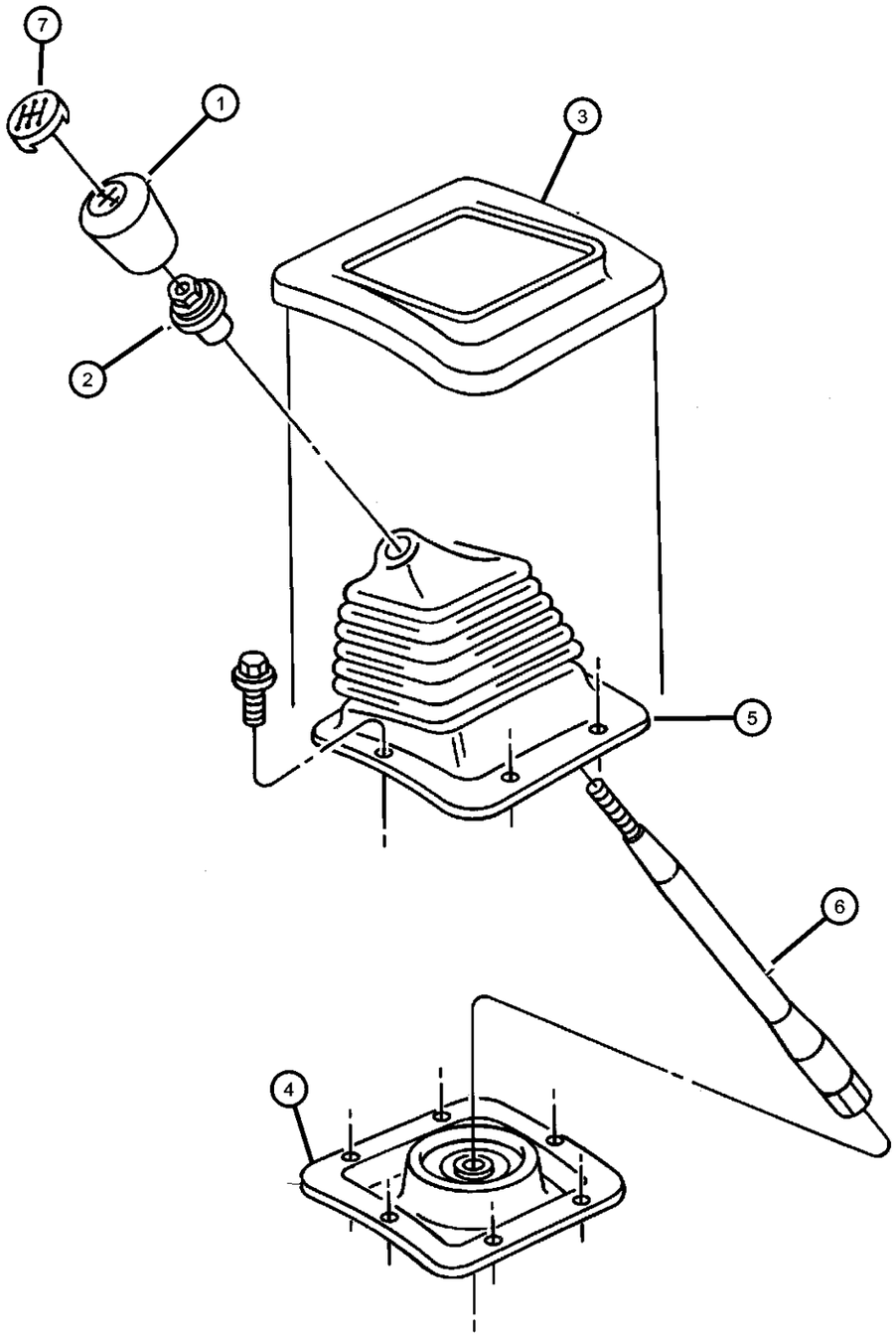

ITEM	PART NUMBER	QTY	LINE	SERIES	BODY	ENGINE	TRANS	TRIM	DESCRIPTION
EPE = 2.5L SMPI MAGNUM 4 Cyl Engine									
1	52104174	1					DBB		KNOB, Gearshift
2	06502556	1					DBB		NUT, Hex, M10-1.5
3									BEZEL, Gear Selector
	5FZ82LAZAB	1	1				DBB		Agate
	5FZ82RC3AB	1	1				DBB		Gray
	5GE36LAZAC	1	5				DBB		Agate
	5GE36RC3AC	1	5				DBB		Gray
4	52107765AA	1					DBB		BOOT, Gear Shift Lever, Plate and Boot, Lower
5	52078782	1					DBB		BOOT, GearshiftUpper
6									LEVER, Gearshift
	04886156AA	1	5			EH0, EV0	DBB		
	05013354AA	1	1			EP0	DDK		
7	04446921	1					DBB		INSERT, Transmission Shift Knob

DAKOTA (AN)

SERIES	LINE	BODY	ENGINE	TRANSMISSION
L = Quad Cab	1 = Dakota 2WD	31 = CLUB CAB 2-DR 6.5 FT BOX	EPO = 2.5L 4 Cyl.	DDC = TRANSMISSION - 5-SPEED HD MANUAL
L = Regular Cab	5 = Dakota 4WD	61 = REG CAB 6.5 FT BOX	EHO = 3.9L 6 Cyl.	DG4 = TRANSMISSION-MULTI-SPEED AUTO, 45RFE
L = Club Cab		84 = CREW CAB 4-DR W.B.1	EMO = 5.9L 8 Cyl.	DGK = TRANSMISSION - 4-SPD. AUTOMATIC,42RE
			EVO = 4.7L Magnum	DGT = TRANSMISSION - 4-SPD. AUTOMATIC,46RE
			EHC = 3.9L SMPI V6	DGO = AUTO. TRANS.
			EML = 5.9L V8 MPI Engine	
			EPE = 2.5L POWER TECH I-4 Cyl.	
			EVA = 4.7L V8 MPI	

Group - 231

Transfer Case Model 231 [DHJ, DHK, DHN]

231-100 Transfer Case Assembly 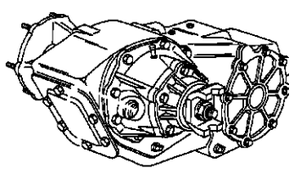	**231-1200** Gearshift Controls 	**231-200** Case and Related Parts 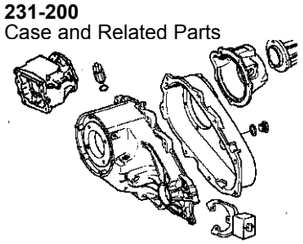	**231-400** Gear Train 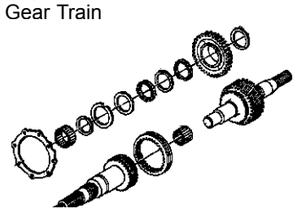
231-900 Fork and Rails 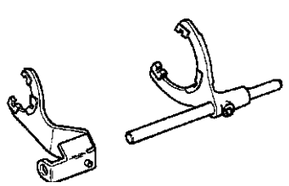			

Group - 231 Transfer Case Model 231 [DHJ, DHK, DHN]

Illustration Title — Group-Fig. No.

Transfer Case Assembly
Transfer Case Shift on the Fly [DHK] ..... Fig. 231 - 110

Case and Related Parts
Case and Related Parts Shift on the Fly [DHK] ..... Fig. 231 - 210

Gear Train
Gear Train Shift on the Fly [DHK] ..... Fig. 231 - 410

Fork and Rails
Fork and Rails Shift on the Fly [DHK] [DHJ] ..... Fig. 231 - 910

Gearshift Controls
Gearshift Controls Shift on the Fly [DHK] ..... Fig. 231 - 1210

Transfer Case Shift on the Fly [DHK]
Figure 231-110

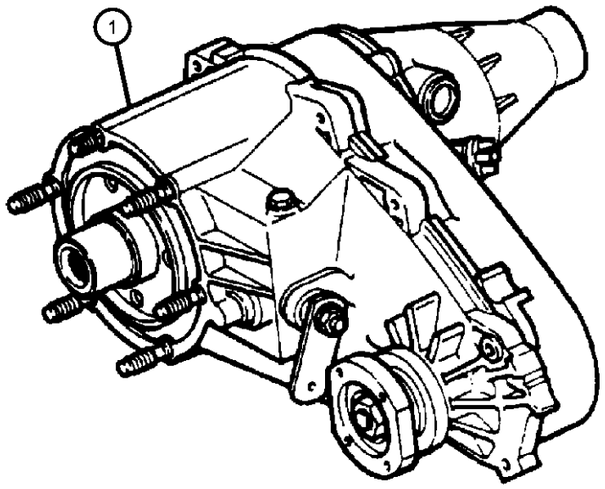

ITEM	PART NUMBER	QTY	LINE	SERIES	BODY	ENGINE	TRANS	TRIM	DESCRIPTION
EHC = 3.9L MAGNUM V6 Engine ELF = 5.2L SMPI MAGNUM 8 Cyl Engine EML = 5.9L SMPI MANGUM V8 Engine DDC= NV 3500 HD Manual Transmission 5 Speed DDQ = Aisin Manual Transmission 5 Speed DGK = 42RE Automatic Transmission DGW = 44RE Automatic Transmission									
1									TRANSFER CASE, NP231
	52105407AD	1	5			EH0, EM0, EV0	DBB		
	52105674AC	1	5			EH0, EM0, EV0	DG0		

DAKOTA (AN)

SERIES	LINE	BODY	ENGINE	TRANSMISSION
L = Quad Cab L = Regular Cab L = Club Cab	1 = Dakota 2WD 5 = Dakota 4WD	31 = CLUB CAB 2-DR 6.5 FT BOX 61 = REG CAB 6.5 FT BOX 84 = CREW CAB 4-DR W.B.1	EPO = 2.5L 4 Cyl. EHO = 3.9L 6 Cyl. EMO = 5.9L 8 Cyl. EVO = 4.7L Magnum EHC = 3.9L SMPI V6 EML = 5.9L V8 MPI Engine EPE = 2.5L POWER TECH I-4 Cyl. EVA = 4.7L V8 MPI	DDC = TRANSMISSION - 5-SPEED HD MANUAL DG4 = TRANSMISSION-MULTI-SPEED AUTO, 45RFE DGK = TRANSMISSION - 4-SPD. AUTOMATIC,42RE DGT = TRANSMISSION - 4-SPD. AUTOMATIC,46RE DGO = AUTO. TRANS.

Case and Related Parts Shift on the Fly [DHK]
Figure 231-210

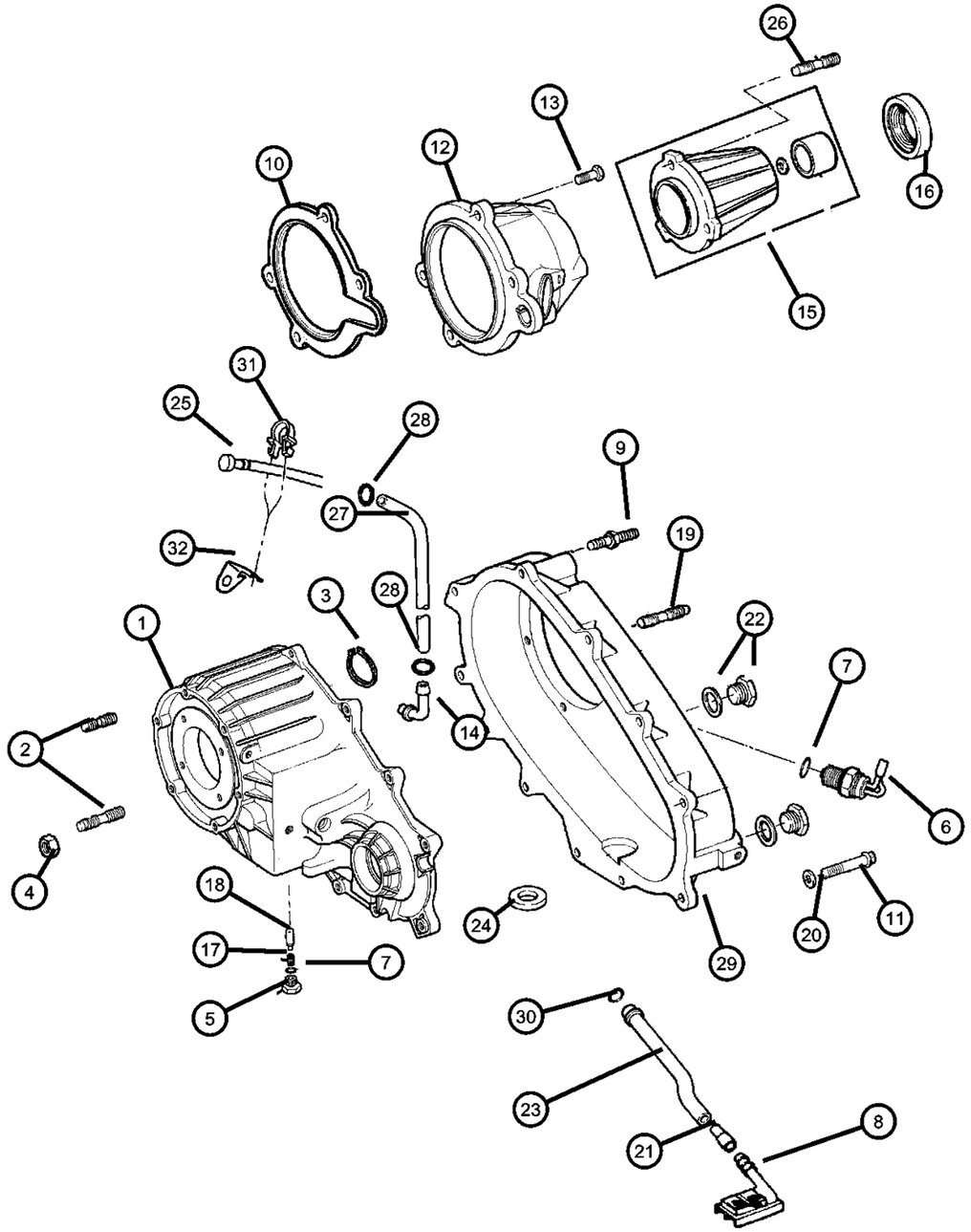

ITEM	PART NUMBER	QTY	LINE	SERIES	BODY	ENGINE	TRANS	TRIM	DESCRIPTION
EHC = 3.9L MAGNUM V6 Engine ELF = 5.2L SMPI MAGNUM 8 Cyl Engine EML = 5.9L SMPI MAGNUM V8 Engine DDC= NV 3500 HD Manual Transmission 5 Speed DDQ = Aisin Manual Transmission 5 Speed DGK = 42RE Automatic Transmission DGW = 44RE Automatic Transmission									
1									CASE, Transfer Front
	05015430AA	1	5			EH0, EM0, EV0	DBB		
		1	5			EH0, EM0, EV0	DG0		
2									STUD
	04505365	6	5			EM0, EV0			
		6	5			EH0, EM0, EV0	DBB		
		6	5			EH0, EM0, EV0	DG0		
3									SNAP RING, Annulus Gear
	04219065	1	5			EH0	DG0		
		1	5			EM0, EV0			
		1	5			EH0, EM0, EV0	DBB		
		1	5			EH0, EM0, EV0	DG0		
4	06033172	6	5						NUT AND WASHER, Hex, .375-24
5									SCREW
	04886473AA	1	5			EM0, EV0			
		1	5			EH0, EM0, EV0	DBB		
		1	5			EH0, EM0, EV0	DG0		
6									SWITCH, Transfer Case Mode
	J8134473	1	5			EM0, EV0			
		1	5			EH0, EM0, EV0	DBB		
		1	5			EH0, EM0, EV0	DG0		
7									SEAL, Vacuum Switch
	04338956	1	5			EM0, EV0			

DAKOTA (AN)

SERIES	LINE	BODY	ENGINE	TRANSMISSION
L = Quad Cab L = Regular Cab L = Club Cab	1 = Dakota 2WD 5 = Dakota 4WD	31 = CLUB CAB 2-DR 6.5 FT BOX 61 = REG CAB 6.5 FT BOX 84 = CREW CAB 4-DR W.B.1	EPO = 2.5L 4 Cyl. EHO = 3.9L 6 Cyl. EMO = 5.9L 8 Cyl. EVO = 4.7L Magnum EHC = 3.9L SMPI V6 EML = 5.9L V8 MPI Engine EPE = 2.5L POWER TECH I-4 Cyl. EVA = 4.7L V8 MPI	DDC = TRANSMISSION - 5-SPEED HD MANUAL DG4 = TRANSMISSION-MULTI-SPEED AUTO, 45RFE DGK = TRANSMISSION - 4-SPD. AUTOMATIC,42RE DGT = TRANSMISSION - 4-SPD. AUTOMATIC,46RE DGO = AUTO. TRANS.

Case and Related Parts Shift on the Fly [DHK]
Figure 231-210

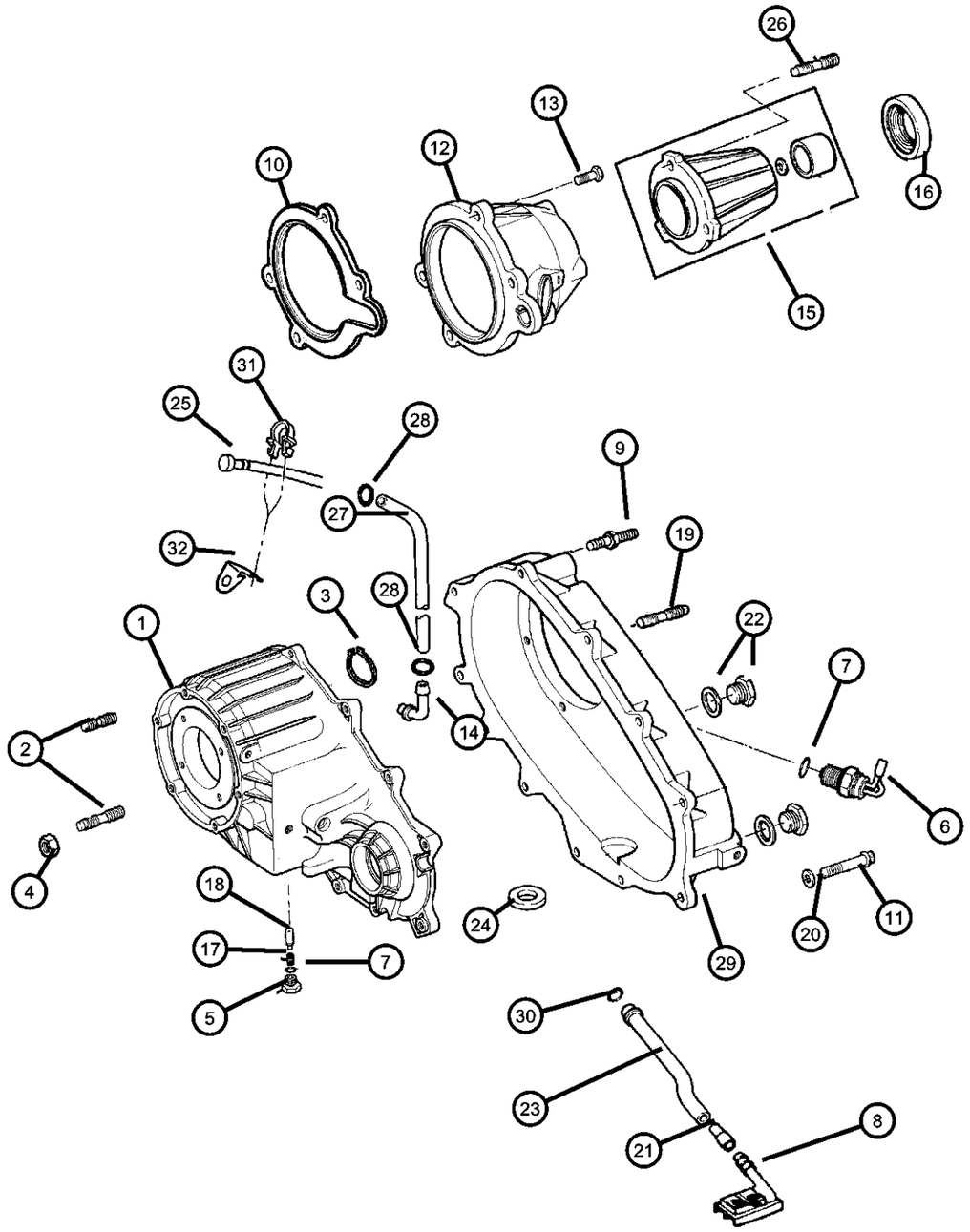

ITEM	PART NUMBER	QTY	LINE	SERIES	BODY	ENGINE	TRANS	TRIM	DESCRIPTION
		1	5			EH0, EM0, EV0	DBB		
		1	5			EH0, EM0, EV0	DG0		
8									FILTER, Transfer Case Oil
	04338943	1	5			EM0, EV0			
		1	5			EH0, EM0, EV0	DBB		
		1	5			EH0, EM0, EV0	DG0		
9									BOLT, Transfer Case
	04210617	9	5			EH0, EM0, EV0	DBB		
		9	5			EH0, EM0, EV0	DG0		
10									GASKET, Transfer Case
	04897958AA	1	5			EH0, EM0, EV0	DBB		
		1	5			EH0, EM0, EV0	DG0		
11									BOLT, Hex Flange Head
	04210614	1	5			EH0, EM0, EV0	DBB		
		1	5			EH0, EM0, EV0	DG0		
12									RETAINER, Transfer Case Rear
	04897956AA	1	5			EH0, EM0, EV0	DBB		
		1	5			EH0, EM0, EV0	DG0		
13									BOLT
	06500318	9	5			EH0, EM0, EV0	DBB		
		9	5			EH0, EM0, EV0	DG0		
14									VENT, Transfer Case
	04796910	1	5			EH0, EM0, EV0	DBB		
		1	5			EH0, EM0, EV0	DG0		
15									EXTENSION, Transfer Case

DAKOTA (AN)

SERIES	LINE	BODY	ENGINE	TRANSMISSION
L = Quad Cab L = Regular Cab L = Club Cab	1 = Dakota 2WD 5 = Dakota 4WD	31 = CLUB CAB 2-DR 6.5 FT BOX 61 = REG CAB 6.5 FT BOX 84 = CREW CAB 4-DR W.B.1	EPO = 2.5L 4 Cyl. EHO = 3.9L 6 Cyl. EMO = 5.9L 8 Cyl. EVO = 4.7L Magnum EHC = 3.9L SMPI V6 EML = 5.9L V8 MPI Engine EPE = 2.5L POWER TECH I-4 Cyl. EVA = 4.7L V8 MPI	DDC = TRANSMISSION - 5-SPEED HD MANUAL DG4 = TRANSMISSION-MULTI-SPEED AUTO, 45RFE DGK = TRANSMISSION - 4-SPD. AUTOMATIC,42RE DGT = TRANSMISSION - 4-SPD. AUTOMATIC,46RE DGO = AUTO. TRANS.

AR = use ase required - = Non illustrrated part

Case and Related Parts Shift on the Fly [DHK]
Figure 231-210

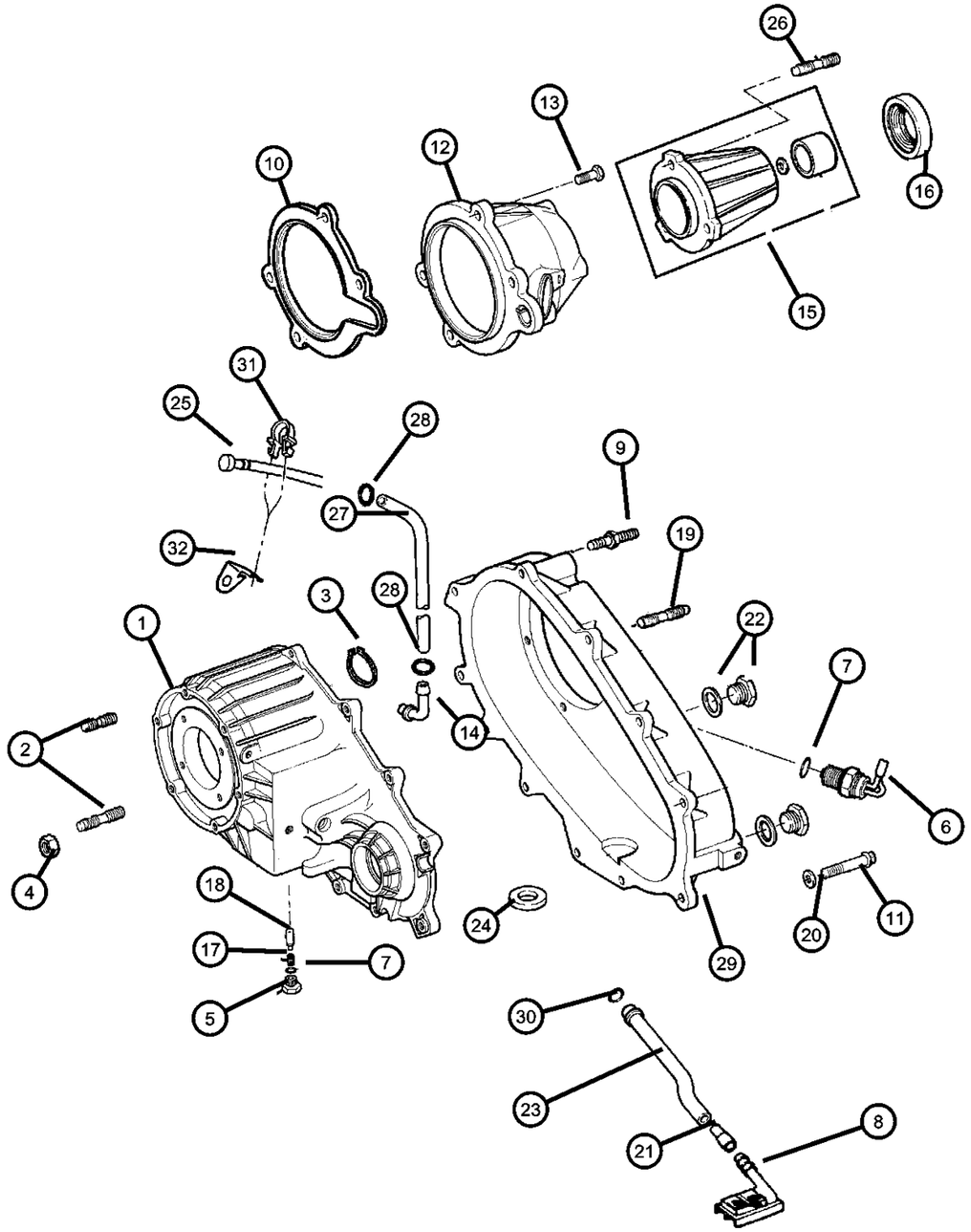

ITEM	PART NUMBER	QTY	LINE	SERIES	BODY	ENGINE	TRANS	TRIM	DESCRIPTION
	05003457AA	1	5			EH0, EM0, EV0	DBB		
		1	5			EH0, EM0, EV0	DG0		
16									SEAL, Output Shaft
	05003419AA	1	5			EH0, EM0, EV0	DBB		
		1	5			EH0, EM0, EV0	DG0		
17									SPRING, Shift Detent
	04638497	1	5			EH0, EM0, EV0	DBB		
		1	5			EH0, EM0, EV0	DG0		
18									PLUNGER
	53008217	1	5			EH0, EM0, EV0	DBB		
		1	5			EH0, EM0, EV0	DG0		
19									STUD
	06501289	2	5			EH0, EM0, EV0	DBB		
		2	5			EH0, EM0, EV0	DG0		
20									WASHER, Flat
	04210983	2	5			EH0, EM0, EV0	DBB		
		2	5			EH0, EM0, EV0	DG0		
21									CONNECTOR, Oil Tube Pickup
	04338944	1	5			EH0, EM0, EV0	DBB		
		1	5			EH0, EM0, EV0	DG0		
22									PLUG, Oil Fill
	04856641	2	5			EH0, EM0, EV0	DBB		
		2	5			EH0, EM0, EV0	DG0		
23									TUBE, Oil Pickup

DAKOTA (AN)

SERIES	LINE	BODY	ENGINE	TRANSMISSION
L = Quad Cab L = Regular Cab L = Club Cab	1 = Dakota 2WD 5 = Dakota 4WD	31 = CLUB CAB 2-DR 6.5 FT BOX 61 = REG CAB 6.5 FT BOX 84 = CREW CAB 4-DR W.B.1	EPO = 2.5L 4 Cyl. EHO = 3.9L 6 Cyl. EMO = 5.9L 8 Cyl. EVO = 4.7L Magnum EHC = 3.9L SMPI V6 EML = 5.9L V8 MPI Engine EPE = 2.5L POWER TECH I-4 Cyl. EVA = 4.7L V8 MPI	DDC = TRANSMISSION - 5-SPEED HD MANUAL DG4 = TRANSMISSION-MULTI-SPEED AUTO, 45RFE DGK = TRANSMISSION - 4-SPD. AUTOMATIC,42RE DGT = TRANSMISSION - 4-SPD. AUTOMATIC,46RE DGO = AUTO. TRANS.

Case and Related Parts Shift on the Fly [DHK]
Figure 231-210

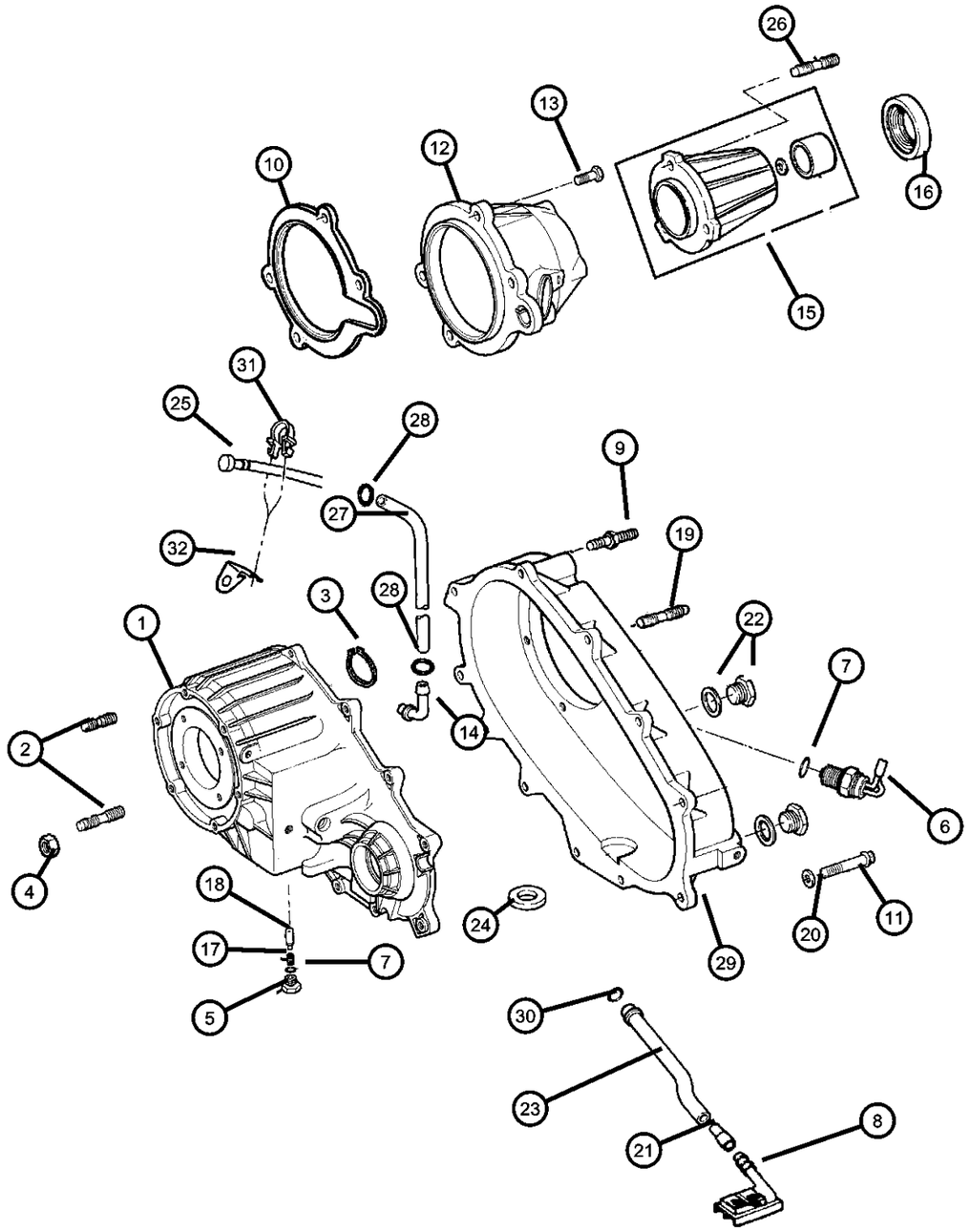

ITEM	PART NUMBER	QTY	LINE	SERIES	BODY	ENGINE	TRANS	TRIM	DESCRIPTION
	04338941	1	5			EH0, EM0, EV0	DBB		
		1	5			EH0, EM0, EV0	DG0		
24									MAGNET, Transmission
	03681601	1	5			EH0, EM0, EV0	DBB		
		1	5			EH0, EM0, EV0	DG0		
25	53007494	1	5						VENT, Transfer Case
26									STUD
	06501289	2	5			EH0, EM0, EV0	DBB		
		2	5			EH0, EM0, EV0	DG0		
27	HFV00516	1	5						HOSE, Fuel And Vapor, 25 Foot Roll 5/16"
28	06502081	1	5						CLAMP, Oil Cooler Line
29									CASE, Transfer Rear
	04886222AA	1	5			EH0, EM0, EV0	DBB		
		1	5			EH0, EM0, EV0	DG0		
30									SEAL, Oil
	04338942	1	5			EH0, EM0, EV0	DBB		
		1	5			EH0, EM0, EV0	DG0		
31									CLIP
	53008550	1	5			EH0, EM0, EV0	DBB		
		1	5			EH0, EM0, EV0	DG0		
32	56019959	1	5						CLIP, Wiring

DAKOTA (AN)

SERIES	LINE	BODY	ENGINE	TRANSMISSION
L = Quad Cab L = Regular Cab L = Club Cab	1 = Dakota 2WD 5 = Dakota 4WD	31 = CLUB CAB 2-DR 6.5 FT BOX 61 = REG CAB 6.5 FT BOX 84 = CREW CAB 4-DR W.B.1	EPO = 2.5L 4 Cyl. EHO = 3.9L 6 Cyl. EMO = 5.9L 8 Cyl. EVO = 4.7L Magnum EHC = 3.9L SMPI V6 EML = 5.9L V8 MPI Engine EPE = 2.5L POWER TECH I-4 Cyl. EVA = 4.7L V8 MPI	DDC = TRANSMISSION - 5-SPEED HD MANUAL DG4 = TRANSMISSION-MULTI-SPEED AUTO, 45RFE DGK = TRANSMISSION - 4-SPD. AUTOMATIC,42RE DGT = TRANSMISSION - 4-SPD. AUTOMATIC,46RE DGO = AUTO. TRANS.

AR = use ase required - = Non illustrrated part

Gear Train Shift on the Fly [DHK]
Figure 231-410

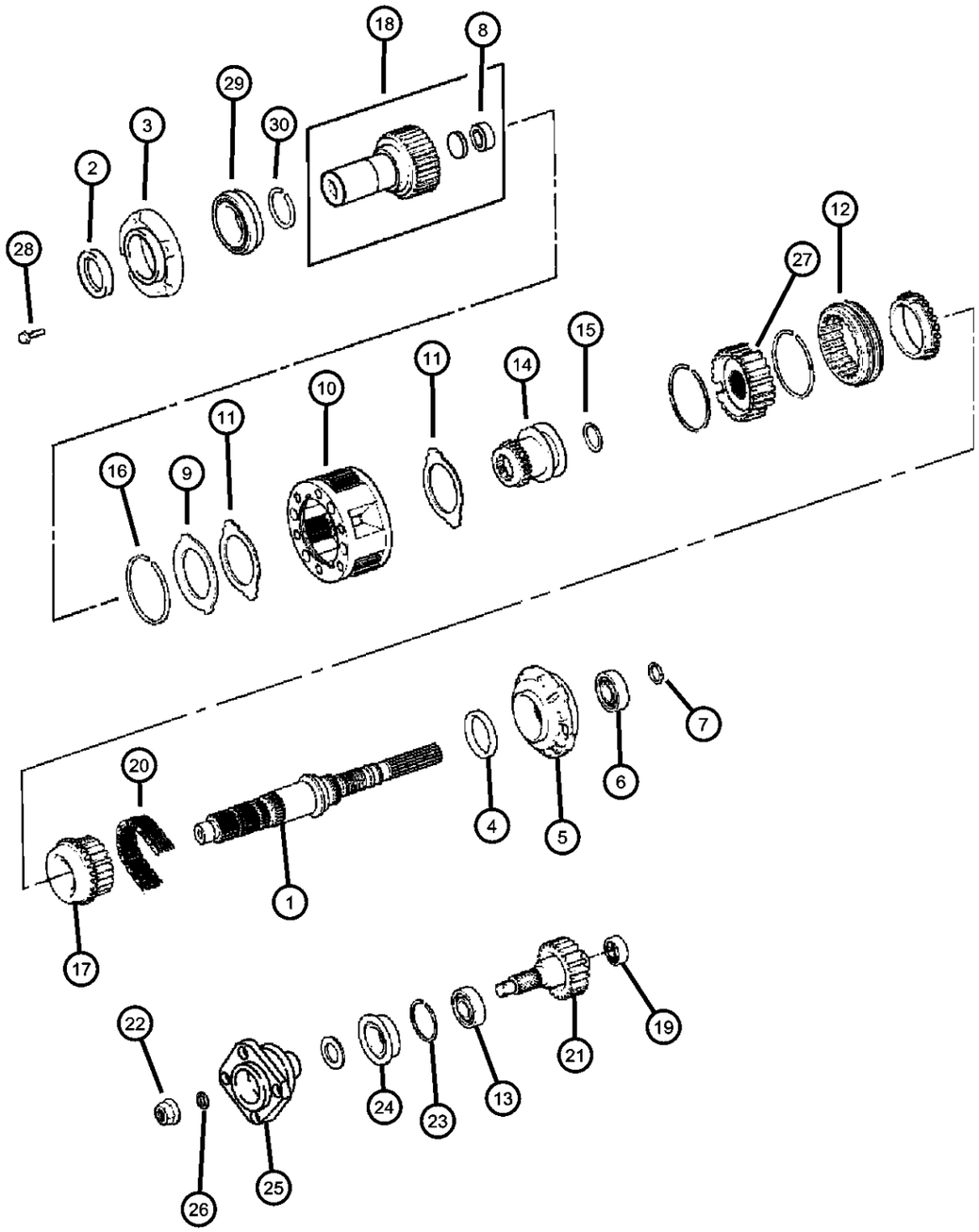

ITEM	PART NUMBER	QTY	LINE	SERIES	BODY	ENGINE	TRANS	TRIM	DESCRIPTION
EHC = 3.9L MAGNUM V6 Engine EVO = 4.7L V8 Engine EML = 5.9L SMPI MAGNUM V8 Engine DDC= NV 3500 HD Manual Transmission 5 Speed DDQ = Aisin Manual Transmission 5 Speed DGK = 42RE Automatic Transmission DGW = 44RE Automatic Trsnsmission									
1									MAINSHAFT, Transfer Case
	05015849AA	1	5			EH0, EM0, EV0	DBB		
		1	5			EH0, EM0, EV0	DG0		
2									SEAL, Input Gear
	04167929	1	5			EH0, EM0, EV0	DBB		
		1	5			EH0, EM0, EV0	DG0		
3									RETAINER
	04338973	1	5			EH0, EM0, EV0	DBB		Front
		1	5			EH0, EM0, EV0	DG0		
4									SEAL, Main Shaft
	04210603	1	5			EH0, EM0, EV0	DBB		
		1	5			EH0, EM0, EV0	DG0		
5									PUMP, Transfer Case Oil
	04338936	1	5			EH0, EM0, EV0	DBB		
		1	5			EH0, EM0, EV0	DG0		
6									BEARING, Output Shaft
	02466224	1	5			EH0, EM0, EV0	DBB		
		1	5			EH0, EM0, EV0	DG0		
7									SNAP RING, 1.28 ID
	06025755	1	5			EH0, EM0, EV0	DBB		
		1	5			EH0, EM0, EV0	DG0		

DAKOTA (AN)

SERIES	LINE	BODY	ENGINE	TRANSMISSION
L = Quad Cab L = Regular Cab L = Club Cab	1 = Dakota 2WD 5 = Dakota 4WD	31 = CLUB CAB 2-DR 6.5 FT BOX 61 = REG CAB 6.5 FT BOX 84 = CREW CAB 4-DR W.B.1	EPO = 2.5L 4 Cyl. EHO = 3.9L 6 Cyl. EMO = 5.9L 8 Cyl. EVO = 4.7L Magnum EHC = 3.9L SMPI V6 EML = 5.9L V8 MPI Engine EPE = 2.5L POWER TECH I-4 Cyl. EVA = 4.7L V8 MPI	DDC = TRANSMISSION - 5-SPEED HD MANUAL DG4 = TRANSMISSION-MULTI-SPEED AUTO, 45RFE DGK = TRANSMISSION - 4-SPD. AUTOMATIC,42RE DGT = TRANSMISSION - 4-SPD. AUTOMATIC,46RE DGO = AUTO. TRANS.

Gear Train Shift on the Fly [DHK]
Figure 231-410

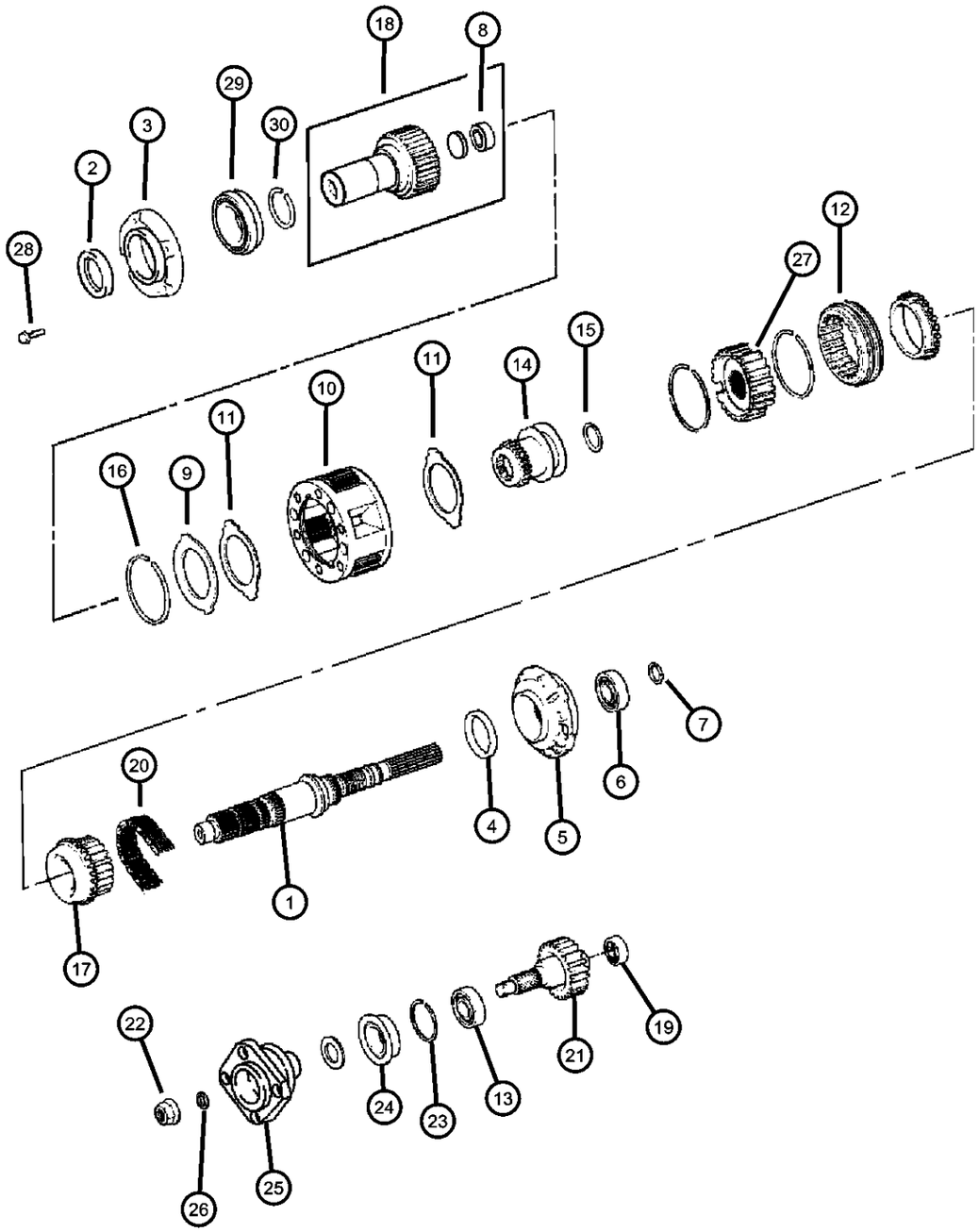

ITEM	PART NUMBER	QTY	LINE	SERIES	BODY	ENGINE	TRANS	TRIM	DESCRIPTION
8									BEARING, Input Shaft
	83503507	1	5			EH0, EM0, EV0	DBB		
		1	5			EH0, EM0, EV0	DG0		
9									RING
	04338909	1	5			EH0, EM0, EV0	DBB		
		1	5			EH0, EM0, EV0	DG0		
10									PLANETARY, Transfer Case
	04796903	1	5			EH0, EM0, EV0	DBB		
		1	5			EH0, EM0, EV0	DG0		
11									THRUST WASHER, Planetary Carrier
	04338908	2	5			EH0, EM0, EV0	DBB		
		2	5			EH0, EM0, EV0	DG0		
12									SLEEVE, Mode Synchronizer
	04796909	1	5			EH0, EM0, EV0	DBB		
		1	5			EH0, EM0, EV0	DG0		
13									BEARING
	04338892	1	5			EH0, EM0, EV0	DBB		
		1	5			EH0, EM0, EV0	DG0		
14									SLEEVE, Range Fork
	04797013	1	5			EH0, EM0, EV0	DBB		
	04897955AA	1	5			EH0, EM0, EV0	DG0		
15									SNAP RING
	04338933	1	5			EH0, EM0, EV0	DBB		
		1	5			EH0, EM0, EV0	DG0		

DAKOTA (AN)

SERIES	LINE	BODY	ENGINE	TRANSMISSION
L = Quad Cab	1 = Dakota 2WD	31 = CLUB CAB 2-DR 6.5 FT BOX	EPO = 2.5L 4 Cyl.	DDC = TRANSMISSION - 5-SPEED HD MANUAL
L = Regular Cab	5 = Dakota 4WD	61 = REG CAB 6.5 FT BOX	EHO = 3.9L 6 Cyl.	DG4 = TRANSMISSION-MULTI-SPEED AUTO, 45RFE
L = Club Cab		84 = CREW CAB 4-DR W.B.1	EMO = 5.9L 8 Cyl.	DGK = TRANSMISSION - 4-SPD. AUTOMATIC,42RE
			EVO = 4.7L Magnum	DGT = TRANSMISSION - 4-SPD. AUTOMATIC,46RE
			EHC = 3.9L SMPI V6	DGO = AUTO. TRANS.
			EML = 5.9L V8 MPI Engine	
			EPE = 2.5L POWER TECH I-4 Cyl.	
			EVA = 4.7L V8 MPI	

Gear Train Shift on the Fly [DHK]
Figure 231-410

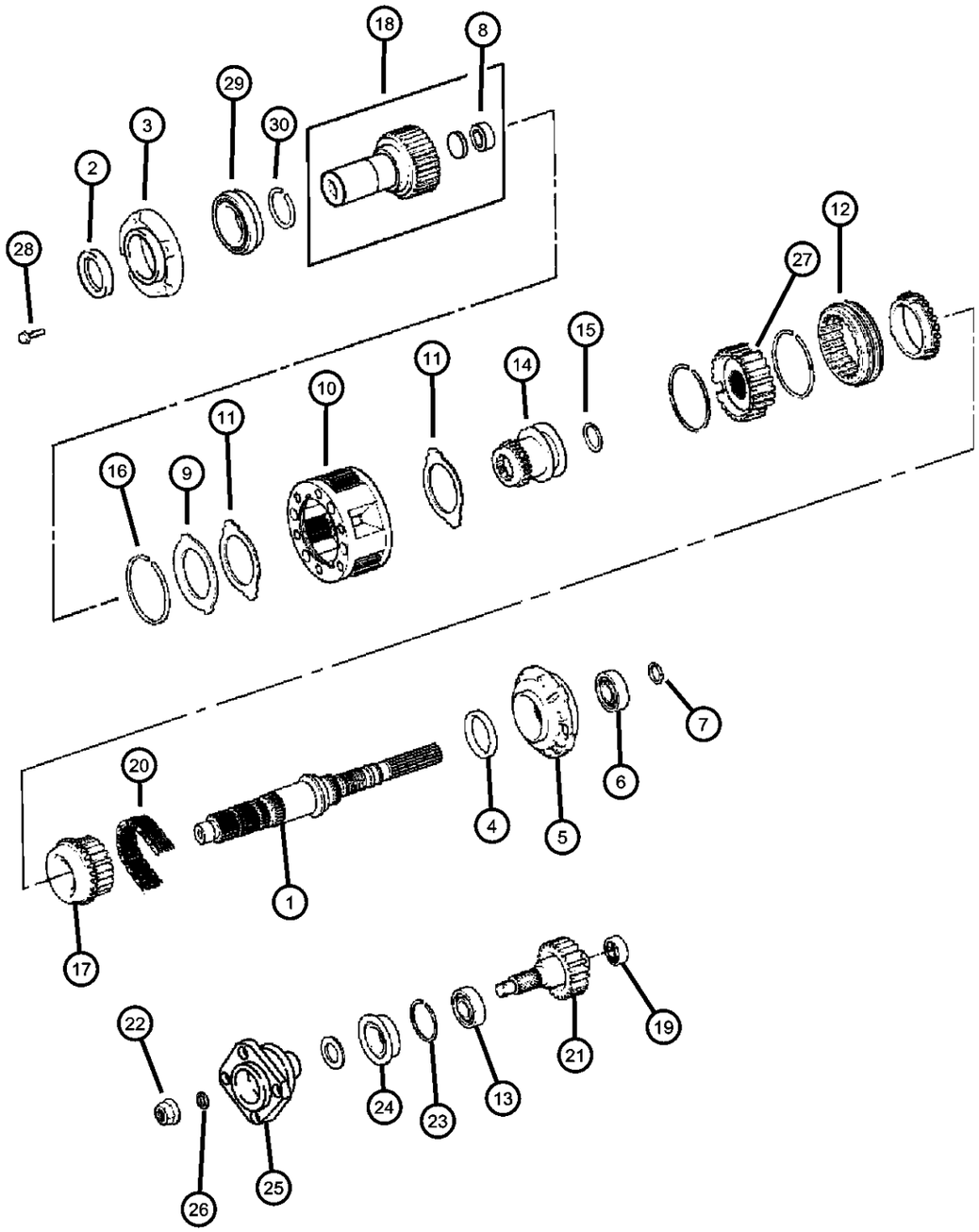

ITEM	PART NUMBER	QTY	LINE	SERIES	BODY	ENGINE	TRANS	TRIM	DESCRIPTION
16									SNAP RING
	04338910	1	5			EH0, EM0, EV0	DBB		
		1	5			EH0, EM0, EV0	DG0		
17									SPROCKET, Transfer Case
	04797017	1	5			EH0, EM0, EV0	DBB		
		1	5			EH0, EM0, EV0	DG0		
18									GEAR, Input
	05015432AA	1	5			EH0, EM0, EV0	DG0		
	05015503AA	1	5			EH0, EM0, EV0	DBB		
19									BEARING, Output Shaft
	04269189	1	5			EH0, EM0, EV0	DBB		
		1	5			EH0, EM0, EV0	DG0		
20									CHAIN, Transfer Case
	04636961	1	5			EH0, EM0, EV0	DBB		
		1	5			EH0, EM0, EV0	DG0		
21									OUTPUT SHAFT, Transfer Case
	04636965	1	5			EH0, EM0, EV0	DBB		
		1	5			EH0, EM0, EV0	DG0		
22									NUT, Hex Flange
	04446488	1	5			EH0, EM0, EV0	DBB		
		1	5			EH0, EM0, EV0	DG0		
23									SNAP RING, Bearing
	04338894	1	5			EH0, EM0, EV0	DBB		
		1	5			EH0, EM0, EV0	DG0		

DAKOTA (AN)

SERIES	LINE	BODY	ENGINE	TRANSMISSION
L = Quad Cab L = Regular Cab L = Club Cab	1 = Dakota 2WD 5 = Dakota 4WD	31 = CLUB CAB 2-DR 6.5 FT BOX 61 = REG CAB 6.5 FT BOX 84 = CREW CAB 4-DR W.B.1	EPO = 2.5L 4 Cyl. EHO = 3.9L 6 Cyl. EMO = 5.9L 8 Cyl. EVO = 4.7L Magnum EHC = 3.9L SMPI V6 EML = 5.9L V8 MPI Engine EPE = 2.5L POWER TECH I-4 Cyl. EVA = 4.7L V8 MPI	DDC = TRANSMISSION - 5-SPEED HD MANUAL DG4 = TRANSMISSION-MULTI-SPEED AUTO, 45RFE DGK = TRANSMISSION - 4-SPD. AUTOMATIC,42RE DGT = TRANSMISSION - 4-SPD. AUTOMATIC,46RE DGO = AUTO. TRANS.

AR = use ase required - = Non illustrrated part

<< RETURN TO GROUP INDEX

Gear Train Shift on the Fly [DHK]
Figure 231-410

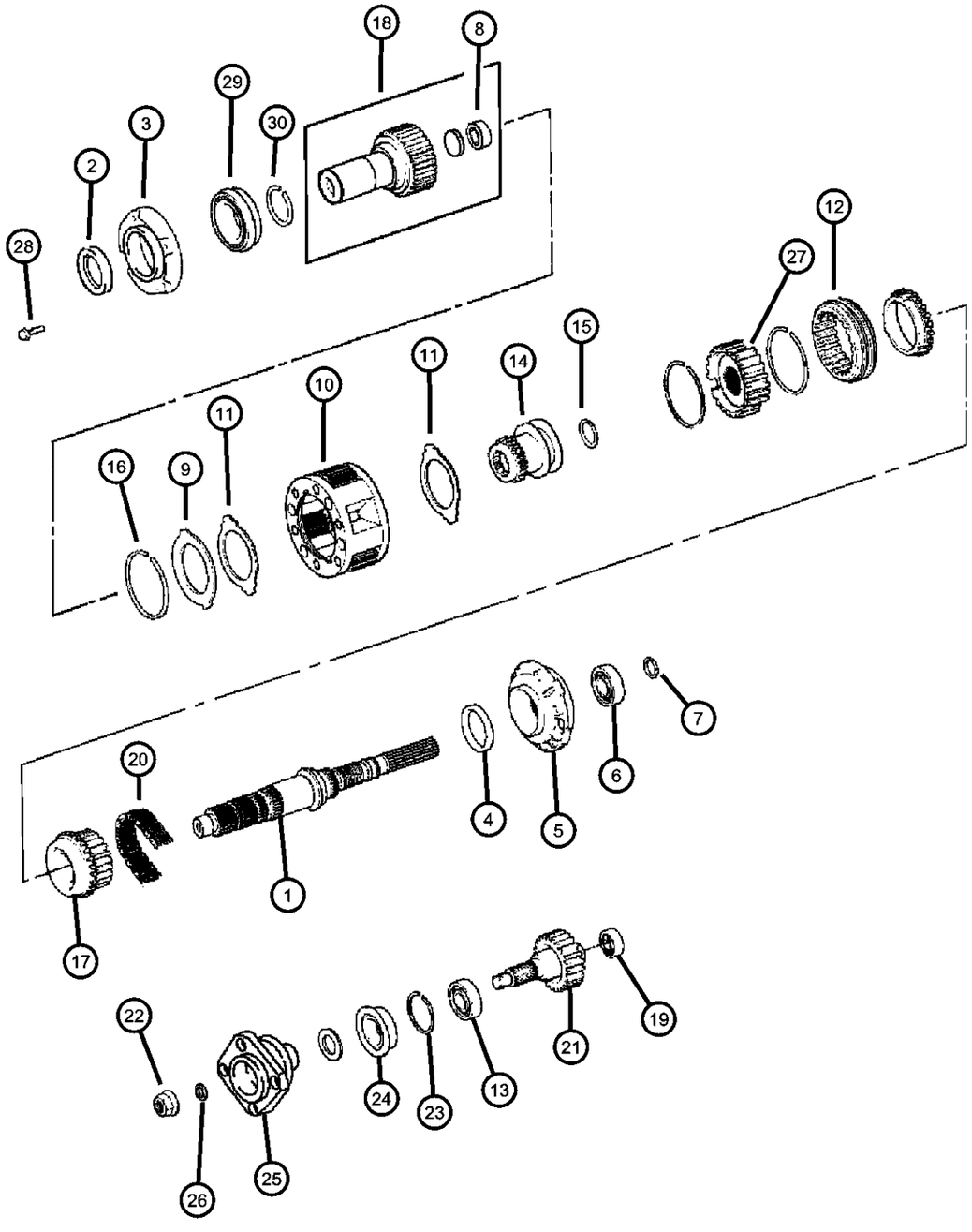

ITEM	PART NUMBER	QTY	LINE	SERIES	BODY	ENGINE	TRANS	TRIM	DESCRIPTION
24	04798112	1	5			EH0, EM0, EV0	DG0		SEAL
25									YOKE, Transfer Case Output
	04798120	1	5			EH0, EM0, EV0	DBB		
		1	5			EH0, EM0, EV0	DG0		
26									WASHER, Flat
	04446487	1	5			EH0, EM0, EV0	DBB		
		1	5			EH0, EM0, EV0	DG0		
27									HUB, Sychronizer Mode
	04741240	1	5			EH0, EM0, EV0	DBB		
		1	5			EH0, EM0, EV0	DG0		
28									BOLT
	06500318	9	5			EH0, EM0, EV0	DBB		
		9	5			EH0, EM0, EV0	DG0		
29									BEARING, Input Shaft
	04338891	1	5			EH0, EM0, EV0	DBB		
		1	5			EH0, EM0, EV0	DG0		
30									SNAP RING
	03821558	1	5			EH0, EM0, EV0	DBB		
		1	5			EH0, EM0, EV0	DG0		

DAKOTA (AN)

SERIES	LINE	BODY	ENGINE	TRANSMISSION
L = Quad Cab L = Regular Cab L = Club Cab	1 = Dakota 2WD 5 = Dakota 4WD	31 = CLUB CAB 2-DR 6.5 FT BOX 61 = REG CAB 6.5 FT BOX 84 = CREW CAB 4-DR W.B.1	EPO = 2.5L 4 Cyl. EHO = 3.9L 6 Cyl. EMO = 5.9L 8 Cyl. EVO = 4.7L Magnum EHC = 3.9L SMPI V6 EML = 5.9L V8 MPI Engine EPE = 2.5L POWER TECH I-4 Cyl. EVA = 4.7L V8 MPI	DDC = TRANSMISSION - 5-SPEED HD MANUAL DG4 = TRANSMISSION-MULTI-SPEED AUTO, 45RFE DGK = TRANSMISSION - 4-SPD. AUTOMATIC,42RE DGT = TRANSMISSION - 4-SPD. AUTOMATIC,46RE DGO = AUTO. TRANS.

AR = use ase required - = Non illustrrated part

<< RETURN TO GROUP INDEX

Fork and Rails Shift on the Fly [DHK] [DHJ]
Figure 231-910

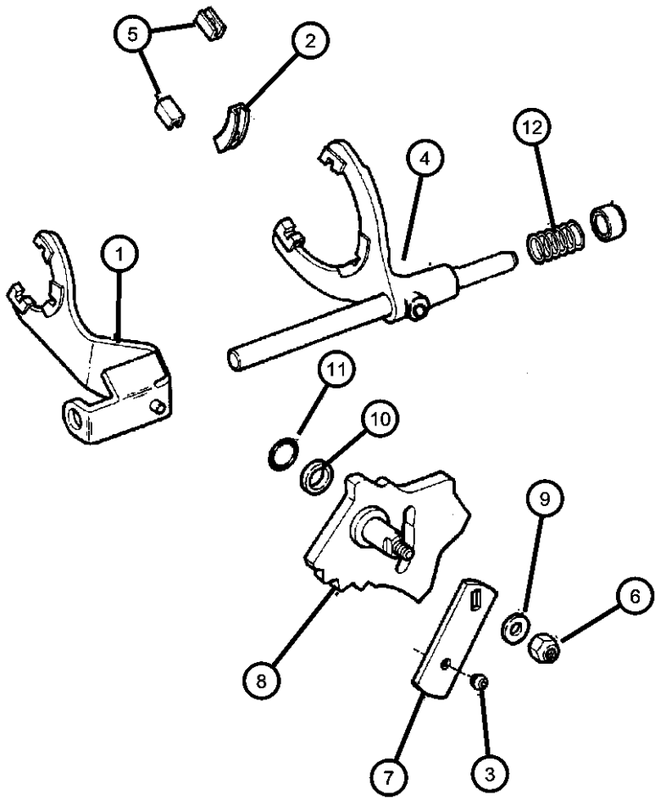

ITEM	PART NUMBER	QTY	LINE	SERIES	BODY	ENGINE	TRANS	TRIM	DESCRIPTION
EHC = 3.9L MAGNUM V6 Engine ELF = 5.2L SMPI MAGNUM 8 Cyl Engine EML = 5.9L SMPI MAGNUM V8 Engine DDC= NV 3500 HD Manual Transmission 5 Speed DDQ = Aisin Manual Transmission 5 Speed DGK = 42RE Automatic Transmission DGW = 44RE Automatic Trsnsmission									
1									FORK, Range
	04798136	1	5			EH0, EM0, EV0	DBB		
		1	5			EH0, EM0, EV0	DG0		
2									PAD, Shift Fork
	04167969	2	5			EH0, EM0, EV0	DBB		
		2	5			EH0, EM0, EV0	DG0		
3									GROMMET, Shift Lever
	05015837AA	1	5			EH0, EM0, EV0	DBB		
		1	5			EH0, EM0, EV0	DG0		
4									FORK, Transfer Case Mode Shift
	04741237	1	5			EH0, EM0, EV0	DBB		
		1	5			EH0, EM0, EV0	DG0		
5									PAD, Shift Fork
	04219073	1	5			EH0, EM0, EV0	DBB		
		1	5			EH0, EM0, EV0	DG0		
6									NUT, Hex Flange Lock
	00152345	1	5			EH0, EM0, EV0	DBB		
		1	5			EH0, EM0, EV0	DG0		
7									LEVER, Transfer Case
	05015836AA	1	5			EH0, EM0, EV0	DBB		
		1	5			EH0, EM0, EV0	DG0		

DAKOTA (AN)

SERIES	LINE	BODY	ENGINE	TRANSMISSION
L = Quad Cab L = Regular Cab L = Club Cab	1 = Dakota 2WD 5 = Dakota 4WD	31 = CLUB CAB 2-DR 6.5 FT BOX 61 = REG CAB 6.5 FT BOX 84 = CREW CAB 4-DR W.B.1	EPO = 2.5L 4 Cyl. EHO = 3.9L 6 Cyl. EMO = 5.9L 8 Cyl. EVO = 4.7L Magnum EHC = 3.9L SMPI V6 EML = 5.9L V8 MPI Engine EPE = 2.5L POWER TECH I-4 Cyl. EVA = 4.7L V8 MPI	DDC = TRANSMISSION - 5-SPEED HD MANUAL DG4 = TRANSMISSION-MULTI-SPEED AUTO, 45RFE DGK = TRANSMISSION - 4-SPD. AUTOMATIC,42RE DGT = TRANSMISSION - 4-SPD. AUTOMATIC,46RE DGO = AUTO. TRANS.

Fork and Rails Shift on the Fly [DHK] [DHJ]
Figure 231-910

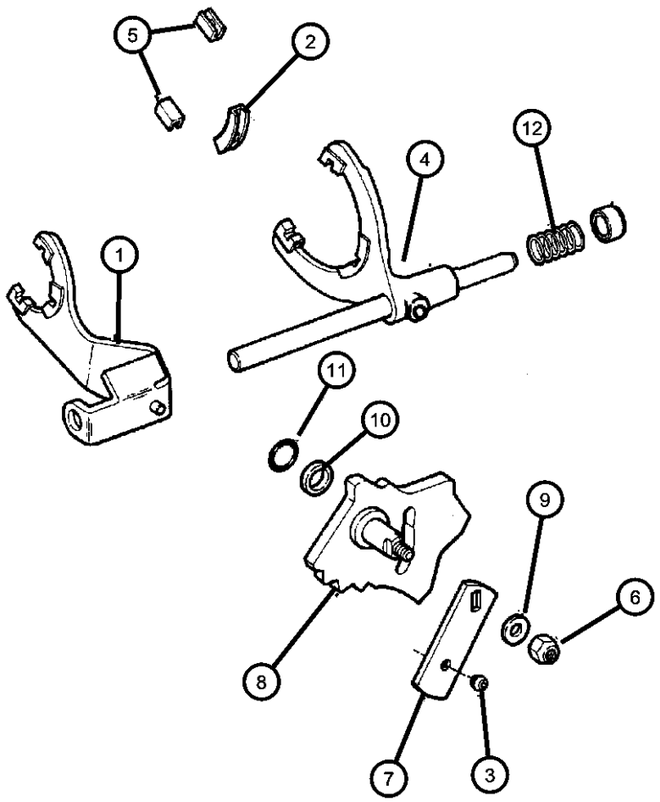

ITEM	PART NUMBER	QTY	LINE	SERIES	BODY	ENGINE	TRANS	TRIM	DESCRIPTION
8									SECTOR, Transfer Case
	05015848AB	1	5			EH0, EM0, EV0	DBB		
		1	5			EH0, EM0, EV0	DG0		
9									WASHER, Flat
	04210983	2	5			EH0, EM0, EV0	DBB		
		2	5			EH0, EM0, EV0	DG0		
10									SEAL, O-Ring
	04167964	1	5			EH0, EM0, EV0	DBB		
		1	5			EH0, EM0, EV0	DG0		
11									SEAL, O-Ring
	04167963	1	5			EH0, EM0, EV0	DBB		
		1	5			EH0, EM0, EV0	DG0		
12									SPRING, Mode Shift Rail
	04338925	1	5			EH0, EM0, EV0	DBB		
		1	5			EH0, EM0, EV0	DG0		

DAKOTA (AN)

SERIES	LINE	BODY	ENGINE	TRANSMISSION
L = Quad Cab L = Regular Cab L = Club Cab	1 = Dakota 2WD 5 = Dakota 4WD	31 = CLUB CAB 2-DR 6.5 FT BOX 61 = REG CAB 6.5 FT BOX 84 = CREW CAB 4-DR W.B.1	EPO = 2.5L 4 Cyl. EHO = 3.9L 6 Cyl. EMO = 5.9L 8 Cyl. EVO = 4.7L Magnum EHC = 3.9L SMPI V6 EML = 5.9L V8 MPI Engine EPE = 2.5L POWER TECH I-4 Cyl. EVA = 4.7L V8 MPI	DDC = TRANSMISSION - 5-SPEED HD MANUAL DG4 = TRANSMISSION-MULTI-SPEED AUTO, 45RFE DGK = TRANSMISSION - 4-SPD. AUTOMATIC,42RE DGT = TRANSMISSION - 4-SPD. AUTOMATIC,46RE DGO = AUTO. TRANS.

Gearshift Controls Shift on the Fly [DHK]
Figure 231-1210

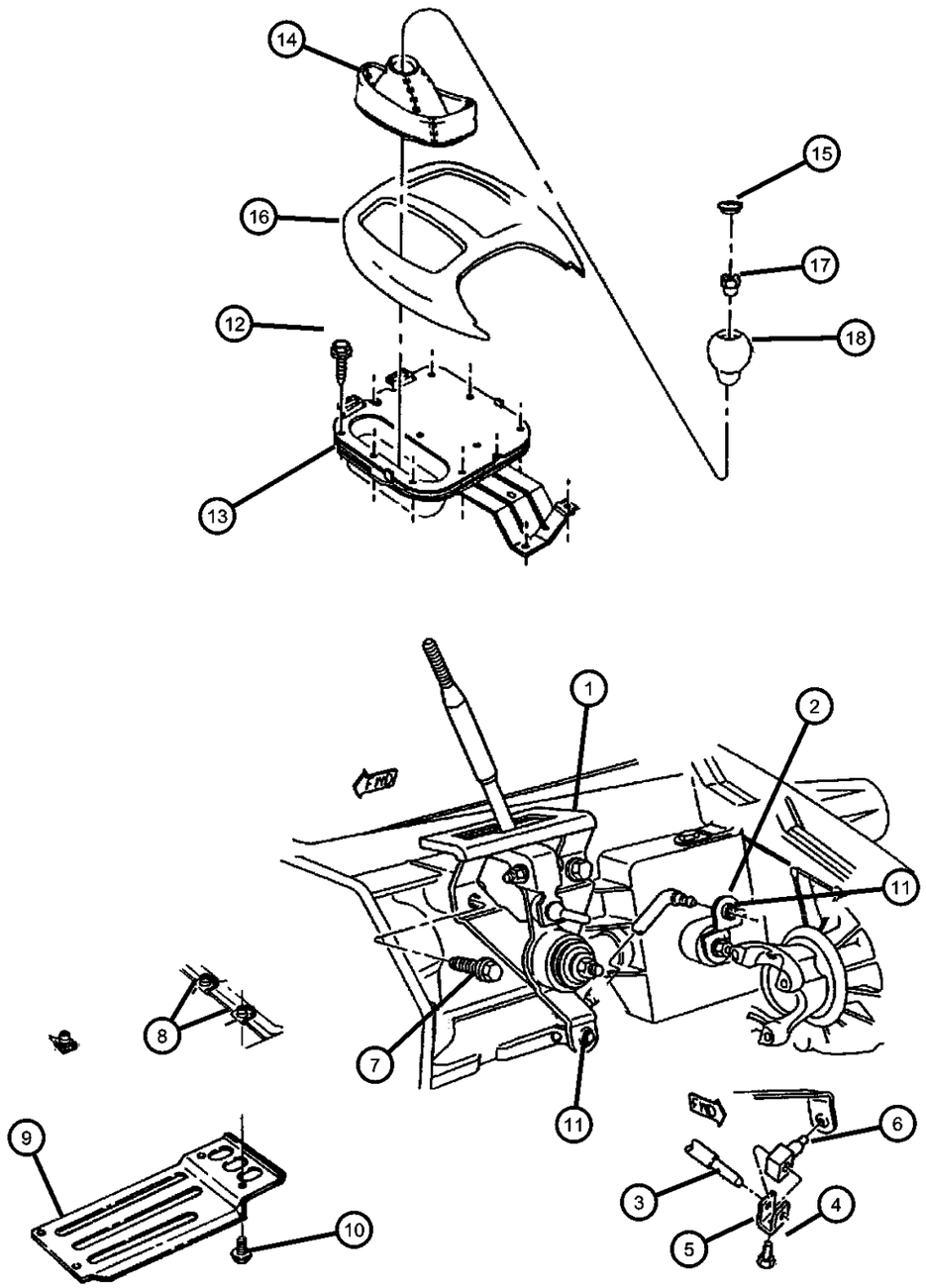

ITEM	PART NUMBER	QTY	LINE	SERIES	BODY	ENGINE	TRANS	TRIM	DESCRIPTION
EHC = 3.9L MAGNUM V6 Engine ELF = 5.2L SMPI MAGNUM 8 Cyl Engine EML = 5.9L SMPI MAGNUM V8 Engine DDC= NV 3500 HD Manual Transmission 5 Speed DDQ = Aisin Manual Transmission 5 Speed DGK = 42RE Automatic Transmission DGW = 44RE Automatic Trsnsmission									
1	52105397AC	1	5						SHIFTER, Transfer Case
2									LEVER, Transfer Case
	05015836AA	1	5			EH0, EM0, EV0	DBB		
		1	5			EH0, EM0, EV0	DG0		
3	52105389AA	1	5						ROD, Gear Shift Control, Transfer Case
4	00181086	1	5						BOLT, Hex Head, .312-18x.75
5	04377309	1	5						CLAMP, Shift Rod
6	03467790	1	5						SWIVEL, Gearshift Control Rod
7									BOLT, Hex Flange Head
	04210614	1	5			EH0, EM0, EV0	DBB		
		1	5			EH0, EM0, EV0	DG0		
8	06101340	4	5						U-NUT, M10-1.50
9	52020479AB	1	5						SKID PLATE, Front
10	52020479AB	1							SCREW, (NOT SERVICED)
11									GROMMET, Shift Lever
	05015837AA	1	5			EH0, EM0, EV0	DBB		
		1	5			EH0, EM0, EV0	DG0		
12		1							SCREW, Hex Flange Head Tapping, M4.8 x 1.59 x 25.00, (NOT SERVICED)
13	52107765AA	1					DBB		BOOT, Gear Shift Lever
14	52078782	1					DBB		BOOT, Gearshift
15	52105398AA	1	5						INSERT, Transfer Case Shift Knob
16									BEZEL, Gear Selector
	5FL84LAZAC	1	1				DG0		Agate

DAKOTA (AN)

SERIES	LINE	BODY	ENGINE	TRANSMISSION
L = Quad Cab L = Regular Cab L = Club Cab	1 = Dakota 2WD 5 = Dakota 4WD	31 = CLUB CAB 2-DR 6.5 FT BOX 61 = REG CAB 6.5 FT BOX 84 = CREW CAB 4-DR W.B.1	EPO = 2.5L 4 Cyl. EHO = 3.9L 6 Cyl. EMO = 5.9L 8 Cyl. EVO = 4.7L Magnum EHC = 3.9L SMPI V6 EML = 5.9L V8 MPI Engine EPE = 2.5L POWER TECH I-4 Cyl. EVA = 4.7L V8 MPI	DDC = TRANSMISSION - 5-SPEED HD MANUAL DG4 = TRANSMISSION-MULTI-SPEED AUTO, 45RFE DGK = TRANSMISSION - 4-SPD. AUTOMATIC,42RE DGT = TRANSMISSION - 4-SPD. AUTOMATIC,46RE DGO = AUTO. TRANS.

Gearshift Controls Shift on the Fly [DHK]
Figure 231-1210

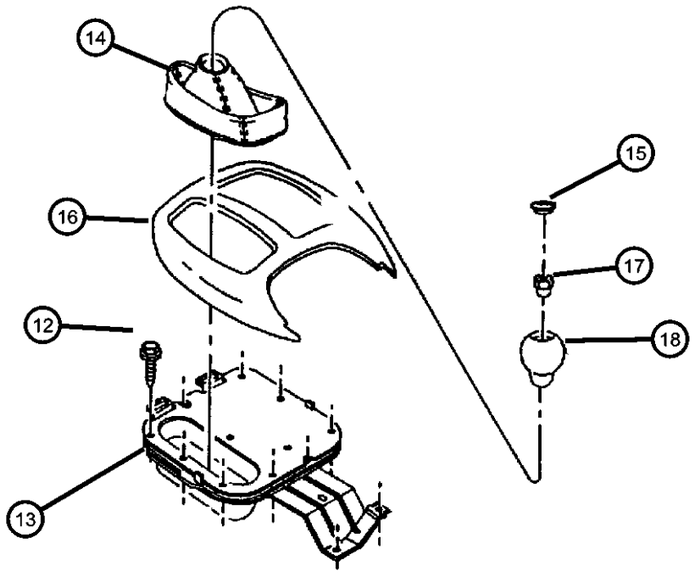

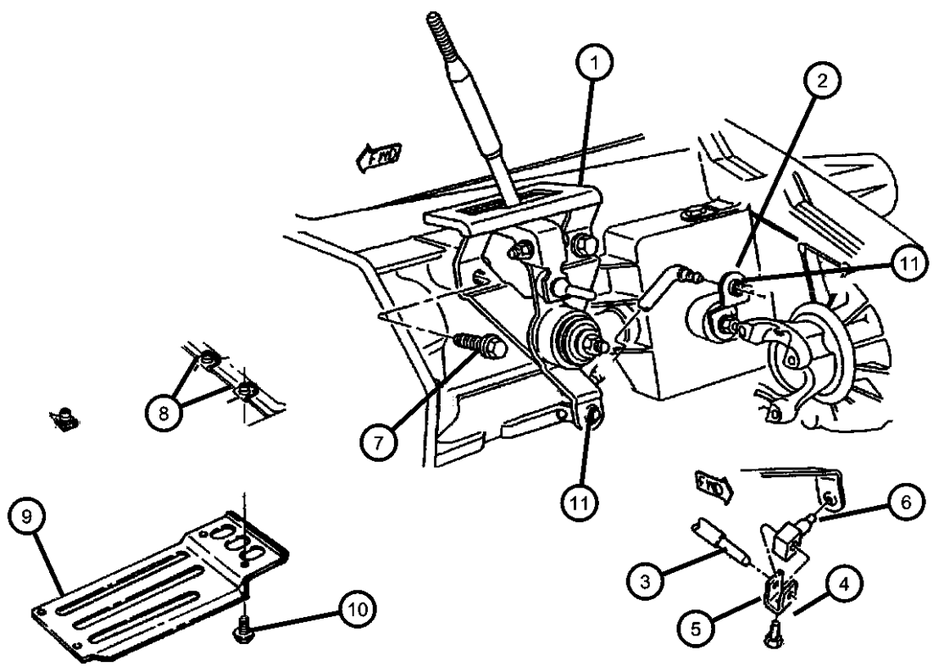

ITEM	PART NUMBER	QTY	LINE	SERIES	BODY	ENGINE	TRANS	TRIM	DESCRIPTION
	5FL84RC3AC	1	1				DG0		Mist Gray
	5FZ82LAZAB	1	1				DBB		Agate
	5FZ82RC3AB	1	1				DBB		Mist Gray
	5GE35LAZAB	1	5				DG0		Agate, (DHC)
	5GE35RC3AB	1	5				DG0		Mist Gray, (DHC
	5GE36RC3AB	1	5				DBB		Mist Gray
	5GE36LAZAC	1	5				DBB		Agate
	5GE94LAZAB	1	5				DG0		Agate, (DHK)
	5GE94RC3AB	1	5				DG0		Mist Gray, (DHK)
17									NUT, Hex, M10-1.5
	06502556	1					DBB		
		1	5						
18	52104174	1					DBB		KNOB, Gearshift

DAKOTA (AN)

SERIES	LINE	BODY	ENGINE	TRANSMISSION
L = Quad Cab L = Regular Cab L = Club Cab	1 = Dakota 2WD 5 = Dakota 4WD	31 = CLUB CAB 2-DR 6.5 FT BOX 61 = REG CAB 6.5 FT BOX 84 = CREW CAB 4-DR W.B.1	EPO = 2.5L 4 Cyl. EHO = 3.9L 6 Cyl. EMO = 5.9L 8 Cyl. EVO = 4.7L Magnum EHC = 3.9L SMPI V6 EML = 5.9L V8 MPI Engine EPE = 2.5L POWER TECH I-4 Cyl. EVA = 4.7L V8 MPI	DDC = TRANSMISSION - 5-SPEED HD MANUAL DG4 = TRANSMISSION-MULTI-SPEED AUTO, 45RFE DGK = TRANSMISSION - 4-SPD. AUTOMATIC,42RE DGT = TRANSMISSION - 4-SPD. AUTOMATIC,46RE DGO = AUTO. TRANS.

Group - 242

Transfer Case Model 242 [DHC, DHP]

242-100 Transfer Case Assembly 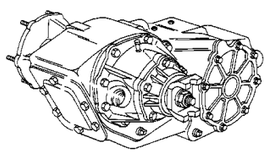	**242-1200** Gearshift Controls 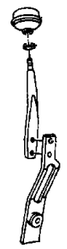	**242-200** Case and Related Parts 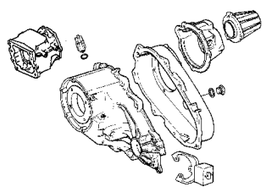	**242-400** Gear Train 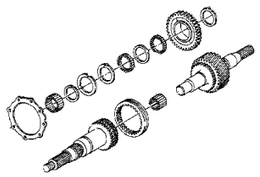
242-900 Fork and Rails 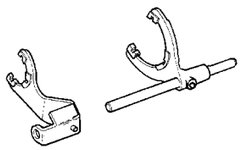			

Group - 242 Transfer Case Model 242 [DHC, DHP]

Illustration Title — Group-Fig. No.

Transfer Case Assembly
Transfer Case Full Time [DHC] ..... Fig. 242 - 110

Case and Related Parts
Case and Related Parts Full Time [DHC] ..... Fig. 242 - 210

Gear Train
Gear Train Full Time [DHC] ..... Fig. 242 - 410

Fork and Rails
Fork and Rail Full Time [DHC] ..... Fig. 242 - 910

Gearshift Controls
Gearshift Controls Full Ttime [DHC] ..... Fig. 242 - 1230

Transfer Case Full Time [DHC]
Figure 242-110

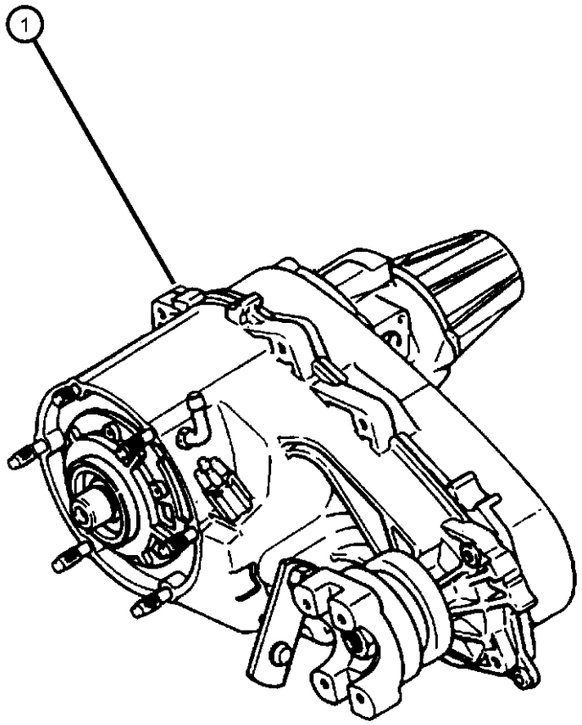

ITEM	PART NUMBER	QTY	LINE	SERIES	BODY	ENGINE	TRANS	TRIM	DESCRIPTION
ELF = 5.2L SMPI MAGNUM 8 Cyl Engine EML = 5.9L SMPI MAGNUM 8 Cyl Engine									
1	52105332AG	1	5			EM0, EV0			TRANSFER CASE, NP242

DAKOTA (AN)

SERIES	LINE	BODY	ENGINE	TRANSMISSION
L = Quad Cab L = Regular Cab L = Club Cab	1 = Dakota 2WD 5 = Dakota 4WD	31 = CLUB CAB 2-DR 6.5 FT BOX 61 = REG CAB 6.5 FT BOX 84 = CREW CAB 4-DR W.B.1	EPO = 2.5L 4 Cyl. EHO = 3.9L 6 Cyl. EMO = 5.9L 8 Cyl. EVO = 4.7L Magnum EHC = 3.9L SMPI V6 EML = 5.9L V8 MPI Engine EPE = 2.5L POWER TECH I-4 Cyl. EVA = 4.7L V8 MPI	DDC = TRANSMISSION - 5-SPEED HD MANUAL DG4 = TRANSMISSION-MULTI-SPEED AUTO, 45RFE DGK = TRANSMISSION - 4-SPD. AUTOMATIC,42RE DGT = TRANSMISSION - 4-SPD. AUTOMATIC,46RE DGO = AUTO. TRANS.

Case and Related Parts Full Time [DHC]
Figure 242-210

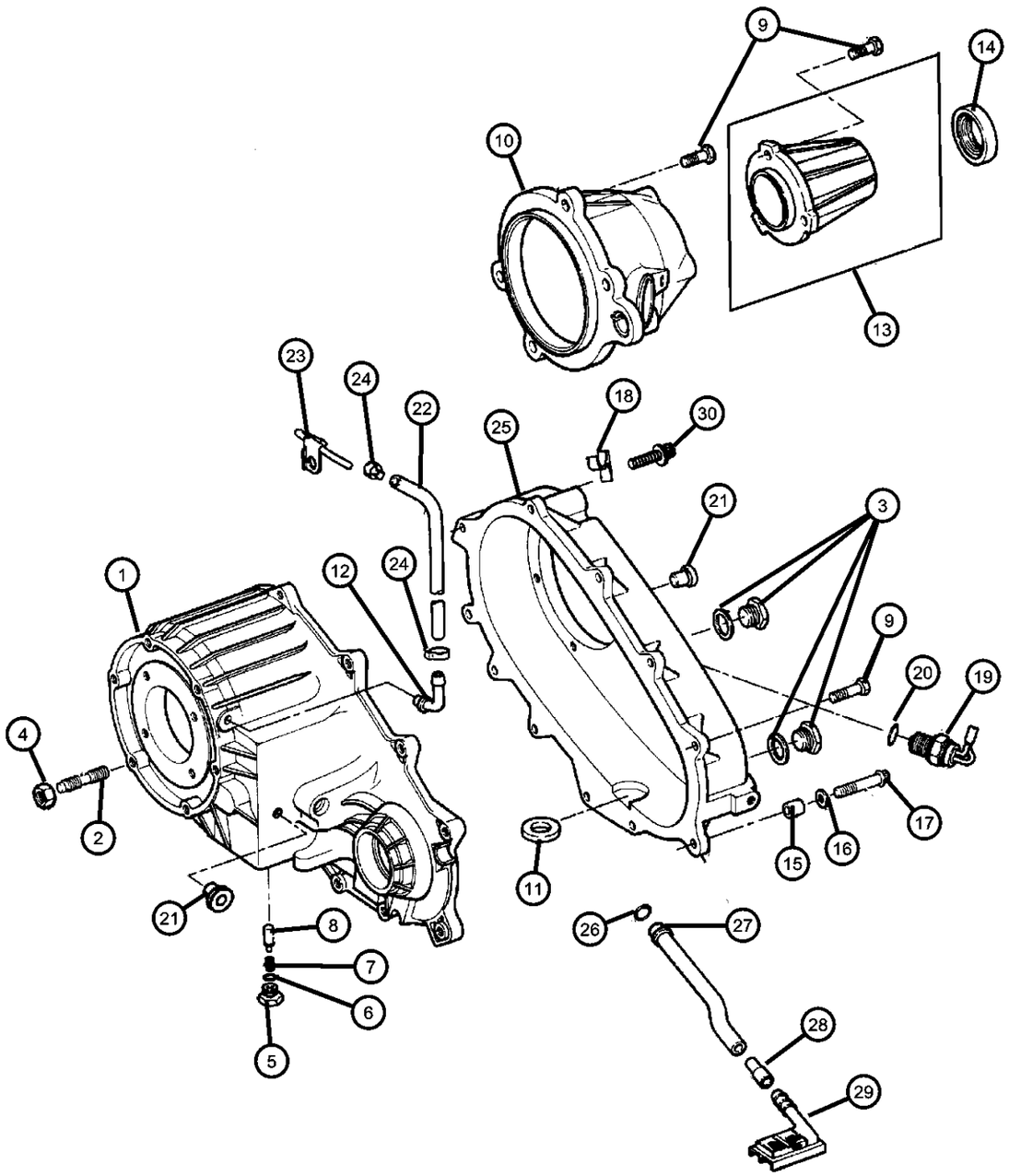

ITEM	PART NUMBER	QTY	LINE	SERIES	BODY	ENGINE	TRANS	TRIM	DESCRIPTION
ELF = 5.2L SMPI MAGNUM 8 Cyl Engine EML = 5.9L SMPI MAGNUM 8 Cyl Engine									
1	05015828AA	1	5			EM0, EV0			CASE, Transfer Front
2	04505365	6	5			EM0, EV0			STUD, M10x1.54x36
3	04856641	2	5			EM0, EV0			PLUG, Oil Fill
4	04856641	2							NUT AND CONED WASHER, Hex, .375-24, (NOT SERVICED)
5	04886473AA	1	5			EM0, EV0			SCREW
6	04338956	1	5			EM0, EV0			SEAL, Vacuum Switch
7	05003445AA	1	5			EM0, EV0			SPRING, Poppet Plunger
8	05003444AA	1	5			EM0, EV0			PLUNGER
9	04210617	11	5			EM0, EV0			BOLT, Transfer Case
10	05003456AA	1	5			EM0, EV0			RETAINER, Transfer Case Rear
11	03681601	1	5			EM0, EV0			MAGNET, Transmission
12	04796910	1	5			EM0, EV0			VENT, Transfer Case
13	04338973	1	5			EM0, EV0			EXTENSION, Transfer Case
14	04798125	1	5			EM0, EV0			SEAL, Output Shaft
15	04116310	2	5			EM0, EV0			DOWEL, Transfer Case
16	04210983	2	5			EM0, EV0			WASHER, Flat
17	04210614	4	5			EM0, EV0			BOLT, Hex Flange Head
18	53008550	1	5			EM0, EV0			CLIP
19	J8134473	1	5			EM0, EV0			SWITCH, Transfer Case Mode
20	04338956	1	5			EM0, EV0			SEAL, Vacuum Switch
21	00015105	1	5			EM0, EV0			PLUG, Transmission Case
22	04443176	1	5						HOSE, Fuel, .31 I.D. 50 Foot Roll
23	04796910	1	5			EM0, EV0			VENT, Transfer Case
24	06502081	1	5						CLAMP, Oil Cooler Line
25	05013858AA	1	5			EM0, EV0			CASE, Transfer Case Rear
26	04338942	1	5			EM0, EV0			SEAL, Oil
27	05003455AA	1	5			EM0, EV0			TUBE, Oil Pickup
28	04338944	1	5			EM0, EV0			CONNECTOR, Oil Tube Pickup
29	04338943	1	5			EM0, EV0			FILTER, Transfer Case Oil

DAKOTA (AN)

SERIES	LINE	BODY	ENGINE	TRANSMISSION
L = Quad Cab L = Regular Cab L = Club Cab	1 = Dakota 2WD 5 = Dakota 4WD	31 = CLUB CAB 2-DR 6.5 FT BOX 61 = REG CAB 6.5 FT BOX 84 = CREW CAB 4-DR W.B.1	EPO = 2.5L 4 Cyl. EHO = 3.9L 6 Cyl. EMO = 5.9L 8 Cyl. EVO = 4.7L Magnum EHC = 3.9L SMPI V6 EML = 5.9L V8 MPI Engine EPE = 2.5L POWER TECH I-4 Cyl. EVA = 4.7L V8 MPI	DDC = TRANSMISSION - 5-SPEED HD MANUAL DG4 = TRANSMISSION-MULTI-SPEED AUTO, 45RFE DGK = TRANSMISSION - 4-SPD. AUTOMATIC,42RE DGT = TRANSMISSION - 4-SPD. AUTOMATIC,46RE DGO = AUTO. TRANS.

Case and Related Parts Full Time [DHC]
Figure 242-210

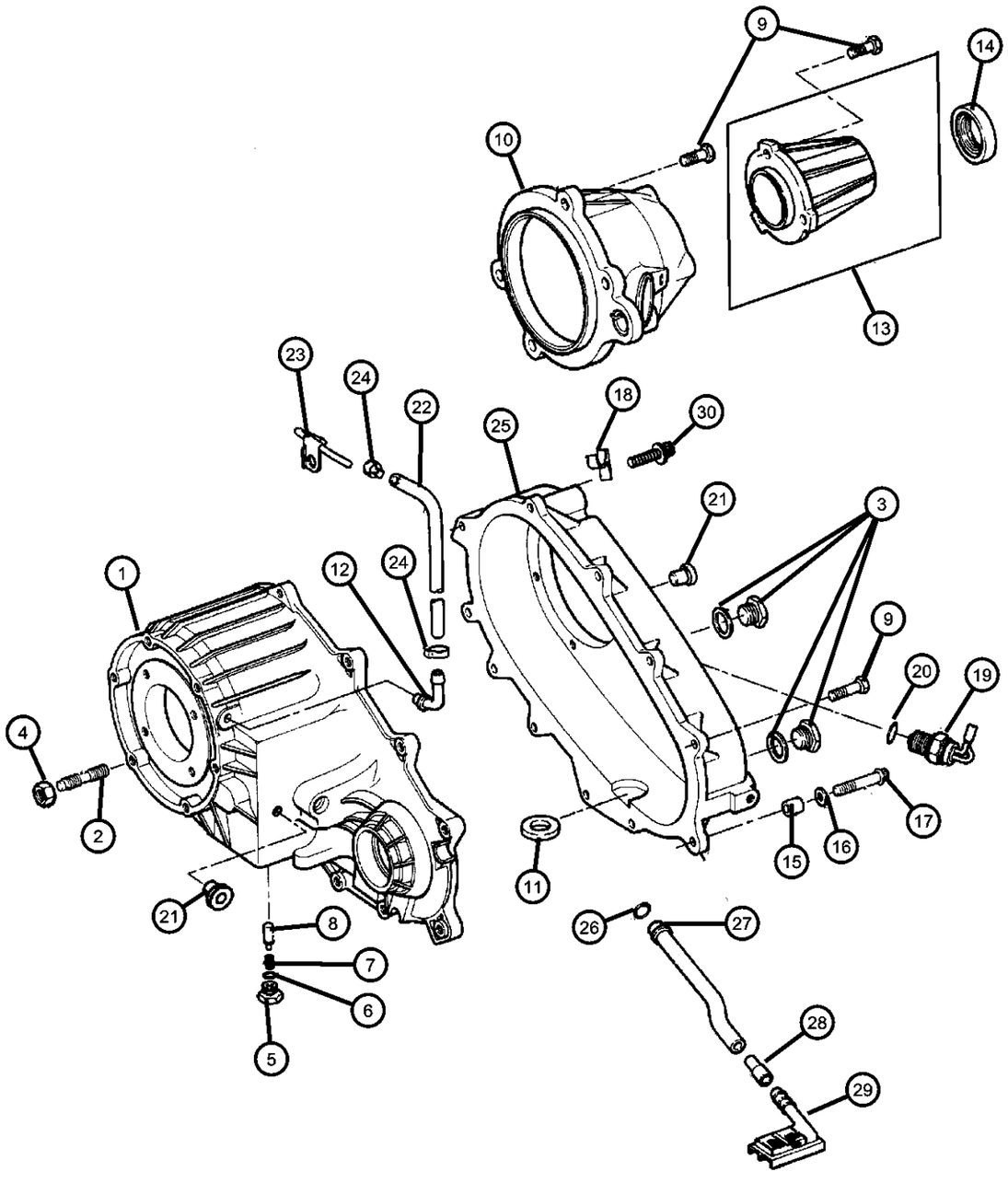

ITEM	PART NUMBER	QTY	LINE	SERIES	BODY	ENGINE	TRANS	TRIM	DESCRIPTION
30	04338943	1							BOLT, Twelve Point Head, M10x1.5x48, (NOT SERVICED)
-31	04638953	1	5			EM0, EV0			DOWEL
-32	04210614	6	5			EM0, EV0			BOLT, Hex Flange Head
-33	06025755	1	5			EM0, EV0			SNAP RING, 1.28 ID

DAKOTA (AN)

SERIES	LINE	BODY	ENGINE	TRANSMISSION
L = Quad Cab L = Regular Cab L = Club Cab	1 = Dakota 2WD 5 = Dakota 4WD	31 = CLUB CAB 2-DR 6.5 FT BOX 61 = REG CAB 6.5 FT BOX 84 = CREW CAB 4-DR W.B.1	EPO = 2.5L 4 Cyl. EHO = 3.9L 6 Cyl. EMO = 5.9L 8 Cyl. EVO = 4.7L Magnum EHC = 3.9L SMPI V6 EML = 5.9L V8 MPI Engine EPE = 2.5L POWER TECH I-4 Cyl. EVA = 4.7L V8 MPI	DDC = TRANSMISSION - 5-SPEED HD MANUAL DG4 = TRANSMISSION-MULTI-SPEED AUTO, 45RFE DGK = TRANSMISSION - 4-SPD. AUTOMATIC,42RE DGT = TRANSMISSION - 4-SPD. AUTOMATIC,46RE DGO = AUTO. TRANS.

Gear Train Full Time [DHC]
Figure 242-410

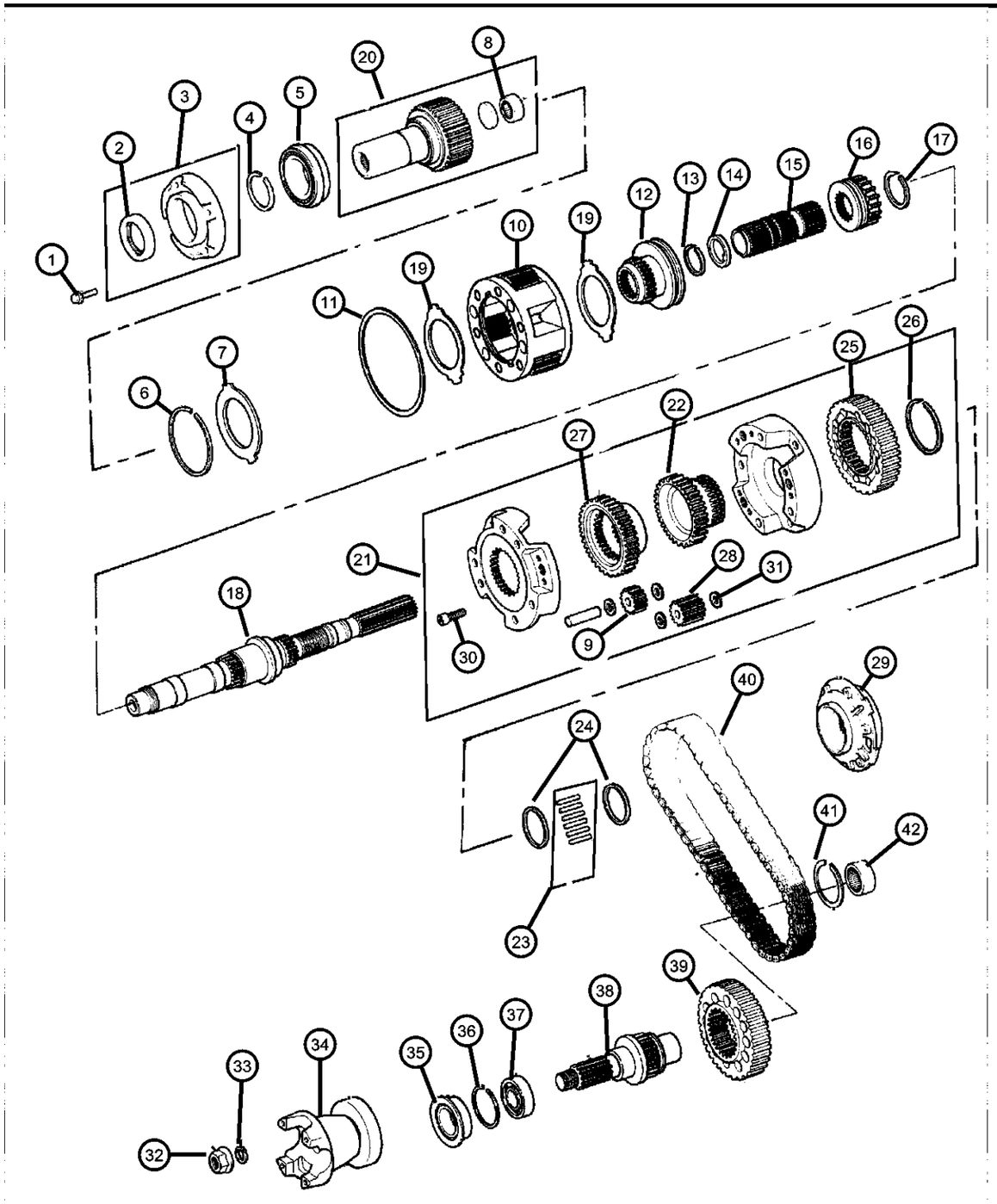

ITEM	PART NUMBER	QTY	LINE	SERIES	BODY	ENGINE	TRANS	TRIM	DESCRIPTION
ELF = 5.2L SMPI MAGNUM 8 Cyl Engine EML = 5.9L SMPI MAGNUM 8 Cyl Engine									
1	06500318	4	5			EM0, EV0			BOLT
2	04167929	1	5			EM0, EV0			SEAL, Input Gear
3	04338973	1	5			EM0, EV0			EXTENSION, Transfer Case
4	03821558	1	5			EM0, EV0			SNAP RING
5	04338891	1	5			EM0, EV0			BEARING, Input Shaft
6	04338910	1	5			EM0, EV0			SNAP RING
7	04338909	1	5			EM0, EV0			RING
8	83503507	1	5			EM0, EV0			BEARING, Input Shaft
9	83504170	3	5			EM0, EV0			GEAR, Planetary
10	04796903	1	5			EM0, EV0			GEAR, Low Range Planetary
11	04219065	1	5			EM0, EV0			SNAP RING, Annulus Gear
12	05003746AA	1	5			EM0, EV0			SLEEVE, Shift Range
13	83503540	1	5			EM0, EV0			SNAP RING
14	83503539	1	5			EM0, EV0			WASHER, Intermediate Sleeve
15	04798277	1	5			EM0, EV0			SHAFT, Intermediate
16	05015835AA	1	5			EM0, EV0			SLEEVE, Mode Synchronizer
17	83503532	1	5			EM0, EV0			SNAP RING
18	05003448AA	1	5			EM0, EV0			MAINSHAFT, Transfer Case
19	04338908	2	5			EM0, EV0			THRUST WASHER, Planetary Carrier
20	05015491AA	1	5			EM0, EV0			GEAR, Input
21	05015833AA	1	5			EM0, EV0			DIFFERENTIAL, Transfer Case
22	05003452AA	1	5			EM0, EV0			SPROCKET, Transfer Case
23	83503543	1	5			EM0, EV0			BEARING PACKAGE, Transfer Case
24	05003779AA	2	5			EM0, EV0			SPACER, Sprocket
25	05003451AA	1	5			EM0, EV0			SPROCKET, Transfer Case
26	83503532	1	5			EM0, EV0			SNAP RING
27	05015834AA	1	5			EM0, EV0			SPROCKET, Differential
28	83504169	3	5			EM0, EV0			GEAR, Planetary
29	04638896	1	5			EM0, EV0			PUMP, Transfer Case Gear Rotor

DAKOTA (AN)

SERIES	LINE	BODY	ENGINE	TRANSMISSION
L = Quad Cab L = Regular Cab L = Club Cab	1 = Dakota 2WD 5 = Dakota 4WD	31 = CLUB CAB 2-DR 6.5 FT BOX 61 = REG CAB 6.5 FT BOX 84 = CREW CAB 4-DR W.B.1	EPO = 2.5L 4 Cyl. EHO = 3.9L 6 Cyl. EMO = 5.9L 8 Cyl. EVO = 4.7L Magnum EHC = 3.9L SMPI V6 EML = 5.9L V8 MPI Engine EPE = 2.5L POWER TECH I-4 Cyl. EVA = 4.7L V8 MPI	DDC = TRANSMISSION - 5-SPEED HD MANUAL DG4 = TRANSMISSION-MULTI-SPEED AUTO, 45RFE DGK = TRANSMISSION - 4-SPD. AUTOMATIC,42RE DGT = TRANSMISSION - 4-SPD. AUTOMATIC,46RE DGO = AUTO. TRANS.

Gear Train Full Time [DHC]
Figure 242-410

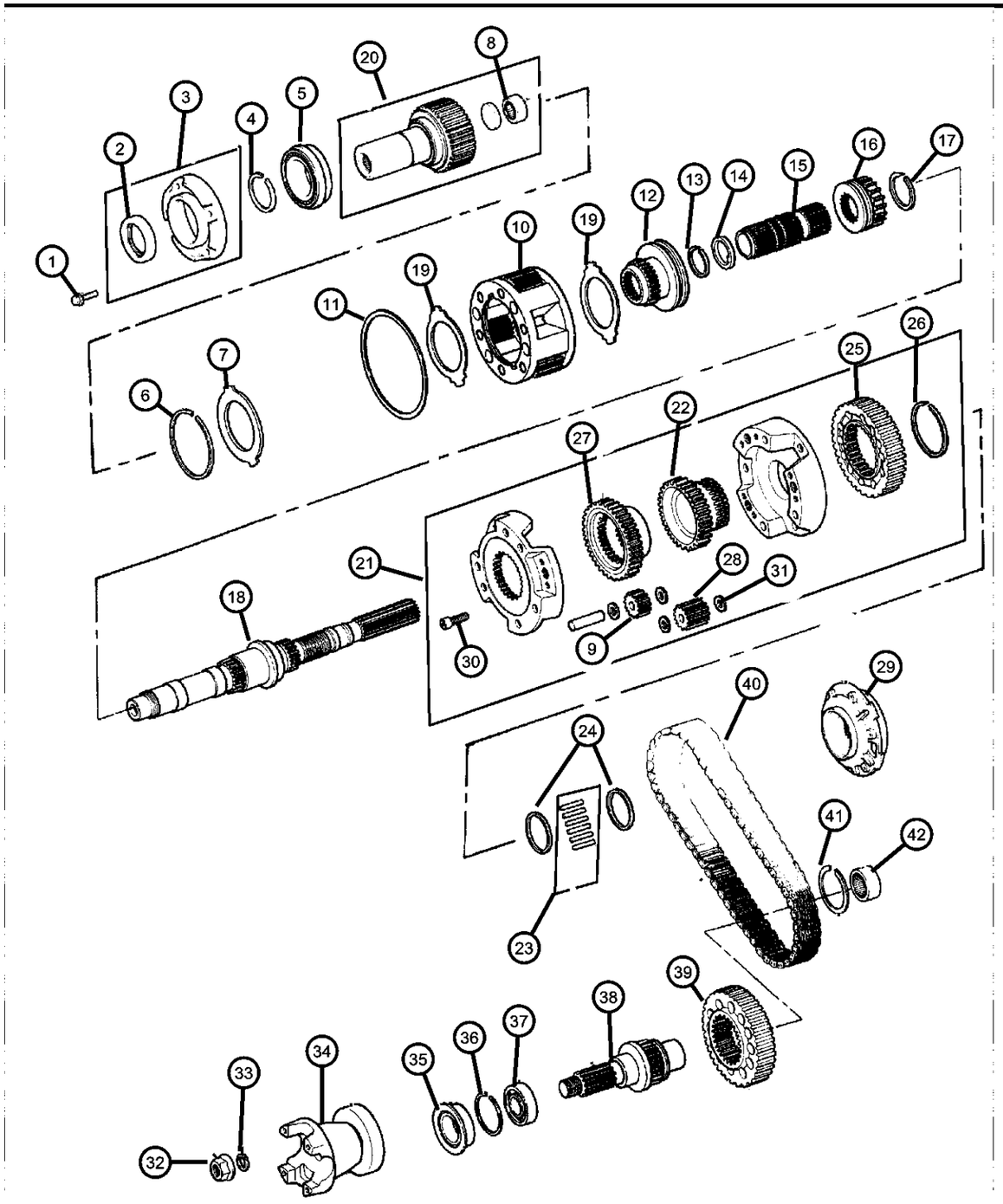

ITEM	PART NUMBER	QTY	LINE	SERIES	BODY	ENGINE	TRANS	TRIM	DESCRIPTION
30	04886473AA	1	5			EM0, EV0			SCREW
31	83504168	12	5			EM0, EV0			WASHER, Differential Gear
32	04167924	1	5			EM0, EV0			NUT, Transfer Case Yoke
33	04210973	1	5			EM0, EV0			WASHER, Transfer Case Yoke
34	04798138	1	5			EM0, EV0			YOKE, Transfer Case
35	04798125	1	5			EM0, EV0			SEAL, Output Shaft
36	0089331A	1	5			EM0, EV0			SNAP RING
37	02466224	2	5			EM0, EV0			BEARING, Output Shaft
38	83503517	1	5			EM0, EV0			OUTPUT SHAFT, Transfer Case
39	05003452AA	1	5			EM0, EV0			SPROCKET, Transfer Case
40	05003453AA	1	5			EM0, EV0			CHAIN, Transfer Case
41	04167991	1	5			EM0, EV0			SNAP RING, Bearing
42	04269189	1	5			EM0, EV0			BEARING, Output Shaft

DAKOTA (AN)

SERIES	LINE	BODY	ENGINE	TRANSMISSION
L = Quad Cab L = Regular Cab L = Club Cab	1 = Dakota 2WD 5 = Dakota 4WD	31 = CLUB CAB 2-DR 6.5 FT BOX 61 = REG CAB 6.5 FT BOX 84 = CREW CAB 4-DR W.B.1	EPO = 2.5L 4 Cyl. EHO = 3.9L 6 Cyl. EMO = 5.9L 8 Cyl. EVO = 4.7L Magnum EHC = 3.9L SMPI V6 EML = 5.9L V8 MPI Engine EPE = 2.5L POWER TECH I-4 Cyl. EVA = 4.7L V8 MPI	DDC = TRANSMISSION - 5-SPEED HD MANUAL DG4 = TRANSMISSION-MULTI-SPEED AUTO, 45RFE DGK = TRANSMISSION - 4-SPD. AUTOMATIC,42RE DGT = TRANSMISSION - 4-SPD. AUTOMATIC,46RE DGO = AUTO. TRANS.

Fork and Rail Full Time [DHC]
Figure 242-910

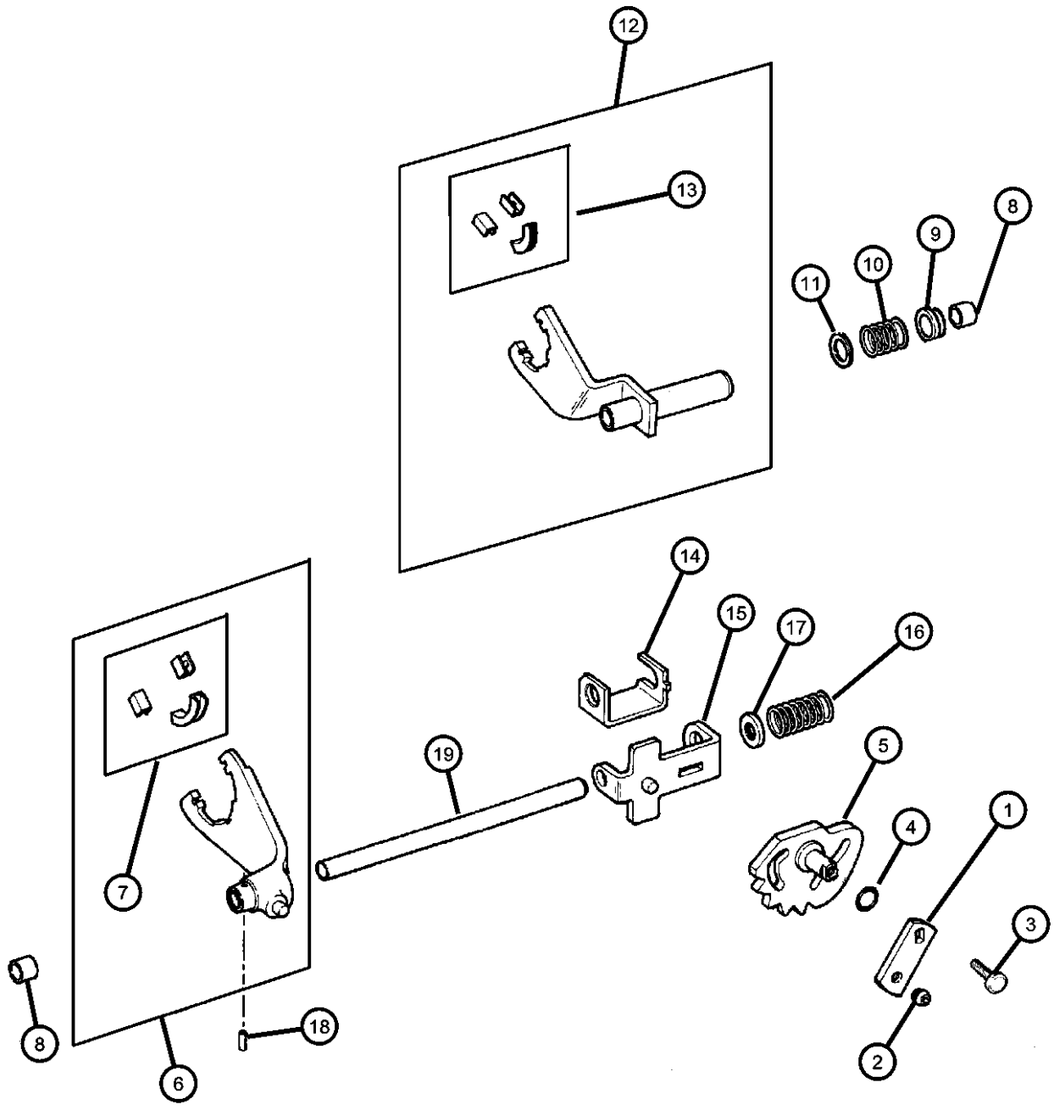

ITEM	PART NUMBER	QTY	LINE	SERIES	BODY	ENGINE	TRANS	TRIM	DESCRIPTION
ELF = 5.2L SMPI MAGNUM 8 Cyl Engine EML = 5.9L SMPI MAGNUM 8 Cyl Engine									
1	05015836AA	1	5			EM0, EV0			LEVER, Transfer Case
2	04338945	1	5			EM0, EV0			BUSHING, Shift Rail
3	05014048AA	1	5			EM0, EV0			BOLT, Hex Head
4	05014046AA	1	5			EM0, EV0			SEAL, Sector Shaft
5	05015829AB	1	5			EM0, EV0			SECTOR, Transfer Case
6	05015831AA	1	5			EM0, EV0			FORK, Range
7	04167969	2	5			EM0, EV0			PAD, Shift Fork
8	J8134291	2	5			EM0, EV0			BUSHING, Shift Fork
9	04338945	1	5			EM0, EV0			BUSHING, Shift Rail
10	83503513	1	5			EM0, EV0			SPRING, Mode Shift Fork
11	04210983	2	5			EM0, EV0			WASHER, Flat
12	04638950	1	5			EM0, EV0			FORK, Transfer Case Mode Shift
13	04338376	1	5			EM0, EV0			PAD, Shift Fork
14	83503511	1	5			EM0, EV0			BRACKET, Shift Mode
15	83503510	1	5			EM0, EV0			BRACKET, Shift Mode
16	83503516	1	5			EM0, EV0			SPRING, Mode Shift Fork
17	83503515	1	5			EM0, EV0			CUP, Shift Fork Spring
18	01664355	1	5			EM0, EV0			PIN, Shift Fork
19	83504469	1	5			EM0, EV0			RAIL, Transfer Case

DAKOTA (AN)

SERIES	LINE	BODY	ENGINE	TRANSMISSION
L = Quad Cab L = Regular Cab L = Club Cab	1 = Dakota 2WD 5 = Dakota 4WD	31 = CLUB CAB 2-DR 6.5 FT BOX 61 = REG CAB 6.5 FT BOX 84 = CREW CAB 4-DR W.B.1	EPO = 2.5L 4 Cyl. EHO = 3.9L 6 Cyl. EMO = 5.9L 8 Cyl. EVO = 4.7L Magnum EHC = 3.9L SMPI V6 EML = 5.9L V8 MPI Engine EPE = 2.5L POWER TECH I-4 Cyl. EVA = 4.7L V8 MPI	DDC = TRANSMISSION - 5-SPEED HD MANUAL DG4 = TRANSMISSION-MULTI-SPEED AUTO, 45RFE DGK = TRANSMISSION - 4-SPD. AUTOMATIC,42RE DGT = TRANSMISSION - 4-SPD. AUTOMATIC,46RE DGO = AUTO. TRANS.

Gearshift Controls Full Ttime [DHC]
Figure 242-1230

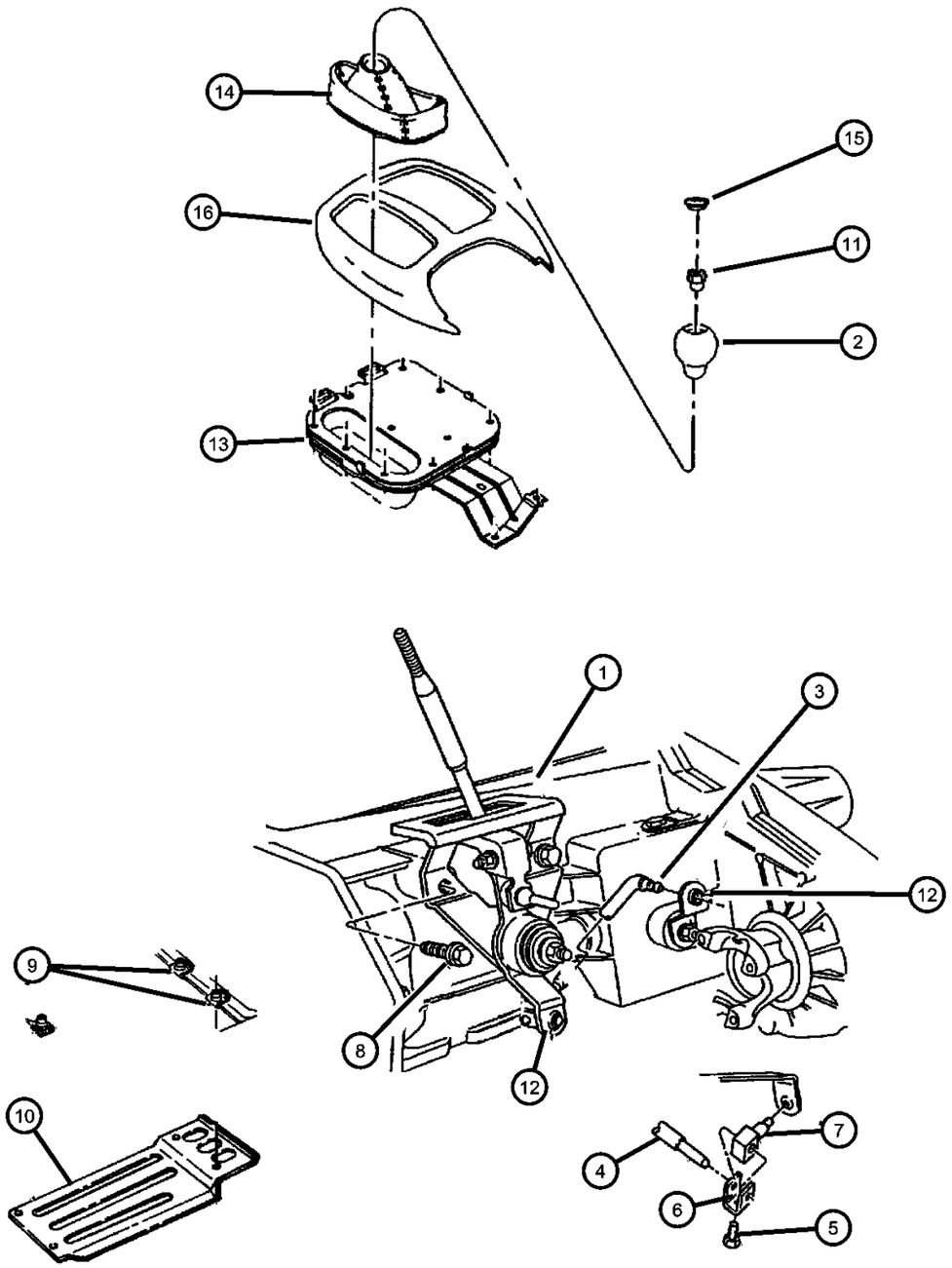

ITEM	PART NUMBER	QTY	LINE	SERIES	BODY	ENGINE	TRANS	TRIM	DESCRIPTION
ELF = 5.2L SMPI MAGNUM 8 Cyl Engine EML = 5.9L SMPI MAGNUM 8 Cyl Engine DGK = 42 RE DGT = 46 RE DGW = 44 RE									
1	52105397AC	1	5						SHIFTER, Transfer Case
2	52104174	1					DBB		KNOB, Gearshift
3	05015836AA	1	5			EM0, EV0			LEVER, Transfer Case
4	52105389AA	1	5						ROD, Gear Shift Control, Transfer Case
5	00181086	1	5						BOLT, Hex Head, .312-18x.75
6	04377309	1	5						CLAMP, Shift Rod
7	03467790	1	5						SWIVEL, Gearshift Control Rod
8	04210614	4	5			EM0, EV0			BOLT, Hex Flange Head
9	06101340	2	5						U-NUT, M10-1.50
10	52020479AB	1	5						SKID PLATE, Front
11	06502556	1					DBB		NUT, Hex, M10-1.5
12	05015837AA	1	5			EM0, EV0			GROMMET, Shift Lever
13	52107765AA	1					DBB		BOOT, Gear Shift Lever
14	52078782	1					DBB		BOOT, Gearshift
15	52105398AA	1	5						INSERT, Transfer Case Shift Knob
16									BEZEL, Gear Selector
	5GE35LAZAC	1	5				DG0		Agate (LAZ)
	5GE35RC3AC	1	5				DG0		Mist Gray (RC3)

DAKOTA (AN)

SERIES	LINE	BODY	ENGINE	TRANSMISSION
L = Quad Cab L = Regular Cab L = Club Cab	1 = Dakota 2WD 5 = Dakota 4WD	31 = CLUB CAB 2-DR 6.5 FT BOX 61 = REG CAB 6.5 FT BOX 84 = CREW CAB 4-DR W.B.1	EPO = 2.5L 4 Cyl. EHO = 3.9L 6 Cyl. EMO = 5.9L 8 Cyl. EVO = 4.7L Magnum EHC = 3.9L SMPI V6 EML = 5.9L V8 MPI Engine EPE = 2.5L POWER TECH I-4 Cyl. EVA = 4.7L V8 MPI	DDC = TRANSMISSION - 5-SPEED HD MANUAL DG4 = TRANSMISSION-MULTI-SPEED AUTO, 45RFE DGK = TRANSMISSION - 4-SPD. AUTOMATIC,42RE DGT = TRANSMISSION - 4-SPD. AUTOMATIC,46RE DGO = AUTO. TRANS.

Group - 22

Wheels, Covers and Jacks

022-100 Wheels and Hardware	022-200 Wheel Covers and Center Caps	022-300 Jack Stowage	022-400 Spare Tire Stowage
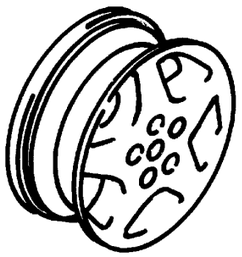	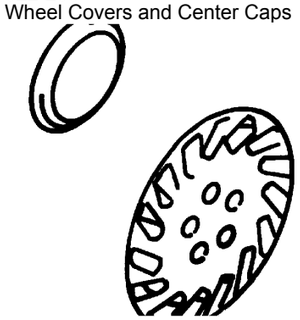	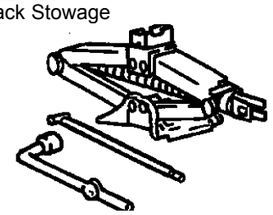	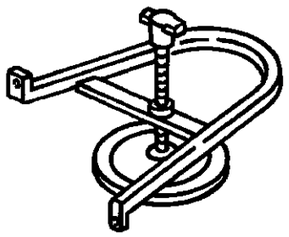

Group - 22 Wheels, Covers and Jacks

Illustration Title — Group-Fig. No.

Wheels and Hardware
Wheels And Hardware ..... Fig. 22 - 110

Wheel Covers and Center Caps
Caps And Covers, Wheel ..... Fig. 22 - 210

Jack Stowage
Jack And Storage Standard Cab ..... Fig. 22 - 310
Jack And Storage Club, Quad Cab ..... Fig. 22 - 320

Spare Tire Stowage
Wheel, Spare Underslung Mounting ..... Fig. 22 - 410

Wheels And Hardware
Figure 22-110

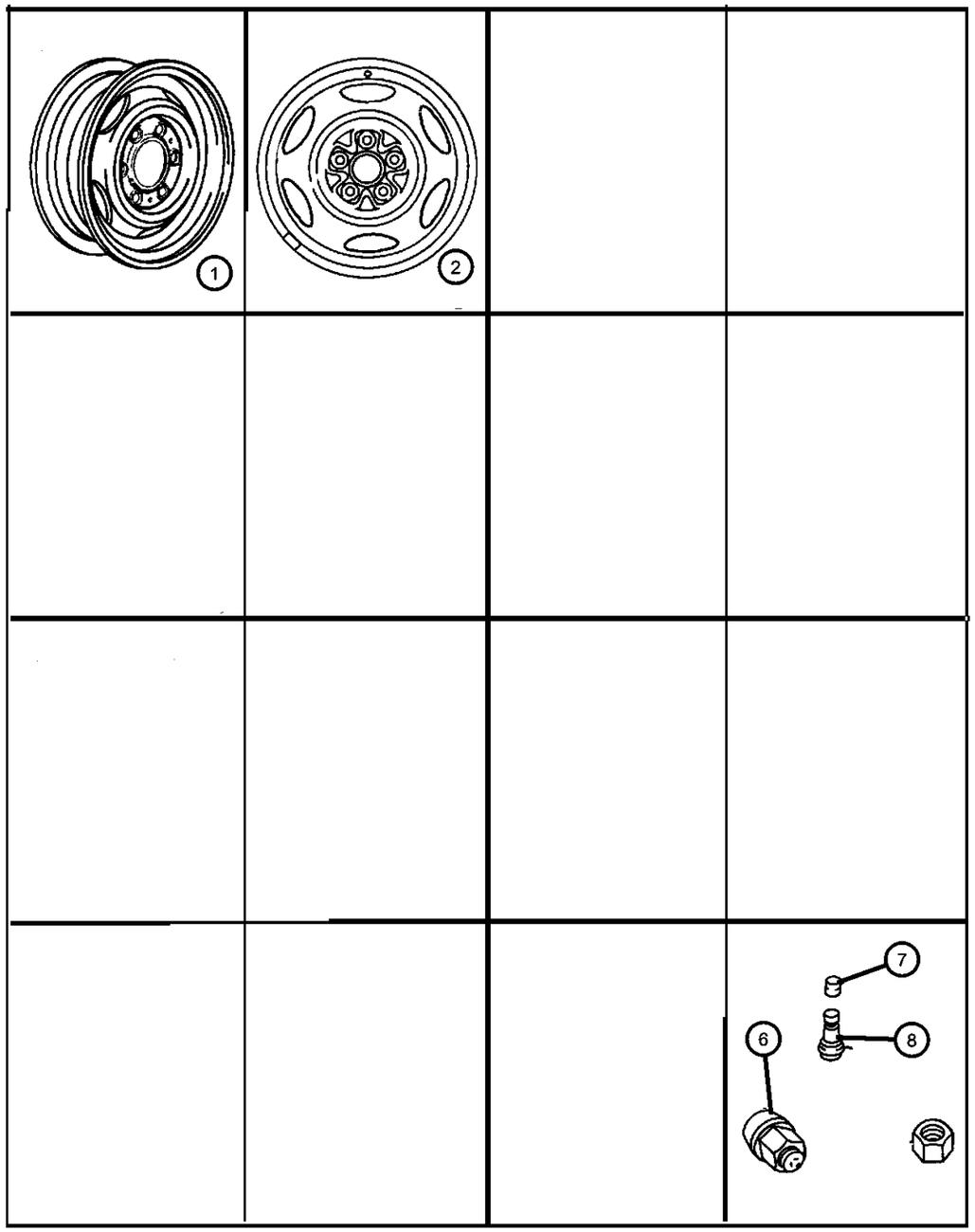

ITEM	PART NUMBER	QTY	LINE	SERIES	BODY	ENGINE	TRANS	TRIM	DESCRIPTION
Note: Sales Code WJ1 = 15x7.0 Aluminum Wheels									
Note: Sales Code WJ9 = 15x8.0 Aluminum Wheels									
Note: Sales Code WFR = 17x9.0 Aluminum Wheels									
1	52057797	1			31, 61, 84				WHEEL, Steel, 15x6.0, Steel
2	5GU04S4AAA	4							WHEEL, Steel, 15x7.0, Steel (WJD)
-3	5EK51PAK	4							WHEEL, Aluminum, 15x7.0, Aluminum (WJ1)
-4									WHEEL, Aluminum
	5EB37PAK	4							15x8.0 Aluminum, (WJ9), Up To 3-1-99
	5EB37PAKAC	4			31, 61				15x8.0 Aluminum, (WJ9), After 3-1-99
		4			84				15x8.0 Aluminum, (WJ9), After 3-1-99
-5	5FS38PAK	1	1		31, 61				WHEEL, Aluminum, 17x9 (WFR)
6									NUT, Wheel, .50x20
	06036310AA	24							[WJ9]
	J4006956	24							[WJ1]
7	J4006956	24							CAP, (NOT SERVICED),
8	02073355	1							STEM, Wheel Valve
-9	06034958	24							NUT, Hex, .50-20

DAKOTA (AN)

SERIES	LINE	BODY	ENGINE	TRANSMISSION
L = Quad Cab L = Regular Cab L = Club Cab	1 = Dakota 2WD 5 = Dakota 4WD	31 = CLUB CAB 2-DR 6.5 FT BOX 61 = REG CAB 6.5 FT BOX 84 = CREW CAB 4-DR W.B.1	EPO = 2.5L 4 Cyl. EHO = 3.9L 6 Cyl. EMO = 5.9L 8 Cyl. EVO = 4.7L Magnum EHC = 3.9L SMPI V6 EML = 5.9L V8 MPI Engine EPE = 2.5L POWER TECH I-4 Cyl. EVA = 4.7L V8 MPI	DDC = TRANSMISSION - 5-SPEED HD MANUAL DG4 = TRANSMISSION-MULTI-SPEED AUTO, 45RFE DGK = TRANSMISSION - 4-SPD. AUTOMATIC,42RE DGT = TRANSMISSION - 4-SPD. AUTOMATIC,46RE DGO = AUTO. TRANS.

Caps And Covers, Wheel
Figure 22-210

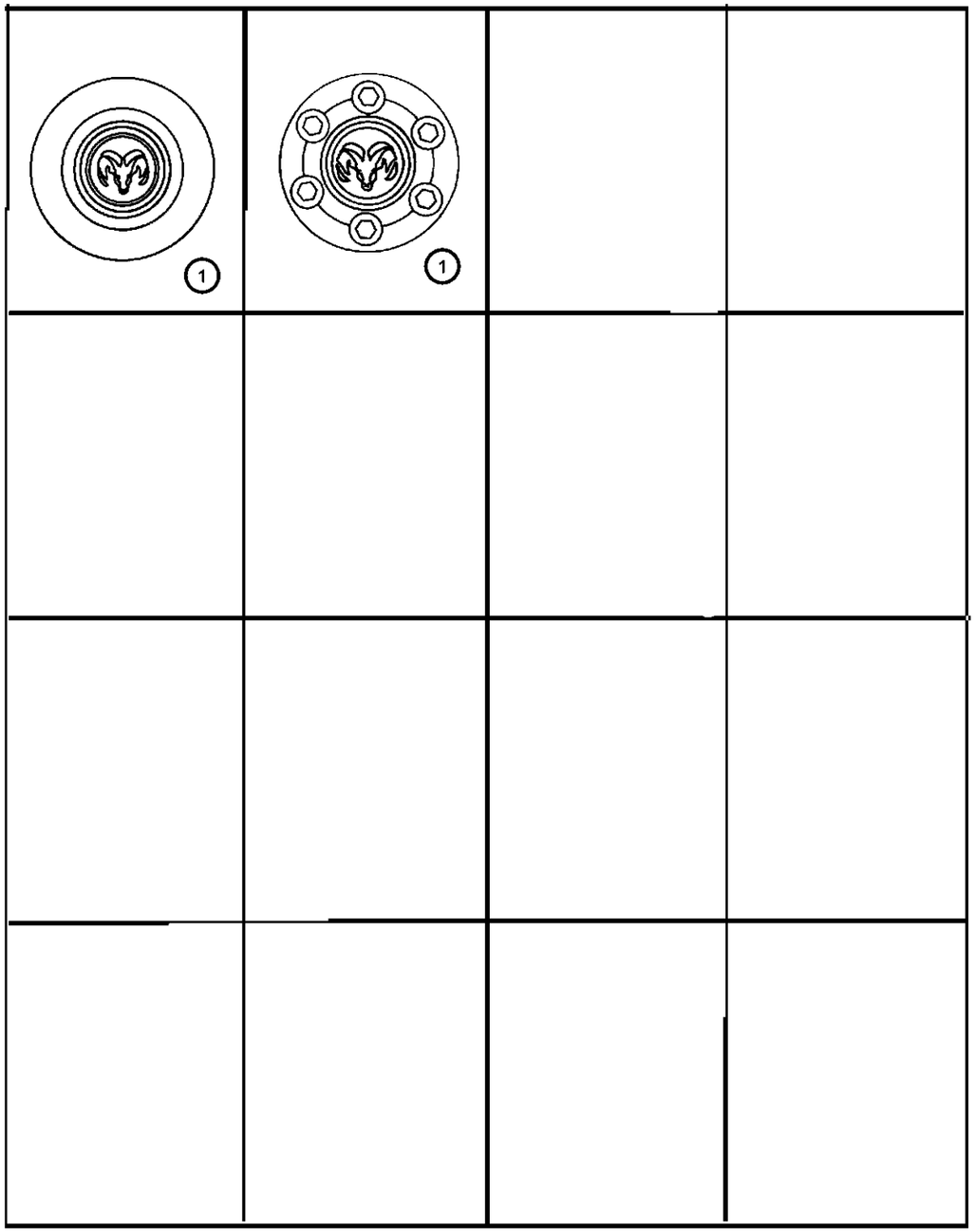

ITEM	PART NUMBER	QTY	LINE	SERIES	BODY	ENGINE	TRANS	TRIM	DESCRIPTION
Note: Sales Code WJK = 15x6.0 Steel Wheels									
Note: Sales Code WJ5 = 15x7.0 Steel Wheels									
Note: Sales Code WJ1 = 15x7.0 Aluminum Wheels									
Note: Sales Code WJ9 = 15x8.0 Aluminum Wheels									
Note: Sales Code WFR = 17x9.0 Aluminum Wheels									
1									CAP, Wheel Center
	04753123	4							w/15x7.0 Painted (WJ9)
	5EN14PAK	1							w/15x6.0 Painted (WJ1)
	5GH55PAKAA	4	1		31, 61				w/17x9.0 Aluminum (WFR)
	5GR02DX9AA	4							(WJD)

DAKOTA (AN)

SERIES	LINE	BODY	ENGINE	TRANSMISSION
L = Quad Cab L = Regular Cab L = Club Cab	1 = Dakota 2WD 5 = Dakota 4WD	31 = CLUB CAB 2-DR 6.5 FT BOX 61 = REG CAB 6.5 FT BOX 84 = CREW CAB 4-DR W.B.1	EPO = 2.5L 4 Cyl. EHO = 3.9L 6 Cyl. EMO = 5.9L 8 Cyl. EVO = 4.7L Magnum EHC = 3.9L SMPI V6 EML = 5.9L V8 MPI Engine EPE = 2.5L POWER TECH I-4 Cyl. EVA = 4.7L V8 MPI	DDC = TRANSMISSION - 5-SPEED HD MANUAL DG4 = TRANSMISSION-MULTI-SPEED AUTO, 45RFE DGK = TRANSMISSION - 4-SPD. AUTOMATIC,42RE DGT = TRANSMISSION - 4-SPD. AUTOMATIC,46RE DGO = AUTO. TRANS.

Jack And Storage Standard Cab
Figure 22-310

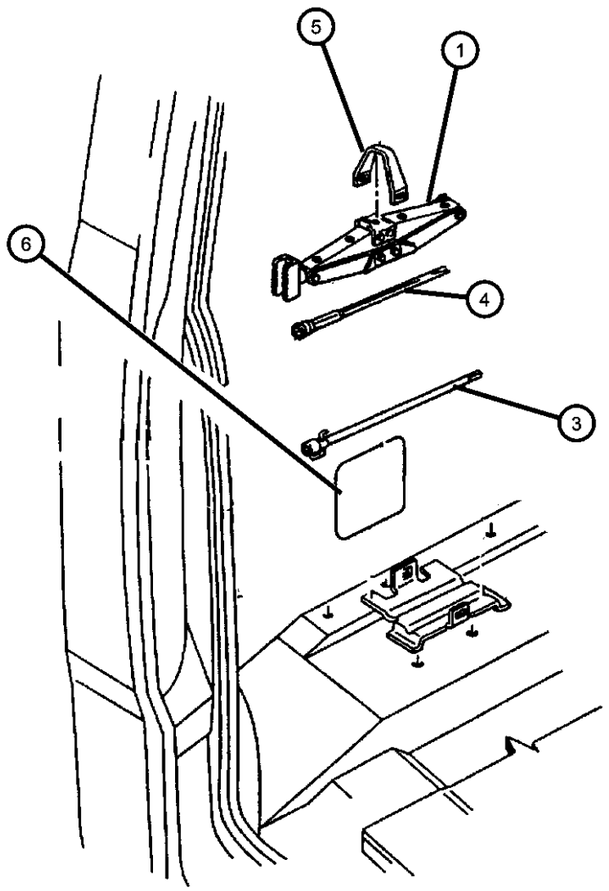

ITEM	PART NUMBER	QTY	LINE	SERIES	BODY	ENGINE	TRANS	TRIM	DESCRIPTION
1	52019921AB	1							JACK
-2	55350304AB	1							BAG, Jack Tool Storage
3	52019870	2							EXTENSION, Jack Handle T Bar
4	52039118	1							DRIVER, Jack Handle
5	55257276AA	1			61				BRACKET, Jack
6	55257276AA	1							LABEL, Jack Instructions, 52019655, (NOT SERVICED)
-7	52019871AB	1							TOOL, Wrench

DAKOTA (AN)

SERIES	LINE	BODY	ENGINE	TRANSMISSION
L = Quad Cab	1 = Dakota 2WD	31 = CLUB CAB 2-DR 6.5 FT BOX	EPO = 2.5L 4 Cyl.	DDC = TRANSMISSION - 5-SPEED HD MANUAL
L = Regular Cab	5 = Dakota 4WD	61 = REG CAB 6.5 FT BOX	EHO = 3.9L 6 Cyl.	DG4 = TRANSMISSION-MULTI-SPEED AUTO, 45RFE
L = Club Cab		84 = CREW CAB 4-DR W.B.1	EMO = 5.9L 8 Cyl.	DGK = TRANSMISSION - 4-SPD. AUTOMATIC,42RE
			EVO = 4.7L Magnum	DGT = TRANSMISSION - 4-SPD. AUTOMATIC,46RE
			EHC = 3.9L SMPI V6	DGO = AUTO. TRANS.
			EML = 5.9L V8 MPI Engine	
			EPE = 2.5L POWER TECH I-4 Cyl.	
			EVA = 4.7L V8 MPI	

Jack And Storage Club, Quad Cab
Figure 22-320

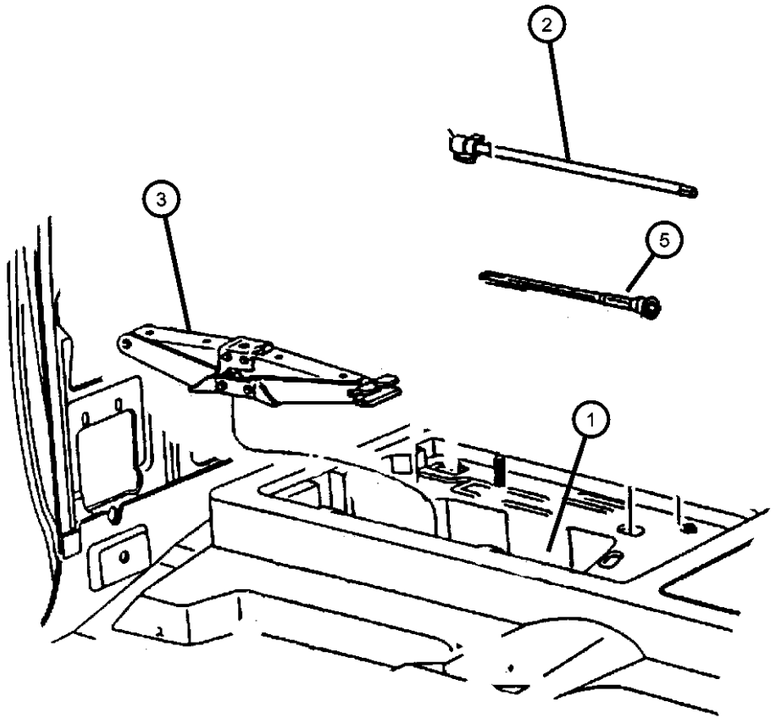

ITEM	PART NUMBER	QTY	LINE	SERIES	BODY	ENGINE	TRANS	TRIM	DESCRIPTION
1	52019871AB	1							LABEL, Jack Instructions, 52019655, (NOT SERVICED)
2	52019870	2							EXTENSION, Jack Handle T Bar
3	52019921AB	1							JACK
-4	55350304AB	1							BAG, Jack Tool Storage
5	52039118	1							DRIVER, Jack Handle
-6	52019871AB	1							TOOL, Wrench
-7	52021315AB	1			84				STRAP, Jack Storage

DAKOTA (AN)

SERIES	LINE	BODY	ENGINE	TRANSMISSION
L = Quad Cab L = Regular Cab L = Club Cab	1 = Dakota 2WD 5 = Dakota 4WD	31 = CLUB CAB 2-DR 6.5 FT BOX 61 = REG CAB 6.5 FT BOX 84 = CREW CAB 4-DR W.B.1	EPO = 2.5L 4 Cyl. EHO = 3.9L 6 Cyl. EMO = 5.9L 8 Cyl. EVO = 4.7L Magnum EHC = 3.9L SMPI V6 EML = 5.9L V8 MPI Engine EPE = 2.5L POWER TECH I-4 Cyl. EVA = 4.7L V8 MPI	DDC = TRANSMISSION - 5-SPEED HD MANUAL DG4 = TRANSMISSION-MULTI-SPEED AUTO, 45RFE DGK = TRANSMISSION - 4-SPD. AUTOMATIC,42RE DGT = TRANSMISSION - 4-SPD. AUTOMATIC,46RE DGO = AUTO. TRANS.

Wheel, Spare Underslung Mounting
Figure 22-410

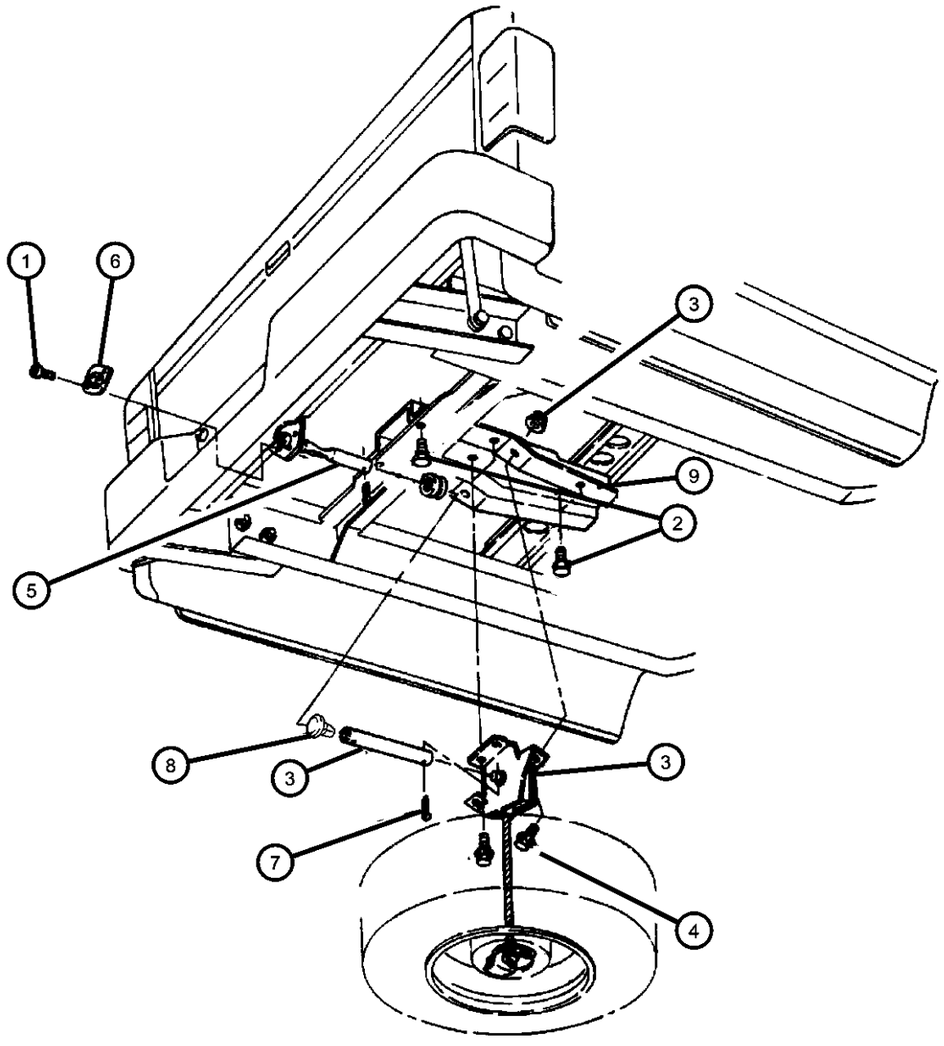

ITEM	PART NUMBER	QTY	LINE	SERIES	BODY	ENGINE	TRANS	TRIM	DESCRIPTION
1	52021315AB	1							SCREW, (NOT SERVICED)
2	52021315AB	1							SCREW, (NOT SERVICED)
3	52019555	1							WINCH, Spare Tire Carrier
4	06100295	2							SCREW AND WASHER, Hex Head, M8x1.25x20
5									EXTENSION, Spare Tire Winch
	52019565	1			31, 61				
	52019885	1			84				
6	52019659	1							GROMMET, Spare Tire Winch Tube
7	00120123	2							PIN, Cotter
8	02860332	1							PLUG, Anti-Rattle
9									CROSSMEMBER, Underbody
	04883190AB	1	1		61				
		1	1		31				
		1	1		84				
		1	5		61				
		1	5		31				
		1	5		84				

DAKOTA (AN)

SERIES	LINE	BODY	ENGINE	TRANSMISSION
L = Quad Cab	1 = Dakota 2WD	31 = CLUB CAB 2-DR 6.5 FT BOX	EPO = 2.5L 4 Cyl.	DDC = TRANSMISSION - 5-SPEED HD MANUAL
L = Regular Cab	5 = Dakota 4WD	61 = REG CAB 6.5 FT BOX	EHO = 3.9L 6 Cyl.	DG4 = TRANSMISSION-MULTI-SPEED AUTO, 45RFE
L = Club Cab		84 = CREW CAB 4-DR W.B.1	EMO = 5.9L 8 Cyl.	DGK = TRANSMISSION - 4-SPD. AUTOMATIC,42RE
			EVO = 4.7L Magnum	DGT = TRANSMISSION - 4-SPD. AUTOMATIC,46RE
			EHC = 3.9L SMPI V6	DGO = AUTO. TRANS.
			EML = 5.9L V8 MPI Engine	
			EPE = 2.5L POWER TECH I-4 Cyl.	
			EVA = 4.7L V8 MPI	

Group - 23D

Wiper/Lock Cylinder and Keys

23D-100 Lock Cylinders and Keys 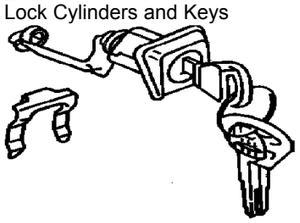	**23D-200** Windshield Wiper and Washer Systems 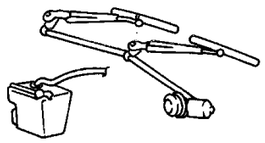		

Group - 23D Wiper/Lock Cylinder and Keys

Illustration Title — Group-Fig. No.

Lock Cylinders and Keys
Lock Cylinders & Components ..... Fig. 23D - 110

Windshield Wiper and Washer Systems
Windshield Wiper & Washer ..... Fig. 23D - 210

Lock Cylinders & Components
Figure 23D-110

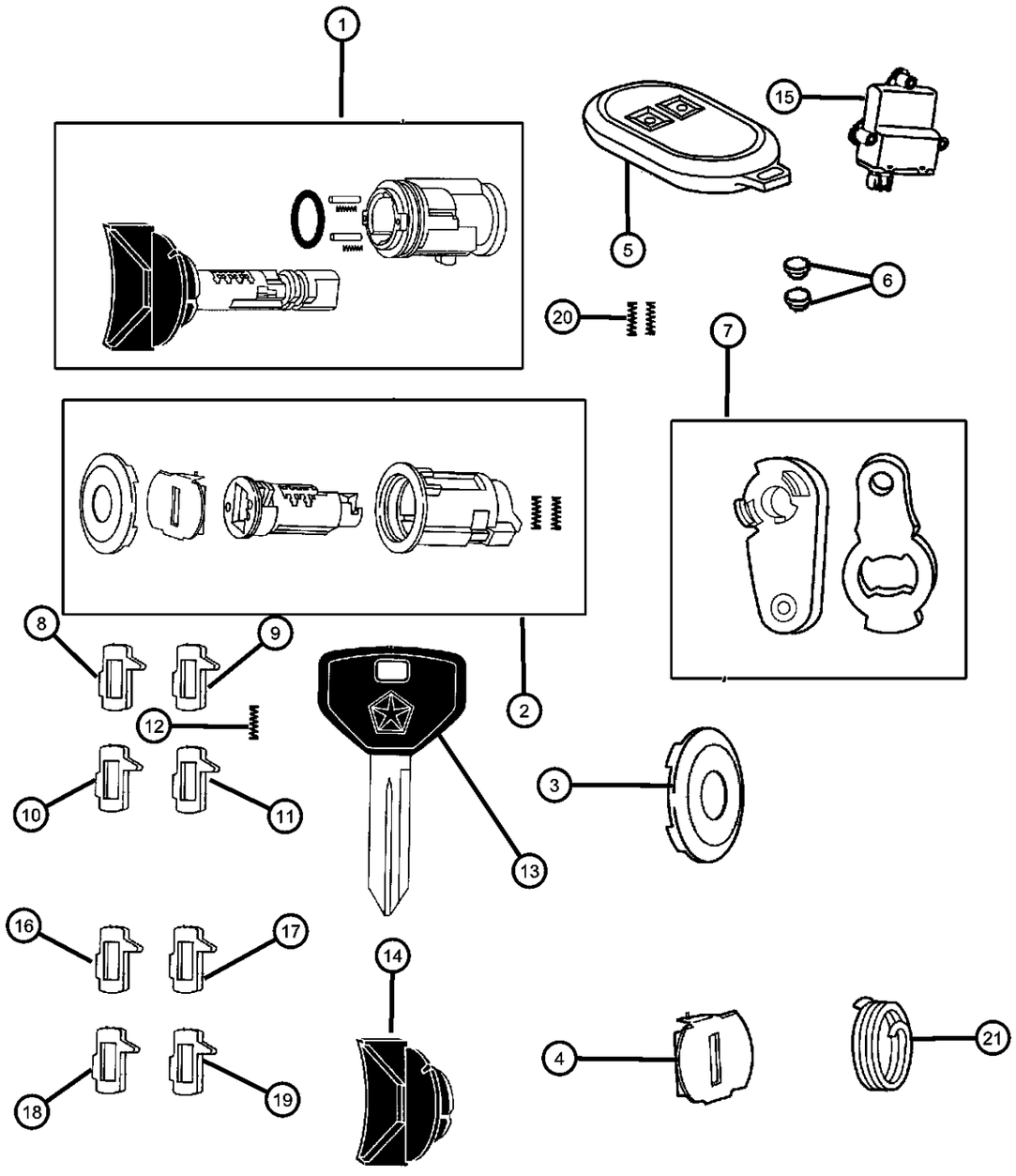

ITEM	PART NUMBER	QTY	LINE	SERIES	BODY	ENGINE	TRANS	TRIM	DESCRIPTION
NOTE: ALL LOCK CYLINDERS ARE UNCODED									
1	05003845AA	1							CYLINDER, Ignition Lock
2	04778125	1							LOCK CYLINDER, Door/Liftgate
3	04778149	1							CAP, Door Lock Cylinder, Bright
4	04778150	1							SHUTTER, Door, Deck and Liftgate, Bright
5	56045497AA	2			31, 61, 84				TRANSMITTER, Keyless Entry
6	83504802	2							BATTERY, Transmitter
7	04717288	1							LEVER, Front Door Cylinder
8	05010879AA	1							TUMBLER, Ignition Number 1, Sidebar
9	05010880AA	1							TUMBLER, Ignition Number 2, Sidebar
10	05010881AA	1							TUMBLER, Ignition Number 3, Sidebar
11	05010882AA	1							TUMBLER, Ignition Number 4, Sidebar
12	05010883AA	1							SPRING, Ignition Tumbler, Sidebar
13	04796386	1							KEY, Blank
14	04796386	1							CAP, Ignition Cylinder, Black Plastic, Serviced w/Ignition Cylinder, (NOT SERVICED)
15									MODULE, Time and Alarm
	56021223AM	1			84				w/Keyless Entry
	56045410AC	1			31, 61				w/o Keyless Entry
		1			84				w/o Keyless Entry
	56045605AA	1			31, 61				W/Keyless Entry (Up to 10/07/99)
	56045605AB	1			31, 61				W/Keyless Entry (10/07/99 & After)
16	04778117	1							TUMBLER, Door and Deck Number 1, Wide
17	04778118	1							TUMBLER, Door and Deck Number 2, Wide
18	04778119	1							TUMBLER, Door and Deck Number 3, Wide
19	04778120	1							TUMBLER, Door and Deck Number 4, Wide
20	04778121	1							SPRING, Door and Deck Tumbler
21	04378793	1							SPRING, Cylinder Return

DAKOTA (AN)

SERIES	LINE	BODY	ENGINE	TRANSMISSION
L = Quad Cab L = Regular Cab L = Club Cab	1 = Dakota 2WD 5 = Dakota 4WD	31 = CLUB CAB 2-DR 6.5 FT BOX 61 = REG CAB 6.5 FT BOX 84 = CREW CAB 4-DR W.B.1	EPO = 2.5L 4 Cyl. EHO = 3.9L 6 Cyl. EMO = 5.9L 8 Cyl. EVO = 4.7L Magnum EHC = 3.9L SMPI V6 EML = 5.9L V8 MPI Engine EPE = 2.5L POWER TECH I-4 Cyl. EVA = 4.7L V8 MPI	DDC = TRANSMISSION - 5-SPEED HD MANUAL DG4 = TRANSMISSION-MULTI-SPEED AUTO, 45RFE DGK = TRANSMISSION - 4-SPD. AUTOMATIC,42RE DGT = TRANSMISSION - 4-SPD. AUTOMATIC,46RE DGO = AUTO. TRANS.

Lock Cylinders & Components
Figure 23D-110

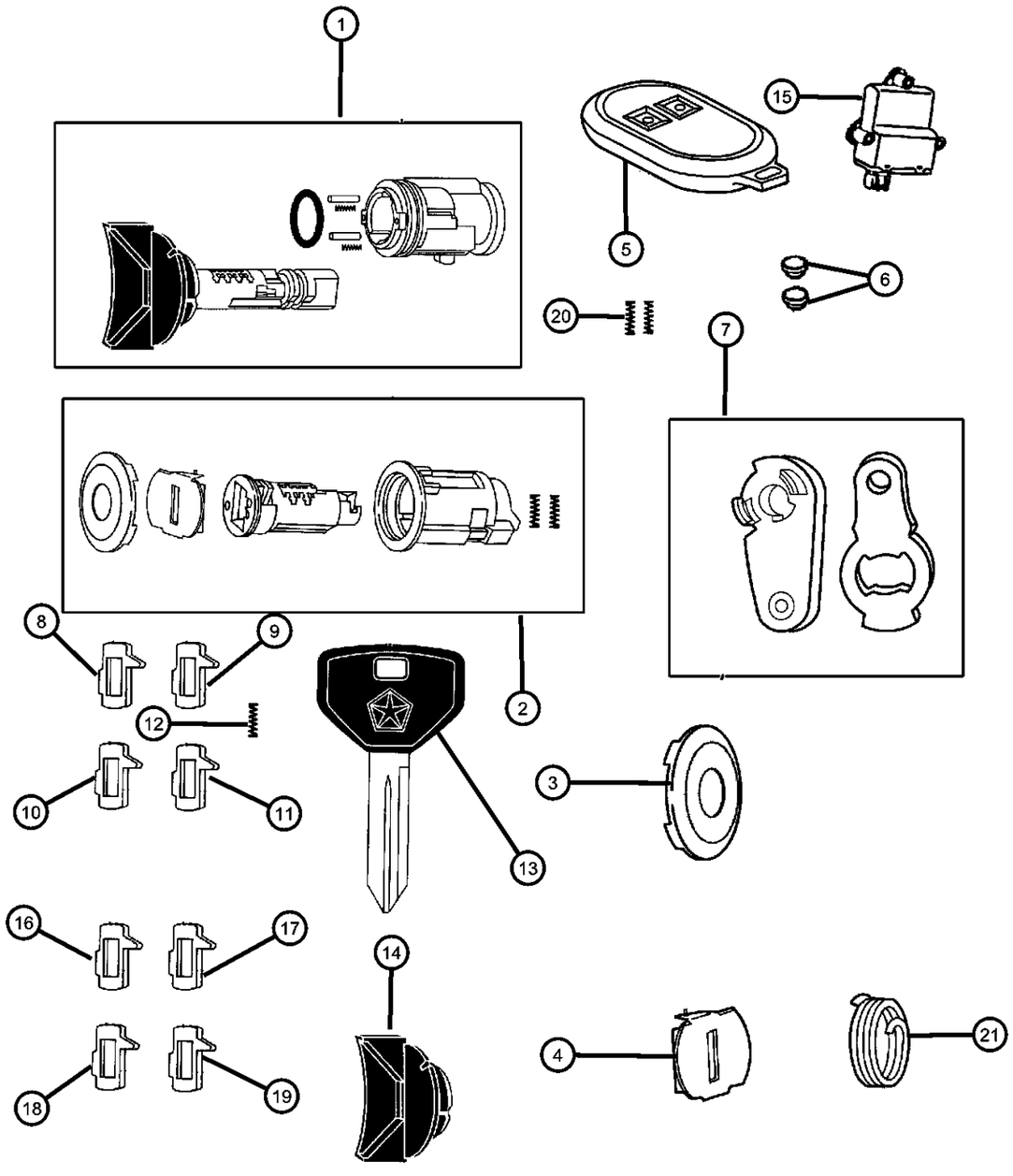

ITEM	PART NUMBER	QTY	LINE	SERIES	BODY	ENGINE	TRANS	TRIM	DESCRIPTION
-22									CLIP, Latch
	04658444	1			31, 61, 84				Purple
	04658445	1			31, 61, 84				Orange

DAKOTA (AN)

SERIES	LINE	BODY	ENGINE	TRANSMISSION
L = Quad Cab L = Regular Cab L = Club Cab	1 = Dakota 2WD 5 = Dakota 4WD	31 = CLUB CAB 2-DR 6.5 FT BOX 61 = REG CAB 6.5 FT BOX 84 = CREW CAB 4-DR W.B.1	EPO = 2.5L 4 Cyl. EHO = 3.9L 6 Cyl. EMO = 5.9L 8 Cyl. EVO = 4.7L Magnum EHC = 3.9L SMPI V6 EML = 5.9L V8 MPI Engine EPE = 2.5L POWER TECH I-4 Cyl. EVA = 4.7L V8 MPI	DDC = TRANSMISSION - 5-SPEED HD MANUAL DG4 = TRANSMISSION-MULTI-SPEED AUTO, 45RFE DGK = TRANSMISSION - 4-SPD. AUTOMATIC,42RE DGT = TRANSMISSION - 4-SPD. AUTOMATIC,46RE DGO = AUTO. TRANS.

Windshield Wiper & Washer
Figure 23D-210

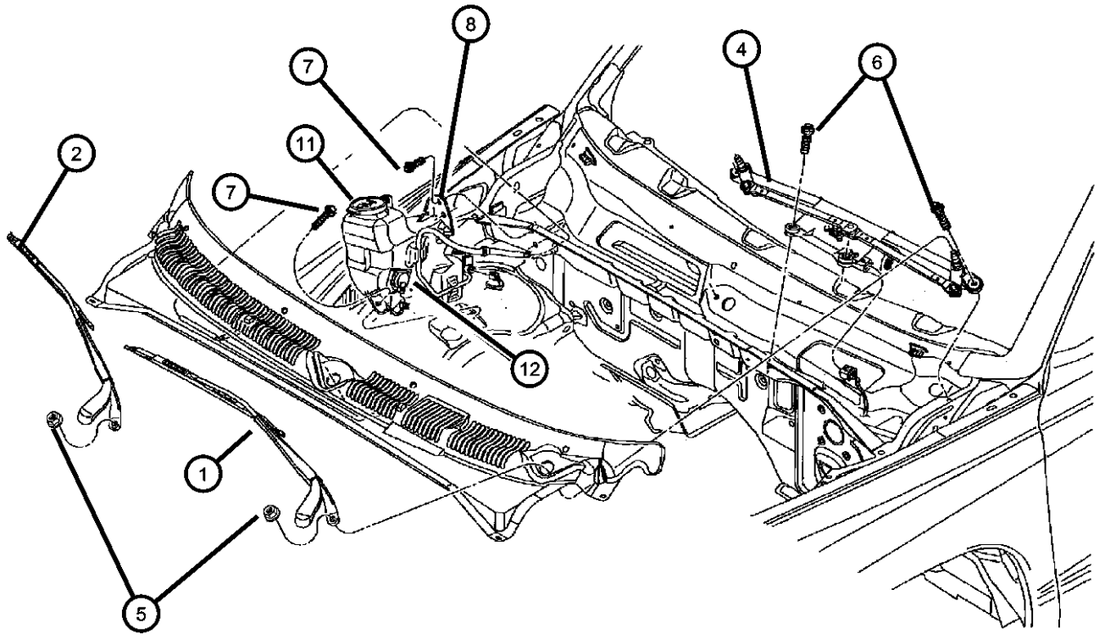

ITEM	PART NUMBER	QTY	LINE	SERIES	BODY	ENGINE	TRANS	TRIM	DESCRIPTION
1									ARM, Wiper
	55154854AD	1			31, 61, 84				Right
	WBFLAT03AA								Mopar Alternative Flat Blade Set
	55154897AC	1			31, 61, 84				Left
	WBFLAT03AA								Mopar Alternative Flat Blade Set
2									BLADE, Wiper
	55077090AB	1							Right
	WBW00021AD								Mopar Alternative Winter Wiper Blades
	WB000021AE								Mopar V-Line Alternative Part
	WB-BLU021AA								Mopar Alternative Color Wiper Blade (Blue)
	WBRED021AA								Mopar Alternative Color Wiper Blade (Red)
	WBYEL021AA								Mopar Alternative Color Wiper Blade (Yellow)
	WB-WHI021AA								Mopar Alternative Color Wiper Blade (White)
	WB-CAR021AA								Mopar Alternative Color Wiper Blade (Carbon Fiber)
	55077091AA	1							Left
	WBW00020AD								Mopar Alternative Winter Wiper Blades
	WB000020AE								Mopar V-Line Alternative Part
	WB-BLU020AA								Mopar Alternative Color Wiper Blade (Blue)
	WBRED020AA								Mopar Alternative Color Wiper Blade (Red)
	WBYEL020AA								Mopar Alternative Color Wiper Blade (Yellow)
	WB-WHI020AA								Mopar Alternative Color Wiper Blade (White)
	WB-CAR020AA								Mopar Alternative Color Wiper Blade (Carbon Fiber)
-3									NOZZLE, Washer, Windshield
	55077338AA	2			84				
		2			31, 61				
4	55154863AC	1							MOTOR, Wiper
5	06503335	2							NUT, Hex, M10X1.25

DAKOTA (AN)

SERIES	LINE	BODY	ENGINE	TRANSMISSION
L = Quad Cab L = Regular Cab L = Club Cab	1 = Dakota 2WD 5 = Dakota 4WD	31 = CLUB CAB 2-DR 6.5 FT BOX 61 = REG CAB 6.5 FT BOX 84 = CREW CAB 4-DR W.B.1	EPO = 2.5L 4 Cyl. EHO = 3.9L 6 Cyl. EMO = 5.9L 8 Cyl. EVO = 4.7L Magnum EHC = 3.9L SMPI V6 EML = 5.9L V8 MPI Engine EPE = 2.5L POWER TECH I-4 Cyl. EVA = 4.7L V8 MPI	DDC = TRANSMISSION - 5-SPEED HD MANUAL DG4 = TRANSMISSION-MULTI-SPEED AUTO, 45RFE DGK = TRANSMISSION - 4-SPD. AUTOMATIC,42RE DGT = TRANSMISSION - 4-SPD. AUTOMATIC,46RE DGO = AUTO. TRANS.

Windshield Wiper & Washer
Figure 23D-210

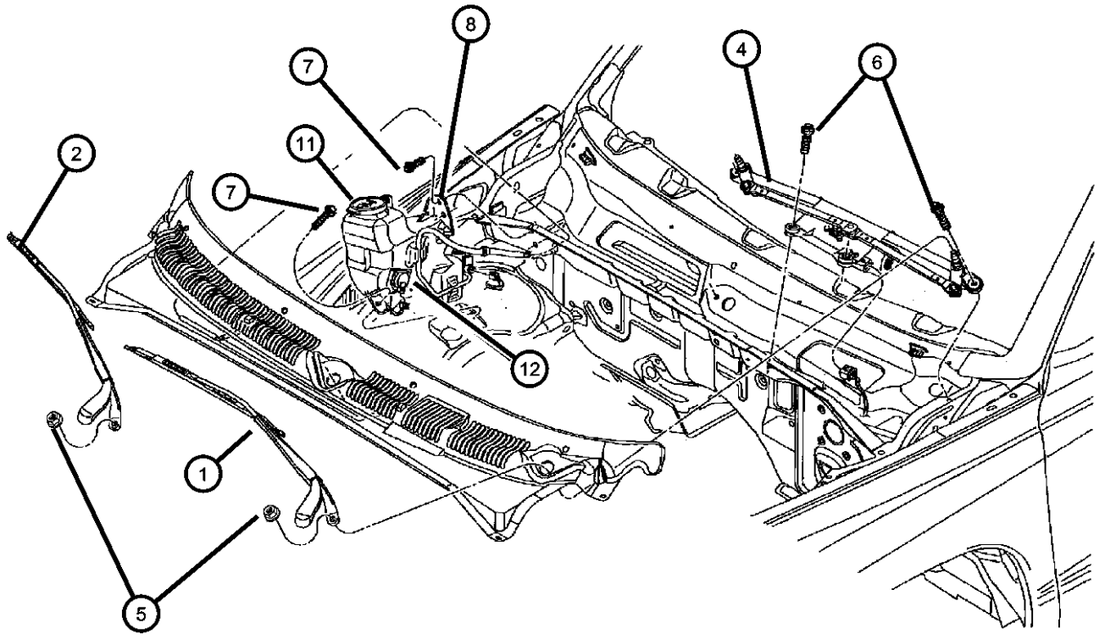

ITEM	PART NUMBER	QTY	LINE	SERIES	BODY	ENGINE	TRANS	TRIM	DESCRIPTION
6									BOLT AND WASHER, Implement Attaching
	06100568	5			31				
		4							
7		4							SCREW, (NOT SERVICED)
8									SHROUD MODULE, Fan
	05015532AB	1							With Washer Reservoir [EH0]
	05015534AB	1							With Washer Reservoir [EP0] [EM0]
-9	04882797	1			31, 61, 84				SENSOR, Washer Fluid Level
-10	05013755AA	1							GROMMET, Washer Reservoir
11	55077261AA	1							CAP, Washer Reservoir
12	55077301AB	1							PUMP, Washer, Windshield
-13	55155765AA	2							CAP, Wiper Arm Nut
-14	55077204AA	1							HOSE, Washer Reservoir
-15									HOSE, Windshield Washer
	55077339AA	1			84				With Check Valve (Cowl Grille)
		1			31, 61				With Check Valve (Cowl Grille)

DAKOTA (AN)

SERIES	LINE	BODY	ENGINE	TRANSMISSION
L = Quad Cab L = Regular Cab L = Club Cab	1 = Dakota 2WD 5 = Dakota 4WD	31 = CLUB CAB 2-DR 6.5 FT BOX 61 = REG CAB 6.5 FT BOX 84 = CREW CAB 4-DR W.B.1	EPO = 2.5L 4 Cyl. EHO = 3.9L 6 Cyl. EMO = 5.9L 8 Cyl. EVO = 4.7L Magnum EHC = 3.9L SMPI V6 EML = 5.9L V8 MPI Engine EPE = 2.5L POWER TECH I-4 Cyl. EVA = 4.7L V8 MPI	DDC = TRANSMISSION - 5-SPEED HD MANUAL DG4 = TRANSMISSION-MULTI-SPEED AUTO, 45RFE DGK = TRANSMISSION - 4-SPD. AUTOMATIC,42RE DGT = TRANSMISSION - 4-SPD. AUTOMATIC,46RE DGO = AUTO. TRANS.

Group - 24

Air Conditioning & Heater

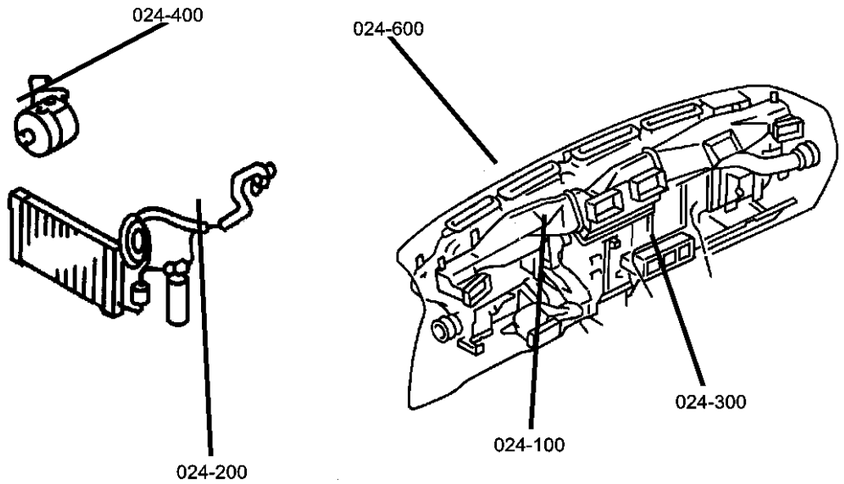

024-100 Air Conditioner and Heater Units 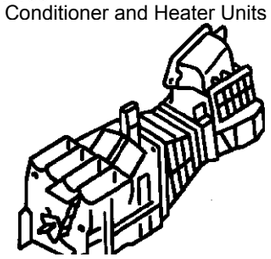	**024-200** Air Conditioner and Heater Plumbing 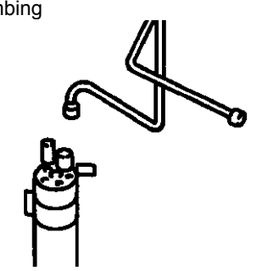	**024-300** Air Conditioner and Heater Controls 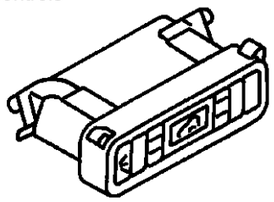	**024-400** Air Conditioning Compressor 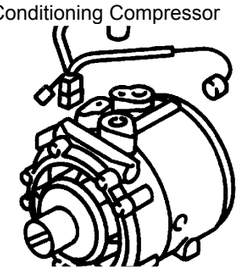
024-500 Air Conditioning Compressor Mounting 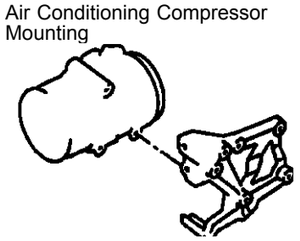	**024-600** Air Ducts and Outlets 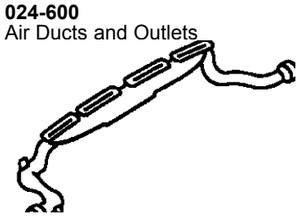		

Group - 24 Air Conditioning & Heater

Illustration Title — Group-Fig. No.

Air Conditioner and Heater Units
Heater Unit ..... Fig. 24 - 105
Hevac Unit ..... Fig. 24 - 110

Air Conditioner and Heater Plumbing
Plumbing, Heater And Air Conditioning ..... Fig. 24 - 210

Air Conditioner and Heater Controls
Control, Heater ..... Fig. 24 - 305
Control, Air Conditioning ..... Fig. 24 - 310

Air Conditioning Compressor
Compressor, A/c. ..... Fig. 24 - 405

Air Conditioning Compressor Mounting
Mounting, Compressor 2.5L Engine ..... Fig. 24 - 505
Mounting, Compressor 3.9L, 5.9L Engine ..... Fig. 24 - 507
Compressor, Air Conditioning 4.7L Engine ..... Fig. 24 - 510
Mounting, Compressor 4.7L Engine ..... Fig. 24 - 520

Air Ducts and Outlets
Demister System ..... Fig. 24 - 605

Heater Unit
Figure 24-105

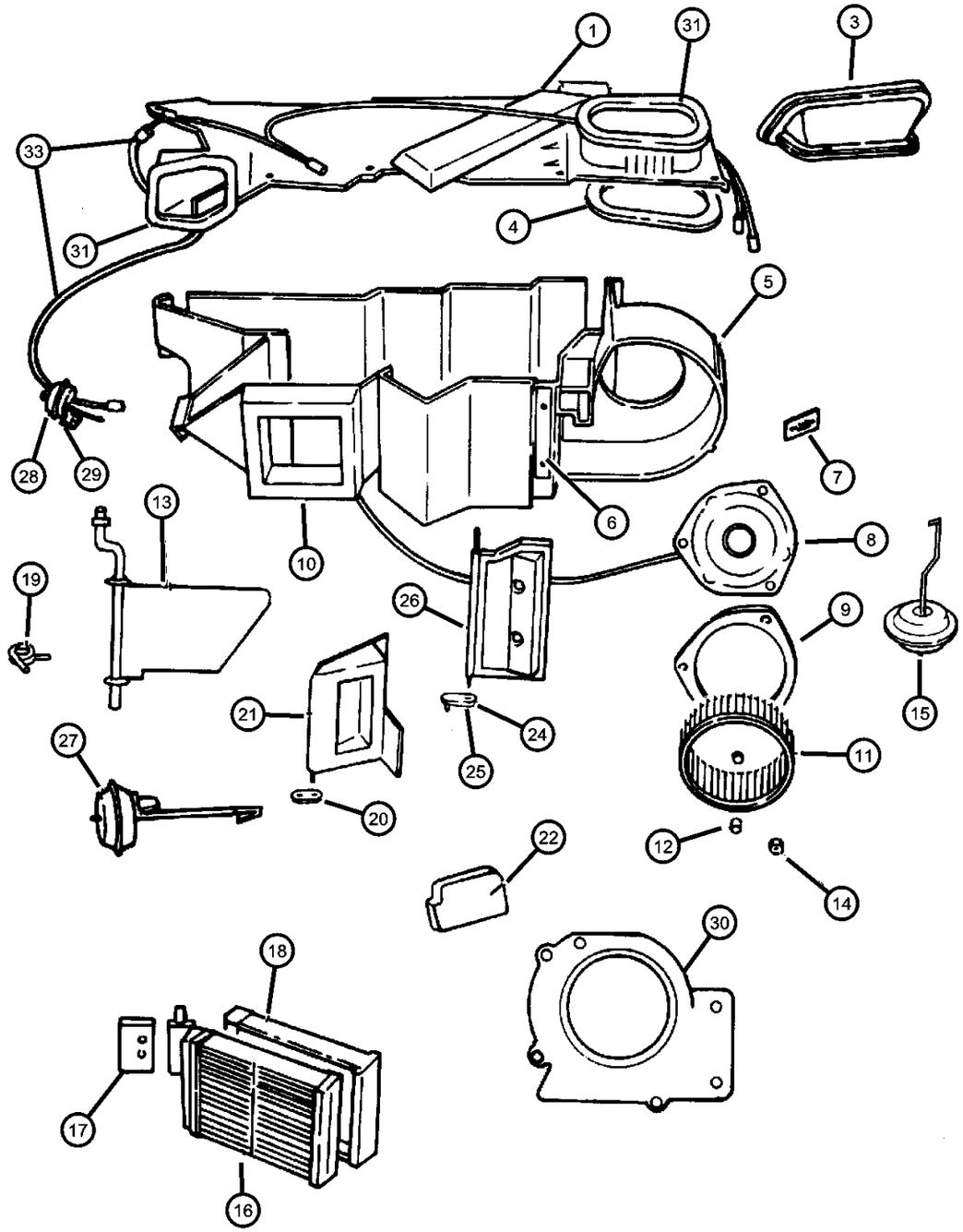

ITEM	PART NUMBER	QTY	LINE	SERIES	BODY	ENGINE	TRANS	TRIM	DESCRIPTION
1	04734712	1							COVER, Evaporator Housing
-2	05061039AA	1							SEAL, Evaporator Housing
3	55036845	1							ADAPTER, A/C And Heater Unit
4	55036845	1							SEAL, (NOT SERVICED)
5	04734714AB	1							HOUSING AND STUD, Air Recirculating
6	55036873	1							BRACE
7	55056041AA	1							RESISTOR, Blower Motor
8	05264068	1							MOTOR, Heater Blower
	R5264068								Mopar Remanufactured Part
9	03847476	1			31, 61, 84				SEAL, Blower Motor
10	05210336	1			31, 61, 84				SEAL, Distribution Duct
11	04462674	1							BLOWER
12	02837680	1			31, 61, 84				CLAMP, Blower Motor Wheel
13	55055982AA	1							DOOR, Defroster
14	06031694	3			31, 61, 84				SCREW AND WASHER, Hex Head, .164-18x1.0
15	05210111AB	1							ACTUATOR, Heater
16	04644228AB	1							CORE, Heater
17	05210109	1							SEAL, Heater Core Tubes
18	03848093AB	1			84, 31, 61				SEAL, Heater Core
19	03847853	1							SPRING, A/C Heater Mode Door
20	03847858	1							LEVER, Mode Door
21	04462687	1							DOOR, Mode
22	04644059	1							SEAL, Evaporator Cover
-23	05264393	1			31, 61, 84				SEAL, Drain To Dash
24	04734719AB	1							LEVER, Blend Air Door
25	06033560	2				EP0			NUT AND WASHER, Hex Nut-Coned Washer, .25-20
26	04734301AB	1			31, 61, 84				DOOR, Blend Air
27	04462694	1							ACTUATOR, Heater
28	04734716	1			31, 61, 84				ACTUATOR, Heater
29	06031147	1							NUT, Hex, M6x1.00
30	04462690	1							HOUSING, Air Recirculating

DAKOTA (AN)

SERIES	LINE	BODY	ENGINE	TRANSMISSION
L = Quad Cab	1 = Dakota 2WD	31 = CLUB CAB 2-DR 6.5 FT BOX	EPO = 2.5L 4 Cyl.	DDC = TRANSMISSION - 5-SPEED HD MANUAL
L = Regular Cab	5 = Dakota 4WD	61 = REG CAB 6.5 FT BOX	EHO = 3.9L 6 Cyl.	DG4 = TRANSMISSION-MULTI-SPEED AUTO, 45RFE
L = Club Cab		84 = CREW CAB 4-DR W.B.1	EMO = 5.9L 8 Cyl.	DGK = TRANSMISSION - 4-SPD. AUTOMATIC,42RE
			EVO = 4.7L Magnum	DGT = TRANSMISSION - 4-SPD. AUTOMATIC,46RE
			EHC = 3.9L SMPI V6	DGO = AUTO. TRANS.
			EML = 5.9L V8 MPI Engine	
			EPE = 2.5L POWER TECH I-4 Cyl.	
			EVA = 4.7L V8 MPI	

AR = use ase required - = Non illustrrated part

Heater Unit
Figure 24-105

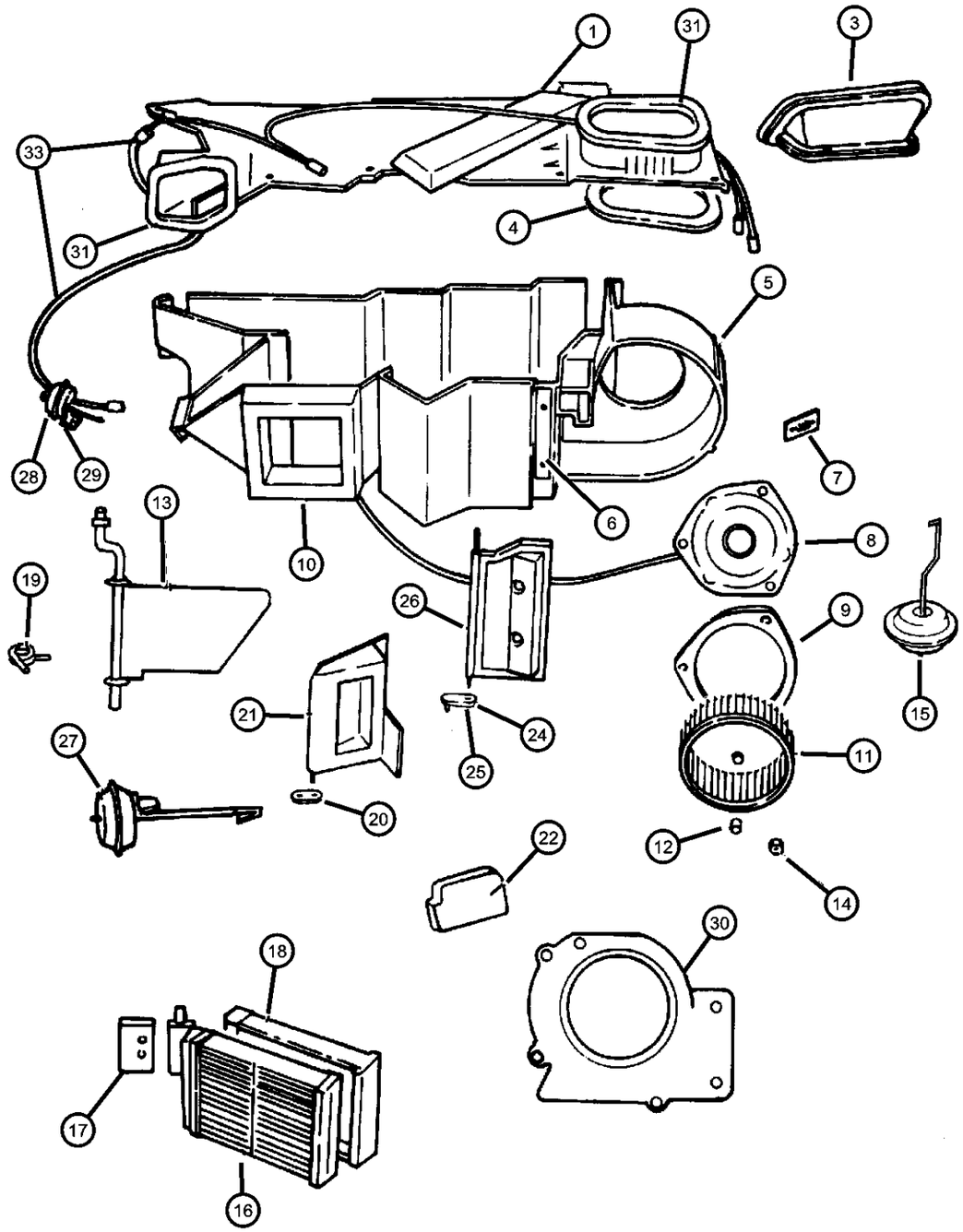

ITEM	PART NUMBER	QTY	LINE	SERIES	BODY	ENGINE	TRANS	TRIM	DESCRIPTION
31	03847606	1			31, 61, 84				SEAL, Heater Unit To Duct
-32	04644423	1							DOOR, Fresh Air
33	04734718AC	1							HARNESS, Vacuum
-34	05061038AA	1							SEAL, Recirculation Air Outlet
-35	05061042AA	1							SEAL, Recirculating Housing

DAKOTA (AN)

SERIES	LINE	BODY	ENGINE	TRANSMISSION
L = Quad Cab	1 = Dakota 2WD	31 = CLUB CAB 2-DR 6.5 FT BOX	EPO = 2.5L 4 Cyl.	DDC = TRANSMISSION - 5-SPEED HD MANUAL
L = Regular Cab	5 = Dakota 4WD	61 = REG CAB 6.5 FT BOX	EHO = 3.9L 6 Cyl.	DG4 = TRANSMISSION-MULTI-SPEED AUTO, 45RFE
L = Club Cab		84 = CREW CAB 4-DR W.B.1	EMO = 5.9L 8 Cyl.	DGK = TRANSMISSION - 4-SPD. AUTOMATIC,42RE
			EVO = 4.7L Magnum	DGT = TRANSMISSION - 4-SPD. AUTOMATIC,46RE
			EHC = 3.9L SMPI V6	DGO = AUTO. TRANS.
			EML = 5.9L V8 MPI Engine	
			EPE = 2.5L POWER TECH I-4 Cyl.	
			EVA = 4.7L V8 MPI	

Hevac Unit
Figure 24-110

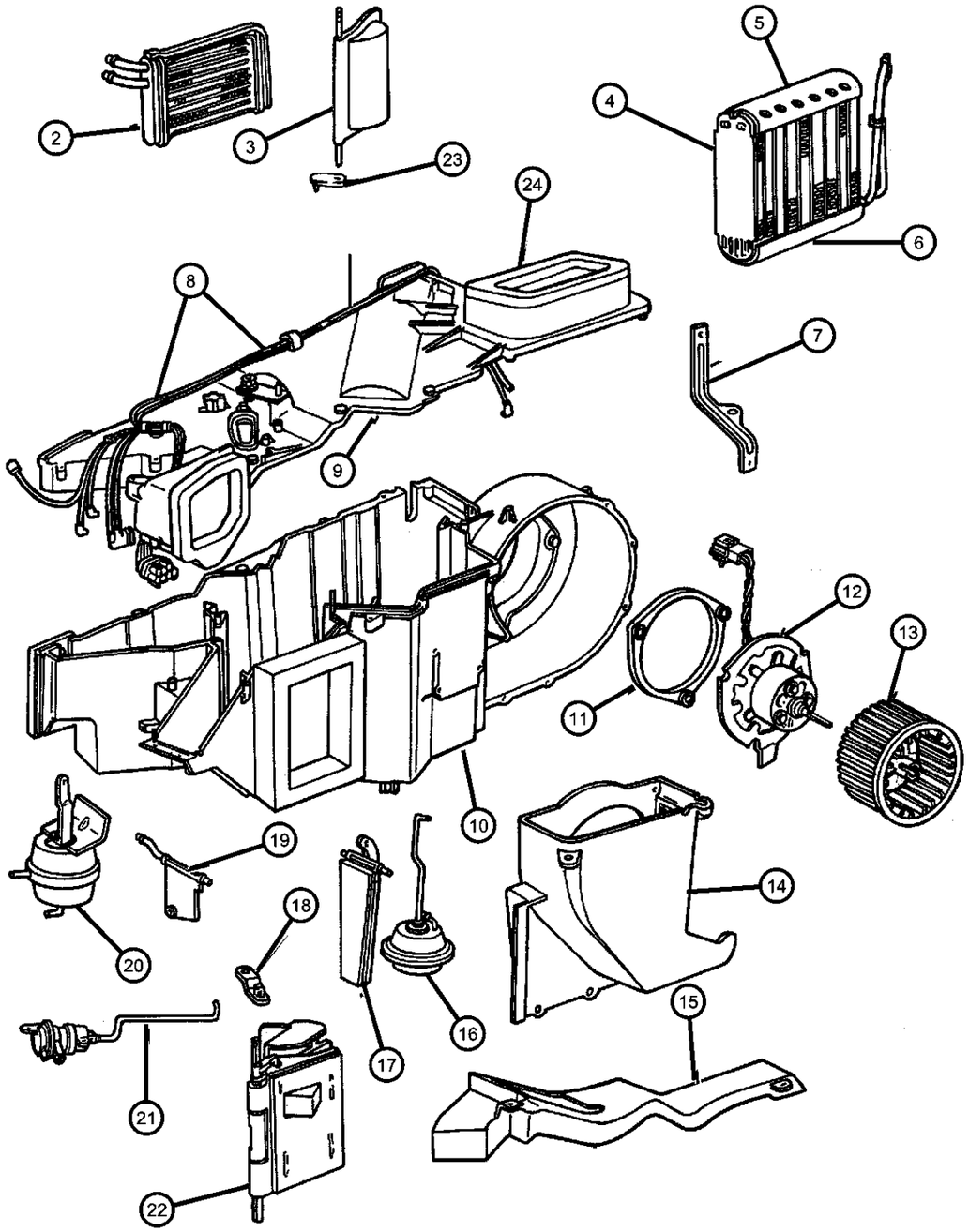

ITEM	PART NUMBER	QTY	LINE	SERIES	BODY	ENGINE	TRANS	TRIM	DESCRIPTION
-1	55056034AA	1			31, 61, 84				LABEL, Air Conditioning System
2	04644228AB	1							CORE, Heater
3	04734301AB	1							DOOR, Blend Air
4	04885441AA	1							EVAPORATOR, Air Conditioning
	V9900008								Mopar V-Line Alternative Part
	V9900006								Mopar V-Line Alternative Part
5	04644100	1							SEAL, Evaporator
6	04644099	2							SEAL, Evaporator
7	04644099	2							BRACKET, (NOT SERVICED)
8	04734718AC	1							HARNESS, Vacuum
9	04734712	1							COVER, Evaporator Housing
10	04734714AB	1							HOUSING AND STUD, Air Recirculating
11	03847476	1			31, 61, 84				SEAL, Blower Motor
12	05264068	1							MOTOR, Heater Blower
	R5264068								Mopar Remanufactured Part
13	04462674	1							BLOWER
14	04462690	1							HOUSING, Air Recirculating
15	04885393AB	1							DUCT, Air Outlet Distribution
16	05210111AB	1							ACTUATOR, Heater
17	04644423	1							DOOR, Fresh Air
18	03847858	1							LEVER, Mode Door
19	55055982AA	1							DOOR, Defroster
20	04734716	1			31, 61, 84				ACTUATOR, Heater
21	04462694	1							ACTUATOR, Heater
22	04462687	1			31, 61, 84				DOOR, Mode
23	04734719AB	1							LEVER, Blend Air Door
24	04462372	1							SEAL, Evaporator Housing
-25	55056041AB	1							RESISTOR, Blower Motor

DAKOTA (AN)

SERIES	LINE	BODY	ENGINE	TRANSMISSION
L = Quad Cab L = Regular Cab L = Club Cab	1 = Dakota 2WD 5 = Dakota 4WD	31 = CLUB CAB 2-DR 6.5 FT BOX 61 = REG CAB 6.5 FT BOX 84 = CREW CAB 4-DR W.B.1	EPO = 2.5L 4 Cyl. EHO = 3.9L 6 Cyl. EMO = 5.9L 8 Cyl. EVO = 4.7L Magnum EHC = 3.9L SMPI V6 EML = 5.9L V8 MPI Engine EPE = 2.5L POWER TECH I-4 Cyl. EVA = 4.7L V8 MPI	DDC = TRANSMISSION - 5-SPEED HD MANUAL DG4 = TRANSMISSION-MULTI-SPEED AUTO, 45RFE DGK = TRANSMISSION - 4-SPD. AUTOMATIC,42RE DGT = TRANSMISSION - 4-SPD. AUTOMATIC,46RE DGO = AUTO. TRANS.

AR = use ase required - = Non illustrrated part

<< RETURN TO GROUP INDEX

Plumbing, Heater And Air Conditioning
Figure 24-210

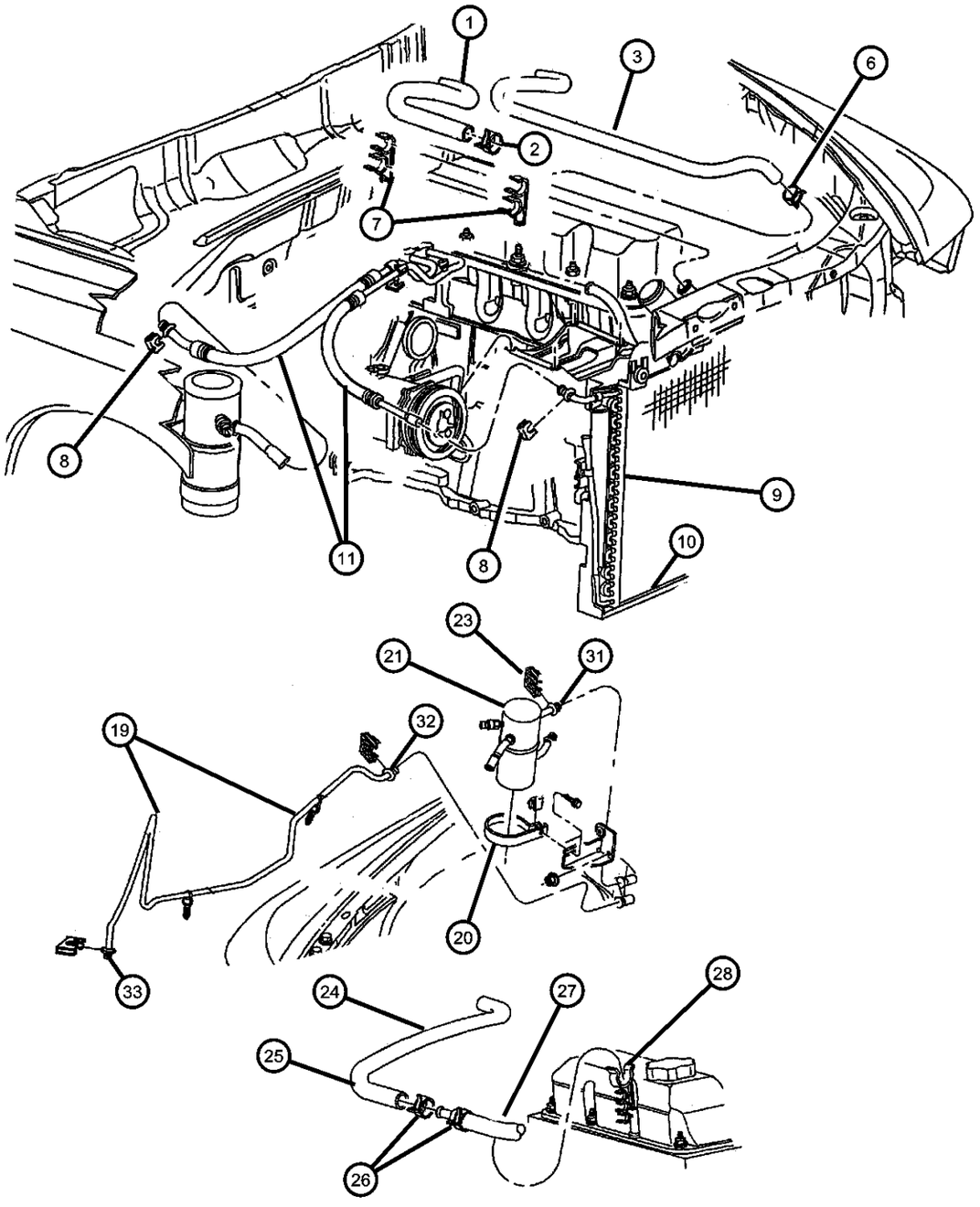

ITEM	PART NUMBER	QTY	LINE	SERIES	BODY	ENGINE	TRANS	TRIM	DESCRIPTION
Sales Codes:									
[EP0] = 2.5L Gas Engine									
[EH0] = 3.9L Gas Engine									
[EL0] = 5.2L Gas Engine									
[EM0] = 5.9L Gas Engine									
[EV0] = 4.7L Gas Engine									
1									HOSE, Heater Return
	55037628	1				EP0			
	55056044AA	1				EV0			
2									CLAMP, Heater Hose
	06502017	3				EP0			
		6				EH0, EM0, EV0			
3									HOSE, Heater Supply
	05015649AA	1			31, 61, 84	EV0			
	55037130AB	1			31, 61, 84	EH0			
	55037629	1				EP0			
	55057222AC	1				EM0			
-4	05015544AA	1			31, 61, 84	EV0			TUBE AND HOSE, Return
-5	05015543AA	1			31, 61, 84	EV0			TUBE AND HOSE, Supply
6									CLAMP, Hose, M28.9 x 1.60
	06502018	1				EH0, EM0, EP0			
		2				EV0			
7									BRACKET, Hose
	05015518AA	1			31, 61, 84	EV0			
	52028854AA	1				EP0			
	52028855AB	1				EH0, EM0			
8	04596152	1							CLIP, A/C Quick Disconnect
9									CONDENSER, Air Conditioning
	55055866AA	1				EH0, EM0, EV0			
		1				EH0			
10									ISOLATOR, Radiator
	05015421AA	2				EH0, EP0, EV0			Upper

DAKOTA (AN)

SERIES	LINE	BODY	ENGINE	TRANSMISSION
L = Quad Cab L = Regular Cab L = Club Cab	1 = Dakota 2WD 5 = Dakota 4WD	31 = CLUB CAB 2-DR 6.5 FT BOX 61 = REG CAB 6.5 FT BOX 84 = CREW CAB 4-DR W.B.1	EPO = 2.5L 4 Cyl. EHO = 3.9L 6 Cyl. EMO = 5.9L 8 Cyl. EVO = 4.7L Magnum EHC = 3.9L SMPI V6 EML = 5.9L V8 MPI Engine EPE = 2.5L POWER TECH I-4 Cyl. EVA = 4.7L V8 MPI	DDC = TRANSMISSION - 5-SPEED HD MANUAL DG4 = TRANSMISSION-MULTI-SPEED AUTO, 45RFE DGK = TRANSMISSION - 4-SPD. AUTOMATIC,42RE DGT = TRANSMISSION - 4-SPD. AUTOMATIC,46RE DGO = AUTO. TRANS.

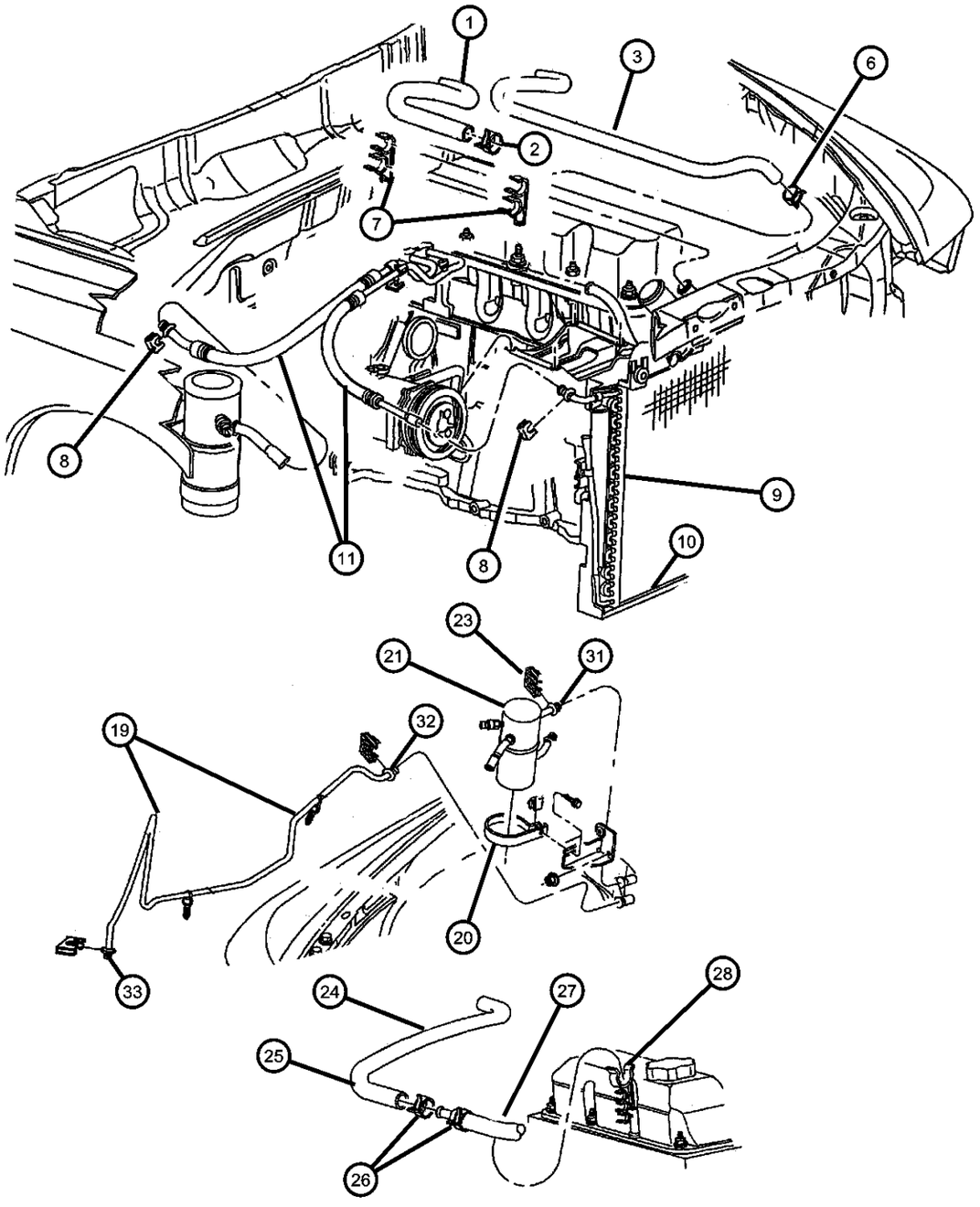

ITEM	PART NUMBER	QTY	LINE	SERIES	BODY	ENGINE	TRANS	TRIM	DESCRIPTION
		2				EM0, EV0			Upper
	05015422AA	1				EM0, EV0			Lower, Right
		1				EH0, EP0, EV0			Lower, Right
	05015423AA	1				EM0, EV0			Lower, Left
		1				EH0, EP0, EV0			Lower, Left
11									LINE, A/C Suction & Discharge
	55055884AC	1				EP0			
	55055885AC	1				EH0			
	55055886AC	1				EM0			
	55055922AC	1				EV0			
-12	04796667	1			31, 61, 84				O RING, A/C Suction Line
-13									SWITCH, A/C High Pressure Cut Off
	04897617AA	1				EP0			
		1				EH0			
		1				EM0			
		1				EV0			
-14									O RING, A/C Suction Line
	04761737	2				EP0			
		2				EH0			
		2				EM0			
		2				EV0			
-15		2							CLIP, A/C Liquid Line, (NOT SERVICED)
-16									CAP, A/C Check Valve
	04720748	1				EP0			
		1				EH0			
		1				EM0			
		1				EV0			
-17									O RING, High Pressure
	04741652	1				EP0			
		1				EH0			

DAKOTA (AN)

SERIES	LINE	BODY	ENGINE	TRANSMISSION
L = Quad Cab L = Regular Cab L = Club Cab	1 = Dakota 2WD 5 = Dakota 4WD	31 = CLUB CAB 2-DR 6.5 FT BOX 61 = REG CAB 6.5 FT BOX 84 = CREW CAB 4-DR W.B.1	EPO = 2.5L 4 Cyl. EHO = 3.9L 6 Cyl. EMO = 5.9L 8 Cyl. EVO = 4.7L Magnum EHC = 3.9L SMPI V6 EML = 5.9L V8 MPI Engine EPE = 2.5L POWER TECH I-4 Cyl. EVA = 4.7L V8 MPI	DDC = TRANSMISSION - 5-SPEED HD MANUAL DG4 = TRANSMISSION-MULTI-SPEED AUTO, 45RFE DGK = TRANSMISSION - 4-SPD. AUTOMATIC,42RE DGT = TRANSMISSION - 4-SPD. AUTOMATIC,46RE DGO = AUTO. TRANS.

Plumbing, Heater And Air Conditioning
Figure 24-210

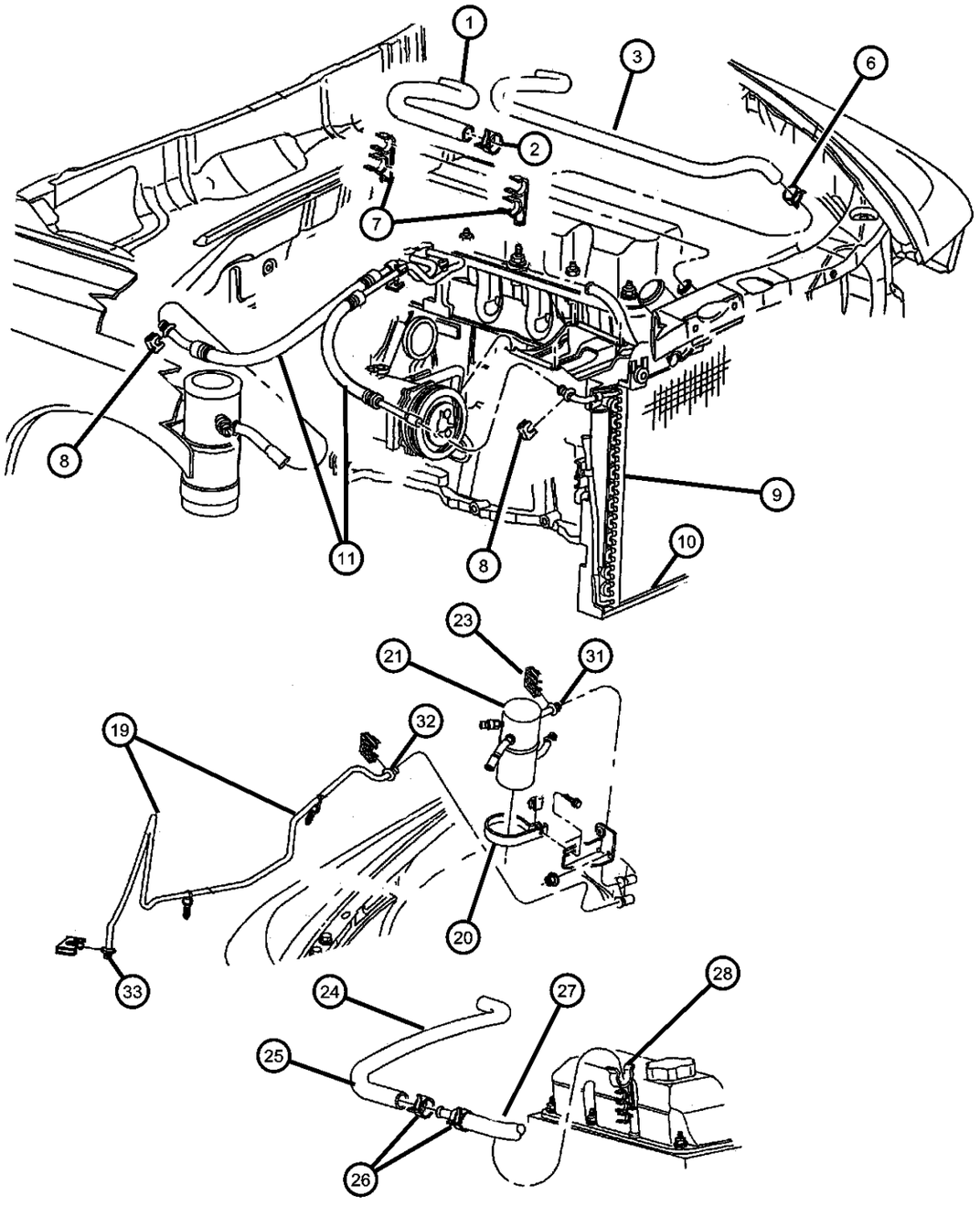

ITEM	PART NUMBER	QTY	LINE	SERIES	BODY	ENGINE	TRANS	TRIM	DESCRIPTION
		1				EM0			
		1				EV0			
-18	04723399	1			31, 61, 84				SPRING, Suction Line Coupling
19									LINE, A/C Liquid
	55055882AB	1			31, 61				
		1			84				
20	55036206AC	1							BAND, Accumulator Retaining
21	05015881AA	1			31, 61, 84				ACCUMULATOR, Suction Line
-22	05015883AA	1							TUBE, Accumulator Inlet
23	04596153	1							CLIP, A/C Quick Disconnect
24									HOSE, Heater Supply
	55037130AB	1				EH0			
	55037629	1				EP0			
	55057222AB	1				EM0			
	05015649AA	1			31, 61, 84	EV0			
25	55057223AB	1				EM0			HOSE AND SLEEVE, Thermostat To Core
26									CLAMP, Heater Hose
	06502017	3			31, 61, 84	EP0			
		6			31, 61, 84	EH0, EM0, EV0			
27	55036413AB	1				EH0, EM0			HOSE, Heater
28									CLIP, Heater Hose
	55036055	1				EP0			
		1				EH0, EM0			
-29									ORIFICE, Liquid Line
	04883839AA	1			31, 61				
		1			84				
-30	55056035AA	1			31, 61, 84				SWITCH, A/C Cycling, Low Pressure
31	04740401	2							O RING, A/C Suction Line, Green 5/8
32	04741705	3			31, 61, 84				O RING, A/C and Heater, Green
33	04796666	1			31, 61, 84				O RING, A/C Discharge Line, Black 1/2

DAKOTA (AN)

SERIES	LINE	BODY	ENGINE	TRANSMISSION
L = Quad Cab L = Regular Cab L = Club Cab	1 = Dakota 2WD 5 = Dakota 4WD	31 = CLUB CAB 2-DR 6.5 FT BOX 61 = REG CAB 6.5 FT BOX 84 = CREW CAB 4-DR W.B.1	EPO = 2.5L 4 Cyl. EHO = 3.9L 6 Cyl. EMO = 5.9L 8 Cyl. EVO = 4.7L Magnum EHC = 3.9L SMPI V6 EML = 5.9L V8 MPI Engine EPE = 2.5L POWER TECH I-4 Cyl. EVA = 4.7L V8 MPI	DDC = TRANSMISSION - 5-SPEED HD MANUAL DG4 = TRANSMISSION-MULTI-SPEED AUTO, 45RFE DGK = TRANSMISSION - 4-SPD. AUTOMATIC,42RE DGT = TRANSMISSION - 4-SPD. AUTOMATIC,46RE DGO = AUTO. TRANS.

AR = use ase required - = Non illustrrated part

Control, Heater
Figure 24-305

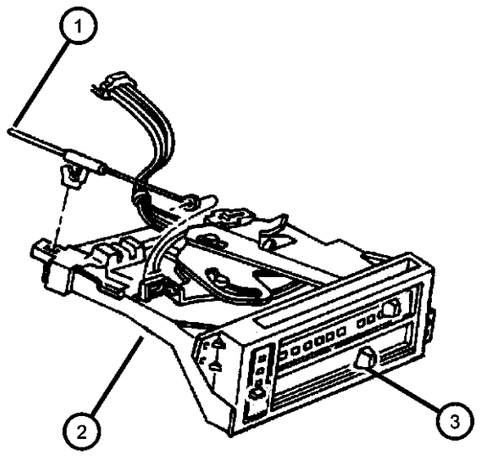

ITEM	PART NUMBER	QTY	LINE	SERIES	BODY	ENGINE	TRANS	TRIM	DESCRIPTION
1	55036573AE	1							CABLE, Temperature Control
2	55056875AA	1			31, 61, 84				CONTROL, Heater
3	04882860	3							KNOB, A/C And Heater Control - Rotary

DAKOTA (AN)

SERIES	LINE	BODY	ENGINE	TRANSMISSION
L = Quad Cab L = Regular Cab L = Club Cab	1 = Dakota 2WD 5 = Dakota 4WD	31 = CLUB CAB 2-DR 6.5 FT BOX 61 = REG CAB 6.5 FT BOX 84 = CREW CAB 4-DR W.B.1	EPO = 2.5L 4 Cyl. EHO = 3.9L 6 Cyl. EMO = 5.9L 8 Cyl. EVO = 4.7L Magnum EHC = 3.9L SMPI V6 EML = 5.9L V8 MPI Engine EPE = 2.5L POWER TECH I-4 Cyl. EVA = 4.7L V8 MPI	DDC = TRANSMISSION - 5-SPEED HD MANUAL DG4 = TRANSMISSION-MULTI-SPEED AUTO, 45RFE DGK = TRANSMISSION - 4-SPD. AUTOMATIC,42RE DGT = TRANSMISSION - 4-SPD. AUTOMATIC,46RE DGO = AUTO. TRANS.

Control, Air Conditioning
Figure 24-310

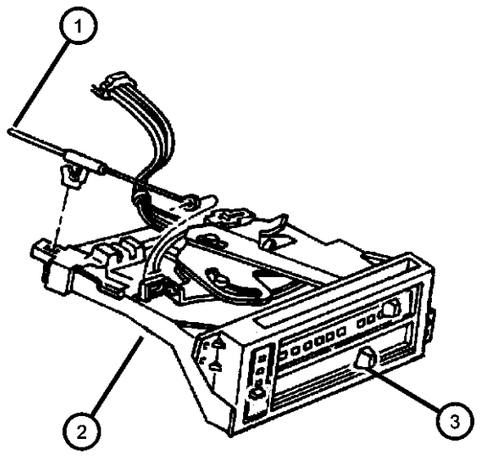

ITEM	PART NUMBER	QTY	LINE	SERIES	BODY	ENGINE	TRANS	TRIM	DESCRIPTION
1									CABLE, Temperature Control
	55036573AF	1			31, 61				
		1			84				
2	05015738AA	1			31, 61, 84				CONTROL, A/C And Heater
3	04882860	3							KNOB, A/C And Heater Control - Rotary
-4	05013679AB	1							HARNESS, A/C And Heater Vacuum

DAKOTA (AN)

SERIES	LINE	BODY	ENGINE	TRANSMISSION
L = Quad Cab L = Regular Cab L = Club Cab	1 = Dakota 2WD 5 = Dakota 4WD	31 = CLUB CAB 2-DR 6.5 FT BOX 61 = REG CAB 6.5 FT BOX 84 = CREW CAB 4-DR W.B.1	EPO = 2.5L 4 Cyl. EHO = 3.9L 6 Cyl. EMO = 5.9L 8 Cyl. EVO = 4.7L Magnum EHC = 3.9L SMPI V6 EML = 5.9L V8 MPI Engine EPE = 2.5L POWER TECH I-4 Cyl. EVA = 4.7L V8 MPI	DDC = TRANSMISSION - 5-SPEED HD MANUAL DG4 = TRANSMISSION-MULTI-SPEED AUTO, 45RFE DGK = TRANSMISSION - 4-SPD. AUTOMATIC,42RE DGT = TRANSMISSION - 4-SPD. AUTOMATIC,46RE DGO = AUTO. TRANS.

AR = use ase required - = Non illustrrated part

Compressor, A/c
Figure 24-405

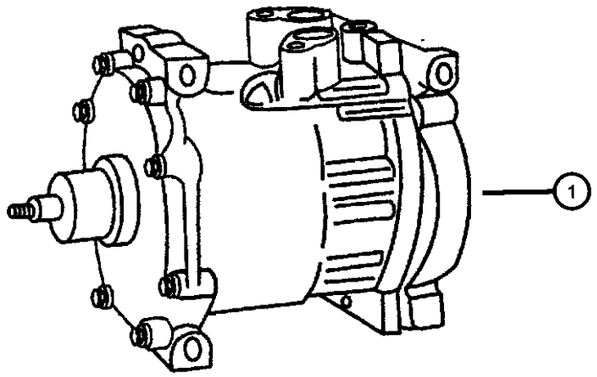

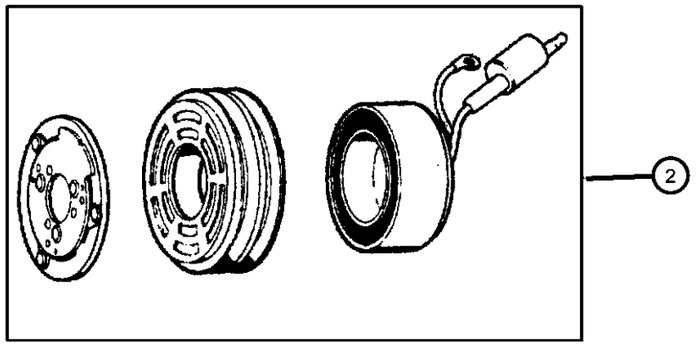

ITEM	PART NUMBER	QTY	LINE	SERIES	BODY	ENGINE	TRANS	TRIM	DESCRIPTION
Note: Sales Code EP0 = 2.5L Gas Engine									
Note: Sales Code EH0 = 3.9L Gas Engine									
Note: Sales Code EL0 = 5.2L Gas Engine									
Note: Sales Code EM0 = 5.9L Gas Engine									
1									COMPRESSOR, Air Conditioning
	55037205AG	1				EP0			
	55055517AB	1				EV0			
	55055540AE	1				EH0, EM0			
2									CLUTCH, A/C Compressor
	04882008	1				EH0, EM0			
	05015314AA	1				EP0			
	05016126AA	1				EV0			

DAKOTA (AN)

SERIES	LINE	BODY	ENGINE	TRANSMISSION
L = Quad Cab	1 = Dakota 2WD	31 = CLUB CAB 2-DR 6.5 FT BOX	EPO = 2.5L 4 Cyl.	DDC = TRANSMISSION - 5-SPEED HD MANUAL
L = Regular Cab	5 = Dakota 4WD	61 = REG CAB 6.5 FT BOX	EHO = 3.9L 6 Cyl.	DG4 = TRANSMISSION-MULTI-SPEED AUTO, 45RFE
L = Club Cab		84 = CREW CAB 4-DR W.B.1	EMO = 5.9L 8 Cyl.	DGK = TRANSMISSION - 4-SPD. AUTOMATIC,42RE
			EVO = 4.7L Magnum	DGT = TRANSMISSION - 4-SPD. AUTOMATIC,46RE
			EHC = 3.9L SMPI V6	DGO = AUTO. TRANS.
			EML = 5.9L V8 MPI Engine	
			EPE = 2.5L POWER TECH I-4 Cyl.	
			EVA = 4.7L V8 MPI	

Mounting, Compressor 2.5L Engine
Figure 24-505

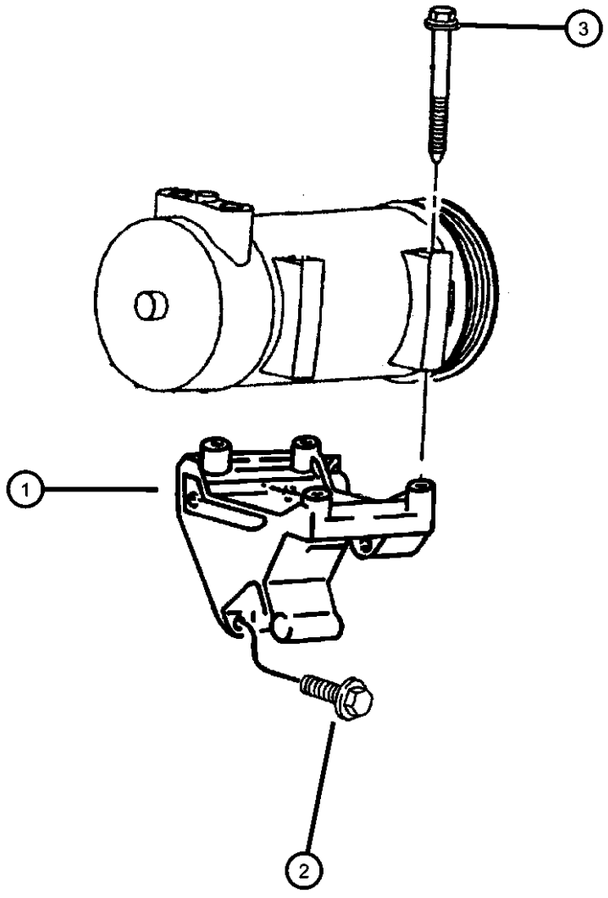

ITEM	PART NUMBER	QTY	LINE	SERIES	BODY	ENGINE	TRANS	TRIM	DESCRIPTION
Note: Sales Code EP0 = 2.5L Gas Engine									
1	53010207	1				EP0			BRACKET, Alternator And Compressor
2	06025063	3				EP0			SCREW AND WASHER, .375-16x1.125
3	06025063	3							BOLT, M8x1.25x90, (NOT SERVICED)

DAKOTA (AN)

SERIES	LINE	BODY	ENGINE	TRANSMISSION
L = Quad Cab	1 = Dakota 2WD	31 = CLUB CAB 2-DR 6.5 FT BOX	EPO = 2.5L 4 Cyl.	DDC = TRANSMISSION - 5-SPEED HD MANUAL
L = Regular Cab	5 = Dakota 4WD	61 = REG CAB 6.5 FT BOX	EHO = 3.9L 6 Cyl.	DG4 = TRANSMISSION-MULTI-SPEED AUTO, 45RFE
L = Club Cab		84 = CREW CAB 4-DR W.B.1	EMO = 5.9L 8 Cyl.	DGK = TRANSMISSION - 4-SPD. AUTOMATIC,42RE
			EVO = 4.7L Magnum	DGT = TRANSMISSION - 4-SPD. AUTOMATIC,46RE
			EHC = 3.9L SMPI V6	DGO = AUTO. TRANS.
			EML = 5.9L V8 MPI Engine	
			EPE = 2.5L POWER TECH I-4 Cyl.	
			EVA = 4.7L V8 MPI	

Mounting, Compressor 3.9L, 5.9L Engine
Figure 24-507

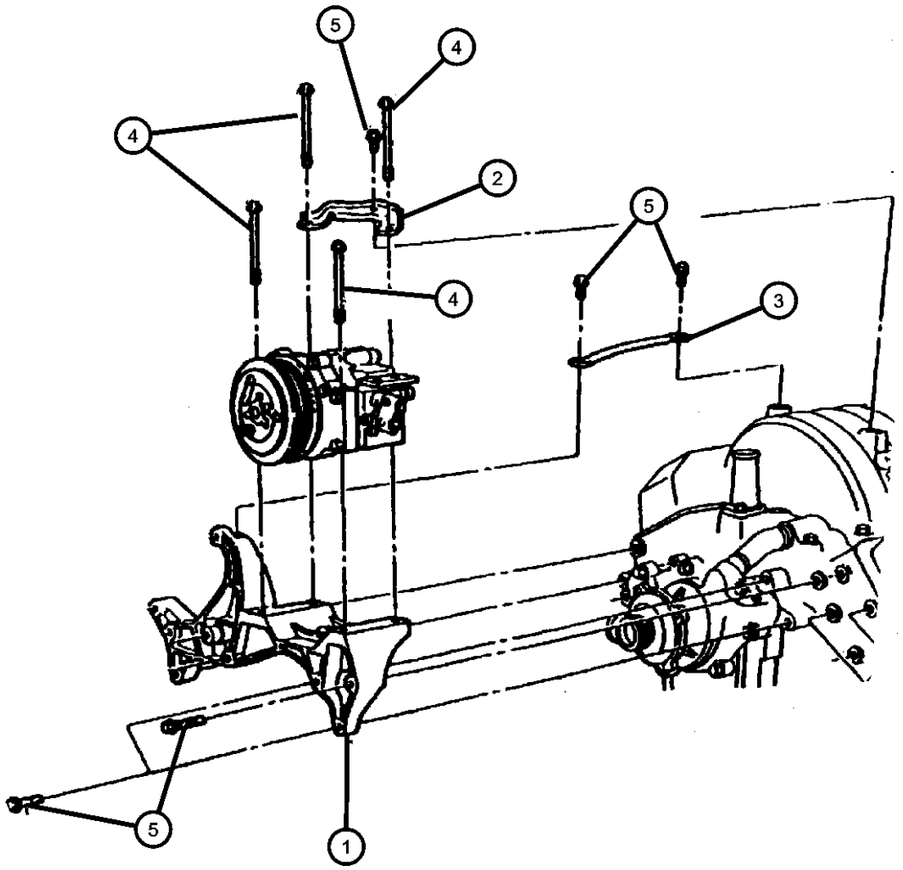

ITEM	PART NUMBER	QTY	LINE	SERIES	BODY	ENGINE	TRANS	TRIM	DESCRIPTION
Note: Sales Code EH0 = 3.9L Gas Engine									
Note: Sales Code EL0 = 5.2L Gas Engine									
Note: Sales Code EM0 = 5.9L Gas Engine									
1	53008614	1				EH0, EM0			BRACKET, Alternator And Compressor
2	53010252	1				EH0, EM0			BRACE, A/C Compressor
3	53008746	1				EH0, EM0			BRACE, Alternator
4	06034789	4				EH0, EM0			SCREW AND WASHER, Hex Head Coned Lock Washe, .312-18x3.75
5	06034789	4							BOLT, (NOT SERVICED)

DAKOTA (AN)

SERIES	LINE	BODY	ENGINE	TRANSMISSION
L = Quad Cab	1 = Dakota 2WD	31 = CLUB CAB 2-DR 6.5 FT BOX	EPO = 2.5L 4 Cyl.	DDC = TRANSMISSION - 5-SPEED HD MANUAL
L = Regular Cab	5 = Dakota 4WD	61 = REG CAB 6.5 FT BOX	EHO = 3.9L 6 Cyl.	DG4 = TRANSMISSION-MULTI-SPEED AUTO, 45RFE
L = Club Cab		84 = CREW CAB 4-DR W.B.1	EMO = 5.9L 8 Cyl.	DGK = TRANSMISSION - 4-SPD. AUTOMATIC,42RE
			EVO = 4.7L Magnum	DGT = TRANSMISSION - 4-SPD. AUTOMATIC,46RE
			EHC = 3.9L SMPI V6	DGO = AUTO. TRANS.
			EML = 5.9L V8 MPI Engine	
			EPE = 2.5L POWER TECH I-4 Cyl.	
			EVA = 4.7L V8 MPI	

Compressor, Air Conditioning 4.7L Engine
Figure 24-510

ITEM	PART NUMBER	QTY	LINE	SERIES	BODY	ENGINE	TRANS	TRIM	DESCRIPTION
1	55055517AB	1				EV0			COMPRESSOR, Air Conditioning
2	05016126AA	1				EV0			CLUTCH, A/C Compressor
3	05016126AA	1							SCREW, (NOT SERVICED)

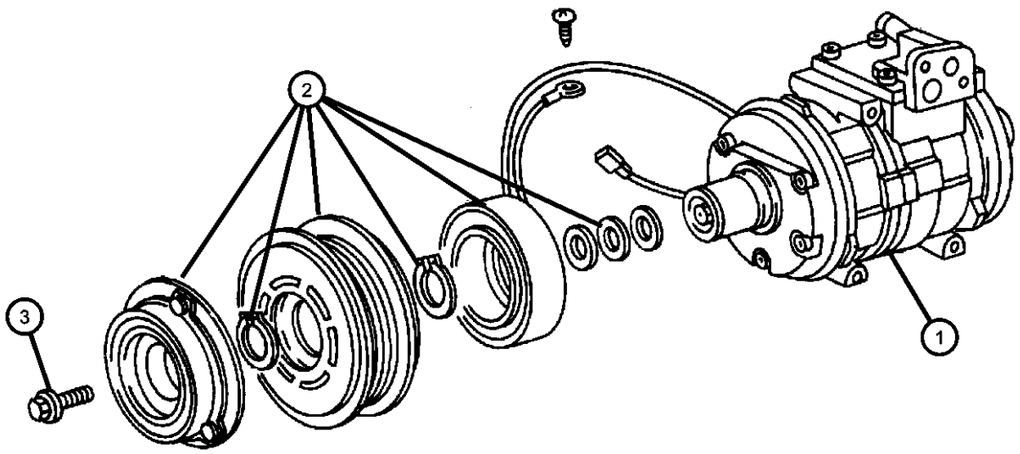

DAKOTA (AN)

SERIES	LINE	BODY	ENGINE	TRANSMISSION
L = Quad Cab L = Regular Cab L = Club Cab	1 = Dakota 2WD 5 = Dakota 4WD	31 = CLUB CAB 2-DR 6.5 FT BOX 61 = REG CAB 6.5 FT BOX 84 = CREW CAB 4-DR W.B.1	EPO = 2.5L 4 Cyl. EHO = 3.9L 6 Cyl. EMO = 5.9L 8 Cyl. EVO = 4.7L Magnum EHC = 3.9L SMPI V6 EML = 5.9L V8 MPI Engine EPE = 2.5L POWER TECH I-4 Cyl. EVA = 4.7L V8 MPI	DDC = TRANSMISSION - 5-SPEED HD MANUAL DG4 = TRANSMISSION-MULTI-SPEED AUTO, 45RFE DGK = TRANSMISSION - 4-SPD. AUTOMATIC,42RE DGT = TRANSMISSION - 4-SPD. AUTOMATIC,46RE DGO = AUTO. TRANS.

Mounting, Compressor 4.7L Engine
Figure 24-520

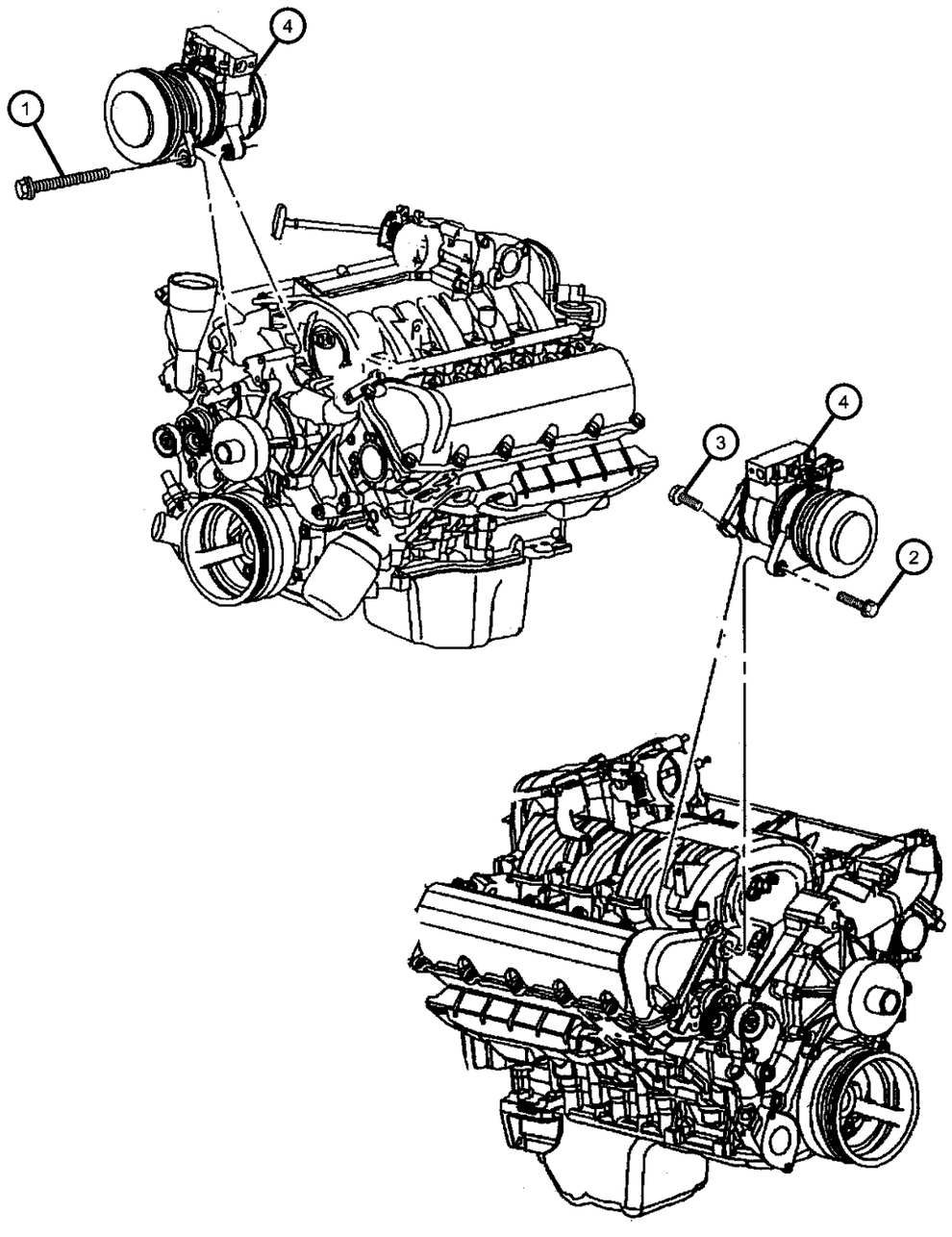

ITEM	PART NUMBER	QTY	LINE	SERIES	BODY	ENGINE	TRANS	TRIM	DESCRIPTION
Note: Sales Code EV0 = 4.7 L Engine									
1	06504344	1				EV0			SCREW AND WASHER, Hex Head
2	06101985	5				EV0			SCREW AND WASHER, M10x1.50x45.00
3	06102047AA	6				EV0			SCREW, Hex Head, M8x1.25x50
4	55055517AB	1				EV0			COMPRESSOR, Air Conditioning

DAKOTA (AN)

SERIES	LINE	BODY	ENGINE	TRANSMISSION
L = Quad Cab	1 = Dakota 2WD	31 = CLUB CAB 2-DR 6.5 FT BOX	EPO = 2.5L 4 Cyl.	DDC = TRANSMISSION - 5-SPEED HD MANUAL
L = Regular Cab	5 = Dakota 4WD	61 = REG CAB 6.5 FT BOX	EHO = 3.9L 6 Cyl.	DG4 = TRANSMISSION-MULTI-SPEED AUTO, 45RFE
L = Club Cab		84 = CREW CAB 4-DR W.B.1	EMO = 5.9L 8 Cyl.	DGK = TRANSMISSION - 4-SPD. AUTOMATIC,42RE
			EVO = 4.7L Magnum	DGT = TRANSMISSION - 4-SPD. AUTOMATIC,46RE
			EHC = 3.9L SMPI V6	DGO = AUTO. TRANS.
			EML = 5.9L V8 MPI Engine	
			EPE = 2.5L POWER TECH I-4 Cyl.	
			EVA = 4.7L V8 MPI	

Demister System
Figure 24-605

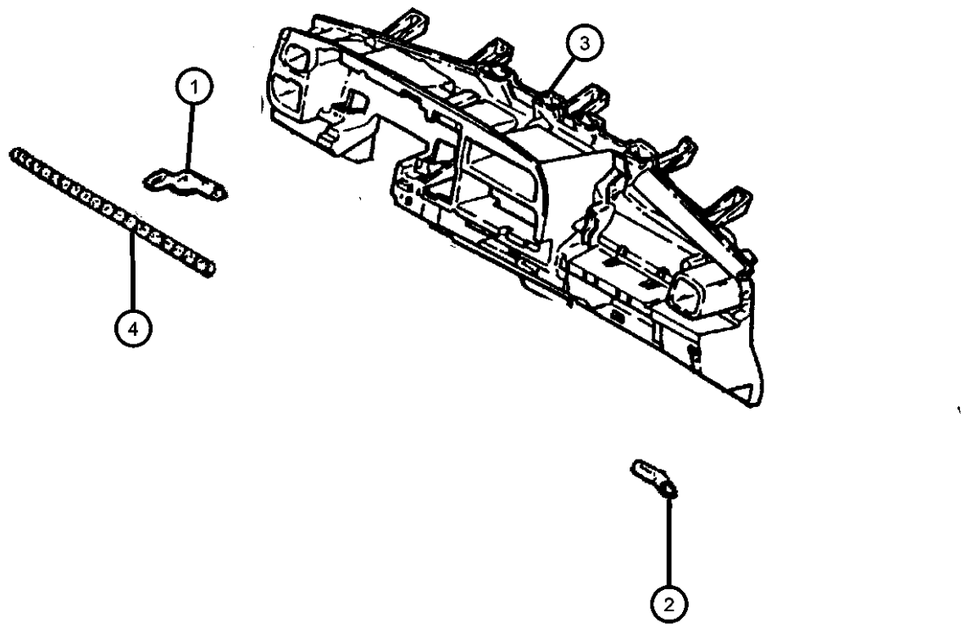

ITEM	PART NUMBER	QTY	LINE	SERIES	BODY	ENGINE	TRANS	TRIM	DESCRIPTION
1	55055485	1							DUCT, Demister
2	55055484	1							DUCT, Demister
3	55055475	1							DUCT, Demister
4	55055543	1							HOSE, Demister

DAKOTA (AN)

SERIES	LINE	BODY	ENGINE	TRANSMISSION
L = Quad Cab L = Regular Cab L = Club Cab	1 = Dakota 2WD 5 = Dakota 4WD	31 = CLUB CAB 2-DR 6.5 FT BOX 61 = REG CAB 6.5 FT BOX 84 = CREW CAB 4-DR W.B.1	EPO = 2.5L 4 Cyl. EHO = 3.9L 6 Cyl. EMO = 5.9L 8 Cyl. EVO = 4.7L Magnum EHC = 3.9L SMPI V6 EML = 5.9L V8 MPI Engine EPE = 2.5L POWER TECH I-4 Cyl. EVA = 4.7L V8 MPI	DDC = TRANSMISSION - 5-SPEED HD MANUAL DG4 = TRANSMISSION-MULTI-SPEED AUTO, 45RFE DGK = TRANSMISSION - 4-SPD. AUTOMATIC,42RE DGT = TRANSMISSION - 4-SPD. AUTOMATIC,46RE DGO = AUTO. TRANS.

Group - 25

Emission Systems

025-100
Emission Labels

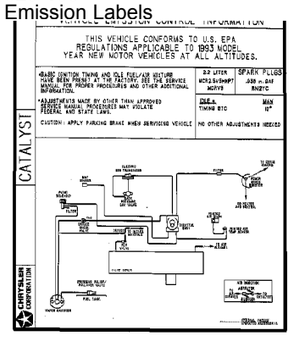

025-300
Vacuum Canister

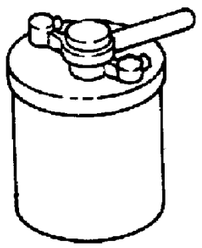

025-400
Emission Harness

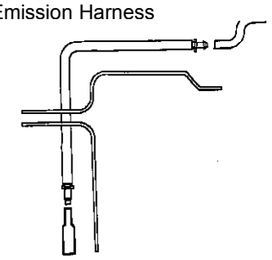

Group - 25 Emission Systems

Illustration Title — Group-Fig. No.

Emission Labels
Emission Labels ..... Fig. 25 - 110

Vacuum Canister
Vacuum Canister ..... Fig. 25 - 310

Emission Harness
Emission Control Vacuum Harness ..... Fig. 25 - 410
Emission Control Vacuum Harness ..... Fig. 25 - 420
Leak Detection Pump ..... Fig. 25 - 430

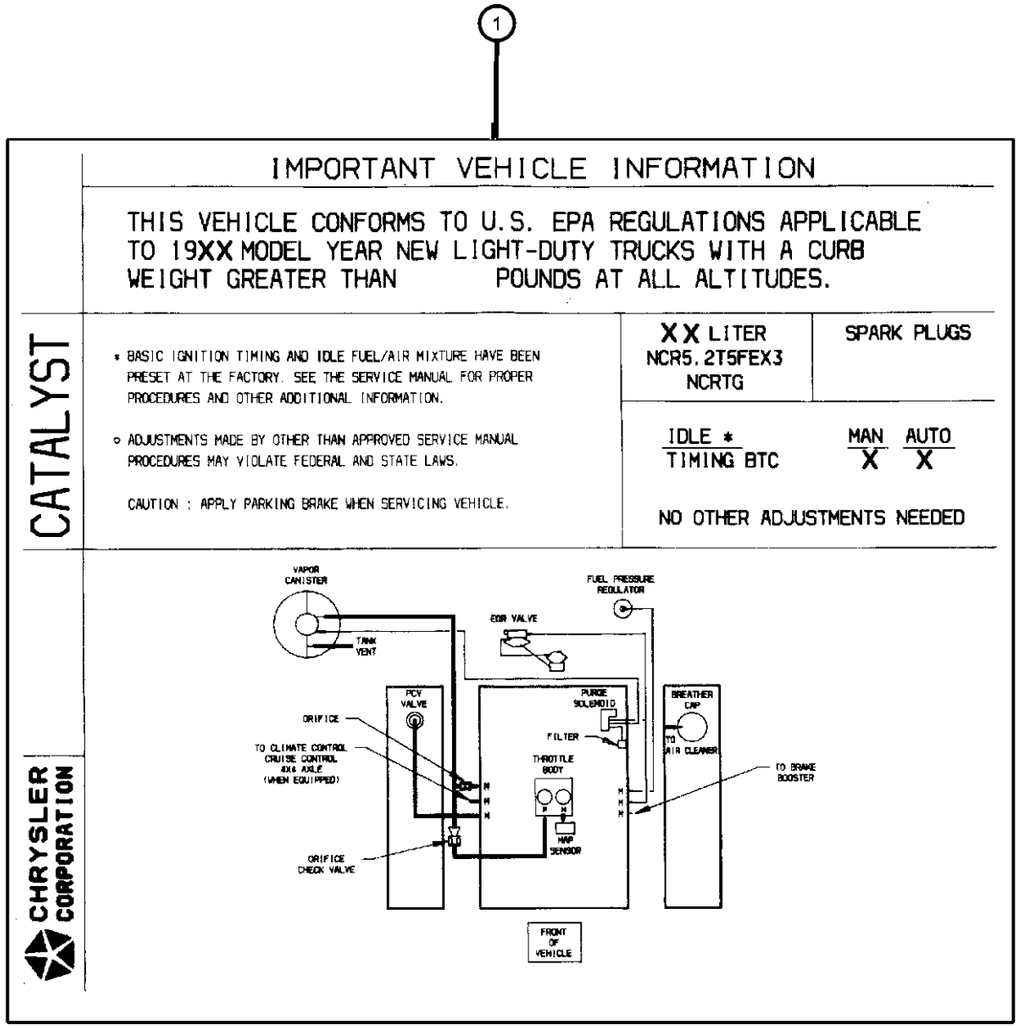

ITEM	PART NUMBER	QTY	LINE	SERIES	BODY	ENGINE	TRANS	TRIM	DESCRIPTION

Note; Sales Codes
[DHC]= Full Time Transfer Case
[DHK]= Shift On The Fly 231 Heavy Duty Transfer Case
[EH0]= All 3.9L V-6 Gas Engines
[EM0]= All 5.9L V-8 Gas Engines
[EPE]= Magnum 2.5L, Inline 4 Cylinder
[EV0]= All 4.7L V-8 Gas Engines

1									LABEL, Emission
	53032333AA	1				EPE			Federal, Export
	53032334AA	1				EPE			Canada
	53032335AA	1				EPE			California
		1				EPE			Northeastern States
	53032337AA	1				EH0			Federal, Export
	53032338AA	1				EH0			Canada
	53032340AA	1	5			EV0			Federal, Export, [DHK] Transfer Case
		1	1			EV0			Federal, Export
	53032341AA	1	5			EV0			Federal, Export, [DHC] Transfer Case
	53032343AA	1	5			EV0			Canada, [DHK] Transfer Case
		1	1			EV0			Canada
	53032344AA	1	5			EV0			Canada, [DHC] Transfer Case
	53032345AA	1				EV0			California
		1				EV0			Northeastern States
	53032347AA	1	1			EM0			Federal, Export
	53032348AA	1	1			EM0			Canada
	53032350AA	1	5			EM0			Federal, Export, [DHC] Transfer Case
	53032351AA	1	5			EM0			Canada, [DHC] Transfer Case
	53032352AA	1	1			EM0			California
		1	1			EM0			Northeastern States
	53032354AA	1	5			EM0			California
		1	5			EM0			Northeastern States
	53032370AA	1	5			EM0			Federal, Export, [DHK] Transfer Case
	53032371AA	1	5			EM0			Canada, [DHK] Transfer Case

DAKOTA (AN)

SERIES	LINE	BODY	ENGINE	TRANSMISSION
L = Quad Cab L = Regular Cab L = Club Cab	1 = Dakota 2WD 5 = Dakota 4WD	31 = CLUB CAB 2-DR 6.5 FT BOX 61 = REG CAB 6.5 FT BOX 84 = CREW CAB 4-DR W.B.1	EPO = 2.5L 4 Cyl. EHO = 3.9L 6 Cyl. EMO = 5.9L 8 Cyl. EVO = 4.7L Magnum EHC = 3.9L SMPI V6 EML = 5.9L V8 MPI Engine EPE = 2.5L POWER TECH I-4 Cyl. EVA = 4.7L V8 MPI	DDC = TRANSMISSION - 5-SPEED HD MANUAL DG4 = TRANSMISSION-MULTI-SPEED AUTO, 45RFE DGK = TRANSMISSION - 4-SPD. AUTOMATIC,42RE DGT = TRANSMISSION - 4-SPD. AUTOMATIC,46RE DGO = AUTO. TRANS.

Vacuum Canister
Figure 25-310

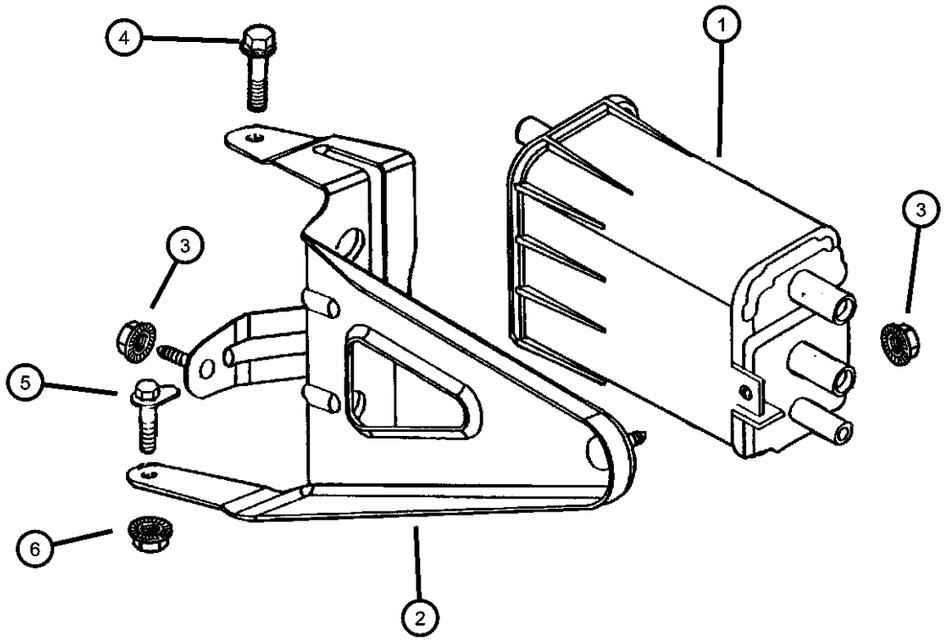

ITEM	PART NUMBER	QTY	LINE	SERIES	BODY	ENGINE	TRANS	TRIM	DESCRIPTION
1	53030838	1							CANISTER, Vapor
2	53032104AA	1							BRACKET, Vapor Canister
3	06101467	2							NUT, Hex Flange, M8x1.25
4	06101467	2							SCREW, Hex Flange Head, M8x1.25x25.00, (NOT SERVICED)
5	06504781	1							BOLT, M10x1.50x35
6	06502979	1							NUT AND WASHER, Hex, M10x1.5

DAKOTA (AN)

SERIES	LINE	BODY	ENGINE	TRANSMISSION
L = Quad Cab L = Regular Cab L = Club Cab	1 = Dakota 2WD 5 = Dakota 4WD	31 = CLUB CAB 2-DR 6.5 FT BOX 61 = REG CAB 6.5 FT BOX 84 = CREW CAB 4-DR W.B.1	EPO = 2.5L 4 Cyl. EHO = 3.9L 6 Cyl. EMO = 5.9L 8 Cyl. EVO = 4.7L Magnum EHC = 3.9L SMPI V6 EML = 5.9L V8 MPI Engine EPE = 2.5L POWER TECH I-4 Cyl. EVA = 4.7L V8 MPI	DDC = TRANSMISSION - 5-SPEED HD MANUAL DG4 = TRANSMISSION-MULTI-SPEED AUTO, 45RFE DGK = TRANSMISSION - 4-SPD. AUTOMATIC,42RE DGT = TRANSMISSION - 4-SPD. AUTOMATIC,46RE DGO = AUTO. TRANS.

Emission Control Vacuum Harness
Figure 25-410

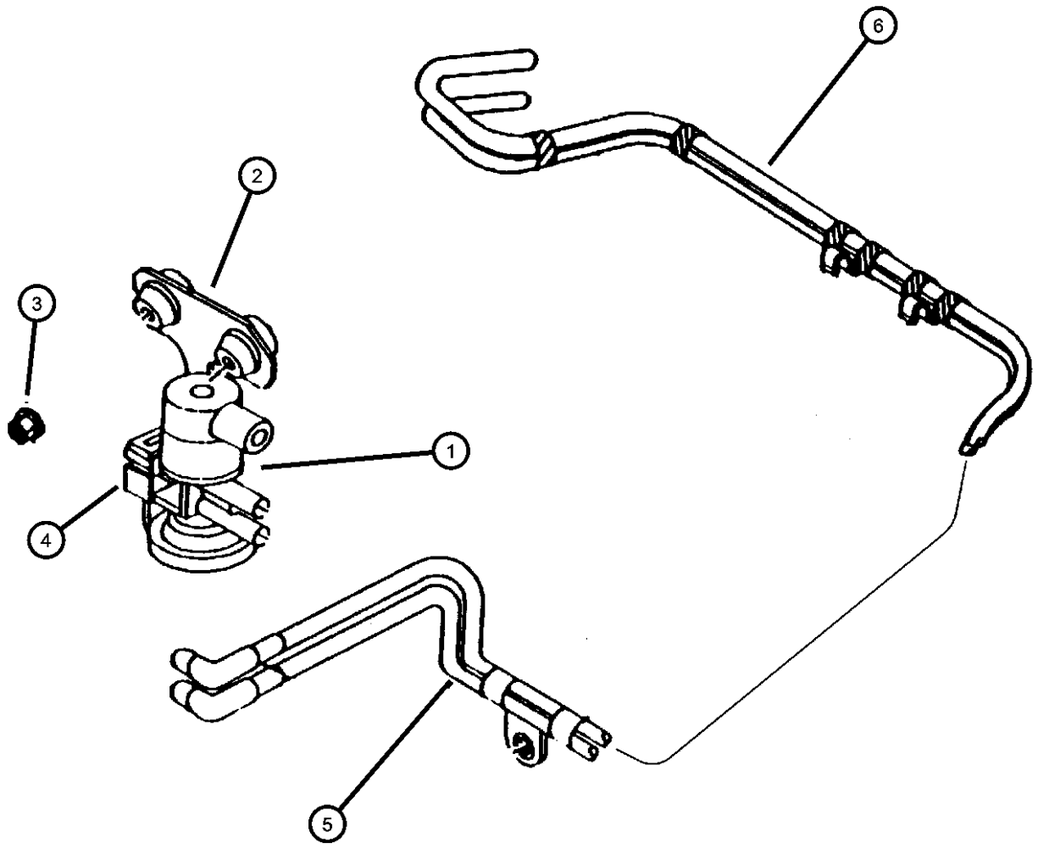

ITEM	PART NUMBER	QTY	LINE	SERIES	BODY	ENGINE	TRANS	TRIM	DESCRIPTION
Note; Sales Codes									
[EP0]= All 2.5L, 4 Cylinder Gas Engines									
1	04669475AB	1				EP0			SOLENOID, Duty Cycle Purge
2	53032040AA	1				EP0			BRACKET, Vacuum Solenoid
3	06503102	1				EP0			NUT AND WASHER, Hex Nut-Coned Washer, M6 x 1.00
4	05003974AA	1				EP0			BRACKET PACKAGE, DCP
5	53031127	1				EP0			HARNESS, Canister Purge
6									HARNESS, Canister Purge
	53032199AA	1				EP0			Federal, Leaded Gas
	53032200AA	1				EP0			California

DAKOTA (AN)

SERIES	LINE	BODY	ENGINE	TRANSMISSION
L = Quad Cab L = Regular Cab L = Club Cab	1 = Dakota 2WD 5 = Dakota 4WD	31 = CLUB CAB 2-DR 6.5 FT BOX 61 = REG CAB 6.5 FT BOX 84 = CREW CAB 4-DR W.B.1	EPO = 2.5L 4 Cyl. EHO = 3.9L 6 Cyl. EMO = 5.9L 8 Cyl. EVO = 4.7L Magnum EHC = 3.9L SMPI V6 EML = 5.9L V8 MPI Engine EPE = 2.5L POWER TECH I-4 Cyl. EVA = 4.7L V8 MPI	DDC = TRANSMISSION - 5-SPEED HD MANUAL DG4 = TRANSMISSION-MULTI-SPEED AUTO, 45RFE DGK = TRANSMISSION - 4-SPD. AUTOMATIC,42RE DGT = TRANSMISSION - 4-SPD. AUTOMATIC,46RE DGO = AUTO. TRANS.

Emission Control Vacuum Harness
Figure 25-420

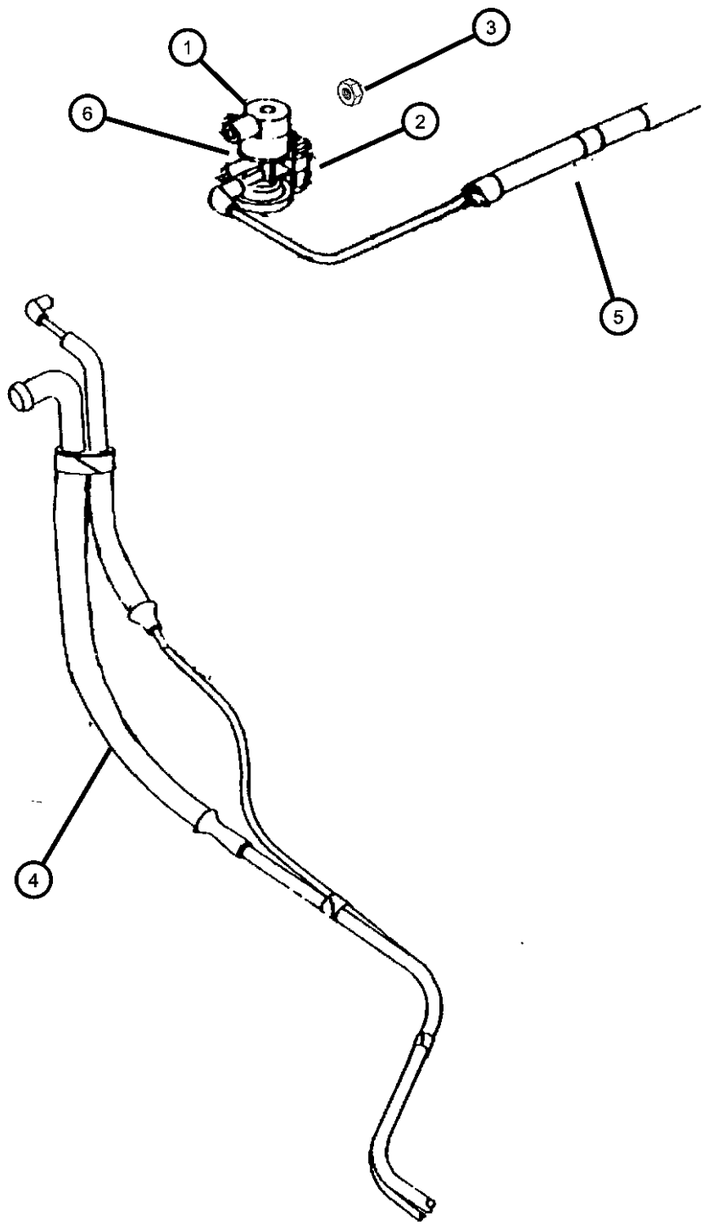

ITEM	PART NUMBER	QTY	LINE	SERIES	BODY	ENGINE	TRANS	TRIM	DESCRIPTION
Note; Sales Codes [EH0]= All 3.9L V-6 Gas Engines [EM0]= All 5.9L V-8 Gas Engines [EP0]= All 2.5L, 4 Cylinder Gas Engines [EV0]= All 4.7L V-8 Gas Engines									
1									SOLENOID, Duty Cycle Purge
	04669475AB	1				EM0			
		1				EH0			
		1				EV0			
2	53032042AA	1				EH0, EM0, EV0			BRACKET, Vacuum Solenoid
3	06033560	1			31, 61, 84				NUT AND WASHER, Hex Nut-Coned Washer, .25-20
4									HARNESS, Canister Purge
	53031128	1				EM0			California
		1				EH0, EV0			
	53032206	1				EM0			Federal, Leaded Fuel
5									HARNESS, Vacuum
	53031762AA	1				EV0			[Duty cycle purge solenoid service with harness]
	53032256AA	1				EM0, EP0			[California..Duty cycle purge solenoid service with harness]
		1				EH0			[Duty cycle purge solenoid service service with harness]
	53032257AA	1				EM0			[Federal, Leaded Fuel... Duty cycle purge solenoid service with harness]
6									BRACKET PACKAGE, DCP
	05003974AA	1				EH0			
		1				EM0			
-7	04591090	1				EM0			PORT, Emission Testing

DAKOTA (AN)

SERIES	LINE	BODY	ENGINE	TRANSMISSION
L = Quad Cab L = Regular Cab L = Club Cab	1 = Dakota 2WD 5 = Dakota 4WD	31 = CLUB CAB 2-DR 6.5 FT BOX 61 = REG CAB 6.5 FT BOX 84 = CREW CAB 4-DR W.B.1	EPO = 2.5L 4 Cyl. EHO = 3.9L 6 Cyl. EMO = 5.9L 8 Cyl. EVO = 4.7L Magnum EHC = 3.9L SMPI V6 EML = 5.9L V8 MPI Engine EPE = 2.5L POWER TECH I-4 Cyl. EVA = 4.7L V8 MPI	DDC = TRANSMISSION - 5-SPEED HD MANUAL DG4 = TRANSMISSION-MULTI-SPEED AUTO, 45RFE DGK = TRANSMISSION - 4-SPD. AUTOMATIC,42RE DGT = TRANSMISSION - 4-SPD. AUTOMATIC,46RE DGO = AUTO. TRANS.

Leak Detection Pump
Figure 25-430

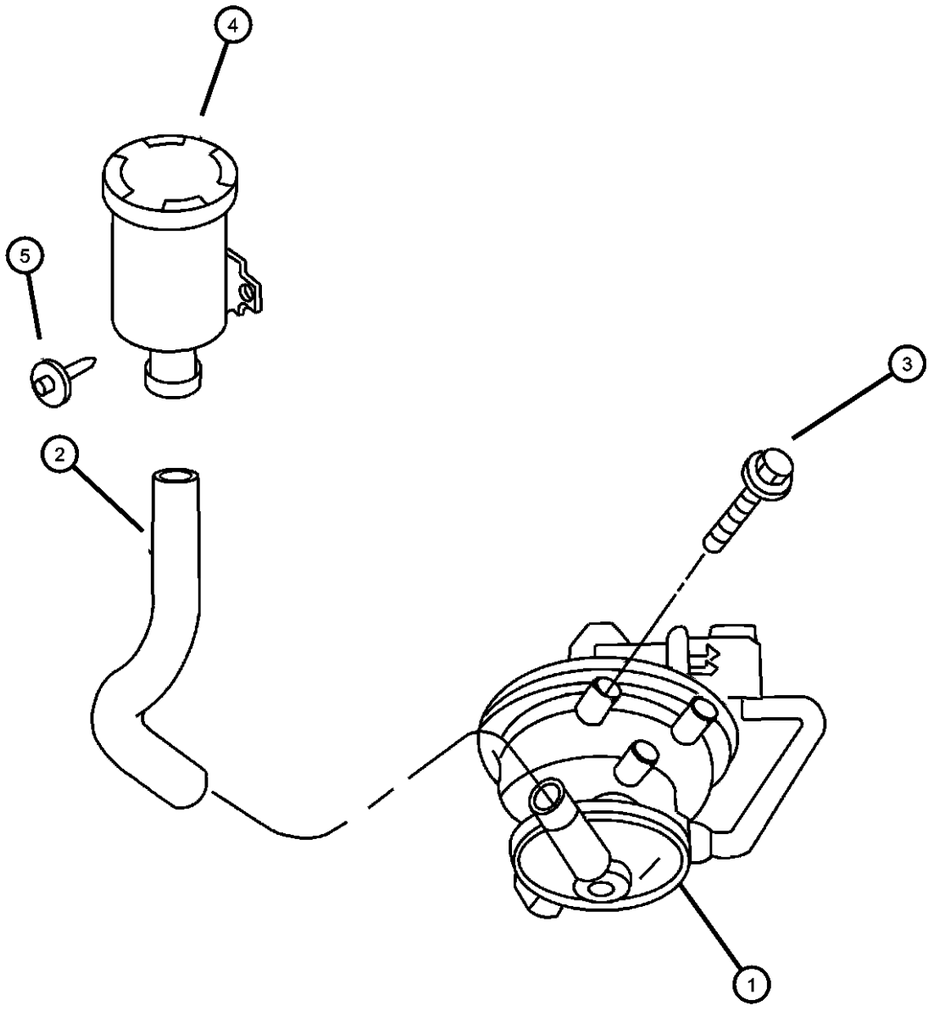

ITEM	PART NUMBER	QTY	LINE	SERIES	BODY	ENGINE	TRANS	TRIM	DESCRIPTION
Note; Sales Codes [EH0]= All 3.9L V-6 Gas Engines [EM0]= All 5.9L V-8 Gas Engines [EP0]= All 2.5L, 4 Cylinder Gas Engines [EV0]= All 4.7L V-8 Gas Engines									
1	04891422AB	1				EH0, EV0			PUMP, Leak Detection
2									HOSE, Leak Detection Pump
	53030897	1				EH0, EV0			
		1				EM0, EP0			
3		1							SCREW, Pan Head, M4.8x1.59x13.00, (NOT SERVICED)
4									FILTER, Fuel Vapor Vent
	04612901	1				EM0, EP0			
		1				EH0, EV0			
5									FASTENER
	06502481	1				EH0, EV0			
		1				EM0, EP0			

DAKOTA (AN)

SERIES	LINE	BODY	ENGINE	TRANSMISSION
L = Quad Cab L = Regular Cab L = Club Cab	1 = Dakota 2WD 5 = Dakota 4WD	31 = CLUB CAB 2-DR 6.5 FT BOX 61 = REG CAB 6.5 FT BOX 84 = CREW CAB 4-DR W.B.1	EPO = 2.5L 4 Cyl. EHO = 3.9L 6 Cyl. EMO = 5.9L 8 Cyl. EVO = 4.7L Magnum EHC = 3.9L SMPI V6 EML = 5.9L V8 MPI Engine EPE = 2.5L POWER TECH I-4 Cyl. EVA = 4.7L V8 MPI	DDC = TRANSMISSION - 5-SPEED HD MANUAL DG4 = TRANSMISSION-MULTI-SPEED AUTO, 45RFE DGK = TRANSMISSION - 4-SPD. AUTOMATIC,42RE DGT = TRANSMISSION - 4-SPD. AUTOMATIC,46RE DGO = AUTO. TRANS.

Group - DAN

Doors and Related Parts

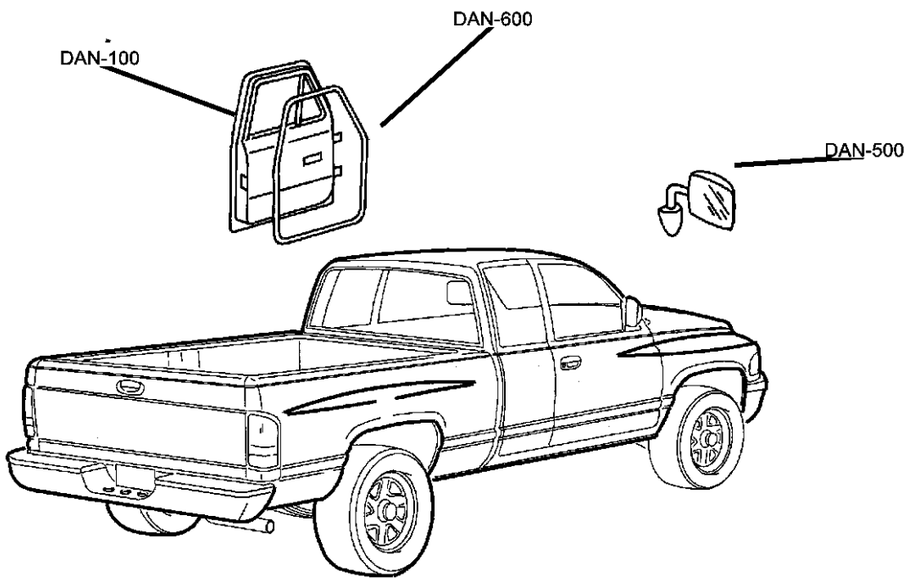

DAN-100 Front Door	DAN-200 Rear Door	DAN-500 Exterior Mirror	DAN-600 Weatherstrips and Seals
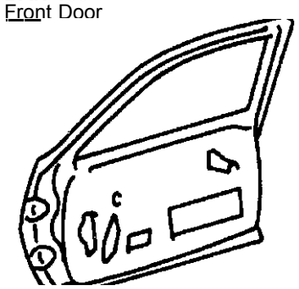	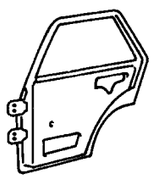	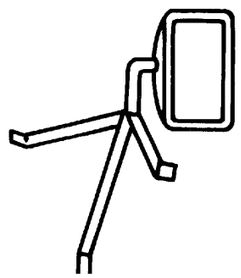	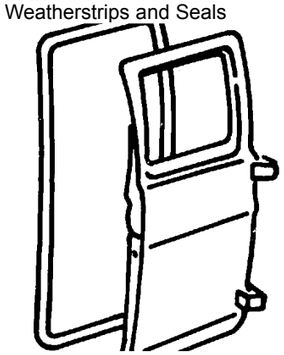

Group - DAN Doors and Related Parts

Illustration Title — Group-Fig. No.

Front Door
Door, Front Shell And Hinges ..... Fig. DAN - 110
Door, Front Glass, Regulators ..... Fig. DAN - 120
Door, Front Lock And Controls ..... Fig. DAN - 130

Rear Door
Door, Rear Shell and Hinges ..... Fig. DAN - 210
Door, Rear Glass, Regulators ..... Fig. DAN - 220
Door, Rear Lock and Controls ..... Fig. DAN - 230

Exterior Mirror
Mirrors, Exterior ..... Fig. DAN - 510

Weatherstrips and Seals
Door, Front Weatherstrips And Seals ..... Fig. DAN - 610
Door, Rear Weatherstrips and Seals ..... Fig. DAN - 620

Door, Front Shell And Hinges
Figure DAN-110

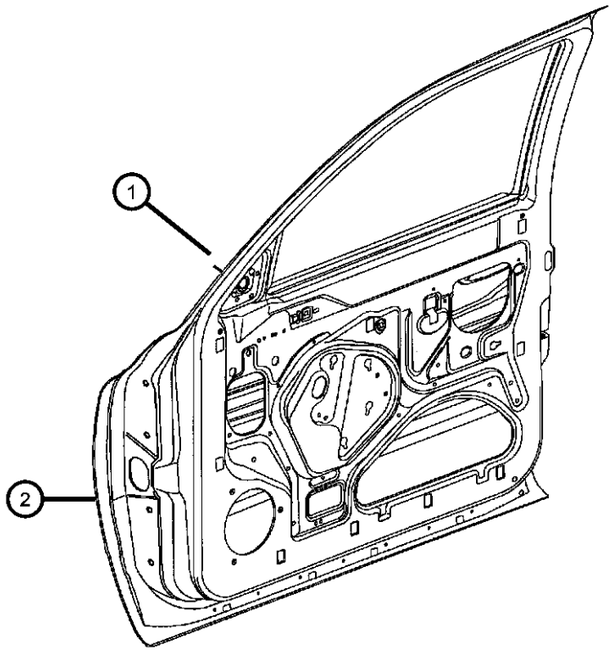

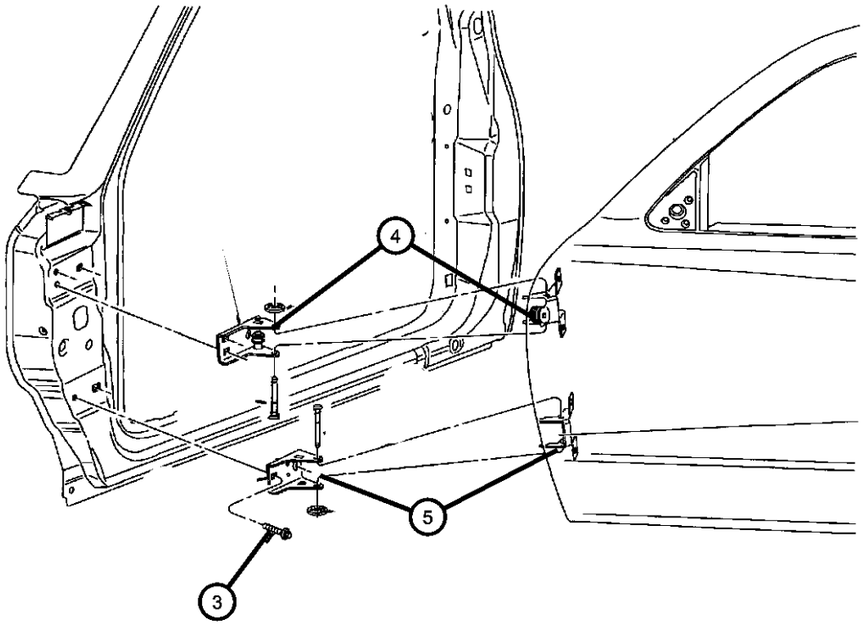

ITEM	PART NUMBER	QTY	LINE	SERIES	BODY	ENGINE	TRANS	TRIM	DESCRIPTION
1									DOOR, Front
	55255080AF	1			31, 61				Right
	55255081AF	1			31, 61				Left
	55256360AB	1			84				Right
	55256361AB	1			84				Left
2									PANEL, Door Outer
	55255462AB	1			31, 61				Right
	55255463AB	1			31, 61				Left
	55256362	1			84				Right
	55256363	1			84				Left
3	06503538	14			31, 61				SCREW AND WASHER, Hex Head, M8x1.25x30
4									HINGE, Front Door Upper
	55256914AC	1							Right
	55256915AC	1							Left
5	55256912	2			31, 61, 84				HINGE, Front Door Lower

DAKOTA (AN)

SERIES	LINE	BODY	ENGINE	TRANSMISSION
L = Quad Cab L = Regular Cab L = Club Cab	1 = Dakota 2WD 5 = Dakota 4WD	31 = CLUB CAB 2-DR 6.5 FT BOX 61 = REG CAB 6.5 FT BOX 84 = CREW CAB 4-DR W.B.1	EPO = 2.5L 4 Cyl. EHO = 3.9L 6 Cyl. EMO = 5.9L 8 Cyl. EVO = 4.7L Magnum EHC = 3.9L SMPI V6 EML = 5.9L V8 MPI Engine EPE = 2.5L POWER TECH I-4 Cyl. EVA = 4.7L V8 MPI	DDC = TRANSMISSION - 5-SPEED HD MANUAL DG4 = TRANSMISSION-MULTI-SPEED AUTO, 45RFE DGK = TRANSMISSION - 4-SPD. AUTOMATIC,42RE DGT = TRANSMISSION - 4-SPD. AUTOMATIC,46RE DGO = AUTO. TRANS.

Door, Front Glass, Regulators
Figure DAN-120

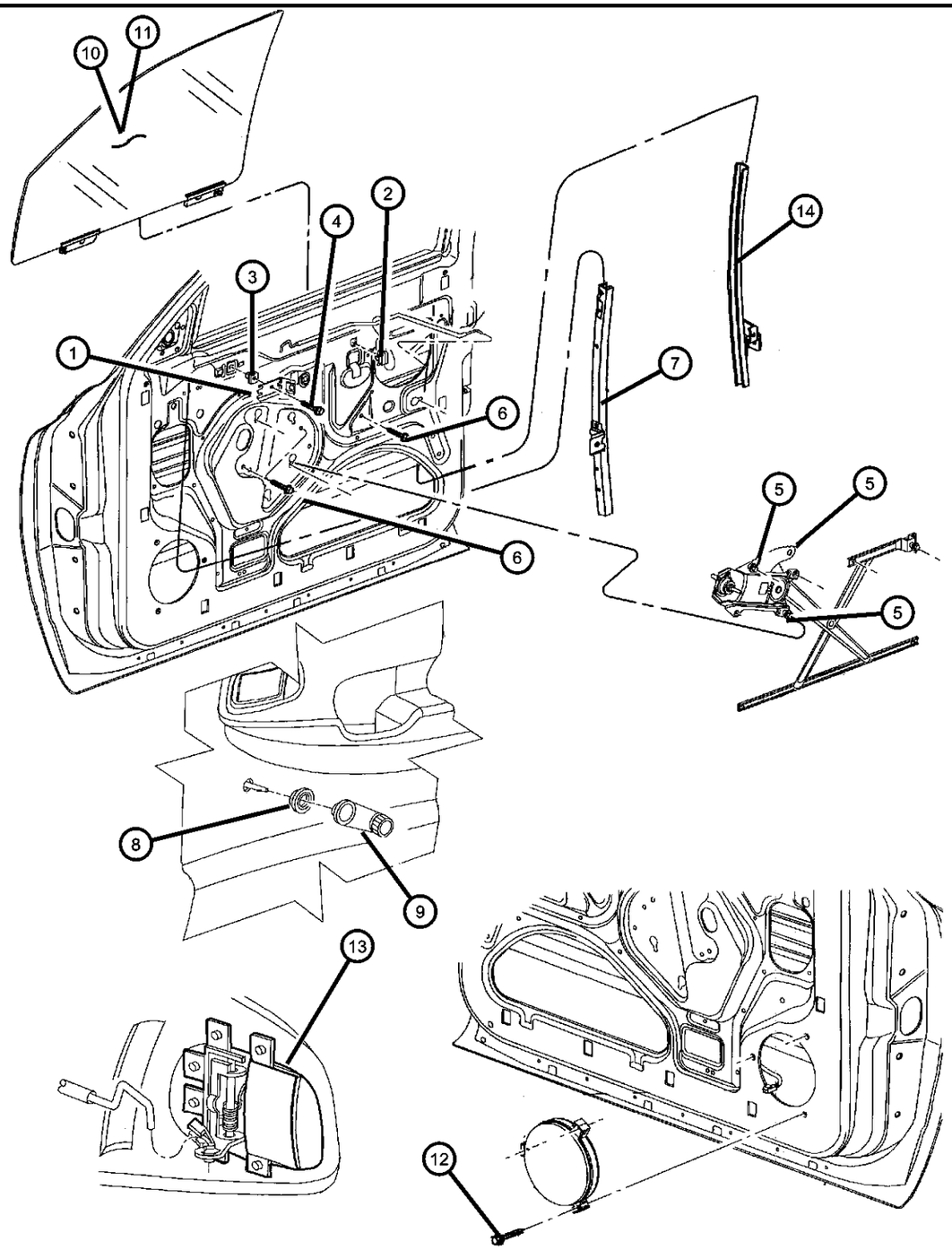

ITEM	PART NUMBER	QTY	LINE	SERIES	BODY	ENGINE	TRANS	TRIM	DESCRIPTION
1	55255833	2							BRACKET, Inside Handle
2	04673358	2							CLIP, Anti Rattle
3	04673358	2							NUT, (NOT SERVICED)
4	06035372	2							SCREW, Pan Head Tapping, M6.3x1.8x22.23
5									REGULATOR, Front Door Window
	55075799	1			31, 61, 62				Manual, Left
	55255618	1			31, 61				Electric, Right
	55255619	1			31, 61				Electric, Left
	55256314AE	1			84				Manual, Right
	55075798	1			31, 61, 62				Manual, Right
	55256315AE	1			84				Manual, Left
	55256418AI	1			84				Electric, [Up To 3-13-00], Right
	55256418AK	1			84				Electric, [After To 3-13-00], Right
	55256419AI	1			84				Electric, [Up To 3-13-00], Left
	55256419AK	1			84				Electric, [After To 3-13-00], Left
6	06504055	AR							SCREW, Hex Head, M6x1x16
7									CHANNEL, Front Door Glass Lower
	55256992	1			84				Right
	55256993	1			84				Left
	55257012AB	1			31, 61				Right
	55257013AB	1			31, 61				Left
8									SPACER, Door Handle
	55076218	2			31, 61, 62				
		2			84				
9	0FW80PX9	2							HANDLE, Window Regulator
10									GLASS, Front Door
	55257024AB	1			31, 61				Right
	55257025AB	1			31, 61				Left
11									GLASS, Door
	55256302AC	1			84				Right
	55256303AC	1			84				Left

DAKOTA (AN)

SERIES	LINE	BODY	ENGINE	TRANSMISSION
L = Quad Cab L = Regular Cab L = Club Cab	1 = Dakota 2WD 5 = Dakota 4WD	31 = CLUB CAB 2-DR 6.5 FT BOX 61 = REG CAB 6.5 FT BOX 84 = CREW CAB 4-DR W.B.1	EPO = 2.5L 4 Cyl. EHO = 3.9L 6 Cyl. EMO = 5.9L 8 Cyl. EVO = 4.7L Magnum EHC = 3.9L SMPI V6 EML = 5.9L V8 MPI Engine EPE = 2.5L POWER TECH I-4 Cyl. EVA = 4.7L V8 MPI	DDC = TRANSMISSION - 5-SPEED HD MANUAL DG4 = TRANSMISSION-MULTI-SPEED AUTO, 45RFE DGK = TRANSMISSION - 4-SPD. AUTOMATIC,42RE DGT = TRANSMISSION - 4-SPD. AUTOMATIC,46RE DGO = AUTO. TRANS.

AR = use ase required - = Non illustrrated part

Door, Front Glass, Regulators
Figure DAN-120

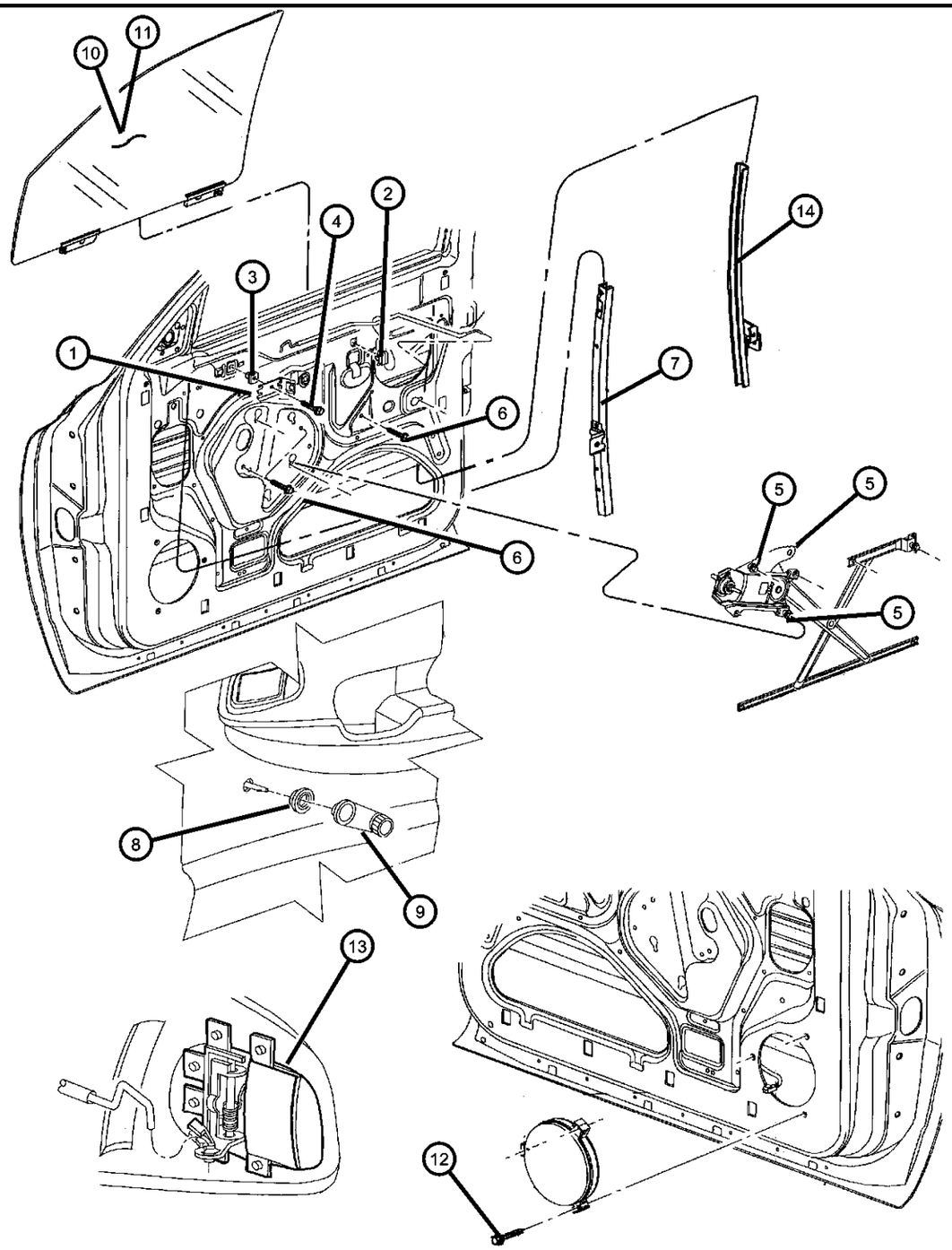

ITEM	PART NUMBER	QTY	LINE	SERIES	BODY	ENGINE	TRANS	TRIM	DESCRIPTION
12	55256303AC	1							SCREW, (NOT SERVICED)
13									HANDLE, Door Interior
	5FT38DX9	1			31, 61				Right
	5FT39DX9	1			31, 61				Left
14									CHANNEL, Rear Door Glass Lower
	55257010AC	1			31, 61				Right
	55257011AC	1			31, 61				Left

DAKOTA (AN)

SERIES	LINE	BODY	ENGINE	TRANSMISSION
L = Quad Cab L = Regular Cab L = Club Cab	1 = Dakota 2WD 5 = Dakota 4WD	31 = CLUB CAB 2-DR 6.5 FT BOX 61 = REG CAB 6.5 FT BOX 84 = CREW CAB 4-DR W.B.1	EPO = 2.5L 4 Cyl. EHO = 3.9L 6 Cyl. EMO = 5.9L 8 Cyl. EVO = 4.7L Magnum EHC = 3.9L SMPI V6 EML = 5.9L V8 MPI Engine EPE = 2.5L POWER TECH I-4 Cyl. EVA = 4.7L V8 MPI	DDC = TRANSMISSION - 5-SPEED HD MANUAL DG4 = TRANSMISSION-MULTI-SPEED AUTO, 45RFE DGK = TRANSMISSION - 4-SPD. AUTOMATIC,42RE DGT = TRANSMISSION - 4-SPD. AUTOMATIC,46RE DGO = AUTO. TRANS.

AR = use ase required - = Non illustrrated part

Door, Front Lock And Controls
Figure DAN-130

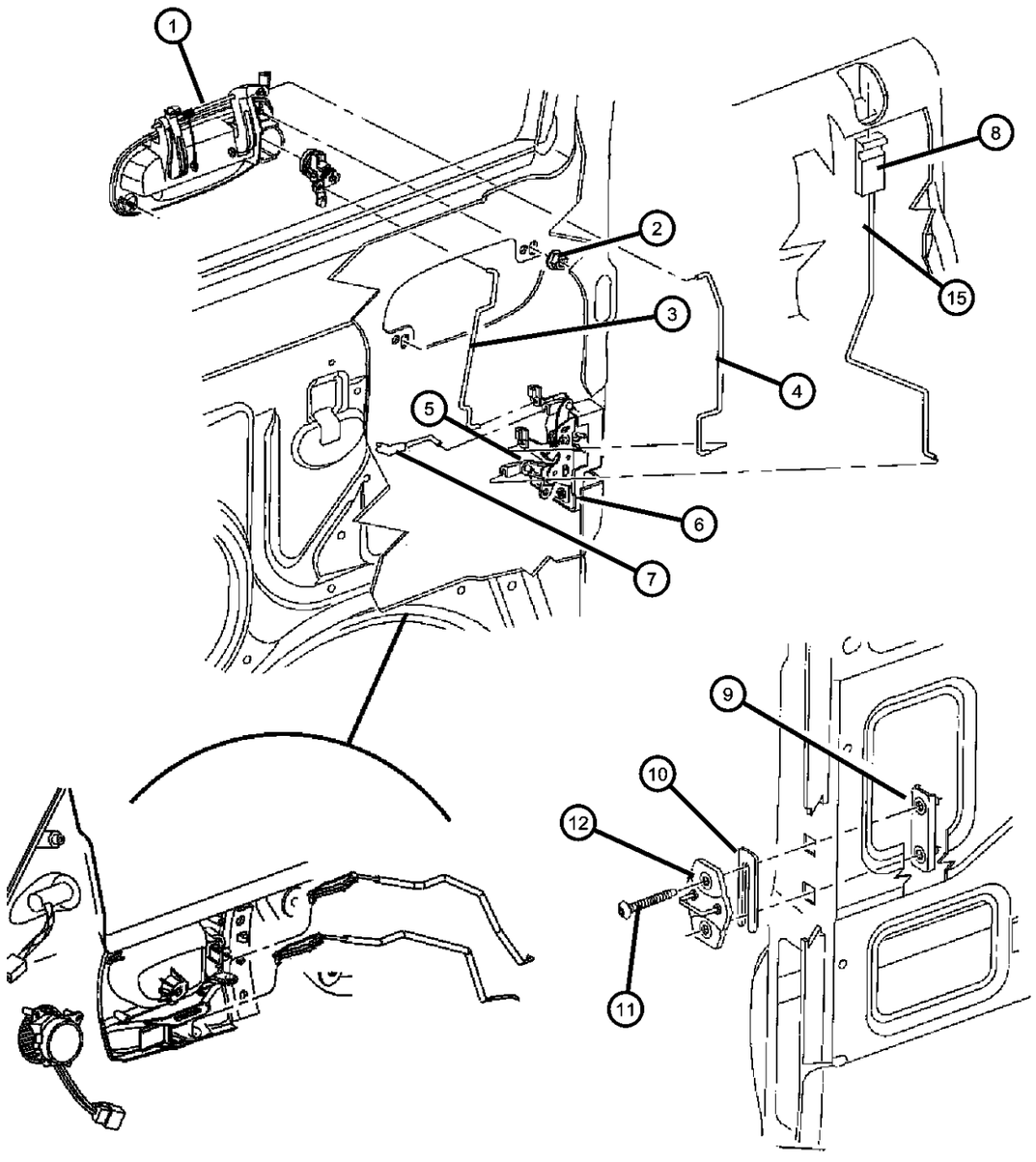

ITEM	PART NUMBER	QTY	LINE	SERIES	BODY	ENGINE	TRANS	TRIM	DESCRIPTION
1									HANDLE, Exterior Door
	55257434AA	1							Right
	55257435AA	1							Left
2									NUT AND WASHER, Hex, M5x.80
	06101443	4			31, 61, 62				
	06504047	4			84				
3									LINK, Door Latch
	55075942AB	1			31, 61				Lock to Latch, Right
	55075943AB	1			31, 61				Lock to Latch, Left
4									LINK, Door Latch
	55075944AB	1			31, 61				Handle to latch, Right
	55075945AB	1			31, 61				Handle to latch, Left
	55257274AA	2			84				Handle to latch
5									SCREW, Tapping, .25-14x1.85
	06034840	6			31, 61, 84				
		6			84				
6									LATCH, Front Door
	55256712AB	1			31, 61, 84				w/Power Locks, Right
	55256713AB	1			31, 61, 84				w/Power Locks, Left
	55256834AB	1			31, 61, 84				w/o Power Locks, Right
	55256835AB	1			31, 61, 84				w/o Power Locks, Left
7									LINK, Door Latch
	55257174AA	1			84				Right
	55257175AA	1			84				Left
	55257264AA	1			31, 61				Right
	55257265AA	1			31, 61				Left
8									BUTTON, Door Lock
	5GF56LAZAA	1			31, 61				Agate, Right
	5GF56RC3AA	1			31, 61				Mist Gray, Right
	5GF57LAZAA	1			31, 61				Agate, Left
	5GF57RC3AA	1			31, 61				Mist Gray, Left
9	55256000	2							PLATE, Front Door Striker

DAKOTA (AN)

SERIES	LINE	BODY	ENGINE	TRANSMISSION
L = Quad Cab L = Regular Cab L = Club Cab	1 = Dakota 2WD 5 = Dakota 4WD	31 = CLUB CAB 2-DR 6.5 FT BOX 61 = REG CAB 6.5 FT BOX 84 = CREW CAB 4-DR W.B.1	EPO = 2.5L 4 Cyl. EHO = 3.9L 6 Cyl. EMO = 5.9L 8 Cyl. EVO = 4.7L Magnum EHC = 3.9L SMPI V6 EML = 5.9L V8 MPI Engine EPE = 2.5L POWER TECH I-4 Cyl. EVA = 4.7L V8 MPI	DDC = TRANSMISSION - 5-SPEED HD MANUAL DG4 = TRANSMISSION-MULTI-SPEED AUTO, 45RFE DGK = TRANSMISSION - 4-SPD. AUTOMATIC,42RE DGT = TRANSMISSION - 4-SPD. AUTOMATIC,46RE DGO = AUTO. TRANS.

AR = use ase required - = Non illustrrated part

Door, Front Lock And Controls
Figure DAN-130

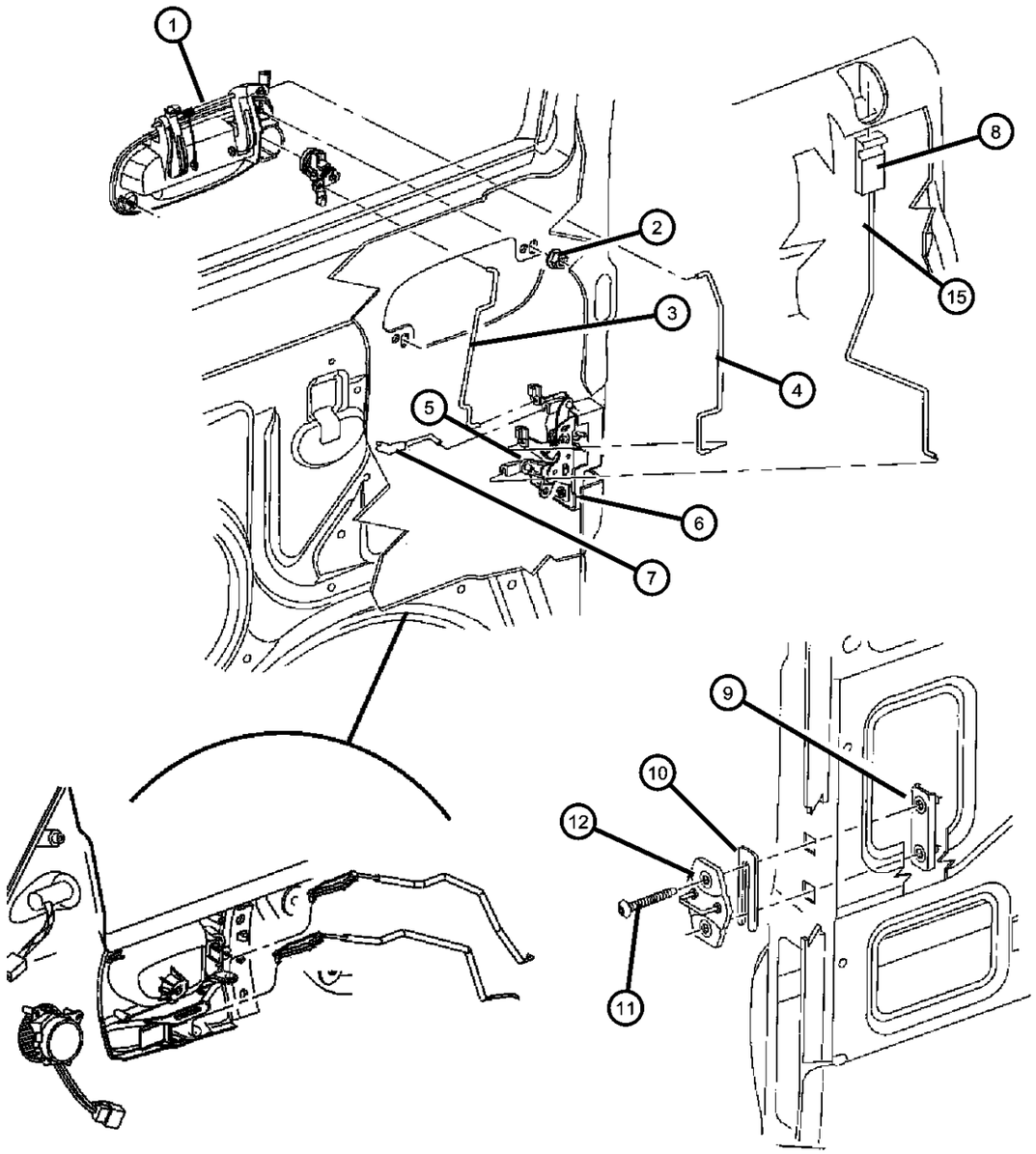

ITEM	PART NUMBER	QTY	LINE	SERIES	BODY	ENGINE	TRANS	TRIM	DESCRIPTION
10	55075483	AR							SPACER, Door Latch Striker
11	55075483	AR							SCREW, Oval Head, M8x1.25x6, (NOT SERVICED)
12	04780259AB	2							STRIKER, Door
-13									LINK AND SLEEVE, Rear Door Inside Remote to Latch
	55256908	1			84				Right
	55256909	1			84				Left
-14									LINK, Door Latch
	55257264AA	1			31, 61				Right
	55257265AA	1			31, 61				Left
15									KNOB AND LINK, Door Lock
	5FC74LAZAB	1			84				[LAZ], Right
	5FC74RC3AB	1			84				[RC3], Right
	5FC75LAZAB	1			84				[LAZ], Left
	5FC75RC3AB	1			84				[RC3], Left

DAKOTA (AN)

SERIES	LINE	BODY	ENGINE	TRANSMISSION
L = Quad Cab L = Regular Cab L = Club Cab	1 = Dakota 2WD 5 = Dakota 4WD	31 = CLUB CAB 2-DR 6.5 FT BOX 61 = REG CAB 6.5 FT BOX 84 = CREW CAB 4-DR W.B.1	EPO = 2.5L 4 Cyl. EHO = 3.9L 6 Cyl. EMO = 5.9L 8 Cyl. EVO = 4.7L Magnum EHC = 3.9L SMPI V6 EML = 5.9L V8 MPI Engine EPE = 2.5L POWER TECH I-4 Cyl. EVA = 4.7L V8 MPI	DDC = TRANSMISSION - 5-SPEED HD MANUAL DG4 = TRANSMISSION-MULTI-SPEED AUTO, 45RFE DGK = TRANSMISSION - 4-SPD. AUTOMATIC,42RE DGT = TRANSMISSION - 4-SPD. AUTOMATIC,46RE DGO = AUTO. TRANS.

AR = use ase required - = Non illustrrated part

Door, Rear Shell and Hinges
Figure DAN-210

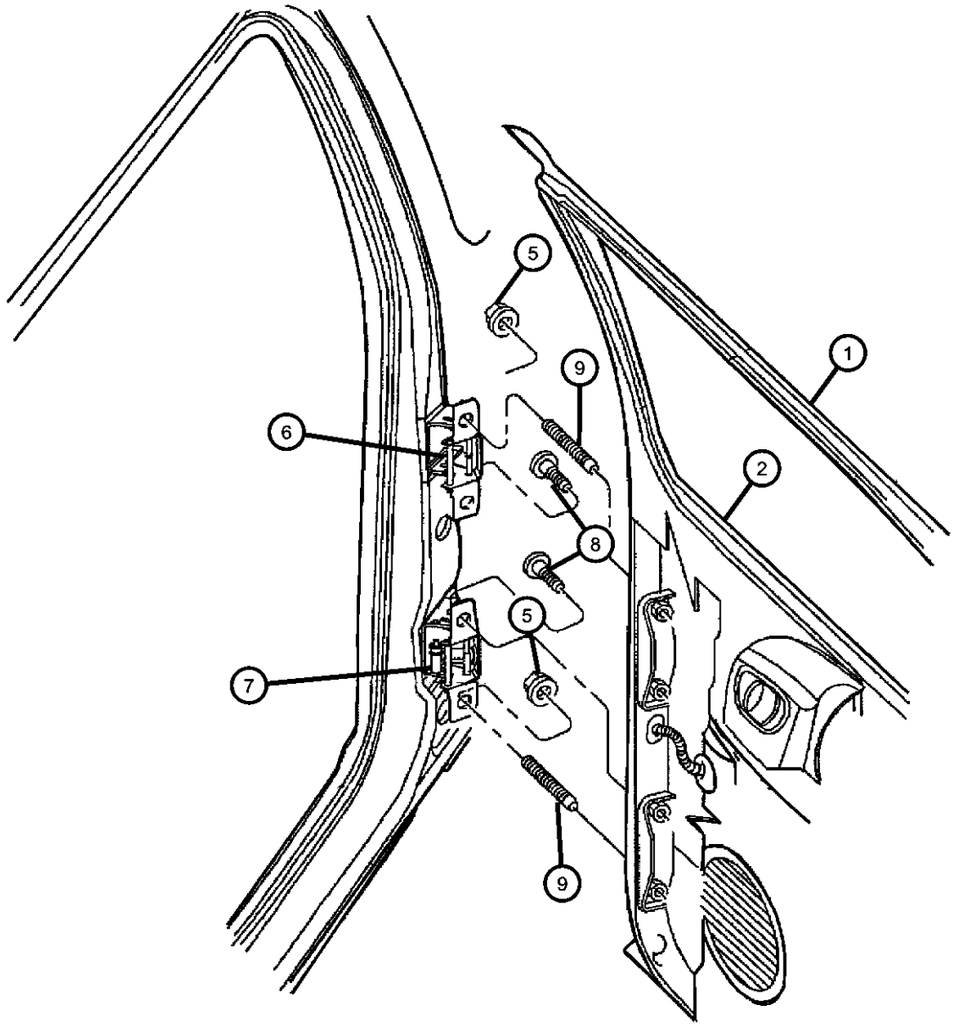

ITEM	PART NUMBER	QTY	LINE	SERIES	BODY	ENGINE	TRANS	TRIM	DESCRIPTION
1									DOOR, Rear
	55257164AA	1			84				Right
	55257165AA	1			84				Left
2									PANEL, Door Outer
	55257148AA	1			84				Right
	55257149AA	1			84				Left
-3	55032184	2			84				DEADENER, Door Panel
-4	55255776	1			84				EXTENSION, Door Glass Channel
5	06101916	4			84				NUT, Hex Weld, M8x1.25
6	55257206AA	2			84				HINGE, Rear Door Upper
7	55257208AA	2			84				HINGE, Rear Door Lower
8	06505269AA	12			84				SCREW AND WASHER, Head Head Lock, M8-1.25x30.00
9	06504804	4			84				STUD, M8-1.25x46
-10	55032184AB	2			84				DEADENER, Door Panel

DAKOTA (AN)

SERIES	LINE	BODY	ENGINE	TRANSMISSION
L = Quad Cab L = Regular Cab L = Club Cab	1 = Dakota 2WD 5 = Dakota 4WD	31 = CLUB CAB 2-DR 6.5 FT BOX 61 = REG CAB 6.5 FT BOX 84 = CREW CAB 4-DR W.B.1	EPO = 2.5L 4 Cyl. EHO = 3.9L 6 Cyl. EMO = 5.9L 8 Cyl. EVO = 4.7L Magnum EHC = 3.9L SMPI V6 EML = 5.9L V8 MPI Engine EPE = 2.5L POWER TECH I-4 Cyl. EVA = 4.7L V8 MPI	DDC = TRANSMISSION - 5-SPEED HD MANUAL DG4 = TRANSMISSION-MULTI-SPEED AUTO, 45RFE DGK = TRANSMISSION - 4-SPD. AUTOMATIC,42RE DGT = TRANSMISSION - 4-SPD. AUTOMATIC,46RE DGO = AUTO. TRANS.

Door, Rear Glass, Regulators
Figure DAN-220

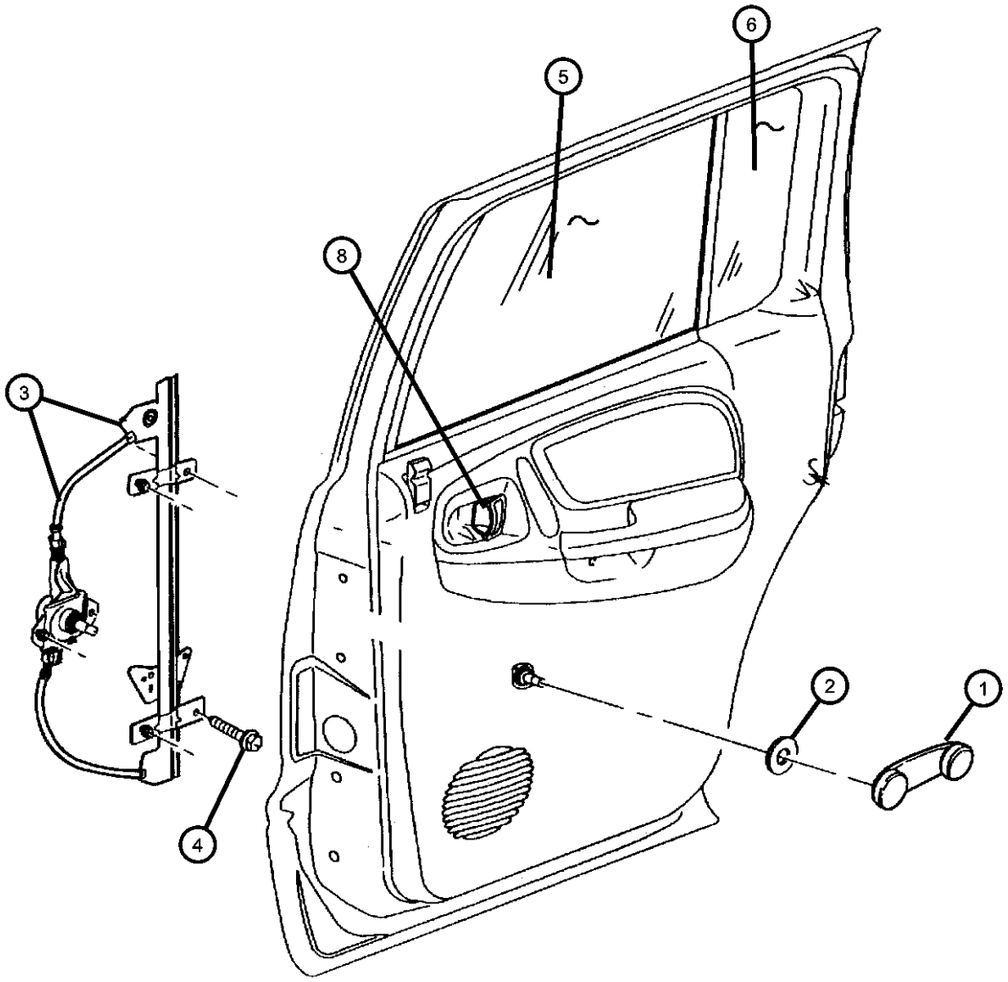

ITEM	PART NUMBER	QTY	LINE	SERIES	BODY	ENGINE	TRANS	TRIM	DESCRIPTION
1	0FW80PX9	2							HANDLE, Window Regulator
2	55076218	2			84				SPACER, Door Handle
3									REGULATOR, Rear Door Window
	55256495AH	1			84				with Power Windows, Left
	55256572AD	1			84				without Power Windows, Right
	55256573AD	1			84				without Power Windows, Left
	55256494AH	1			84				with Power Windows, Right
4	06101719	1			84				SCREW AND WASHER, Tapping, M6-1.0x20.0
5									GLASS, Rear Door
	55257190AA	1			84				Right
	55257191AA	1			84				Left
6									GLASS, Rear Door, Fixed
	55257230AA	1			84				Right
	55257231AA	1			84				Left
-7									CHANNEL, Door Glass
	55256910AC	1			84				Lower, Right
	55256911AC	1			84				Lower, Left
8									HANDLE, Door Interior
	0RZ121C3AA	1			84				[C3], Right
	0RZ121AZAA	1			84				[AZ], Right
	0RZ12DX9AA	1			84				[X9], Right
	0RZ131AZAA	1			84				[AZ], Left
	0RZ131C3AA	1			84				[C3], Left
	0RZ13DX9AA	1			84				[X9], Left

DAKOTA (AN)

SERIES	LINE	BODY	ENGINE	TRANSMISSION
L = Quad Cab	1 = Dakota 2WD	31 = CLUB CAB 2-DR 6.5 FT BOX	EPO = 2.5L 4 Cyl.	DDC = TRANSMISSION - 5-SPEED HD MANUAL
L = Regular Cab	5 = Dakota 4WD	61 = REG CAB 6.5 FT BOX	EHO = 3.9L 6 Cyl.	DG4 = TRANSMISSION-MULTI-SPEED AUTO, 45RFE
L = Club Cab		84 = CREW CAB 4-DR W.B.1	EMO = 5.9L 8 Cyl.	DGK = TRANSMISSION - 4-SPD. AUTOMATIC,42RE
			EVO = 4.7L Magnum	DGT = TRANSMISSION - 4-SPD. AUTOMATIC,46RE
			EHC = 3.9L SMPI V6	DGO = AUTO. TRANS.
			EML = 5.9L V8 MPI Engine	
			EPE = 2.5L POWER TECH I-4 Cyl.	
			EVA = 4.7L V8 MPI	

Door, Rear Lock and Controls
Figure DAN-230

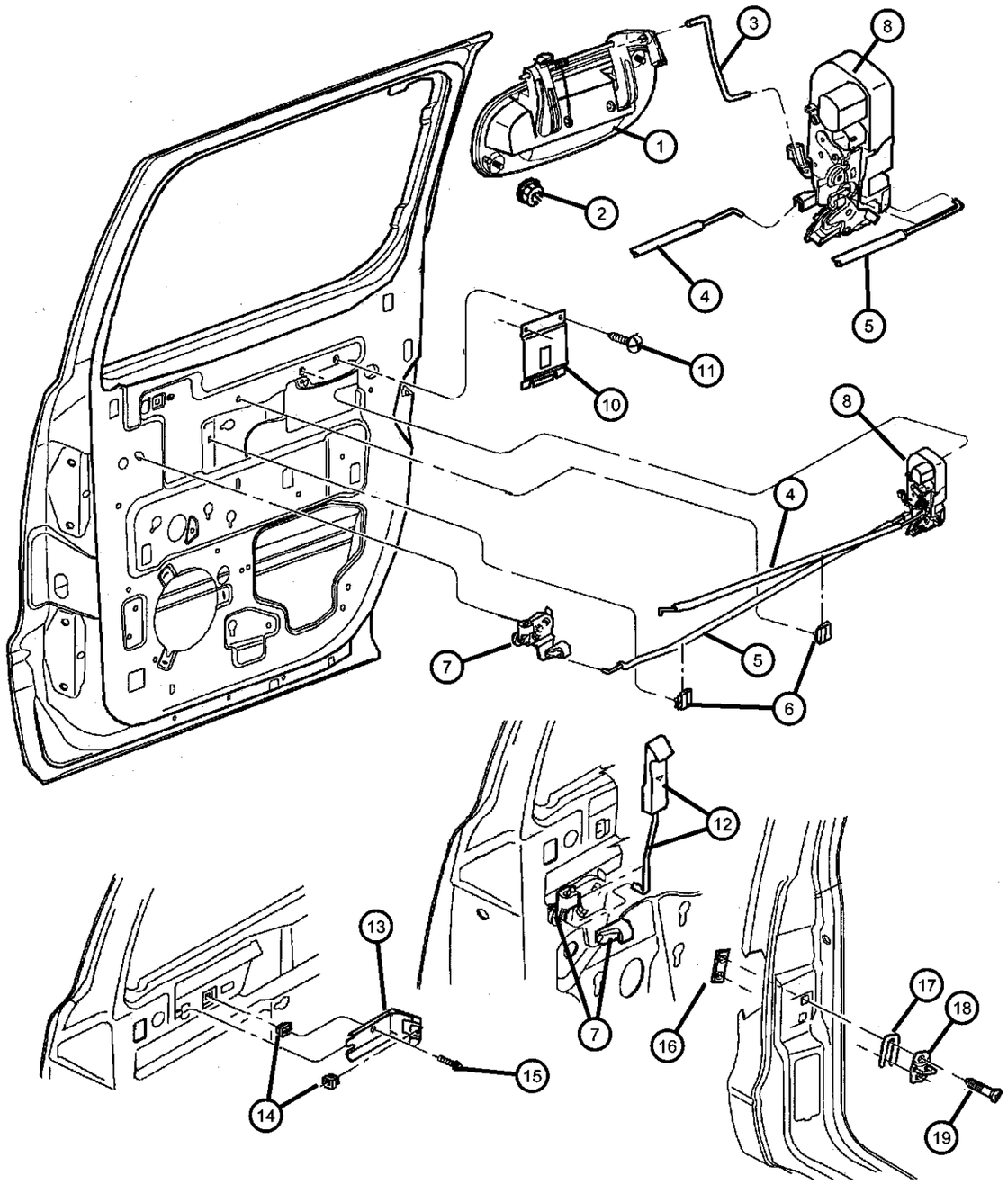

ITEM	PART NUMBER	QTY	LINE	SERIES	BODY	ENGINE	TRANS	TRIM	DESCRIPTION
1									HANDLE, Exterior Door
	55256420	1			84				Right
	55256421	1			84				Left
2	06504047	4			84				NUT AND WASHER, Hex, M5x.80
3	55257274AA	2			84				LINK, Door Latch
4									LINK, Door Latch
	55257174AA	1			84				Right
	55257175AA	1			84				Left
5									LINK, Door Latch
	55257176AA	1			84				Right
	55257177AA	1			84				Left
6	04673358	2			84				CLIP, Anti Rattle
7									BELLCRANK, Outside Door Handle
	55256722	1			84				Right
	55256723	1			84				Left
8									LATCH, Rear Door
	55256426AB	1			84				without Power Door Locks, Right
	55256427AB	1			84				without Power Door Locks, Left
	55256714AB	1			84				with Power Door Locks, Right
	55256715AB	1			84				with Power Door Locks, Left
-9	06035506	3			31, 84				SCREW, Latch Attaching
10	55257268AA	2			84				PLATE, Armrest
11	00153922	4			84				SCREW AND WASHER, Round Head, .164-15x.625
12									KNOB AND LINK, Door Lock
	5FJ24LAZ	1			84				Agate, Right
	5FJ24RC3	1			84				Mist Gray, Right
	5FJ25LAZ	1			84				Agate, Left
	5FJ25RC3	1			84				Mist Gray, Left
13	55255833	2			84				BRACKET, Inside Handle
14	06501773	4			84				NUT, Plastic Snap-in
15	06036063AA	2			84				SCREW, .250-14x.875

DAKOTA (AN)

SERIES	LINE	BODY	ENGINE	TRANSMISSION
L = Quad Cab L = Regular Cab L = Club Cab	1 = Dakota 2WD 5 = Dakota 4WD	31 = CLUB CAB 2-DR 6.5 FT BOX 61 = REG CAB 6.5 FT BOX 84 = CREW CAB 4-DR W.B.1	EPO = 2.5L 4 Cyl. EHO = 3.9L 6 Cyl. EMO = 5.9L 8 Cyl. EVO = 4.7L Magnum EHC = 3.9L SMPI V6 EML = 5.9L V8 MPI Engine EPE = 2.5L POWER TECH I-4 Cyl. EVA = 4.7L V8 MPI	DDC = TRANSMISSION - 5-SPEED HD MANUAL DG4 = TRANSMISSION-MULTI-SPEED AUTO, 45RFE DGK = TRANSMISSION - 4-SPD. AUTOMATIC,42RE DGT = TRANSMISSION - 4-SPD. AUTOMATIC,46RE DGO = AUTO. TRANS.

AR = use ase required - = Non illustrrated part

Door, Rear Lock and Controls
Figure DAN-230

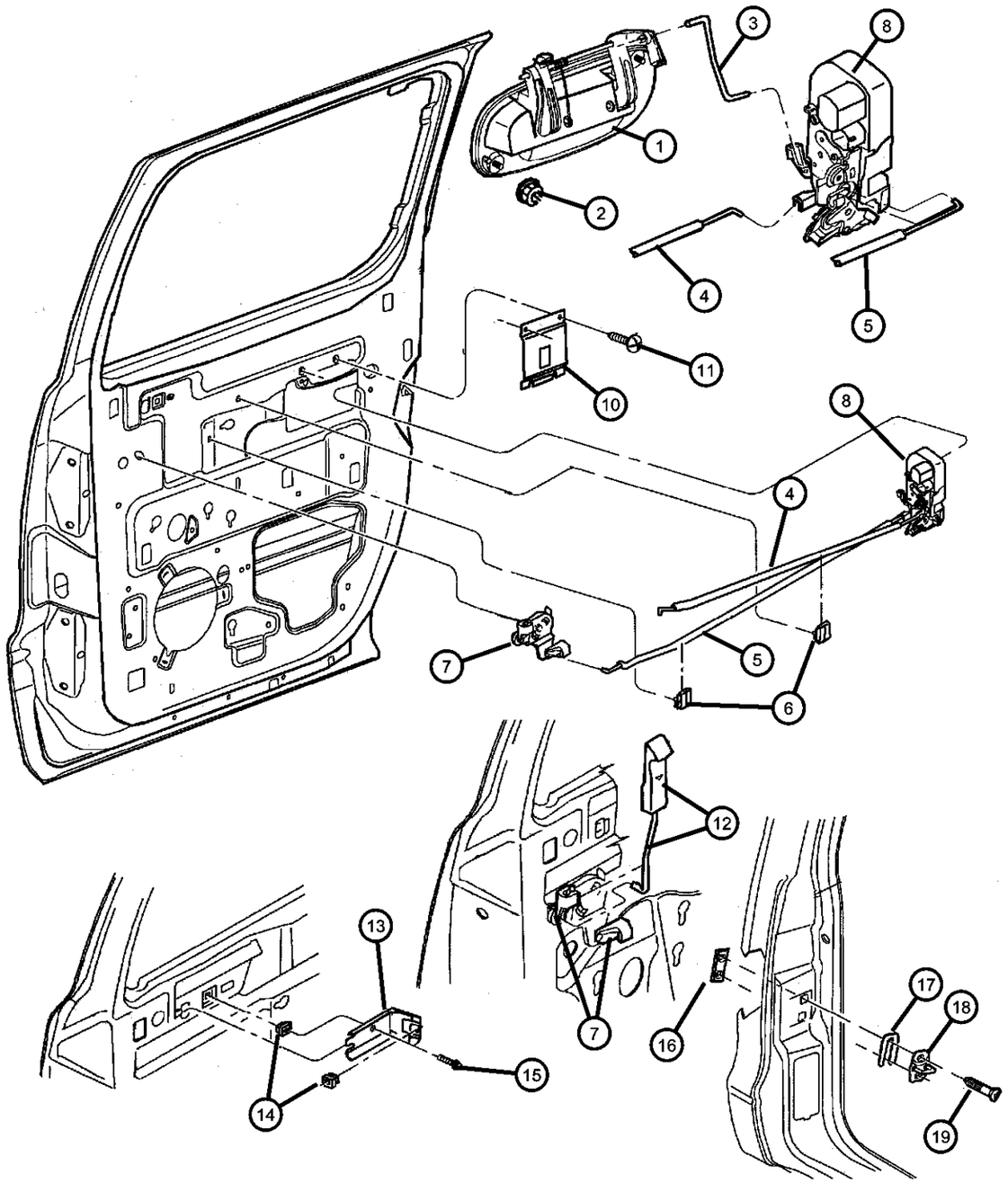

ITEM	PART NUMBER	QTY	LINE	SERIES	BODY	ENGINE	TRANS	TRIM	DESCRIPTION
16	55256000	2			84				PLATE, Front Door Striker
17	04520289	AR			84				SPACER, Door Latch Striker
18	04780259AB	2			84				STRIKER, Door
19	06504573	4			84				SCREW, Oval Head, SCREW
-20	05056072AA	2			84				LABEL, Child Protection Lock, English

DAKOTA (AN)

SERIES	LINE	BODY	ENGINE	TRANSMISSION
L = Quad Cab L = Regular Cab L = Club Cab	1 = Dakota 2WD 5 = Dakota 4WD	31 = CLUB CAB 2-DR 6.5 FT BOX 61 = REG CAB 6.5 FT BOX 84 = CREW CAB 4-DR W.B.1	EPO = 2.5L 4 Cyl. EHO = 3.9L 6 Cyl. EMO = 5.9L 8 Cyl. EVO = 4.7L Magnum EHC = 3.9L SMPI V6 EML = 5.9L V8 MPI Engine EPE = 2.5L POWER TECH I-4 Cyl. EVA = 4.7L V8 MPI	DDC = TRANSMISSION - 5-SPEED HD MANUAL DG4 = TRANSMISSION-MULTI-SPEED AUTO, 45RFE DGK = TRANSMISSION - 4-SPD. AUTOMATIC,42RE DGT = TRANSMISSION - 4-SPD. AUTOMATIC,46RE DGO = AUTO. TRANS.

AR = use ase required - = Non illustrrated part

Mirrors, Exterior
Figure DAN-510

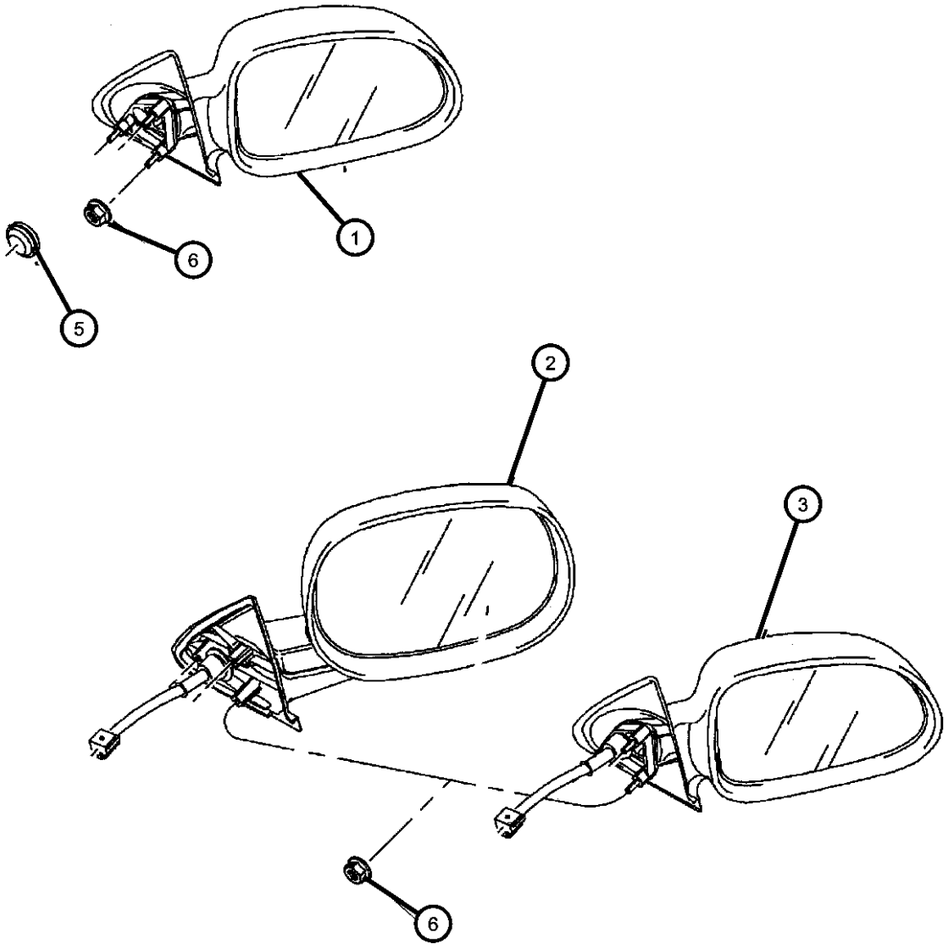

ITEM	PART NUMBER	QTY	LINE	SERIES	BODY	ENGINE	TRANS	TRIM	DESCRIPTION
1									MIRROR, Outside Rearview
	55154846AB	1							5x6 [GTU], Right
	55154847	1							5x6 [GTU], Left
2									MIRROR, Outside Rearview
	55154842AB	1							5x6 [GUR], Right
	55154843	1							5x6 [GUR], Left
3									MIRROR, Outside Rearview
	55076876AG	1							Folding [GT4][ABD} Arabic, Right
	55154844AD	1							Folding [GT4], Right
	55154845AE	1							Folding [GT4], Left
-4									MIRROR, Outside Rearview Electric Foldaway
	55077078AE	1			84				Folding [GTS], Right
	55077079AD	1			84				Folding [GTS], Left
5	55077079AD	1							PLUG, Timing Belt Cover, (NOT SERVICED),
6	J4200408	6							NUT AND WASHER, Hex Nut-Coned Washer, M5 x 0.80
-7									SWITCH, Mirror
	56021311	1			84				
		1			31, 61				
-8									KNOB, Power Mirror Switch
	56007040	1			84				
		1			31, 61, 62				
-9									NUT, Plastic
	06503107	1			31, 61, 62				
		1			84				
-10									GLASS, Mirror Replacement
	05019890AA	1							[GT4], Right
	05019891AA	1							[GT4], Left
	05019892AA	1			84				[GTS], Right
	05019893AA	1			84				[GTS], Left

DAKOTA (AN)

SERIES	LINE	BODY	ENGINE	TRANSMISSION
L = Quad Cab L = Regular Cab L = Club Cab	1 = Dakota 2WD 5 = Dakota 4WD	31 = CLUB CAB 2-DR 6.5 FT BOX 61 = REG CAB 6.5 FT BOX 84 = CREW CAB 4-DR W.B.1	EPO = 2.5L 4 Cyl. EHO = 3.9L 6 Cyl. EMO = 5.9L 8 Cyl. EVO = 4.7L Magnum EHC = 3.9L SMPI V6 EML = 5.9L V8 MPI Engine EPE = 2.5L POWER TECH I-4 Cyl. EVA = 4.7L V8 MPI	DDC = TRANSMISSION - 5-SPEED HD MANUAL DG4 = TRANSMISSION-MULTI-SPEED AUTO, 45RFE DGK = TRANSMISSION - 4-SPD. AUTOMATIC,42RE DGT = TRANSMISSION - 4-SPD. AUTOMATIC,46RE DGO = AUTO. TRANS.

Door, Front Weatherstrips And Seals
Figure DAN-610

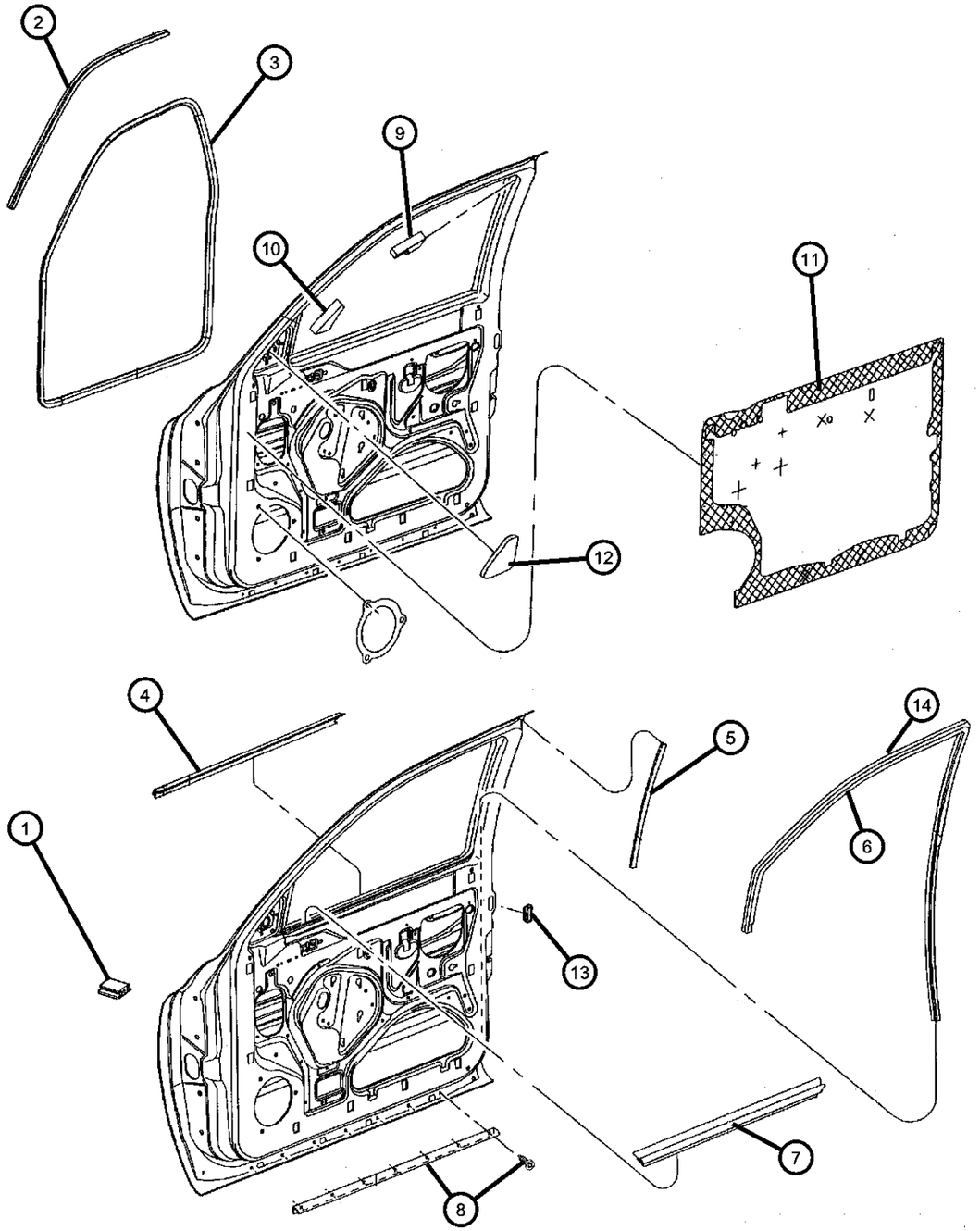

ITEM	PART NUMBER	QTY	LINE	SERIES	BODY	ENGINE	TRANS	TRIM	DESCRIPTION
1									SEAL, A-Pillar
	55257072AA	1							Right
	55257073AA	1							Left
2									SEAL, Body Side
	55257424AB	1			31, 61, 62				Right
	55257425AB	1			31, 61, 62				Left
3									SEAL, Front Door
	55255486AC	1			31, 61, 62				Right
	55255487AC	1			31, 61, 62				Left
	55362042AB	2			84				
4									SEAL, Glass Run
	55135308	1			31, 61				Right
	55135309	1			31, 61				Left
	55256708AC	1			84				Right
	55256709AC	1			84				Left
5									SEAL, B-Pillar
	55255667	2			84				
		2			31, 61				
6									SEAL, Front Door Glass Run
	55257400AB	1			31, 61				Right
	55257401AB	1			31, 61				Left
7									SEAL, Glass Run
	55255888AC	2			31, 61				
	55256710AD	1			84				Right
	55256711AD	1			84				Left
8									SEAL, Door
	55257406AA	2			31, 61				
		2			84				
9		2							SEAL, (NOT SERVICED)
10		2							SEAL, (NOT SERVICED)
11									WATERSHIELD, Front Door
	55255104AG	1			31, 61				Right

DAKOTA (AN)

SERIES	LINE	BODY	ENGINE	TRANSMISSION
L = Quad Cab L = Regular Cab L = Club Cab	1 = Dakota 2WD 5 = Dakota 4WD	31 = CLUB CAB 2-DR 6.5 FT BOX 61 = REG CAB 6.5 FT BOX 84 = CREW CAB 4-DR W.B.1	EPO = 2.5L 4 Cyl. EHO = 3.9L 6 Cyl. EMO = 5.9L 8 Cyl. EVO = 4.7L Magnum EHC = 3.9L SMPI V6 EML = 5.9L V8 MPI Engine EPE = 2.5L POWER TECH I-4 Cyl. EVA = 4.7L V8 MPI	DDC = TRANSMISSION - 5-SPEED HD MANUAL DG4 = TRANSMISSION-MULTI-SPEED AUTO, 45RFE DGK = TRANSMISSION - 4-SPD. AUTOMATIC,42RE DGT = TRANSMISSION - 4-SPD. AUTOMATIC,46RE DGO = AUTO. TRANS.

Door, Front Weatherstrips And Seals
Figure DAN-610

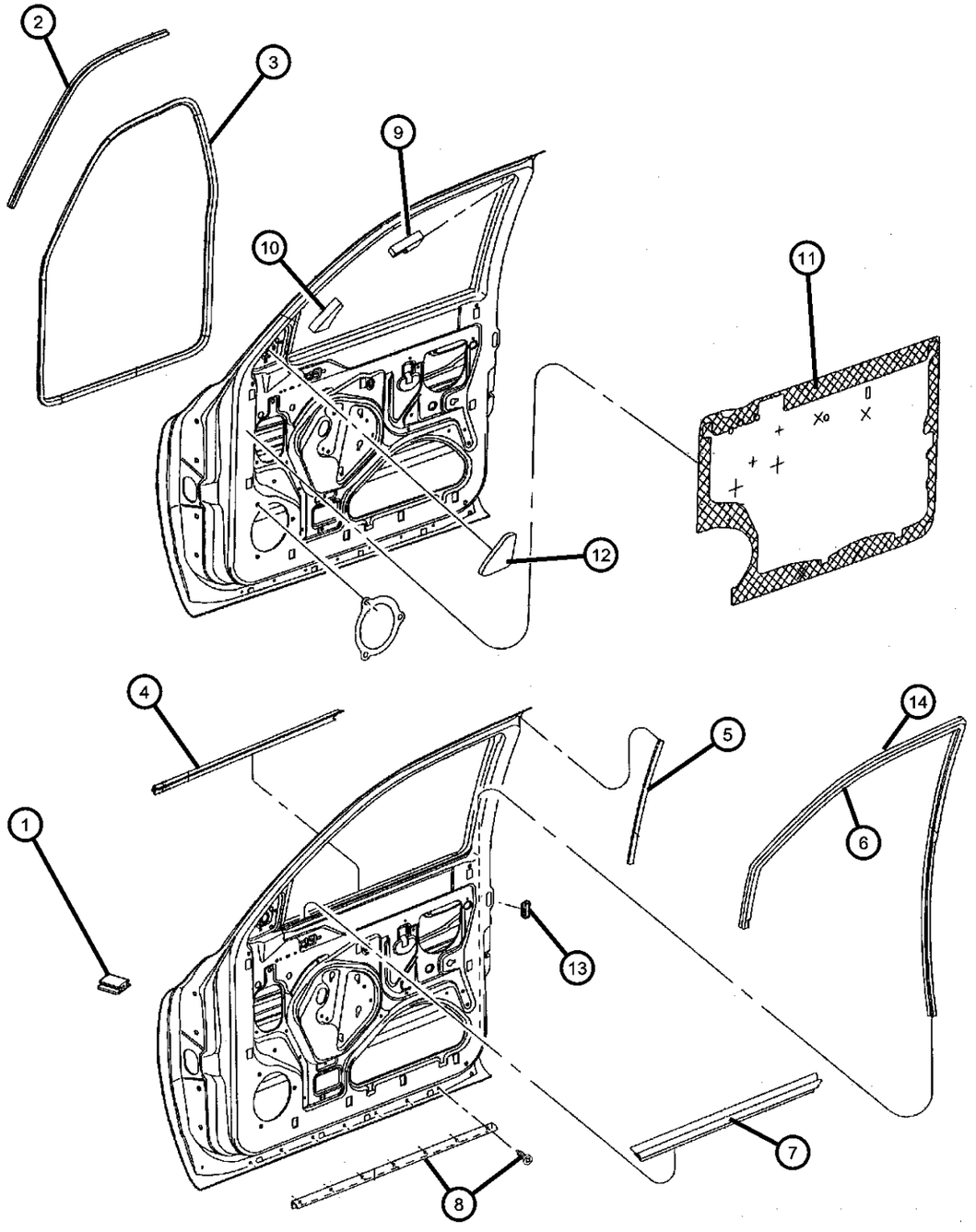

ITEM	PART NUMBER	QTY	LINE	SERIES	BODY	ENGINE	TRANS	TRIM	DESCRIPTION
	55255105AG	1			31, 61				Left
	55256394AG	1			84				Right
	55256395AG	1			84				Left
12									SEAL, Door Mirror Bezel
	55257327AB	2							Left
	55257327AC	2							Right
13	05257081	2							PLUG, Door
14									SEAL, Body Side
	55257218AA	1			84				Right
	55257219AA	1			84				Left
-15	55256706AC	2			84				SEAL, Door

DAKOTA (AN)

SERIES	LINE	BODY	ENGINE	TRANSMISSION
L = Quad Cab L = Regular Cab L = Club Cab	1 = Dakota 2WD 5 = Dakota 4WD	31 = CLUB CAB 2-DR 6.5 FT BOX 61 = REG CAB 6.5 FT BOX 84 = CREW CAB 4-DR W.B.1	EPO = 2.5L 4 Cyl. EHO = 3.9L 6 Cyl. EMO = 5.9L 8 Cyl. EVO = 4.7L Magnum EHC = 3.9L SMPI V6 EML = 5.9L V8 MPI Engine EPE = 2.5L POWER TECH I-4 Cyl. EVA = 4.7L V8 MPI	DDC = TRANSMISSION - 5-SPEED HD MANUAL DG4 = TRANSMISSION-MULTI-SPEED AUTO, 45RFE DGK = TRANSMISSION - 4-SPD. AUTOMATIC,42RE DGT = TRANSMISSION - 4-SPD. AUTOMATIC,46RE DGO = AUTO. TRANS.

Door, Rear Weatherstrips and Seals
Figure DAN-620

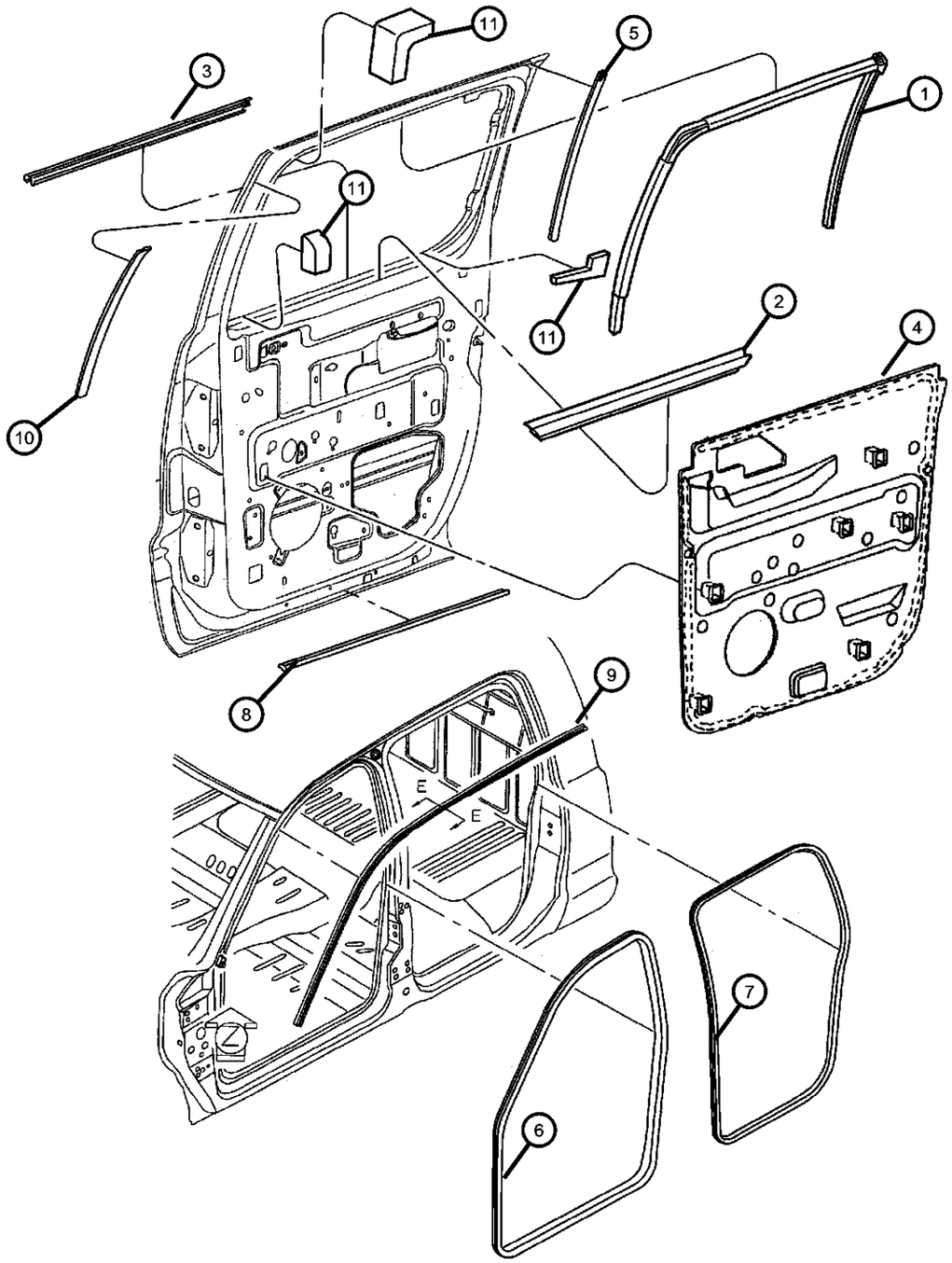

ITEM	PART NUMBER	QTY	LINE	SERIES	BODY	ENGINE	TRANS	TRIM	DESCRIPTION
1									SEAL, Rear Door
	55257186AA	1			84				Right
	55257187AA	1			84				Left
2	55257200AC	2			84				SEAL, Door, Inner
3									SEAL, Rear Door
	55257188AC	1			84				Outer, Right
	55257189AC	1			84				Outer, Left
4									WATERSHIELD, Rear Door
	55257220AA	1			84				Right
	55257221AA	1			84				Left
5	55255667	2			84				SEAL, B-Pillar
6	55362042AA	2			84				SEAL, Front Door
7	55362046AA	2			84				SEAL, Rear Door
8	55257214AA	2			84				SEAL, Door
9	55257218AA	1			84				SEAL, Body Side
10	55257473AA	2			84				SEAL, Door
11	55257473AA	2							FOAM, Air Block, (NOT SERVICED)
-12	55257100AA	2			84				BUMPER, Door

DAKOTA (AN)

SERIES	LINE	BODY	ENGINE	TRANSMISSION
L = Quad Cab	1 = Dakota 2WD	31 = CLUB CAB 2-DR 6.5 FT BOX	EPO = 2.5L 4 Cyl.	DDC = TRANSMISSION - 5-SPEED HD MANUAL
L = Regular Cab	5 = Dakota 4WD	61 = REG CAB 6.5 FT BOX	EHO = 3.9L 6 Cyl.	DG4 = TRANSMISSION-MULTI-SPEED AUTO, 45RFE
L = Club Cab		84 = CREW CAB 4-DR W.B.1	EMO = 5.9L 8 Cyl.	DGK = TRANSMISSION - 4-SPD. AUTOMATIC,42RE
			EVO = 4.7L Magnum	DGT = TRANSMISSION - 4-SPD. AUTOMATIC,46RE
			EHC = 3.9L SMPI V6	DGO = AUTO. TRANS.
			EML = 5.9L V8 MPI Engine	
			EPE = 2.5L POWER TECH I-4 Cyl.	
			EVA = 4.7L V8 MPI	

Group - EAN

Exterior Ornamentation

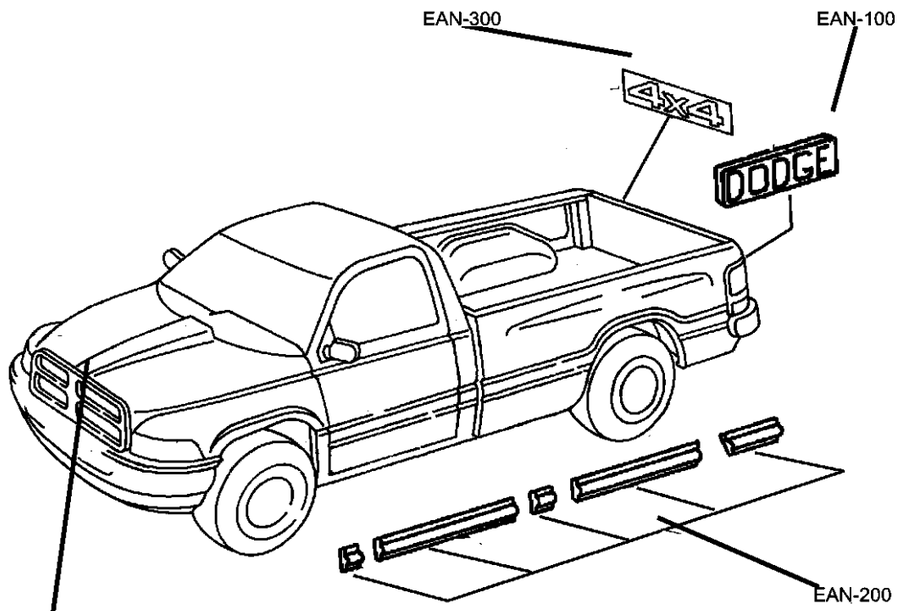

EAN-100

EAN-100 Nameplates	EAN-200 Moldings and Ornamentation	EAN-300 Decals and Tapestripes	
	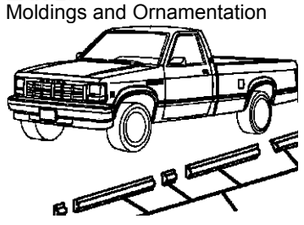	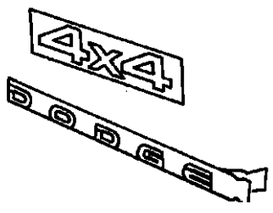	

Group - EAN Exterior Ornamentation

Illustration Title — Group-Fig. No.

Nameplates
Nameplates ..... Fig. EAN - 110

Moldings and Ornamentation
Mouldings ..... Fig. EAN - 210

Decals and Tapestripes
Decals ..... Fig. EAN - 310

Nameplates
Figure EAN-110

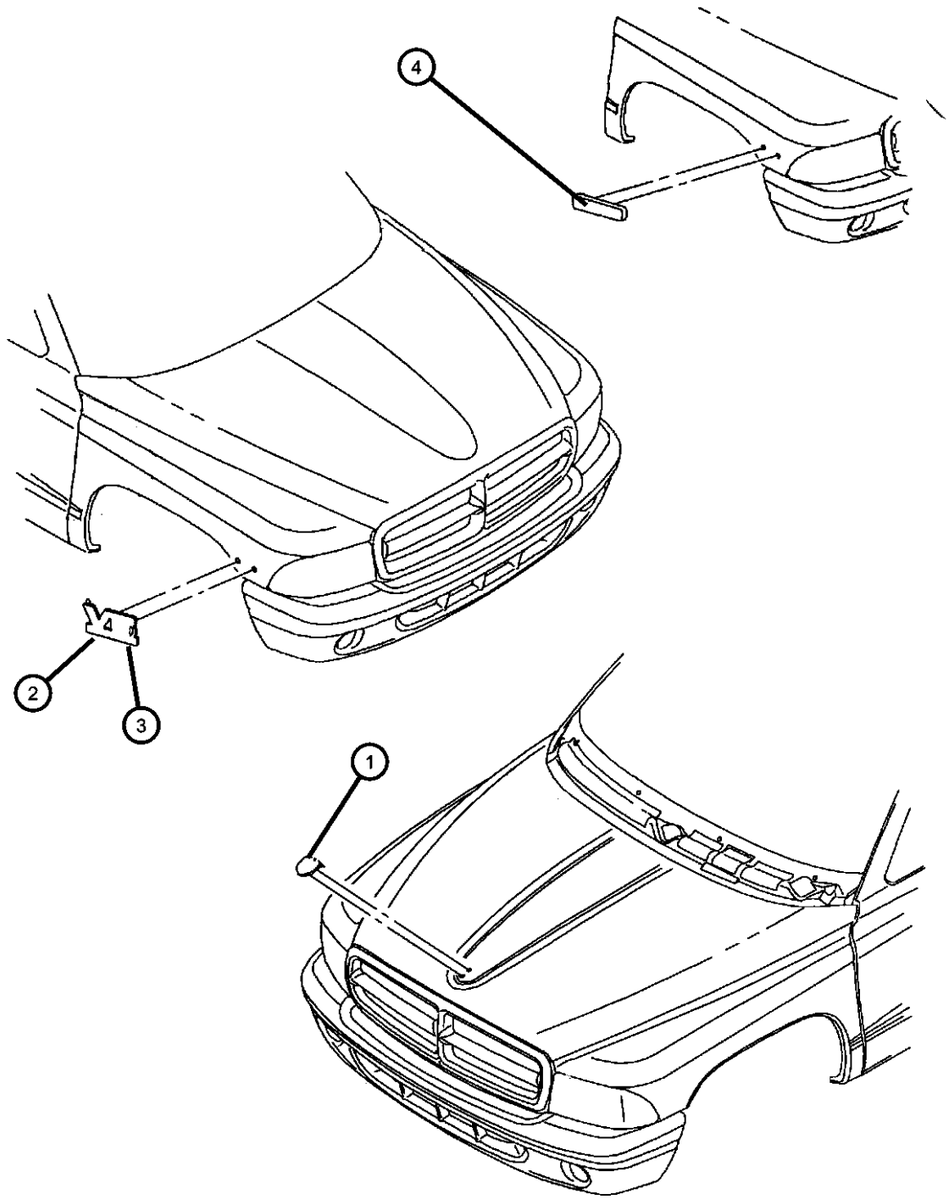

ITEM	PART NUMBER	QTY	LINE	SERIES	BODY	ENGINE	TRANS	TRIM	DESCRIPTION
1									MEDALLION, Hood, Rams Head
	55076512	1							with bezel
	55295240	1							without bezel
2	55076570	2							NAMEPLATE, V-8 Magnum
3	55076569	2							NAMEPLATE, V6 Magnum
4	55076575	2							NAMEPLATE, Magnum Power
-5	55077321AA	2			84				DIMENSIONAL GRAPHIC, Quad Cab, Chrome

DAKOTA (AN)

SERIES	LINE	BODY	ENGINE	TRANSMISSION
L = Quad Cab L = Regular Cab L = Club Cab	1 = Dakota 2WD 5 = Dakota 4WD	31 = CLUB CAB 2-DR 6.5 FT BOX 61 = REG CAB 6.5 FT BOX 84 = CREW CAB 4-DR W.B.1	EPO = 2.5L 4 Cyl. EHO = 3.9L 6 Cyl. EMO = 5.9L 8 Cyl. EVO = 4.7L Magnum EHC = 3.9L SMPI V6 EML = 5.9L V8 MPI Engine EPE = 2.5L POWER TECH I-4 Cyl. EVA = 4.7L V8 MPI	DDC = TRANSMISSION - 5-SPEED HD MANUAL DG4 = TRANSMISSION-MULTI-SPEED AUTO, 45RFE DGK = TRANSMISSION - 4-SPD. AUTOMATIC,42RE DGT = TRANSMISSION - 4-SPD. AUTOMATIC,46RE DGO = AUTO. TRANS.

Mouldings
Figure EAN-210

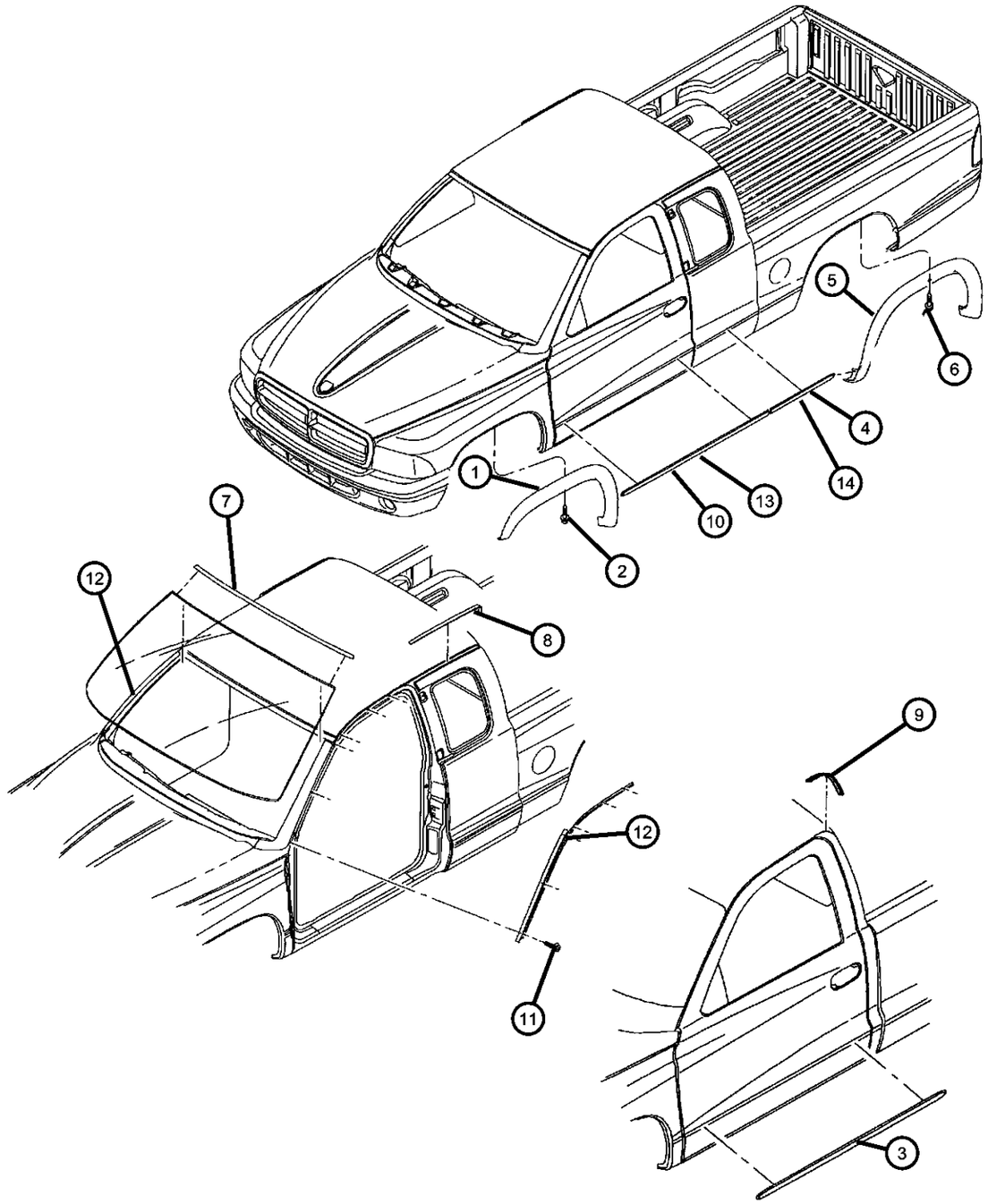

ITEM	PART NUMBER	QTY	LINE	SERIES	BODY	ENGINE	TRANS	TRIM	DESCRIPTION
1									MOLDING, Wheel Opening Flare
	5FJ52DX8AB	1							[K2X], Right
	5FJ52GW7AB	1							[K2W], Right
	5FJ52MFAAB	1							[K2A], Right
	5FJ52PR4AB	1							[K2R], Right
	5FJ52SG8AB	1							[K2H], Right
	5FJ52VB3AB	1							[K2C], Right
	5FJ52VYHAB	1							[K2Y], Right
	5FJ52WBTAB	1							[K2K], Right
	5FJ52XRVAB	1							[K2G], Right
	5FJ52XTLAB	1							[K2T], Right
	5FJ52XV3AB	1							[K2F], Right
	5FJ53DX8AB	1							[K2X], Left
	5FJ53GW7AB	1							[K2W], Left
	5FJ53MFAAB	1							[K2A], Left
	5FJ53PR4AB	1							[K2R], Left
	5FJ53SG8AB	1							[K2H], Left
	5FJ53VB3AB	1							[K2C], Left
	5FJ53VYHAB	1							[K2Y], Left
	5FJ53WBTAB	1							[K2K], Left
2	5FJ53WBTAB	1							SCREW, (NOT SERVICED),
3	5EA50DX9	2			61, 62, 84				MOLDING, Cab, [K1X]
4	5EA56DX9	2			31				MOLDING, Cab
5									MOLDING, Wheel Opening Flare
	5FJ54DX8AC	1			31, 61				[K2X], Right
	5FJ54GW7AC	1			31, 61				[K2W], Right
	5FJ54MFAAC	1			31, 61				[K2A], Right
	5FJ54PR4AC	1			31, 61				[K2R], Right
	5FJ54SG8AC	1			31, 61				[K2H], Right
	5FJ54VB3AC	1			31, 61				[K2C], Right
	5FJ54VYHAC	1			31, 61				[K2Y], Right
	5FJ54WBTAC	1			31, 61				[K2K], Right

DAKOTA (AN)

SERIES	LINE	BODY	ENGINE	TRANSMISSION
L = Quad Cab L = Regular Cab L = Club Cab	1 = Dakota 2WD 5 = Dakota 4WD	31 = CLUB CAB 2-DR 6.5 FT BOX 61 = REG CAB 6.5 FT BOX 84 = CREW CAB 4-DR W.B.1	EPO = 2.5L 4 Cyl. EHO = 3.9L 6 Cyl. EMO = 5.9L 8 Cyl. EVO = 4.7L Magnum EHC = 3.9L SMPI V6 EML = 5.9L V8 MPI Engine EPE = 2.5L POWER TECH I-4 Cyl. EVA = 4.7L V8 MPI	DDC = TRANSMISSION - 5-SPEED HD MANUAL DG4 = TRANSMISSION-MULTI-SPEED AUTO, 45RFE DGK = TRANSMISSION - 4-SPD. AUTOMATIC,42RE DGT = TRANSMISSION - 4-SPD. AUTOMATIC,46RE DGO = AUTO. TRANS.

Mouldings
Figure EAN-210

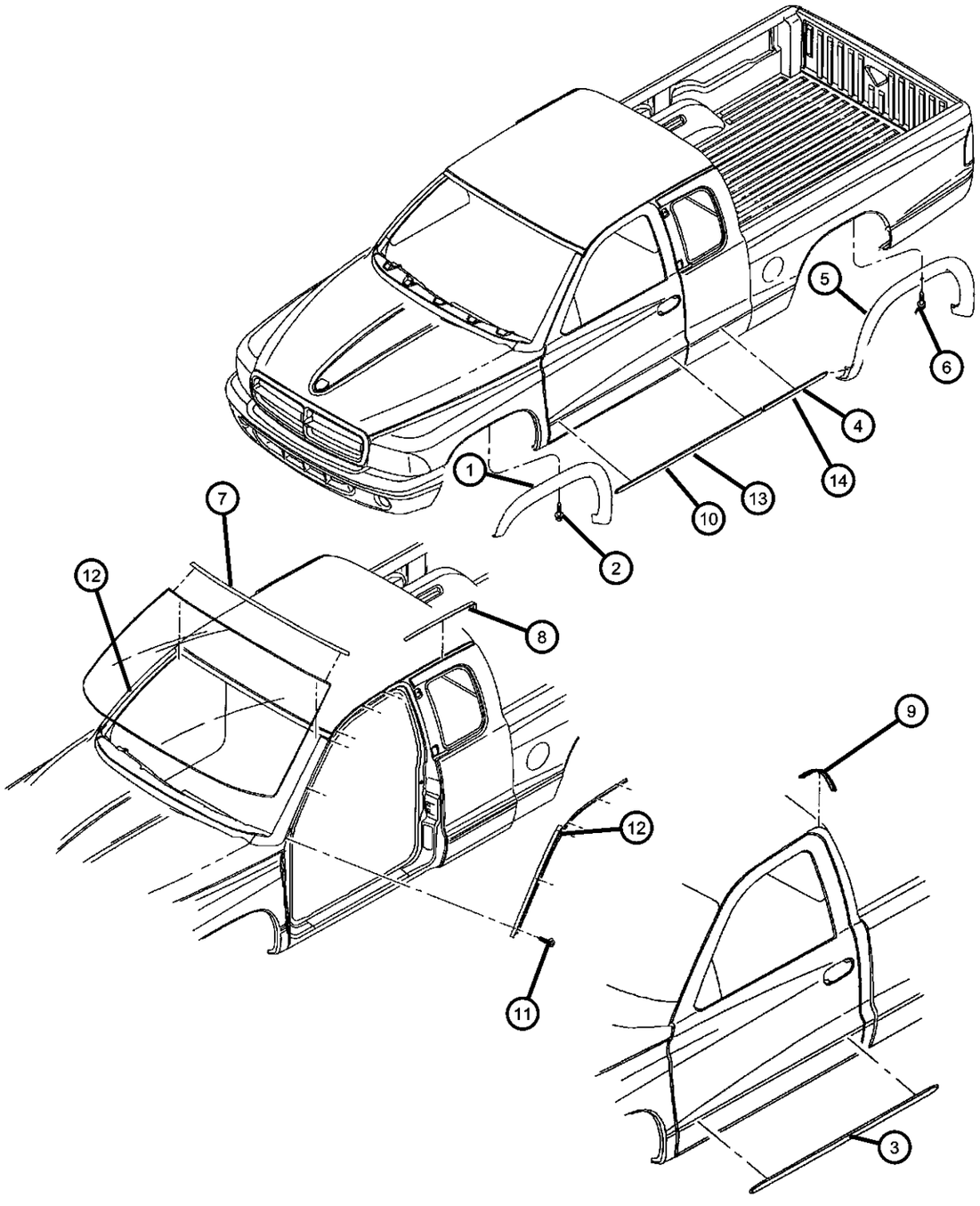

ITEM	PART NUMBER	QTY	LINE	SERIES	BODY	ENGINE	TRANS	TRIM	DESCRIPTION
	5FJ54XRVAC	1			31, 61				[K2G], Right
	5FJ54XTLAC	1			31, 61				[K2T], Right
	5FJ54XV3AC	1			31, 61				[K2F], Right
	5FJ55DX8AC	1			31, 61				[K2X], Left
	5FJ55GW7AC	1			31, 61				[K2W], Left
	5FJ55MFAAC	1			31, 61				[K2A], Left
	5FJ55PR4AC	1			31, 61				[K2R], Left
	5FJ55SG8AC	1			31, 61				[K2H], Left
	5FJ55VB3AC	1			31, 61				[K2C], Left
	5FJ55VYHAC	1			31, 61				[K2Y], Left
	5FJ55WBTAC	1			31, 61				[K2K], Left
	5FJ55XRVAC	1			31, 61				[K2G], Left
	5FJ55XTLAC	1			31, 61				[K2T], Left
	5FJ55XV3AC	1			31, 61				[K2F], Left
	5GU76DX8AB	1			84				[K2X], Right
	5GU76GW7AB	1			84				[K2W], Right
	5GU76MFAAB	1			84				[K2A], Right
	5GU76PR4AB	1			84				[K2R], Right
	5GU76SG8AB	1			84				[K2H], Right
	5GU76VB3AB	1			84				[K2C], Right
	5GU76VY-HAB	1			84				[K2Y], Right
	5GU76WBTAB	1			84				[K2K], Right
	5GU76XRVAB	1			84				[K2G], Right
	5GU76XTLAB	1			84				[K2T], Right
	5GU76XV3AB	1			84				[K2F], Right
	5GU77DX8AB	1			84				[K2X], Left
	5GU77GW7AB	1			84				[K2W], Left
	5GU77MFAAB	1			84				[K2A], Left
	5GU77PR4AB	1			84				[K2R], Left
	5GU77SG8AB	1			84				[K2H], Left
	5GU77VB3AB	1			84				[K2C], Left

DAKOTA (AN)

SERIES	LINE	BODY	ENGINE	TRANSMISSION
L = Quad Cab	1 = Dakota 2WD	31 = CLUB CAB 2-DR 6.5 FT BOX	EPO = 2.5L 4 Cyl.	DDC = TRANSMISSION - 5-SPEED HD MANUAL
L = Regular Cab	5 = Dakota 4WD	61 = REG CAB 6.5 FT BOX	EHO = 3.9L 6 Cyl.	DG4 = TRANSMISSION-MULTI-SPEED AUTO, 45RFE
L = Club Cab		84 = CREW CAB 4-DR W.B.1	EMO = 5.9L 8 Cyl.	DGK = TRANSMISSION - 4-SPD. AUTOMATIC,42RE
			EVO = 4.7L Magnum	DGT = TRANSMISSION - 4-SPD. AUTOMATIC,46RE
			EHC = 3.9L SMPI V6	DGO = AUTO. TRANS.
			EML = 5.9L V8 MPI Engine	
			EPE = 2.5L POWER TECH I-4 Cyl.	
			EVA = 4.7L V8 MPI	

AR = use ase required - = Non illustrrated part

Mouldings
Figure EAN-210

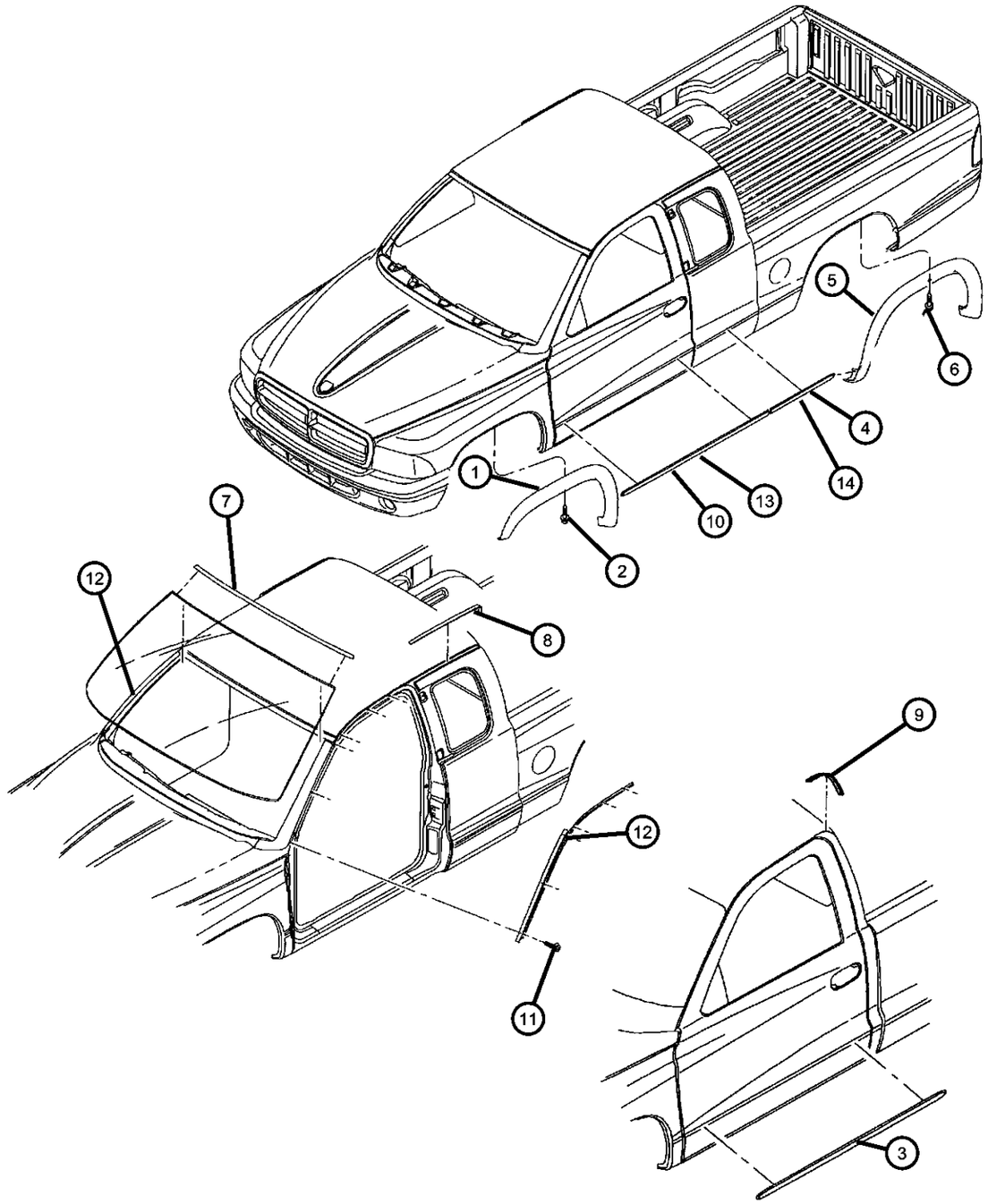

ITEM	PART NUMBER	QTY	LINE	SERIES	BODY	ENGINE	TRANS	TRIM	DESCRIPTION
	5GU77VY-HAB	1			84				[K2Y], Left
	5GU77WBTAB	1			84				[K2K], Left
	5GU77XRVAB	1			84				[K2G], Left
	5GU77XTLAB	1			84				[K2T], Left
	5GU77XV3AB	1			84				[K2F], Left
6	5GU77XV3AB	1							SCREW, (NOT SERVICED),
7	55255723AD	1							MOLDING, Windshield
8									MOLDING, Roof Joint
	55255682AC	1			61, 62				Right
	55255683AC	1			61				Left
	55257094AB	1			31				Right
	55257095AB	1			31				Left
	55257236AA	1			84				Right
	55257237AA	1			84				Left
9									MOLDING, Roof Joint
	55255682AC	1			61, 62				Right
	55255683AC	1			61, 62				Left
	55257094AB	1			31				Right
	55257095AB	1			31				Left
10	5EA54DX9	2			31				MOLDING, Door
11	06101946	4							SCREW, Tapping
12									MOLDING, Windshield Reveal
	55257310AB	1			31, 61				Right
	55257311AB	1			31, 61				Left
13	5FX95DX9AA	2			84				MOLDING, Front Door
14	5FX96DX9AA	2			84				MOLDING, Rear Door
-15									MOLDING, Windshield
	55256348AD	1			84				Right
	55256349AD	1			84				Left
-16	55257222AA	2			84				RETAINER, Weatherstrip

DAKOTA (AN)

SERIES	LINE	BODY	ENGINE	TRANSMISSION
L = Quad Cab L = Regular Cab L = Club Cab	1 = Dakota 2WD 5 = Dakota 4WD	31 = CLUB CAB 2-DR 6.5 FT BOX 61 = REG CAB 6.5 FT BOX 84 = CREW CAB 4-DR W.B.1	EPO = 2.5L 4 Cyl. EHO = 3.9L 6 Cyl. EMO = 5.9L 8 Cyl. EVO = 4.7L Magnum EHC = 3.9L SMPI V6 EML = 5.9L V8 MPI Engine EPE = 2.5L POWER TECH I-4 Cyl. EVA = 4.7L V8 MPI	DDC = TRANSMISSION - 5-SPEED HD MANUAL DG4 = TRANSMISSION-MULTI-SPEED AUTO, 45RFE DGK = TRANSMISSION - 4-SPD. AUTOMATIC,42RE DGT = TRANSMISSION - 4-SPD. AUTOMATIC,46RE DGO = AUTO. TRANS.

Decals
Figure EAN-310

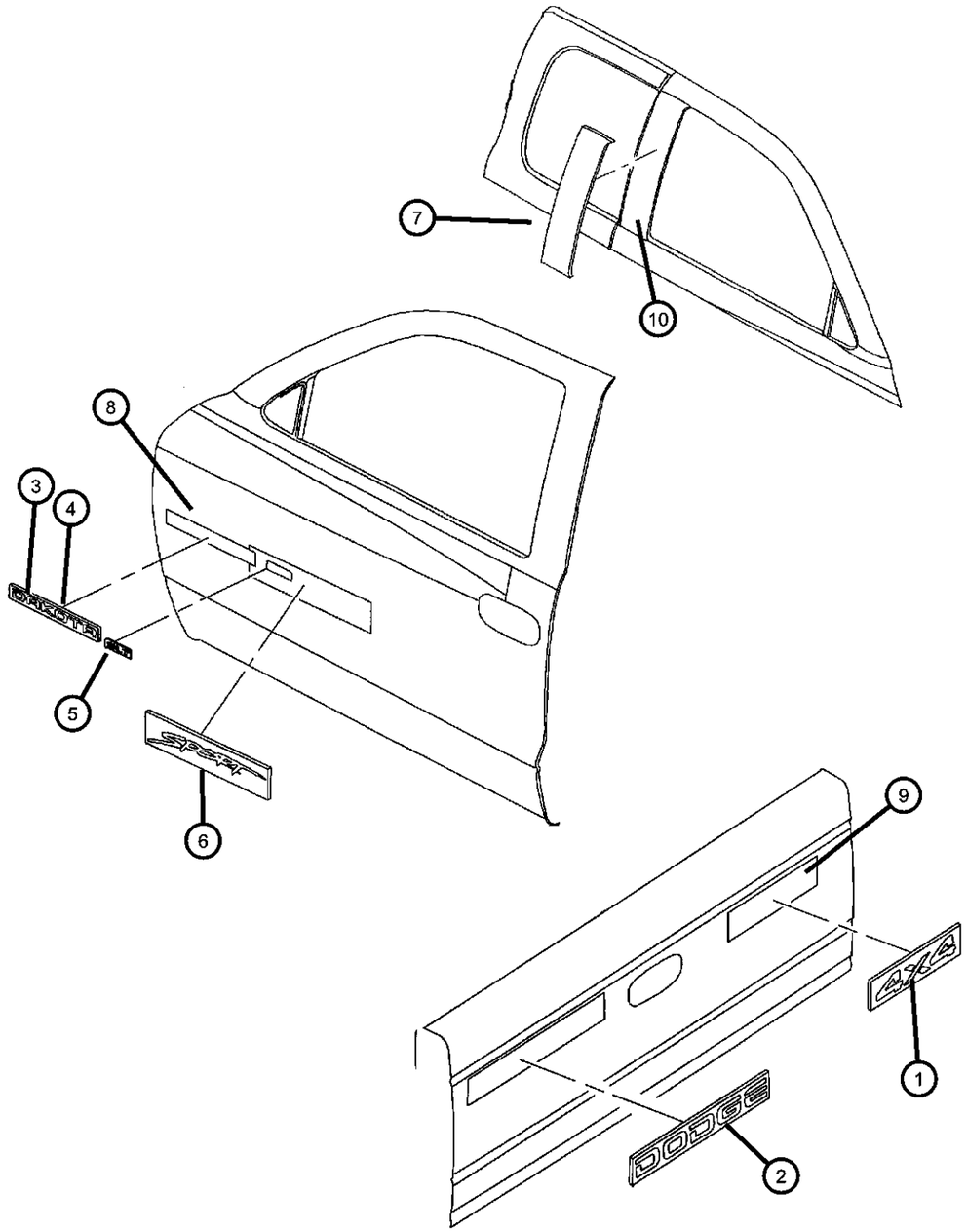

ITEM	PART NUMBER	QTY	LINE	SERIES	BODY	ENGINE	TRANS	TRIM	DESCRIPTION
1									DECAL, 4 x 4
	5DV76PCH	1	5		31, 61, 84				Blue
	5DV76PX9	1	5						Black
	5DV76TA1	1	5						Silver
2									DECAL, Dodge
	5DV73PCH	1							Blue
	5DV73PX9	1							Black
	5DV73TA1	1							Silver
3									DECAL, Dakota
	5EW53CA1	1							Silver, Left
	5EW53GX9	1							Black, Left
	5EW53PCH	1							Blue, Left
	5FM58CA1	1							Silver, Right
	5FM58GX9	1							Black, Right
	5FM58PCH	1							Blue, Right
4	55076518	2							DECAL, Dakota, Chrome
5	55076431AB	2							DECAL, SLT
6									DECAL, Sport
	5EW57CA1AB	2							Silver
	5EW57GX9AB	2							Black
	5EW57PCHAB	2							Blue
7									DECAL
	55076978AE	1			31				Right
	55076979AE	1			31				Left
8									DECAL, R/T, Door
	5GN13CA1AA	1			31, 61				Silver
	5GN13GX9AA	1			31, 61				Black
	5GN13PCHAA	1			31, 61				Blue
9									DECAL, R/T, Tailgate
	5EW59CA1	1							Silver
	5EW59GX9	1							Black

DAKOTA (AN)

SERIES	LINE	BODY	ENGINE	TRANSMISSION
L = Quad Cab L = Regular Cab L = Club Cab	1 = Dakota 2WD 5 = Dakota 4WD	31 = CLUB CAB 2-DR 6.5 FT BOX 61 = REG CAB 6.5 FT BOX 84 = CREW CAB 4-DR W.B.1	EPO = 2.5L 4 Cyl. EHO = 3.9L 6 Cyl. EMO = 5.9L 8 Cyl. EVO = 4.7L Magnum EHC = 3.9L SMPI V6 EML = 5.9L V8 MPI Engine EPE = 2.5L POWER TECH I-4 Cyl. EVA = 4.7L V8 MPI	DDC = TRANSMISSION - 5-SPEED HD MANUAL DG4 = TRANSMISSION-MULTI-SPEED AUTO, 45RFE DGK = TRANSMISSION - 4-SPD. AUTOMATIC,42RE DGT = TRANSMISSION - 4-SPD. AUTOMATIC,46RE DGO = AUTO. TRANS.

Decals
Figure EAN-310

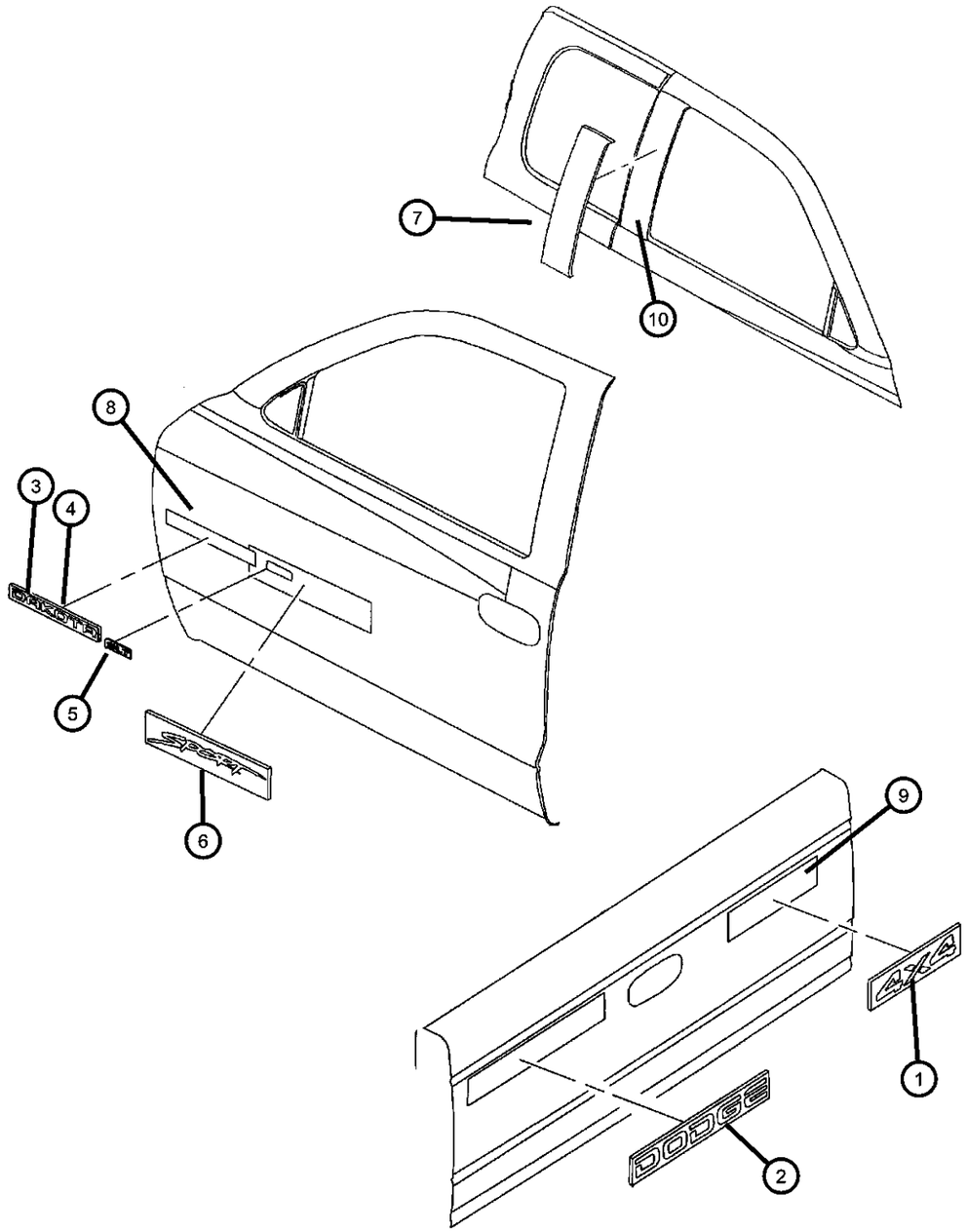

ITEM	PART NUMBER	QTY	LINE	SERIES	BODY	ENGINE	TRANS	TRIM	DESCRIPTION
	5EW59PCH	1							Blue
10	55077321AA	2			84				DIMENSIONAL GRAPHIC, Quad Cab

DAKOTA (AN)

SERIES	LINE	BODY	ENGINE	TRANSMISSION
L = Quad Cab L = Regular Cab L = Club Cab	1 = Dakota 2WD 5 = Dakota 4WD	31 = CLUB CAB 2-DR 6.5 FT BOX 61 = REG CAB 6.5 FT BOX 84 = CREW CAB 4-DR W.B.1	EPO = 2.5L 4 Cyl. EHO = 3.9L 6 Cyl. EMO = 5.9L 8 Cyl. EVO = 4.7L Magnum EHC = 3.9L SMPI V6 EML = 5.9L V8 MPI Engine EPE = 2.5L POWER TECH I-4 Cyl. EVA = 4.7L V8 MPI	DDC = TRANSMISSION - 5-SPEED HD MANUAL DG4 = TRANSMISSION-MULTI-SPEED AUTO, 45RFE DGK = TRANSMISSION - 4-SPD. AUTOMATIC,42RE DGT = TRANSMISSION - 4-SPD. AUTOMATIC,46RE DGO = AUTO. TRANS.

Group - IAN

Interior Trim

IAN-100
Headliner and Visor

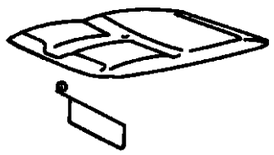

IAN-200
Moldings, Scuff Plates

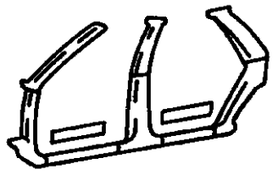

IAN-300
Carpet

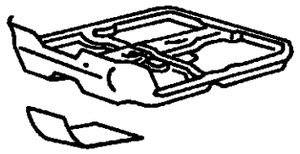

IAN-400
Door Trim Panels-Front and Rear

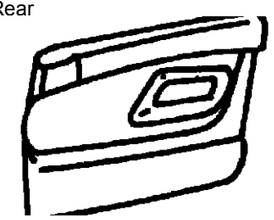

IAN-500
Front Seats and Attaching Parts

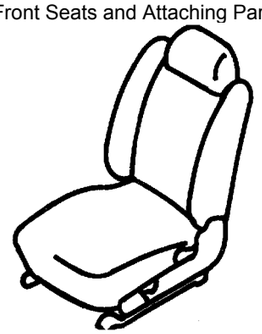

IAN-600
Rear Seats- Folding and Quad

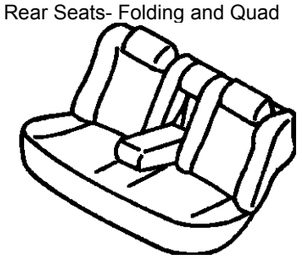

IAN-700
Seat Belts-Front and Rear

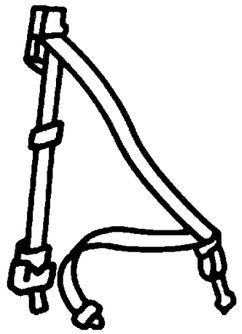

IAN-800
Adjusters, Covers, Shields, and Risers

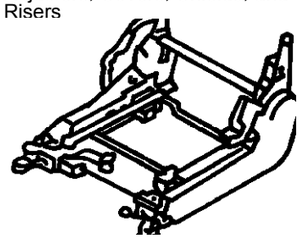

Group - IAN Interior Trim

Illustration Title — Group-Fig. No.

Headliner and Visor
Headliner And Visor ..... Fig. IAN - 110

Moldings, Scuff Plates
A-Pillar, Scuff Plates, Grab Handles, Cab Back ..... Fig. IAN - 210
B-Pillars and C -Pillars ..... Fig. IAN - 220

Carpet
Carpet ..... Fig. IAN - 310
Silencers ..... Fig. IAN - 320

Door Trim Panels-Front and Rear
Front Door Trim Panels ..... Fig. IAN - 410
Rear Door Trim Panels ..... Fig. IAN - 420

Front Seats and Attaching Parts
Seat Front, Full Bench, Trim Codes A2, G1 Standard Cab ..... Fig. IAN - 510
Seat Front, Split Bench, Trim Code P9 ..... Fig. IAN - 520
Seat, Front, Bucket Seats,Trim Code K5 ..... Fig. IAN - 530
Seat, Front Bucket, Trim Code [LJ] ..... Fig. IAN - 540

Rear Seats- Folding and Quad
Rear Seat And Attaching Parts Trim Code P9, K5 ..... Fig. IAN - 610
Rear Seat, Quad Cab ..... Fig. IAN - 620

Seat Belts-Front and Rear
Belts, Front Seat, Standard & Club Cabs ..... Fig. IAN - 710
Belts, Front Seat, 4 Door ..... Fig. IAN - 715
Belts, Rear Seat and Tethers ..... Fig. IAN - 720

Adjusters, Covers, Shields, and Risers
Adjuster And Attaching Parts ..... Fig. IAN - 810
Handles, Lock Bar And Attaching Parts ..... Fig. IAN - 820

Headliner And Visor
Figure IAN-110

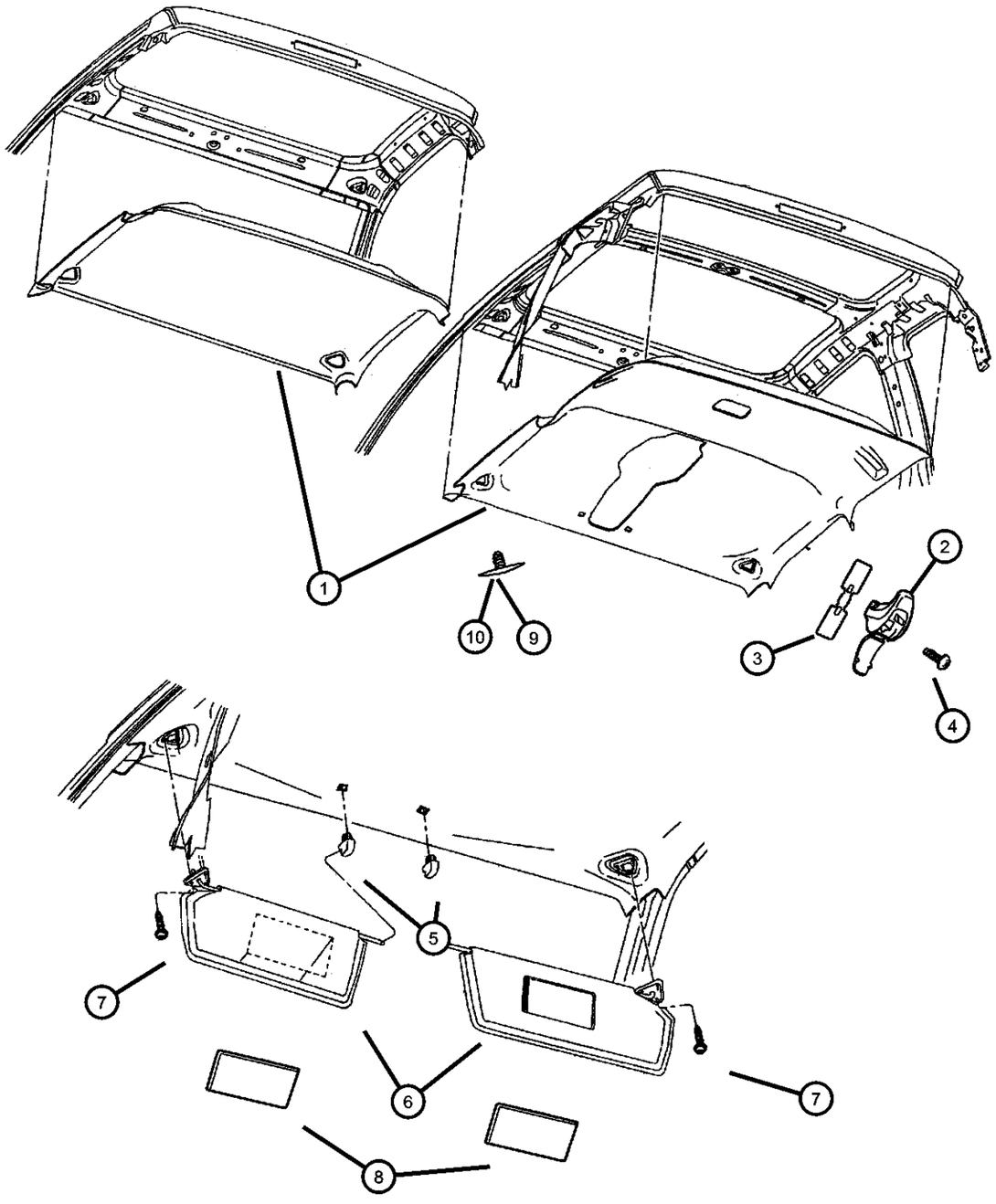

ITEM	PART NUMBER	QTY	LINE	SERIES	BODY	ENGINE	TRANS	TRIM	DESCRIPTION
Note: Refer to [TSB] 23-42-99 for installing push pins.									
1									HEADLINER
	5GD36TL2AA	1			84			*O0	
	5GH56TL2AA	1			61, 62			*O0	Without Overhead Console
	5GH67TL2AA	1			61, 62			*O0	With Overhead Console
	5GH78TL2AA	1			31			*O0	Without Overhead Console
	5GH89TL2AA	1			31			*O0	With Overhead Console
2									HOOK, Coat
	5GU22TL2AA	2			61, 62			*O0	
		2			31			*O0	
3									CLIP, Pinch Top
	04647896	2			61			*O0	
		2			31			*O0	
4									SCREW, .164-18x.75
	06035324	2			61			*O0	
		2			31			*O0	
5	5GE11TL2AA	2						*O0	SUPPORT, Visor
6									VISOR, W/Mirror
	5GE12TL2AA	1						*O0	Right
	5GE13TL2AA	1						*O0	Without Mirror, Left
7	00152438	4							SCREW, Oval Head, .19-16x.75
8									LABEL, Air Bag Warning
	04787437AA	2			84				CANADA
	55350848AA	2			31, 61				CANADA
9	0QL77TL2	2			84			*O0	FASTENER, Headliner
10	06506624AA	2			31				PUSH PIN

DAKOTA (AN)

SERIES	LINE	BODY	ENGINE	TRANSMISSION
L = Quad Cab L = Regular Cab L = Club Cab	1 = Dakota 2WD 5 = Dakota 4WD	31 = CLUB CAB 2-DR 6.5 FT BOX 61 = REG CAB 6.5 FT BOX 84 = CREW CAB 4-DR W.B.1	EPO = 2.5L 4 Cyl. EHO = 3.9L 6 Cyl. EMO = 5.9L 8 Cyl. EVO = 4.7L Magnum EHC = 3.9L SMPI V6 EML = 5.9L V8 MPI Engine EPE = 2.5L POWER TECH I-4 Cyl. EVA = 4.7L V8 MPI	DDC = TRANSMISSION - 5-SPEED HD MANUAL DG4 = TRANSMISSION-MULTI-SPEED AUTO, 45RFE DGK = TRANSMISSION - 4-SPD. AUTOMATIC,42RE DGT = TRANSMISSION - 4-SPD. AUTOMATIC,46RE DGO = AUTO. TRANS.

A-Pillar, Scuff Plates, Grab Handles, Cab Back
Figure IAN-210

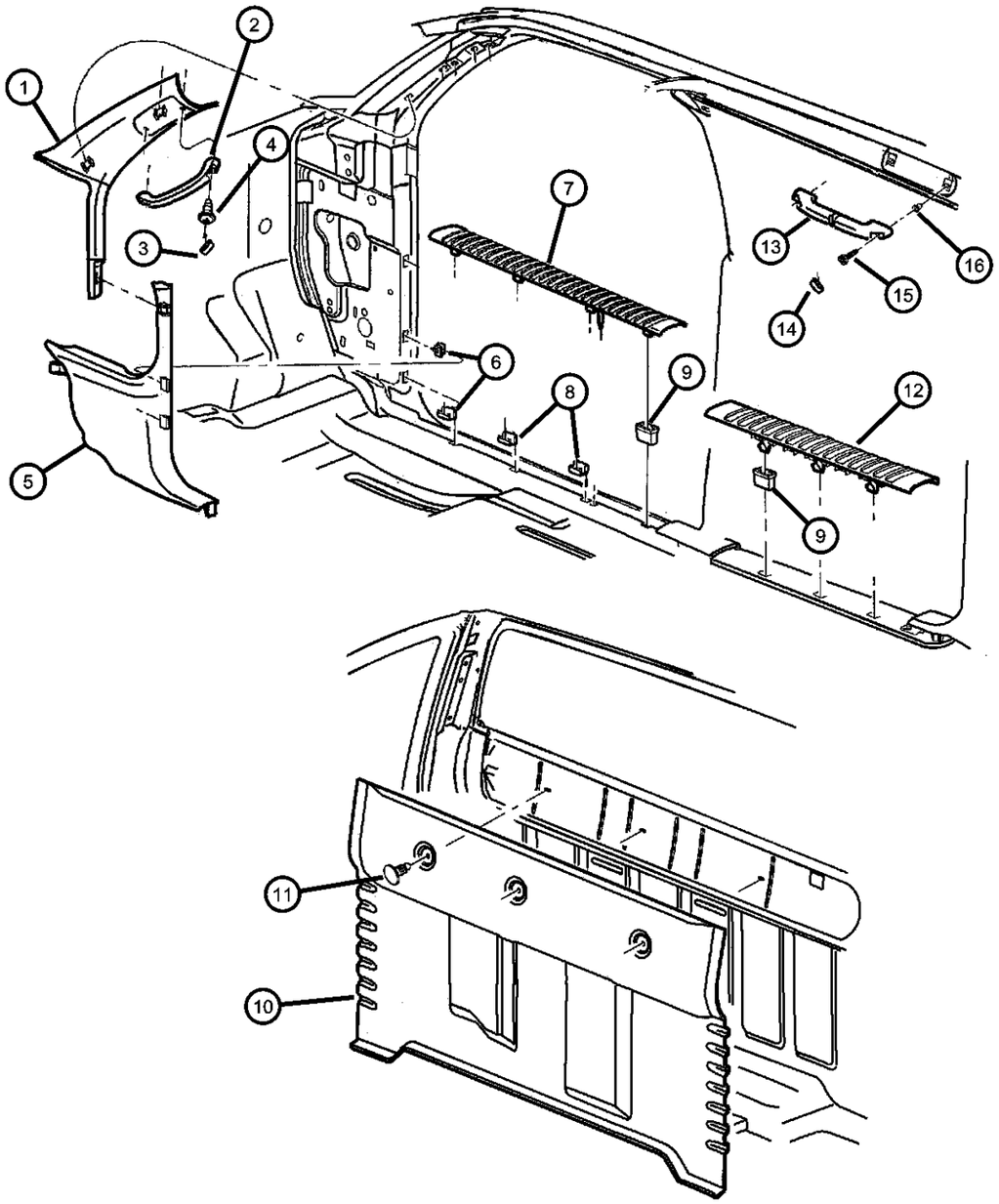

ITEM	PART NUMBER	QTY	LINE	SERIES	BODY	ENGINE	TRANS	TRIM	DESCRIPTION
1									MOLDING, A-PILLAR
	5GC74LAZAA	1						*O0	[AZ], Right
	5GC74RC3AA	1						*O0	[C3], Right
	5GC79LAZAA	1						*O0	[AZ], Left
	5GC79RC3AA	1						*O0	[C3], Left
2									HANDLE, Roof Grab
	5GU40LAZAA	1						*O0	[AZ], A - Pillar
	5GU40RC3AA	1						*O0	[C3], A - Pillar
3									PLUG, Assist and Grab Handle
	0H526TAZ	2						*O0	[AZ]
	0H526TC3	2						*O0	[C3]
4	06504432	4							SCREW, Pan Head, M6-1.00x29.00
5									PANEL, Cowl Side Trim
	5GL82LAZAA	1						*O0	[AZ], Right
	5GL82RC3AA	1						*O0	[C3], Right
	5GL83LAZAA	1						*O0	[AZ], Left
	5GL83RC3AA	1						*O0	[C3], Left
6	55361001AA	4							CLIP, Trim Panel
7									PLATE, Scuff
	5FH12LAZAB	2			84			*O0	[AZ], Right & Left
	5FH12RC3AB	2			84			*O0	[C3], Right & Left
	5GH18LAZAA	1			31, 61, 62			*O0	[AZ], Right
	5GH18RC3AA	1			31, 61, 62			*O0	[C3], Right
	5GH19LAZAA	1			31, 61, 62			*O0	[AZ], Left
	5GH19RC3AA	1			31, 61, 62			*O0	[C3], Left
8	55361001AB	4							CLIP, Trim Panel
9	06505621AA	14			84				NUT, Push In
10									CARPET, Cab Back Panel
	5GD19LAZAA	1			84			*O0	[AZ]
	5GD19RC8AA	1			84			*O0	[C3]
	5GT33LAZAB	1			61			*O0	[AZ]
	5GT33RC8AB	1			61			*O0	[C3]

DAKOTA (AN)

SERIES	LINE	BODY	ENGINE	TRANSMISSION
L = Quad Cab L = Regular Cab L = Club Cab	1 = Dakota 2WD 5 = Dakota 4WD	31 = CLUB CAB 2-DR 6.5 FT BOX 61 = REG CAB 6.5 FT BOX 84 = CREW CAB 4-DR W.B.1	EPO = 2.5L 4 Cyl. EHO = 3.9L 6 Cyl. EMO = 5.9L 8 Cyl. EVO = 4.7L Magnum EHC = 3.9L SMPI V6 EML = 5.9L V8 MPI Engine EPE = 2.5L POWER TECH I-4 Cyl. EVA = 4.7L V8 MPI	DDC = TRANSMISSION - 5-SPEED HD MANUAL DG4 = TRANSMISSION-MULTI-SPEED AUTO, 45RFE DGK = TRANSMISSION - 4-SPD. AUTOMATIC,42RE DGT = TRANSMISSION - 4-SPD. AUTOMATIC,46RE DGO = AUTO. TRANS.

A-Pillar, Scuff Plates, Grab Handles, Cab Back
Figure IAN-210

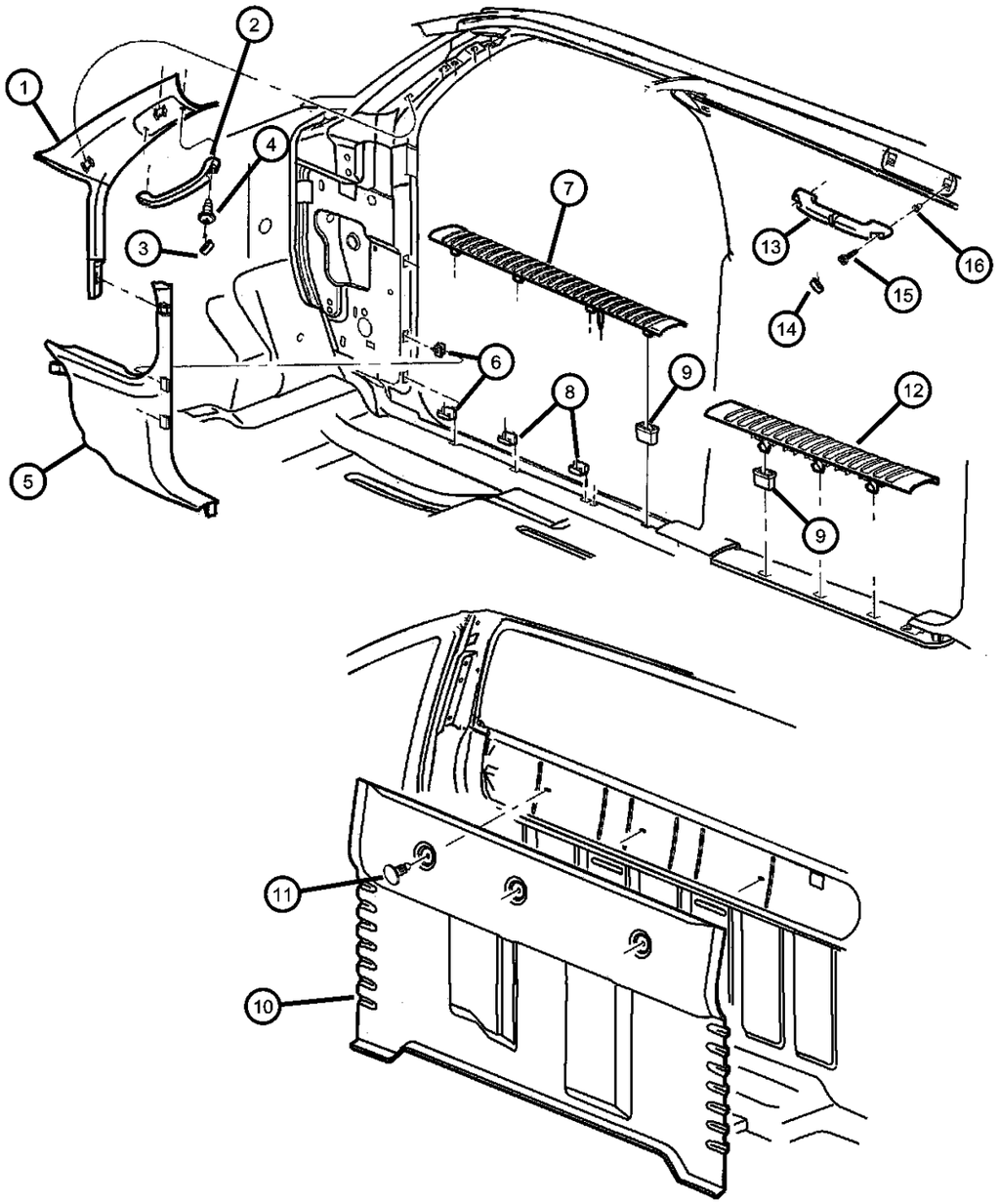

ITEM	PART NUMBER	QTY	LINE	SERIES	BODY	ENGINE	TRANS	TRIM	DESCRIPTION
11									FASTENER, Trim Panel Attaching
	5GW34LAZAA	3			61, 62			*O0	[AZ]
	5GW34RC8AA	3			61, 62			*O0	[C3]
12									PLATE, Scuff
	5GC80LAZAA	2			84			*O0	[AZ], Rear, Right And Left
	5GC80RC3AA	2			84			*O0	[C3], Rear, Right And Left
13	5GN70TL2AB	2			84			*O0	HANDLE, Roof Grab
14	0H526TL2	4			84			*O0	PLUG, Assist and Grab Handle
15	06504432	4			84				SCREW, Pan Head, M6-1.00x29.00
16	06503910	2							NUT

DAKOTA (AN)

SERIES	LINE	BODY	ENGINE	TRANSMISSION
L = Quad Cab	1 = Dakota 2WD	31 = CLUB CAB 2-DR 6.5 FT BOX	EPO = 2.5L 4 Cyl.	DDC = TRANSMISSION - 5-SPEED HD MANUAL
L = Regular Cab	5 = Dakota 4WD	61 = REG CAB 6.5 FT BOX	EHO = 3.9L 6 Cyl.	DG4 = TRANSMISSION-MULTI-SPEED AUTO, 45RFE
L = Club Cab		84 = CREW CAB 4-DR W.B.1	EMO = 5.9L 8 Cyl.	DGK = TRANSMISSION - 4-SPD. AUTOMATIC,42RE
			EVO = 4.7L Magnum	DGT = TRANSMISSION - 4-SPD. AUTOMATIC,46RE
			EHC = 3.9L SMPI V6	DGO = AUTO. TRANS.
			EML = 5.9L V8 MPI Engine	
			EPE = 2.5L POWER TECH I-4 Cyl.	
			EVA = 4.7L V8 MPI	

B-Pillars and C -Pillars
Figure IAN-220

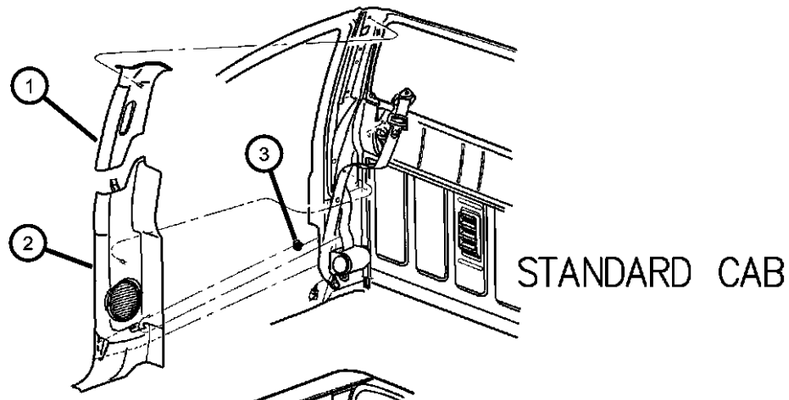

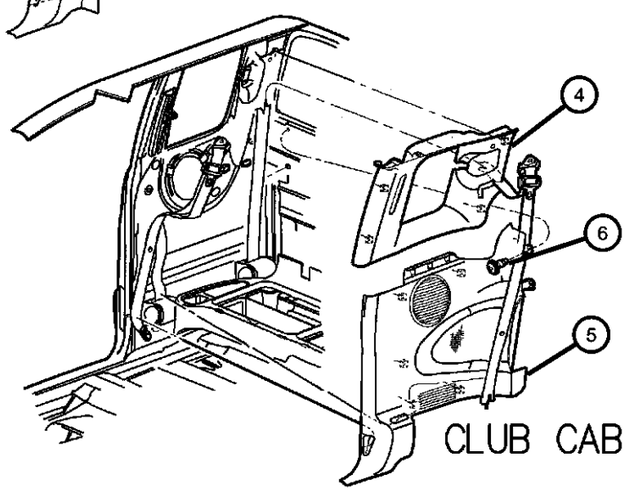

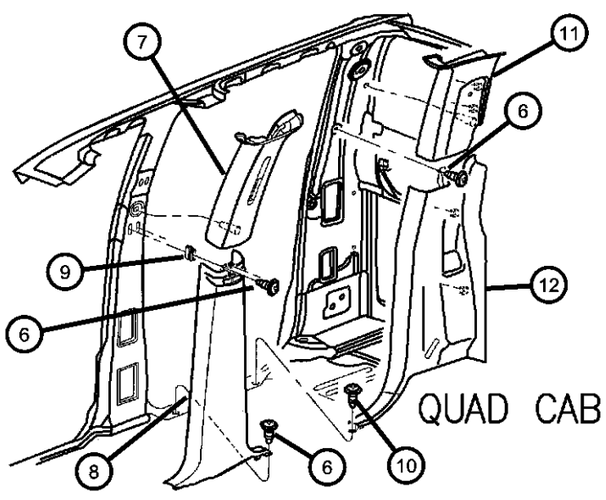

ITEM	PART NUMBER	QTY	LINE	SERIES	BODY	ENGINE	TRANS	TRIM	DESCRIPTION
1									PANEL, B Pillar Upper Trim
	5GJ12LAZAA	1			61, 62			*O0	[AZ], Right
	5GJ12RC3AA	1			61, 62			*O0	[C3], Right
	5GJ13LAZAA	1			61, 62			*O0	[AZ], Left
	5GJ13RC3AA	1			61, 62			*O0	[C3], Left
2									PANEL, B Pillar Lower Trim
	5GH42LAZAB	1			61			*O0	[AZ], Right
	5GH42RC3AB	1			61			*O0	[C3], Right
	5GH43LAZAB	1			61			*O0	[AZ], Left
	5GH43RC3AB	1			61			*O0	[C3], Left
3	55350789AA	2			61				CLIP, Trim
4									PANEL, Quarter Trim
	5GH44LAZAA	1			31			*O0	[AZ], Right, Upper
	5GH44RC3AA	1			31			*O0	[C3], Right, Upper
	5GH45LAZAA	1			31			*O0	[AZ], Left, Upper
	5GH45RC3AA	1			31			*O0	[C3], Left, Upper
5									PANEL, Quarter Trim
	5GH46LAZAA	1			31			*O0	[AZ], Right, Lower
	5GH46RC3AA	1			31			*O0	[C3], Right, Lower
	5GH47LAZAA	1			31			*O0	[AZ], Left, Lower
	5GH47RC3AA	1			31			*O0	[C3], Left, Lower
6									SCREW, Pan Head, .164-18x.50
	00154657	4			31				
		4			84				
7									PANEL, B Pillar Upper Trim
	5GC86LAZAA	1			84			*O0	[AZ], Right
	5GC86RC3AA	1			84			*O0	[C3], Right
	5GC87LAZAA	1			84			*O0	[AZ], Left
	5GC87RC3AA	1			84			*O0	[C3], Left
8									PANEL, B Pillar
	5GS38LAZAA	1			84			*O0	[AZ], Right, Lower
	5GS38RC3AA	1			84			*O0	[C3], Right, Lower

DAKOTA (AN)

SERIES	LINE	BODY	ENGINE	TRANSMISSION
L = Quad Cab L = Regular Cab L = Club Cab	1 = Dakota 2WD 5 = Dakota 4WD	31 = CLUB CAB 2-DR 6.5 FT BOX 61 = REG CAB 6.5 FT BOX 84 = CREW CAB 4-DR W.B.1	EPO = 2.5L 4 Cyl. EHO = 3.9L 6 Cyl. EMO = 5.9L 8 Cyl. EVO = 4.7L Magnum EHC = 3.9L SMPI V6 EML = 5.9L V8 MPI Engine EPE = 2.5L POWER TECH I-4 Cyl. EVA = 4.7L V8 MPI	DDC = TRANSMISSION - 5-SPEED HD MANUAL DG4 = TRANSMISSION-MULTI-SPEED AUTO, 45RFE DGK = TRANSMISSION - 4-SPD. AUTOMATIC,42RE DGT = TRANSMISSION - 4-SPD. AUTOMATIC,46RE DGO = AUTO. TRANS.

B-Pillars and C -Pillars
Figure IAN-220

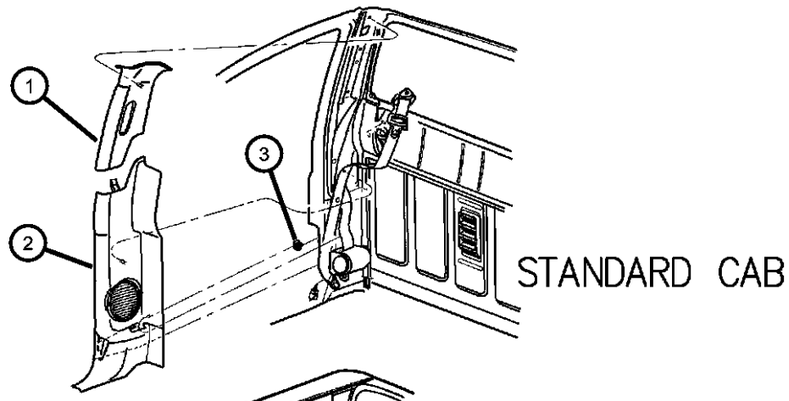

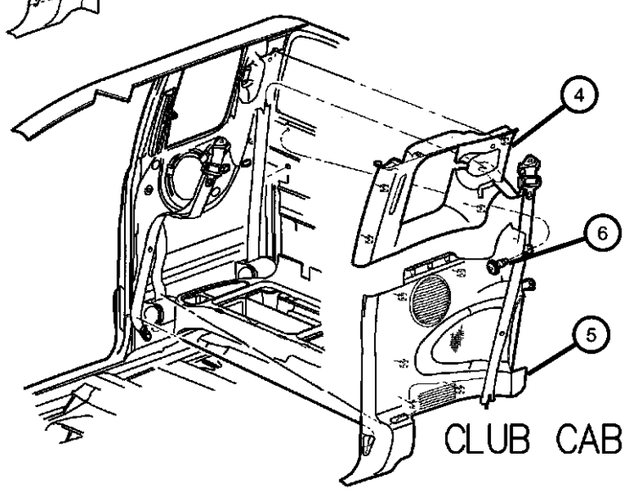

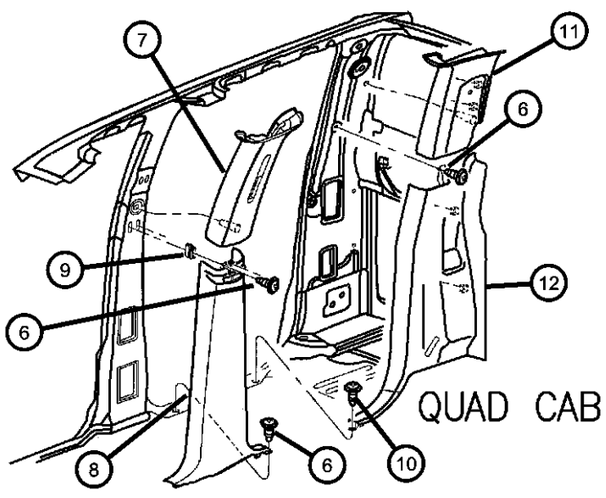

ITEM	PART NUMBER	QTY	LINE	SERIES	BODY	ENGINE	TRANS	TRIM	DESCRIPTION
	5GS39LAZAA	1			84			*O0	[AZ], Left, Lower
	5GS39RC3AA	1			84			*O0	[C3], Left, Lower
9	06505135AA	2			84				NUT, Push In
10	J4004642	4			84				SCREW, Round Head, .164-18x.560
11									PANEL, C Pillar
	5GC90LAZAB	1			84			*O0	[AZ], Right, Upper
	5GC90RC3AB	1			84			*O0	[C3], Right, Upper
	5GC91LAZAB	1			84			*O0	[AZ], Left, Upper
	5GC91RC3AB	1			84			*O0	[C3], Left, Upper
12									PANEL, C Pillar
	5GC92LAZAB	1			84			*O0	[AZ], Right, Lower
	5GC92RC3AB	1			84			*O0	[C3], Right, Lower
	5GC93LAZAB	1			84			*O0	[AZ], Left, Lower
	5GC93RC3AB	1			84			*O0	[C3], Left, Lower

DAKOTA (AN)

SERIES	LINE	BODY	ENGINE	TRANSMISSION
L = Quad Cab	1 = Dakota 2WD	31 = CLUB CAB 2-DR 6.5 FT BOX	EPO = 2.5L 4 Cyl.	DDC = TRANSMISSION - 5-SPEED HD MANUAL
L = Regular Cab	5 = Dakota 4WD	61 = REG CAB 6.5 FT BOX	EHO = 3.9L 6 Cyl.	DG4 = TRANSMISSION-MULTI-SPEED AUTO, 45RFE
L = Club Cab		84 = CREW CAB 4-DR W.B.1	EMO = 5.9L 8 Cyl.	DGK = TRANSMISSION - 4-SPD. AUTOMATIC,42RE
			EVO = 4.7L Magnum	DGT = TRANSMISSION - 4-SPD. AUTOMATIC,46RE
			EHC = 3.9L SMPI V6	DGO = AUTO. TRANS.
			EML = 5.9L V8 MPI Engine	
			EPE = 2.5L POWER TECH I-4 Cyl.	
			EVA = 4.7L V8 MPI	

Carpet
Figure IAN-310

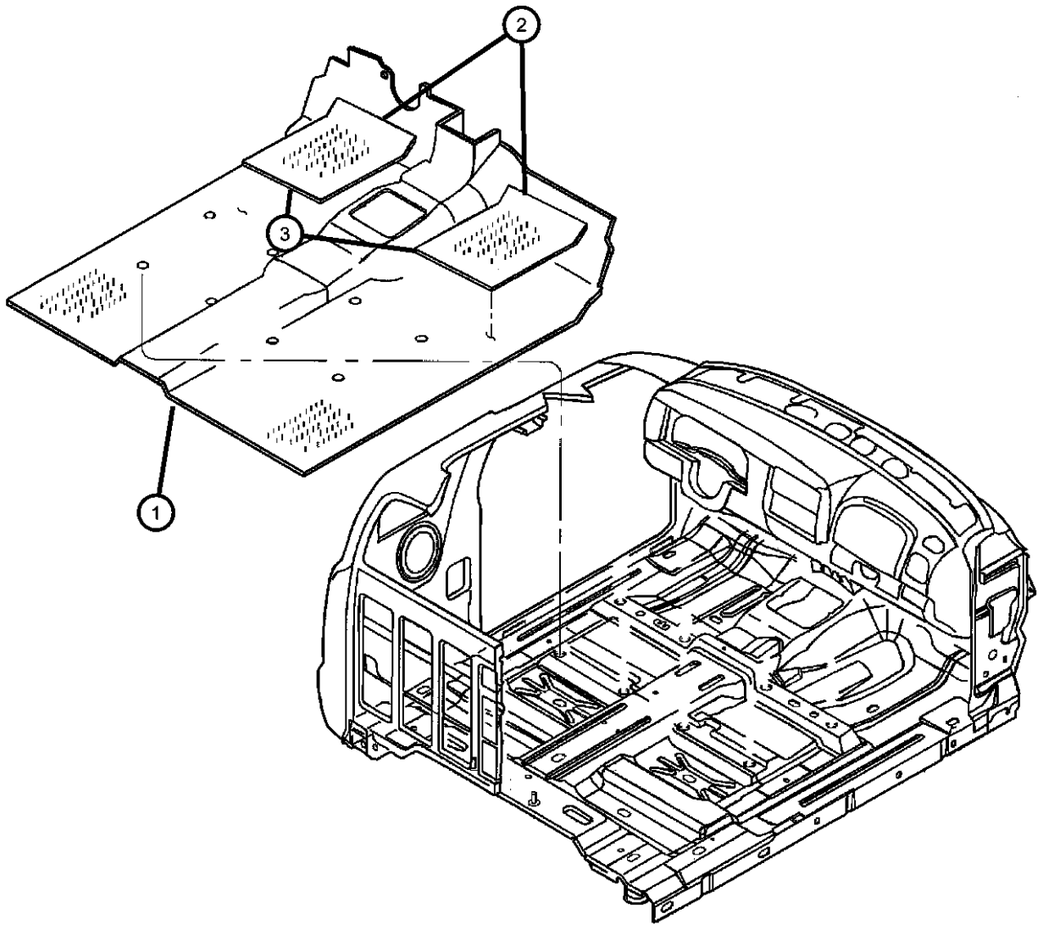

ITEM	PART NUMBER	QTY	LINE	SERIES	BODY	ENGINE	TRANS	TRIM	DESCRIPTION
1									CARPET, Floor
	5GD31LAZAB	1			84			*O0	[AZ]
	5GD31RC8AB	1			84			*O0	[C3]
	5GL73LAZAB	1			61			*O0	[AZ]
	5GL73RC8AB	1			61			*O0	[C3]
	5GL92LAZAB	1			31			*O0	[AZ]
	5GL92RC8AB	1			31			*O0	[C3]
2	5GV00DX9AB	1			61			*O0	MAT, Floor, Black Vinyl
3									MAT KIT, Floor - Front
	5GC31LAZAA	1			31, 61			*O0	[AZ]
	5GC31RC8AA	1			31, 61			*O0	[C3]

DAKOTA (AN)

SERIES	LINE	BODY	ENGINE	TRANSMISSION
L = Quad Cab	1 = Dakota 2WD	31 = CLUB CAB 2-DR 6.5 FT BOX	EPO = 2.5L 4 Cyl.	DDC = TRANSMISSION - 5-SPEED HD MANUAL
L = Regular Cab	5 = Dakota 4WD	61 = REG CAB 6.5 FT BOX	EHO = 3.9L 6 Cyl.	DG4 = TRANSMISSION-MULTI-SPEED AUTO, 45RFE
L = Club Cab		84 = CREW CAB 4-DR W.B.1	EMO = 5.9L 8 Cyl.	DGK = TRANSMISSION - 4-SPD. AUTOMATIC,42RE
			EVO = 4.7L Magnum	DGT = TRANSMISSION - 4-SPD. AUTOMATIC,46RE
			EHC = 3.9L SMPI V6	DGO = AUTO. TRANS.
			EML = 5.9L V8 MPI Engine	
			EPE = 2.5L POWER TECH I-4 Cyl.	
			EVA = 4.7L V8 MPI	

Silencers
Figure IAN-320

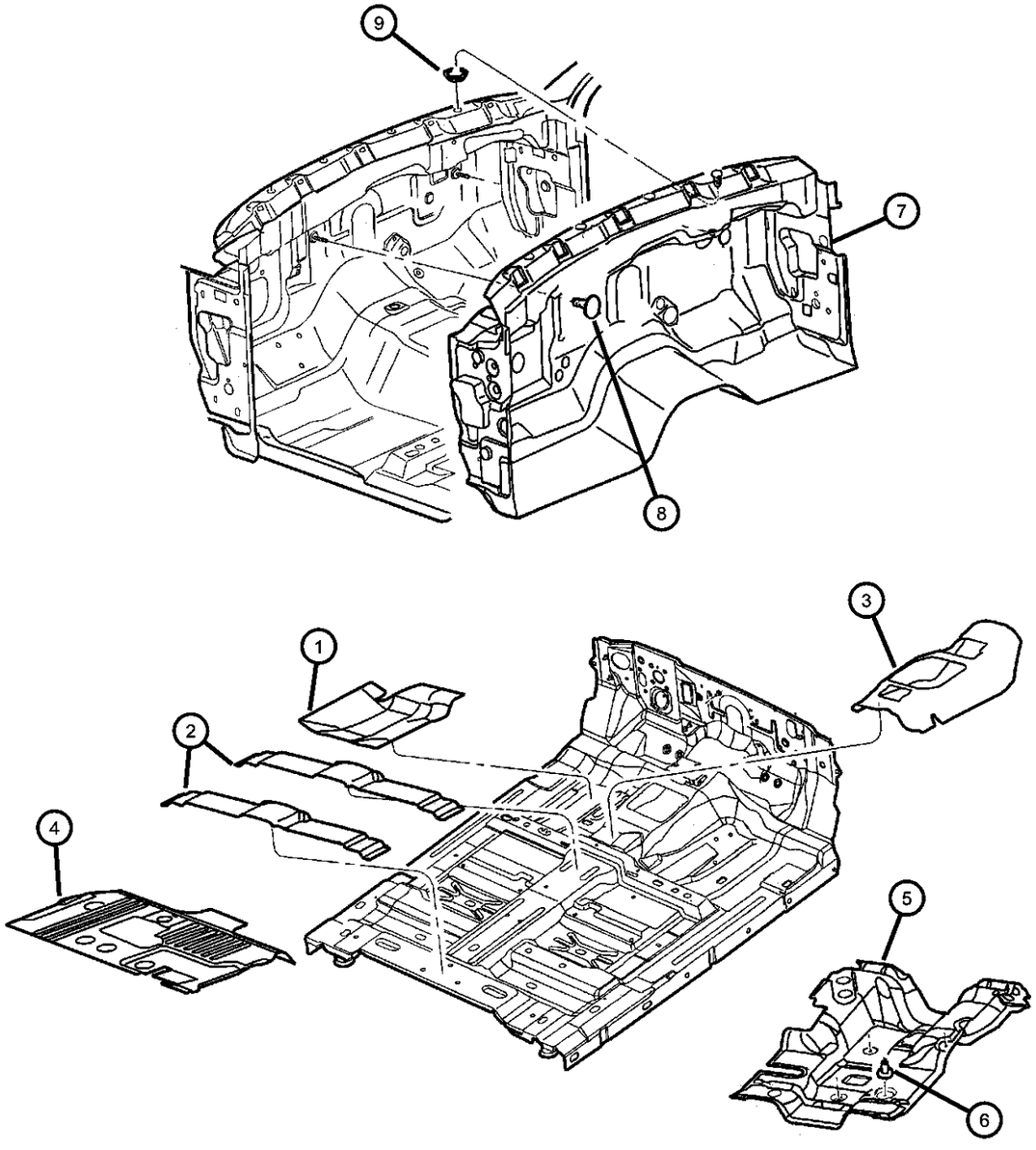

ITEM	PART NUMBER	QTY	LINE	SERIES	BODY	ENGINE	TRANS	TRIM	DESCRIPTION
Sales Code [EVA] = Next Generation 4.7L Magnum V8									
1	55361064AA	2							SILENCER, Floor Pan Front TunnelRight And Left
2	55255328AB	1							SILENCER, Floor Pan
3	55255327AB	1							SILENCER, Floor Pan Front Tunnel
4	55350842AA	1			84				SILENCER, Floor Pan Front Tunnel
5	55361006AC	1							SILENCER, Floor Pan Front Tunnel, With Sales Code [EVA]
6	06506099AA	6							NUT, Push-On Spring, 3
7	06506099AA	6							SILENCER, Dash Panel, (NOT SERVICED)
8	06503274	3							NUT, Push On
9	56021909AA	4							GROMMET, Body Wiring

DAKOTA (AN)

SERIES	LINE	BODY	ENGINE	TRANSMISSION
L = Quad Cab	1 = Dakota 2WD	31 = CLUB CAB 2-DR 6.5 FT BOX	EPO = 2.5L 4 Cyl.	DDC = TRANSMISSION - 5-SPEED HD MANUAL
L = Regular Cab	5 = Dakota 4WD	61 = REG CAB 6.5 FT BOX	EHO = 3.9L 6 Cyl.	DG4 = TRANSMISSION-MULTI-SPEED AUTO, 45RFE
L = Club Cab		84 = CREW CAB 4-DR W.B.1	EMO = 5.9L 8 Cyl.	DGK = TRANSMISSION - 4-SPD. AUTOMATIC,42RE
			EVO = 4.7L Magnum	DGT = TRANSMISSION - 4-SPD. AUTOMATIC,46RE
			EHC = 3.9L SMPI V6	DGO = AUTO. TRANS.
			EML = 5.9L V8 MPI Engine	
			EPE = 2.5L POWER TECH I-4 Cyl.	
			EVA = 4.7L V8 MPI	

Front Door Trim Panels
Figure IAN-410

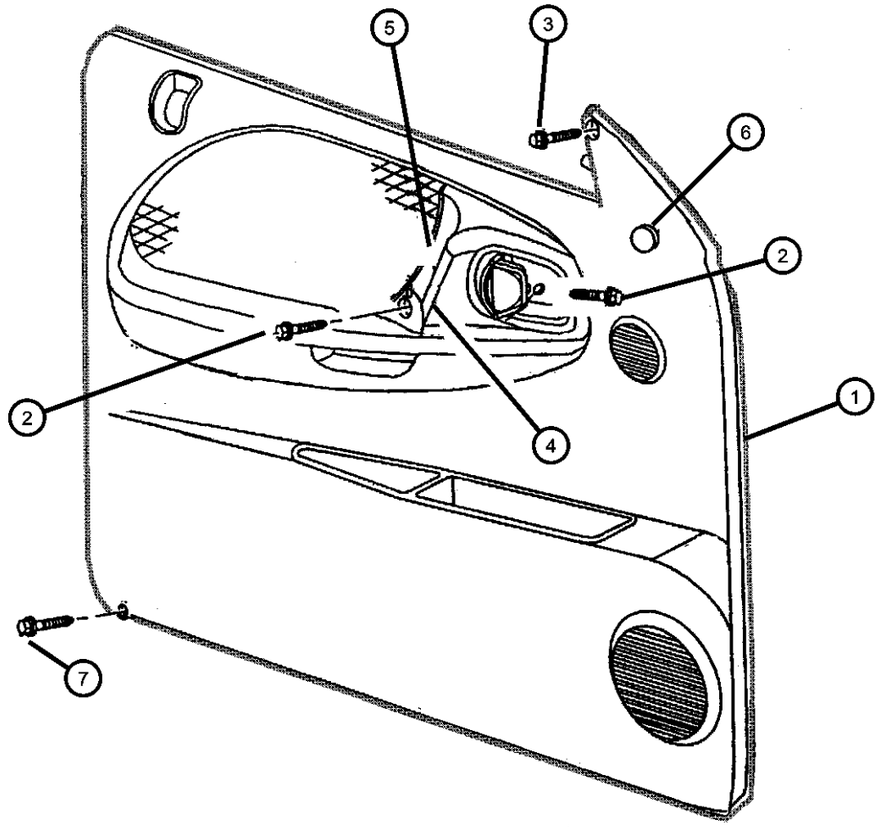

ITEM	PART NUMBER	QTY	LINE	SERIES	BODY	ENGINE	TRANS	TRIM	DESCRIPTION
Cut hole for manual handle.									
Sales Code [RCK] = Speakers- 8 Infinity in 6 Locations.									
1									PANEL, Front Door Trim
	0TH001AZAA	1			31, 61			*P9	[AZ], With Infinity, Sales Code [RCK], Right
		1			31, 61			*K5	[AZ], With Infinity, Sales Code [RCK], Right
	0TH001C3AA	1			31, 61			*P9	[C3], With Infinity, Sales Code [RCK], Right
		1			31, 61			*K5	[C3], With Infinity, Sales Code [RCK], Right
	0TH011AZAA	1			31, 61			*P9	[AZ], With Infinity, Sales Code [RCK], Left
		1			31, 61			*K5	[AZ], With Infinity, Sales Code [RCK], Left
	0TH011C3AA	1			31, 61			*P9	[C3], With Infinity, Sales Code [RCK], Left
		1			31, 61			*K5	[C3], With Infinity, Sales Code [RCK], Left
	0TH041AZAA	1			31, 61			*P9	[AZ], Without Infinity, Sales Code [RCK], Right
		1			31, 61			*K5	[AZ], Without Infinity, Sales Code [RCK], Right
	0TH041C3AA	1			31, 61			*P9	[C3], Without Infinity, Sales Code [RCK], Right
		1			31, 61			*K5	[C3], Without Infinity, Sales Code [RCK], Right
	0TH051AZAA	1			31, 61			*P9	[AZ], Without Infinity, Sales Code [RCK], Left
		1			31, 61			*K5	[AZ], Without Infinity, Sales Code [RCK], Left
	0TH051C3AA	1			31, 61			*P9	[C3], Without Infinity, Sales Code [RCK], Left
		1			31, 61			*K5	[C3], Without Infinity, Sales Code [RCK], Left
	0TH221AZAA	1			84			*K5	[AZ], With Infinity, Sales Code [RCK], Right
		1			84			*P9	[AZ], With Infinity, Sales Code [RCK], Right
	0TH221C3AA	1			84			*K5	[C3], With Infinity, Sales Code [RCK], Right
		1			84			*P9	[C3], With Infinity, Sales Code [RCK], Right

DAKOTA (AN)

SERIES	LINE	BODY	ENGINE	TRANSMISSION
L = Quad Cab L = Regular Cab L = Club Cab	1 = Dakota 2WD 5 = Dakota 4WD	31 = CLUB CAB 2-DR 6.5 FT BOX 61 = REG CAB 6.5 FT BOX 84 = CREW CAB 4-DR W.B.1	EPO = 2.5L 4 Cyl. EHO = 3.9L 6 Cyl. EMO = 5.9L 8 Cyl. EVO = 4.7L Magnum EHC = 3.9L SMPI V6 EML = 5.9L V8 MPI Engine EPE = 2.5L POWER TECH I-4 Cyl. EVA = 4.7L V8 MPI	DDC = TRANSMISSION - 5-SPEED HD MANUAL DG4 = TRANSMISSION-MULTI-SPEED AUTO, 45RFE DGK = TRANSMISSION - 4-SPD. AUTOMATIC,42RE DGT = TRANSMISSION - 4-SPD. AUTOMATIC,46RE DGO = AUTO. TRANS.

Front Door Trim Panels
Figure IAN-410

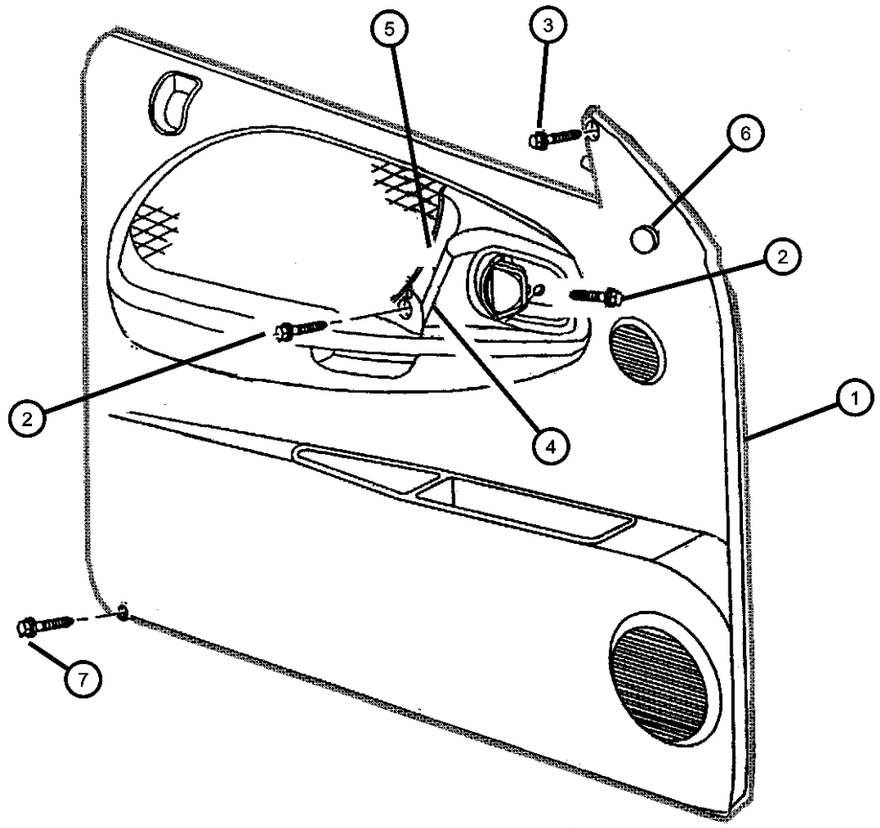

ITEM	PART NUMBER	QTY	LINE	SERIES	BODY	ENGINE	TRANS	TRIM	DESCRIPTION
	0TH231AZAA	1			84			*K5	[AZ], With Infinity, Sales Code [RCK], Left
		1			84			*P9	[AZ], With Infinity, Sales Code [RCK], Left
	0TH231C3AA	1			84			*K5	[C3], With Infinity, Sales Code [RCK], Left
		1			84			*P9	[C3], With Infinity, Sales Code [RCK], Left
	0TH241AZAA	1			84			*K5	[AZ], Without Infinity, Sales Code [RCK], Right
		1			84			*P9	[AZ], Without Infinity, Sales Code [RCK], Right
	0TH241C3AA	1			84			*K5	[C3], Without Infinity, Sales Code [RCK], Right
		1			84			*P9	[C3], Without Infinity, Sales Code [RCK], Right
	0TH251AZAA	1			84			*K5	[AZ], Without Infinity, Sales Code [RCK], Left
		1			84			*P9	[AZ], Without Infinity, Sales Code [RCK], Left
	0TH251C3AA	1			84			*K5	[C3], Without Infinity, Sales Code [RCK], Left
		1			84			*P9	[C3], Without Infinity, Sales Code [RCK], Left
	5EH081C3AD	1			31, 61			*A2	[C3], Base Hard Plastic, Right
		1			31, 61			*P9	[C3], Base Hard Plastic, Right
		1			31, 61			*G1	[C3], Base Hard Plastic, Right
	5EH091C3AD	1			31, 61			*A2	[C3], Base Hard Plastic, Left
		1			31, 61			*P9	[C3], Base Hard Plastic, Left
		1			31, 61			*G1	[C3], Base Hard Plastic, Left
2	06035372	2							SCREW, Pan Head Tapping, M6.3x1.8x22.23
3	06035372	2							SCREW, .164-15x1.250, (NOT SERVICED)
4									COVER, Front Door Switch
	0RA341AZAA	1			31, 61			*P9	[AZ], Right
		1			31, 61			*K5	[AZ], Right
	0RA341C3AA	1			31, 61			*P9	[C3], Right
		1			31, 61			*K5	[C3], Right

DAKOTA (AN)

SERIES	LINE	BODY	ENGINE	TRANSMISSION
L = Quad Cab L = Regular Cab L = Club Cab	1 = Dakota 2WD 5 = Dakota 4WD	31 = CLUB CAB 2-DR 6.5 FT BOX 61 = REG CAB 6.5 FT BOX 84 = CREW CAB 4-DR W.B.1	EPO = 2.5L 4 Cyl. EHO = 3.9L 6 Cyl. EMO = 5.9L 8 Cyl. EVO = 4.7L Magnum EHC = 3.9L SMPI V6 EML = 5.9L V8 MPI Engine EPE = 2.5L POWER TECH I-4 Cyl. EVA = 4.7L V8 MPI	DDC = TRANSMISSION - 5-SPEED HD MANUAL DG4 = TRANSMISSION-MULTI-SPEED AUTO, 45RFE DGK = TRANSMISSION - 4-SPD. AUTOMATIC,42RE DGT = TRANSMISSION - 4-SPD. AUTOMATIC,46RE DGO = AUTO. TRANS.

Front Door Trim Panels
Figure IAN-410

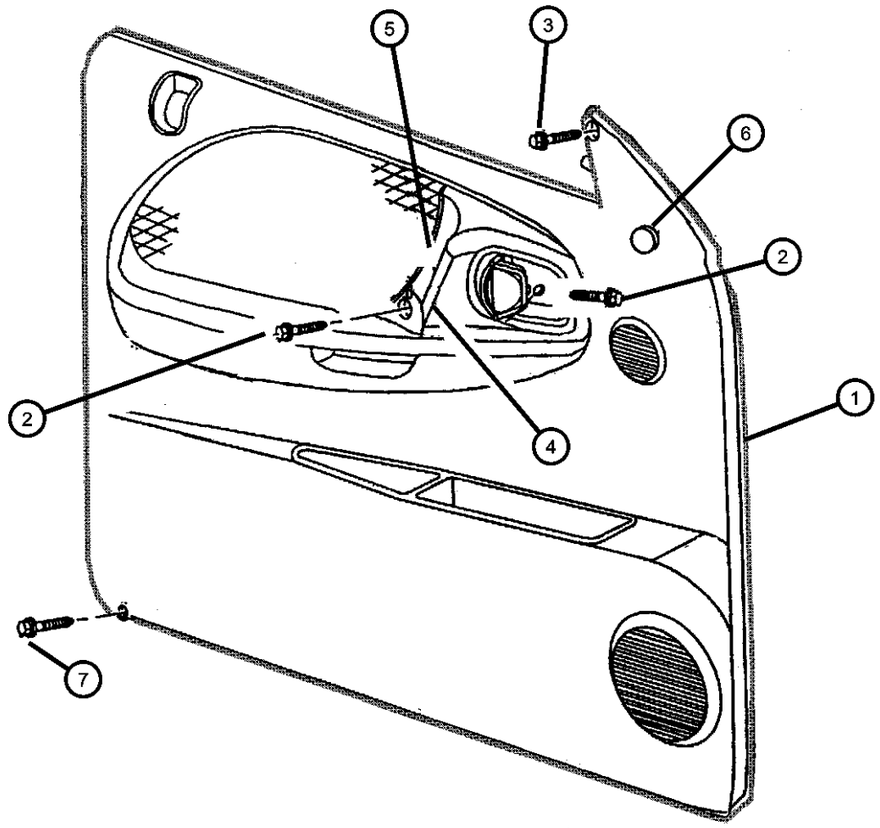

ITEM	PART NUMBER	QTY	LINE	SERIES	BODY	ENGINE	TRANS	TRIM	DESCRIPTION
	0RA351AZAA	1			31, 61			*P9	[AZ], Left
		1			31, 61			*K5	[AZ], Left
	0RA351C3AA	1			31, 61			*P9	[C3], Left
		1			31, 61			*K5	[C3], Left
5									BEZEL, Power Window/Door Lock Switch
	56020390AB	1			31, 61				2 Gang Power Switch
	56045302AA	1			31, 61				3 Gang Power Switch
	5GS21DX9AA	1			84			*K5	
		1			84			*P9	
6									PLUG, Mirror Switch
	0KM64TC3	1			31, 61			*P9	Paint As Required
		1			31, 61			*K5	Paint As Required
		1			84			*K5	Paint As Required
		1			84			*P9	Paint As Required
7		1							SCREW, .190-16 X .750, (NOT SERVICED),
-8									COVER, Switch Opening
	05016116AA	1			84			*K5	Right
		1			84			*P9	Right
	05016117AA	1			84			*K5	Left
		1			84			*P9	Left

DAKOTA (AN)

SERIES	LINE	BODY	ENGINE	TRANSMISSION
L = Quad Cab L = Regular Cab L = Club Cab	1 = Dakota 2WD 5 = Dakota 4WD	31 = CLUB CAB 2-DR 6.5 FT BOX 61 = REG CAB 6.5 FT BOX 84 = CREW CAB 4-DR W.B.1	EPO = 2.5L 4 Cyl. EHO = 3.9L 6 Cyl. EMO = 5.9L 8 Cyl. EVO = 4.7L Magnum EHC = 3.9L SMPI V6 EML = 5.9L V8 MPI Engine EPE = 2.5L POWER TECH I-4 Cyl. EVA = 4.7L V8 MPI	DDC = TRANSMISSION - 5-SPEED HD MANUAL DG4 = TRANSMISSION-MULTI-SPEED AUTO, 45RFE DGK = TRANSMISSION - 4-SPD. AUTOMATIC,42RE DGT = TRANSMISSION - 4-SPD. AUTOMATIC,46RE DGO = AUTO. TRANS.

Rear Door Trim Panels
Figure IAN-420

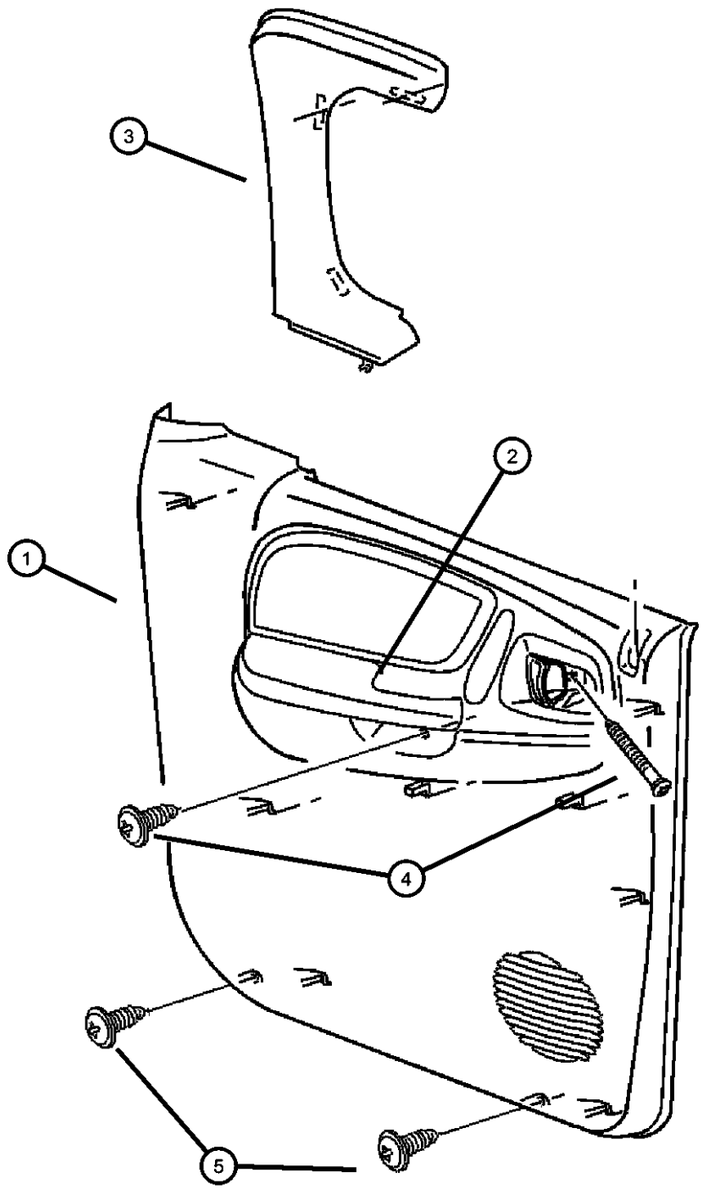

ITEM	PART NUMBER	QTY	LINE	SERIES	BODY	ENGINE	TRANS	TRIM	DESCRIPTION
1									PANEL, Rear Door Trim
	0TH401AZAA	1			84			*K5	[AZ], Right
		1			84			*P9	[AZ], Right
	0TH401C3AA	1			84			*K5	[C3], Right
		1			84			*P9	[C3], Right
	0TH411AZAA	1			84			*K5	[AZ], Left
		1			84			*P9	[AZ], Left
	0TH411C3AA	1			84			*K5	[C3], Left
		1			84			*P9	[C3], Left
2									COVER, Switch Opening
	05016116AA	1			84			*K5	Right
		1			84			*P9	Right
	05016117AA	1			84			*K5	Left
		1			84			*P9	Left
3									MOLDING, Rear Door
	5GH12LAZAC	1			84			*O0	[AZ], Right
	5GH12RC3AC	1			84			*O0	[C3], Right
	5GH13LAZAC	1			84			*O0	[AZ], Left
	5GH13RC3AC	1			84			*O0	[C3], Left
4	06035372	2			84				SCREW, Pan Head Tapping, M6.3x1.8x22.23
5	06035372	2							SCREW, .190-16 X .750, (NOT SERVICED)

DAKOTA (AN)

SERIES	LINE	BODY	ENGINE	TRANSMISSION
L = Quad Cab	1 = Dakota 2WD	31 = CLUB CAB 2-DR 6.5 FT BOX	EPO = 2.5L 4 Cyl.	DDC = TRANSMISSION - 5-SPEED HD MANUAL
L = Regular Cab	5 = Dakota 4WD	61 = REG CAB 6.5 FT BOX	EHO = 3.9L 6 Cyl.	DG4 = TRANSMISSION-MULTI-SPEED AUTO, 45RFE
L = Club Cab		84 = CREW CAB 4-DR W.B.1	EMO = 5.9L 8 Cyl.	DGK = TRANSMISSION - 4-SPD. AUTOMATIC,42RE
			EVO = 4.7L Magnum	DGT = TRANSMISSION - 4-SPD. AUTOMATIC,46RE
			EHC = 3.9L SMPI V6	DGO = AUTO. TRANS.
			EML = 5.9L V8 MPI Engine	
			EPE = 2.5L POWER TECH I-4 Cyl.	
			EVA = 4.7L V8 MPI	

Seat Front, Full Bench, Trim Codes A2, G1 Standard Cab
Figure IAN-510

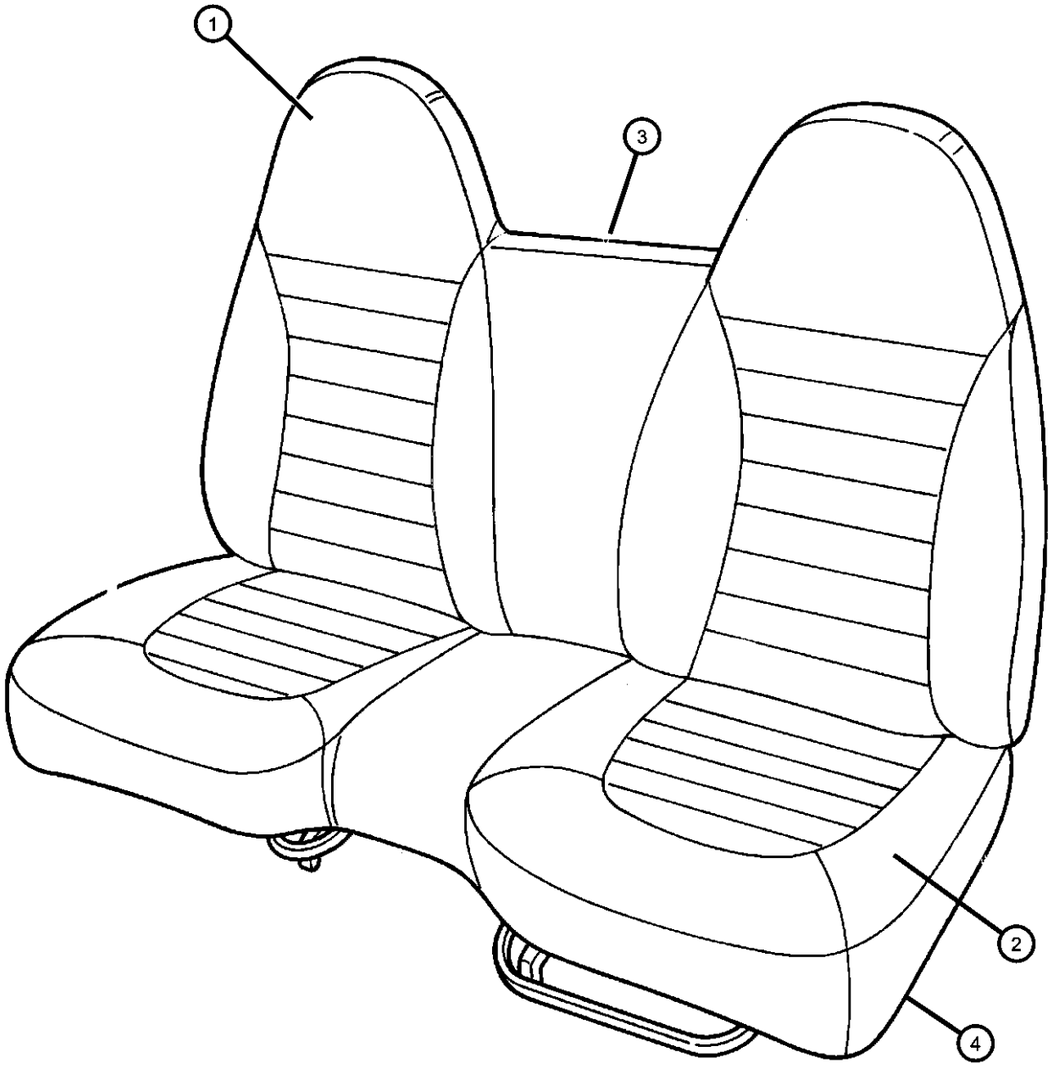

ITEM	PART NUMBER	QTY	LINE	SERIES	BODY	ENGINE	TRANS	TRIM	DESCRIPTION
1									COVER, Seat Back
	0TQ651C3AA	1			61			*A2	
	0TQ671C3AA	1			61			*G1	
2									COVER, Front Seat Cushion
	0TQ621C3AA	1			61			*A2	
	0TQ661C3AA	1			61			*G1	
3									BACK, Front Seat
	0TQ631C3AA	1			61			*A2	
	0TQ641C3AA	1			61			*G1	
4									CUSHION, Front Seat
	0TQ601C3AA	1			61			*A2	
	0TQ611C3AA	1			61			*G1	

DAKOTA (AN)

SERIES	LINE	BODY	ENGINE	TRANSMISSION
L = Quad Cab	1 = Dakota 2WD	31 = CLUB CAB 2-DR 6.5 FT BOX	EPO = 2.5L 4 Cyl.	DDC = TRANSMISSION - 5-SPEED HD MANUAL
L = Regular Cab	5 = Dakota 4WD	61 = REG CAB 6.5 FT BOX	EHO = 3.9L 6 Cyl.	DG4 = TRANSMISSION-MULTI-SPEED AUTO, 45RFE
L = Club Cab		84 = CREW CAB 4-DR W.B.1	EMO = 5.9L 8 Cyl.	DGK = TRANSMISSION - 4-SPD. AUTOMATIC,42RE
			EVO = 4.7L Magnum	DGT = TRANSMISSION - 4-SPD. AUTOMATIC,46RE
			EHC = 3.9L SMPI V6	DGO = AUTO. TRANS.
			EML = 5.9L V8 MPI Engine	
			EPE = 2.5L POWER TECH I-4 Cyl.	
			EVA = 4.7L V8 MPI	

Seat Front, Split Bench, Trim Code P9
Figure IAN-520

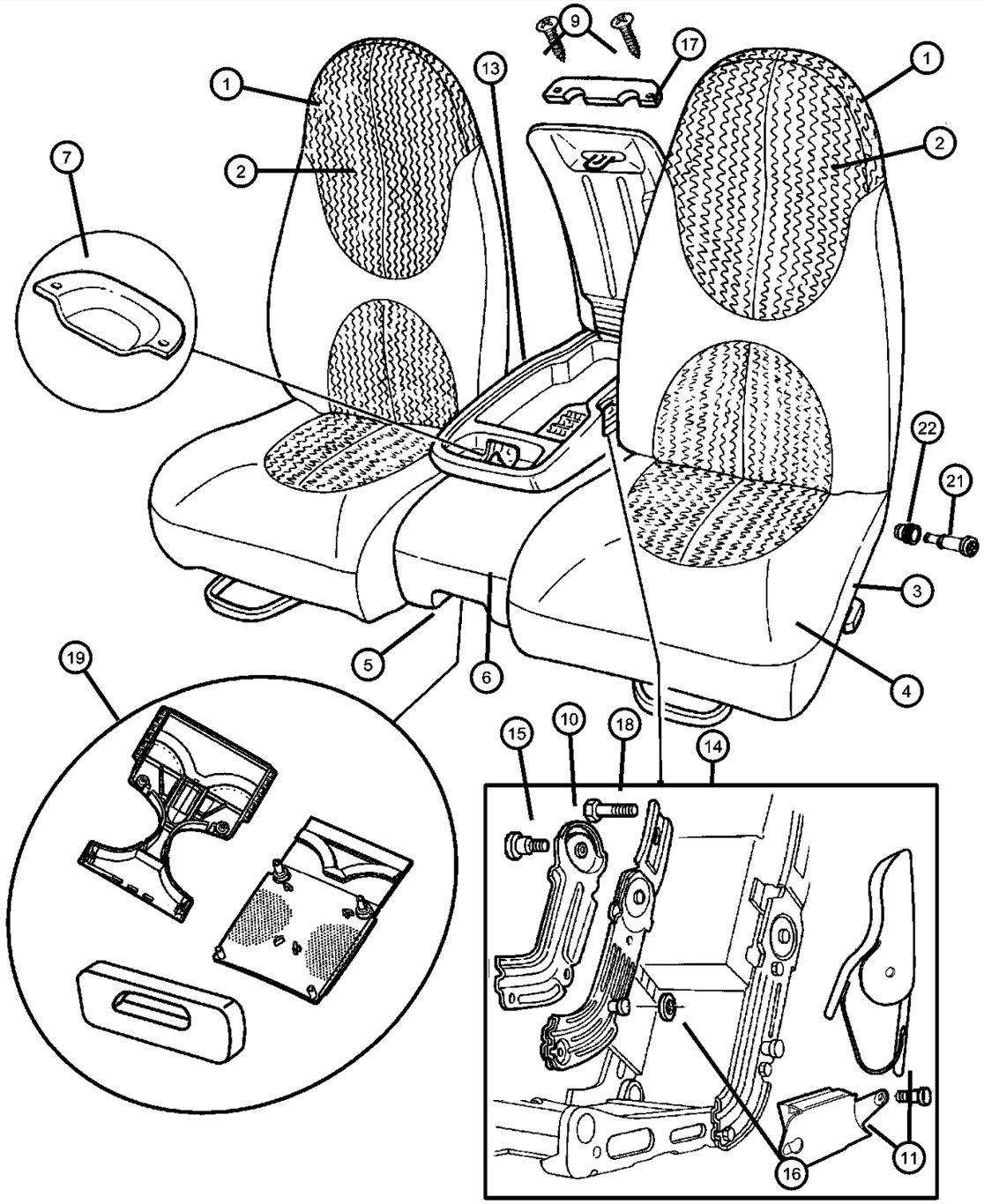

ITEM	PART NUMBER	QTY	LINE	SERIES	BODY	ENGINE	TRANS	TRIM	DESCRIPTION
1									BACK, Front Seat
	0TG301AZAA	1			84			*P9	[AZ], Passenger
	0TG301C3AA	1			84			*P9	[C3], Passenger
	0TG311AZAA	1			84			*P9	[AZ], Driver, Manual Seat
	0TG311C3AA	1			84			*P9	[C3], Driver, Manual Seat
	0TG331AZAA	1			84			*P9	[AZ], Driver, Power Seat
	0TG331C3AA	1			84			*P9	[C3], Driver, Power Seat
	0TG341AZAA	1			31			*P9	[AZ], Passenger
	0TG341C3AA	1			31			*P9	[C3], Passenger
	0TG351AZAA	1			31			*P9	[AZ], Driver, Manual Seat
	0TG351C3AA	1			31			*P9	[C3], Driver, Manual Seat
	0TG371AZAA	1			31			*P9	[AZ], Driver, Power Seat
	0TG371C3AA	1			31			*P9	[C3], Driver, Power Seat
	0TG441AZAA	2			61			*P9	[AZ]
	0TG441C3AA	2			61			*P9	[C3]
2									COVER, Seat Back
	0TG321AZAA	2			61			*P9	[AZ], Driver, Passenger
		2			31			*P9	[AZ], Driver, Passenger
	0TG321C3AA	2			61			*P9	[C3], Driver, Passenger
		2			31			*P9	[C3], Driver, Passenger
	0TG381AZAA	1			84			*P9	[AZ], Passenger
	0TG381C3AA	1			84			*P9	[C3], Passenger
	0TG391AZAA	1			84			*P9	[AZ], Driver
	0TG391C3AA	1			84			*P9	[C3], Driver
3									CUSHION, Front Seat, Contains: Frame, Recliner, Cable and Trim Cover
	0TF921AZAA	1			84			*P9	[AZ], Passenger
	0TF921C3AA	1			84			*P9	[C3], Passenger
	0TF931AZAA	1			84			*P9	[AZ], Manual Seat, Driver
	0TF931C3AA	1			84			*P9	[C3], Manual Seat, Driver
	0TF951AZAA	1			84			*P9	[AZ], Power Seat, Driver
	0TF951C3AA	1			84			*P9	[C3], Power Seat, Driver

DAKOTA (AN)

SERIES	LINE	BODY	ENGINE	TRANSMISSION
L = Quad Cab L = Regular Cab L = Club Cab	1 = Dakota 2WD 5 = Dakota 4WD	31 = CLUB CAB 2-DR 6.5 FT BOX 61 = REG CAB 6.5 FT BOX 84 = CREW CAB 4-DR W.B.1	EPO = 2.5L 4 Cyl. EHO = 3.9L 6 Cyl. EMO = 5.9L 8 Cyl. EVO = 4.7L Magnum EHC = 3.9L SMPI V6 EML = 5.9L V8 MPI Engine EPE = 2.5L POWER TECH I-4 Cyl. EVA = 4.7L V8 MPI	DDC = TRANSMISSION - 5-SPEED HD MANUAL DG4 = TRANSMISSION-MULTI-SPEED AUTO, 45RFE DGK = TRANSMISSION - 4-SPD. AUTOMATIC,42RE DGT = TRANSMISSION - 4-SPD. AUTOMATIC,46RE DGO = AUTO. TRANS.

AR = use ase required - = Non illustrrated part

Seat Front, Split Bench, Trim Code P9
Figure IAN-520

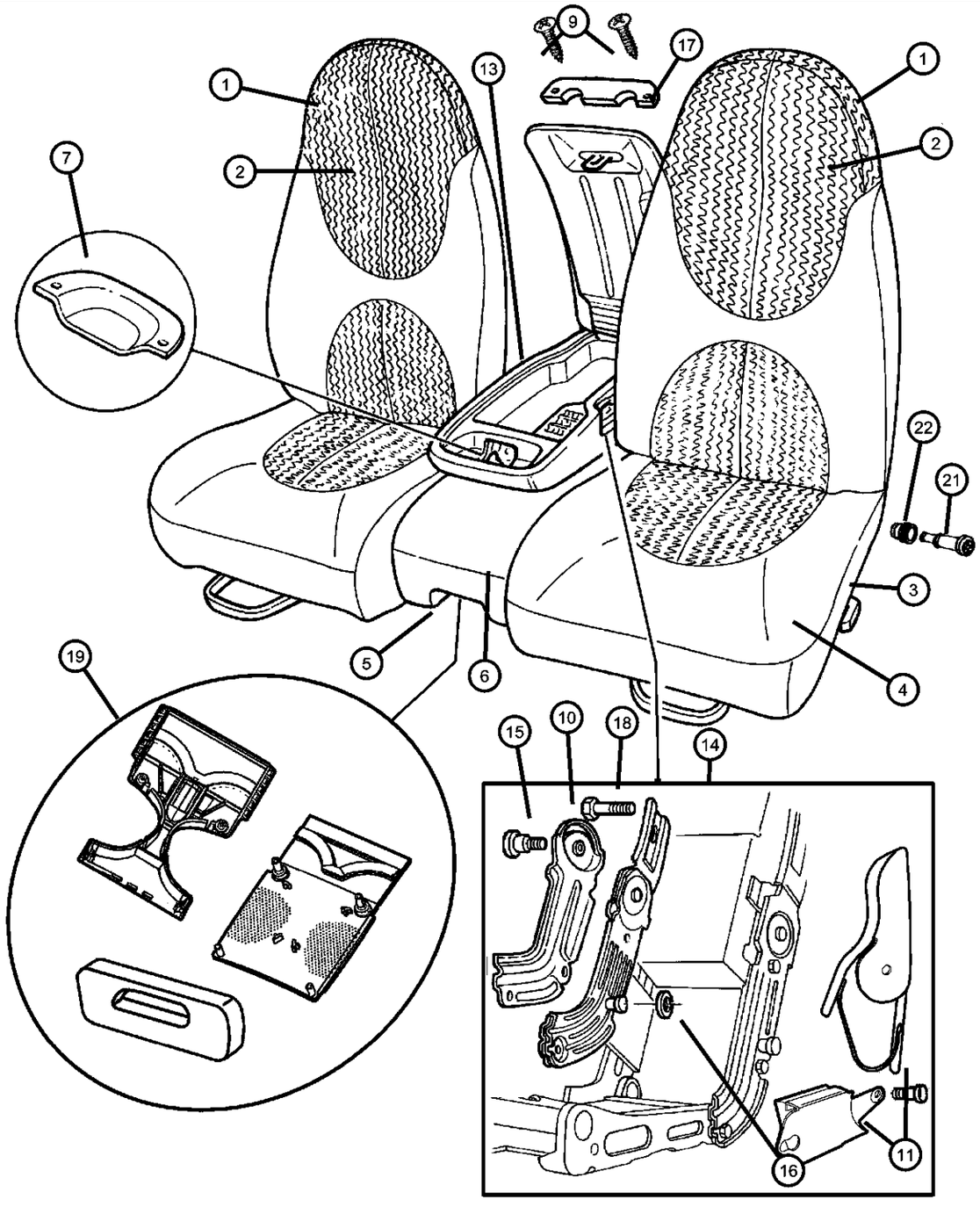

ITEM	PART NUMBER	QTY	LINE	SERIES	BODY	ENGINE	TRANS	TRIM	DESCRIPTION
	0TF981AZAA	1			31			*P9	[AZ], Passenger
	0TF981C3AA	1			31			*P9	[C3], Passenger
	0TF991AZAA	1			31			*P9	[AZ], Manual Seat, Driver
	0TF991C3AA	1			31			*P9	[C3], Manual Seat, Driver
	0TG011AZAA	1			31			*P9	[AZ], Power Seat, Driver
	0TG011C3AA	1			31			*P9	[C3], Power Seat, Driver
	0TG021AZAA	1			61			*P9	[AZ], Passenger
	0TG021C3AA	1			61			*P9	[C3], Passenger
	0TG031AZAA	1			61			*P9	[AZ], Driver
	0TG031C3AA	1			61			*P9	[C3], Driver
4									COVER, Front Seat Cushion
	0TG281AZAA	1			31			*P9	[AZ], Passenger
		1			61			*P9	[AZ], Passenger
		1			84			*P9	[AZ], Passenger
	0TG281C3AA	1			31			*P9	[C3], Passenger
		1			61			*P9	[C3], Passenger
		1			84			*P9	[C3], Passenger
	0TG291AZAA	1			84			*P9	[AZ], Power Seat, Driver
		1			31			*P9	[AZ], Power Seat, Driver
	0TG291C3AA	1			31			*P9	[C3], Power Seat, Driver
		1			84			*P9	[C3], Power Seat, Driver
	0UG511AZAA	1			61			*P9	[AZ], Driver
		1			84			*P9	[AZ], Driver
		1			31			*P9	[AZ], Driver
	0UG511C3AA	1			61			*P9	[C3], Driver
		1			31			*P9	[C3], Driver
		1			84			*P9	[C3], Driver
5									CUSHION, Front Seat, 20%
	0TG001AZAA	1			61			*P9	[AZ]
		1			84			*P9	[AZ]
		1			31			*P9	[AZ]

DAKOTA (AN)

SERIES	LINE	BODY	ENGINE	TRANSMISSION
L = Quad Cab L = Regular Cab L = Club Cab	1 = Dakota 2WD 5 = Dakota 4WD	31 = CLUB CAB 2-DR 6.5 FT BOX 61 = REG CAB 6.5 FT BOX 84 = CREW CAB 4-DR W.B.1	EPO = 2.5L 4 Cyl. EHO = 3.9L 6 Cyl. EMO = 5.9L 8 Cyl. EVO = 4.7L Magnum EHC = 3.9L SMPI V6 EML = 5.9L V8 MPI Engine EPE = 2.5L POWER TECH I-4 Cyl. EVA = 4.7L V8 MPI	DDC = TRANSMISSION - 5-SPEED HD MANUAL DG4 = TRANSMISSION-MULTI-SPEED AUTO, 45RFE DGK = TRANSMISSION - 4-SPD. AUTOMATIC,42RE DGT = TRANSMISSION - 4-SPD. AUTOMATIC,46RE DGO = AUTO. TRANS.

Seat Front, Split Bench, Trim Code P9
Figure IAN-520

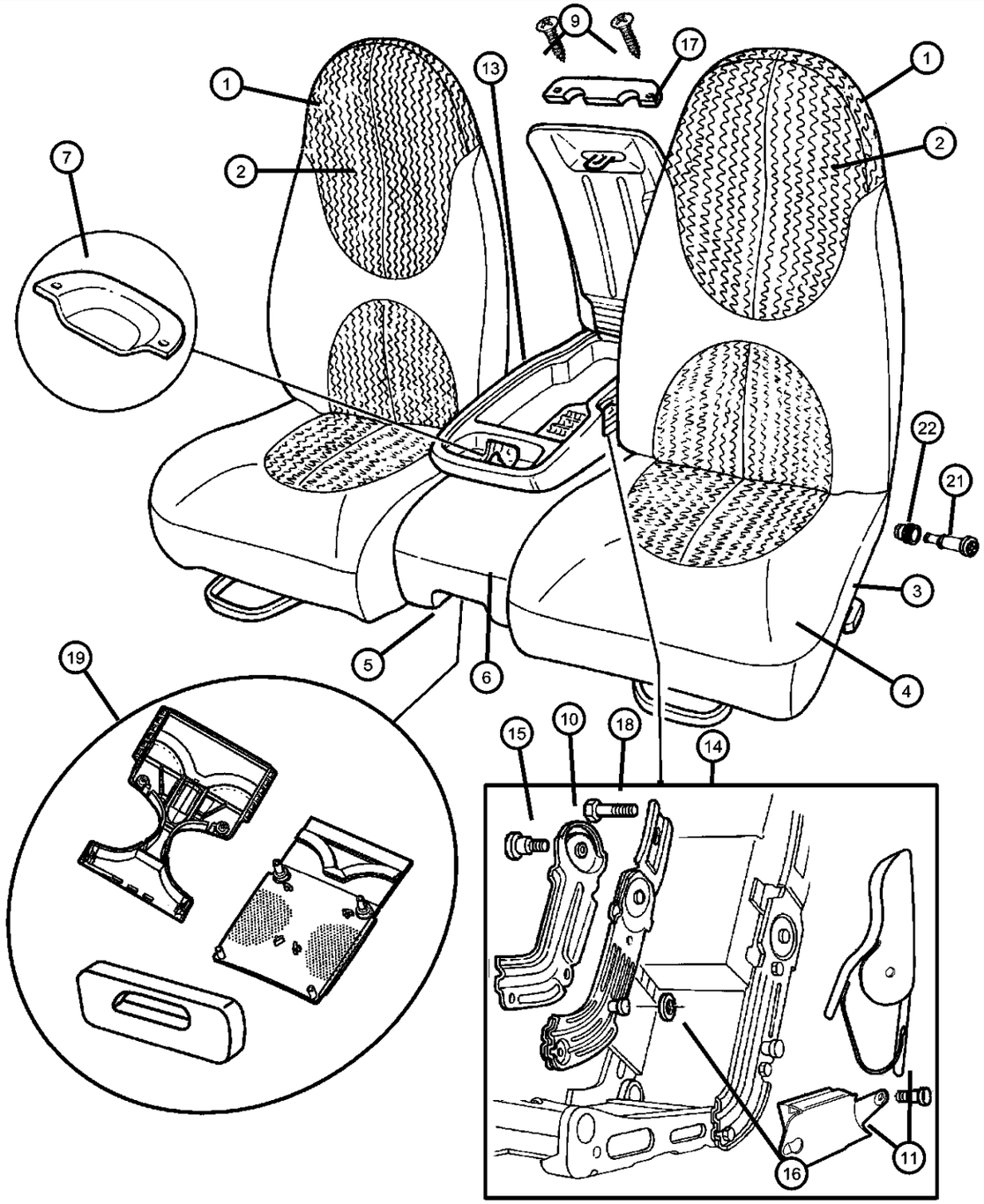

ITEM	PART NUMBER	QTY	LINE	SERIES	BODY	ENGINE	TRANS	TRIM	DESCRIPTION
	0TG001C3AA	1			31			*P9	[C3]
		1			84			*P9	[C3]
		1			61			*P9	[C3]
6									COVER, Front Seat Cushion, 20%
	0TG041AZAA	1			61			*P9	[AZ]
		1			31			*P9	[AZ]
		1			84			*P9	[AZ]
	0TG041C3AA	1			61			*P9	[C3]
		1			31			*P9	[C3]
		1			84			*P9	[C3]
7									BEZEL, Armrest
	05015008AA	1			84			*P9	
		1			31			*P9	
		1			61			*P9	
-8									REPAIR KIT, Armrest latch, Contains : Handle, Rivet and Locking Mechinism
	05015638AA	1			84			*P9	
		1			31			*P9	
		1			61			*P9	
9									SCREW, Arm Rest Bracket
	04883529AA	2			61			*P9	
		2			31			*P9	
		2			84			*P9	
10									COVER, Bracket
	04773418	1			61			*P9	
		1			31			*P9	
		1			84			*P9	
11									COVER, Seat latch
	05014589AA	1			61			*P9	Upper
		1			31			*P9	Upper
		1			84			*P9	Upper

DAKOTA (AN)

SERIES	LINE	BODY	ENGINE	TRANSMISSION
L = Quad Cab L = Regular Cab L = Club Cab	1 = Dakota 2WD 5 = Dakota 4WD	31 = CLUB CAB 2-DR 6.5 FT BOX 61 = REG CAB 6.5 FT BOX 84 = CREW CAB 4-DR W.B.1	EPO = 2.5L 4 Cyl. EHO = 3.9L 6 Cyl. EMO = 5.9L 8 Cyl. EVO = 4.7L Magnum EHC = 3.9L SMPI V6 EML = 5.9L V8 MPI Engine EPE = 2.5L POWER TECH I-4 Cyl. EVA = 4.7L V8 MPI	DDC = TRANSMISSION - 5-SPEED HD MANUAL DG4 = TRANSMISSION-MULTI-SPEED AUTO, 45RFE DGK = TRANSMISSION - 4-SPD. AUTOMATIC,42RE DGT = TRANSMISSION - 4-SPD. AUTOMATIC,46RE DGO = AUTO. TRANS.

Seat Front, Split Bench, Trim Code P9
Figure IAN-520

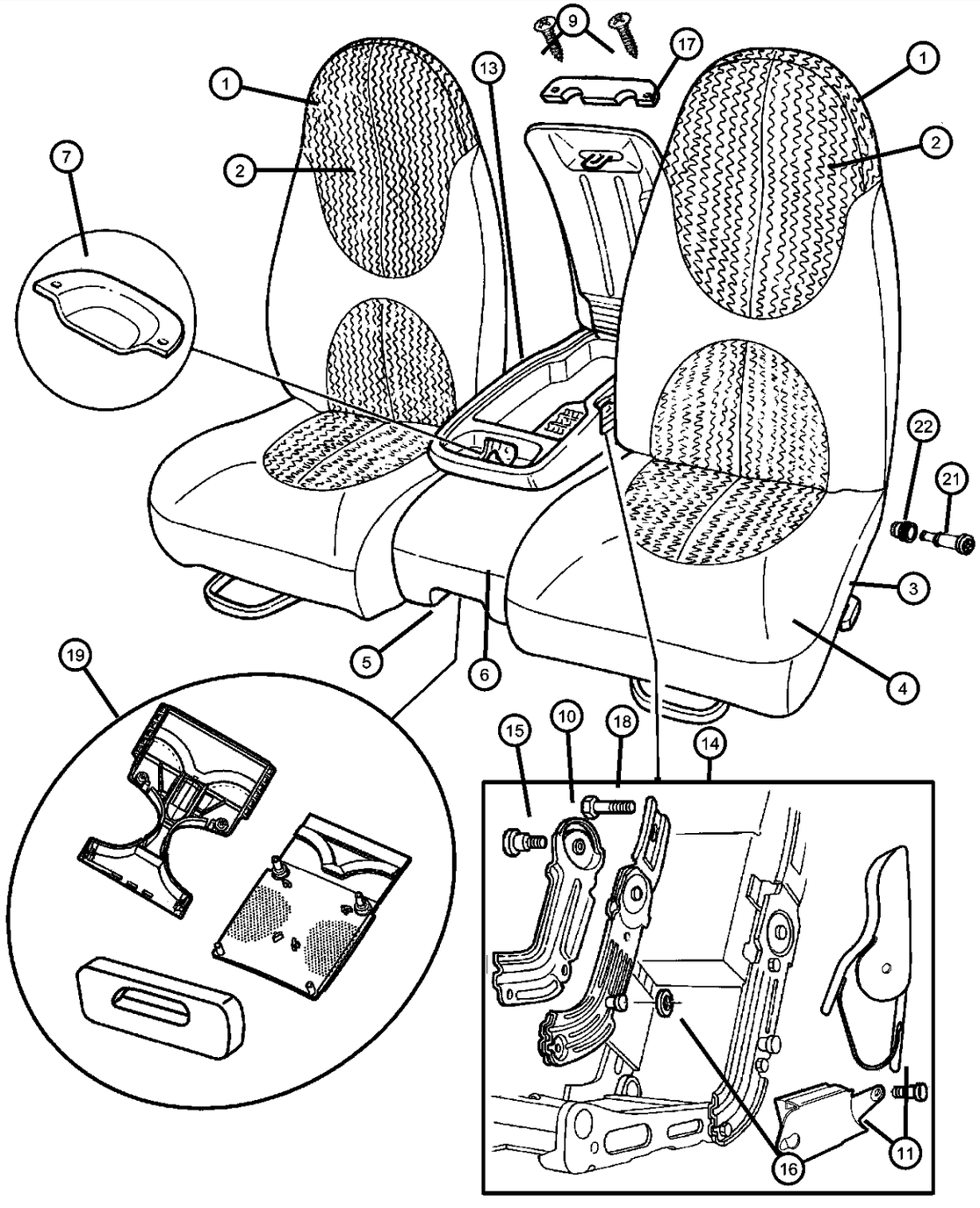

ITEM	PART NUMBER	QTY	LINE	SERIES	BODY	ENGINE	TRANS	TRIM	DESCRIPTION
	05016165AA	1			61			*P9	Lower
		1			31			*P9	Lower
		1			84			*P9	Lower
-12									BUSHING, Seat Inertia Latch
	04886420AA	1			61			*P9	
		1			31			*P9	
		1			84			*P9	
13									ARMREST, Seat
	0TG111AZAA	1			61			*P9	[AZ]
		1			31			*P9	[AZ]
		1			84			*P9	[AZ]
	0TG111C3AA	1			61			*P9	[C3]
		1			31			*P9	[C3]
		1			84			*P9	[C3]
14									BOLT, Shoulder
	04883533AA	1			61			*P9	Inertia Cover
		1			31			*P9	Inertia Cover
		1			84			*P9	Inertia Cover
15									BOLT, Shoulder, Pivot Bracket
	04883535AA	1			61			*P9	
		1			31			*P9	
		1			84			*P9	
16									WASHER, Upper Pivot
	04883562AA	1			61			*P9	
		1			31			*P9	
		1			84			*P9	
17									COVER, Hinge
	0SD741AZAA	1			61			*P9	[AZ]
		1			31			*P9	[AZ]
		1			84			*P9	[AZ]
	0SD741C3AA	1			61			*P9	[C3]

DAKOTA (AN)

SERIES	LINE	BODY	ENGINE	TRANSMISSION
L = Quad Cab L = Regular Cab L = Club Cab	1 = Dakota 2WD 5 = Dakota 4WD	31 = CLUB CAB 2-DR 6.5 FT BOX 61 = REG CAB 6.5 FT BOX 84 = CREW CAB 4-DR W.B.1	EPO = 2.5L 4 Cyl. EHO = 3.9L 6 Cyl. EMO = 5.9L 8 Cyl. EVO = 4.7L Magnum EHC = 3.9L SMPI V6 EML = 5.9L V8 MPI Engine EPE = 2.5L POWER TECH I-4 Cyl. EVA = 4.7L V8 MPI	DDC = TRANSMISSION - 5-SPEED HD MANUAL DG4 = TRANSMISSION-MULTI-SPEED AUTO, 45RFE DGK = TRANSMISSION - 4-SPD. AUTOMATIC,42RE DGT = TRANSMISSION - 4-SPD. AUTOMATIC,46RE DGO = AUTO. TRANS.

AR = use ase required - = Non illustrrated part

Seat Front, Split Bench, Trim Code P9
Figure IAN-520

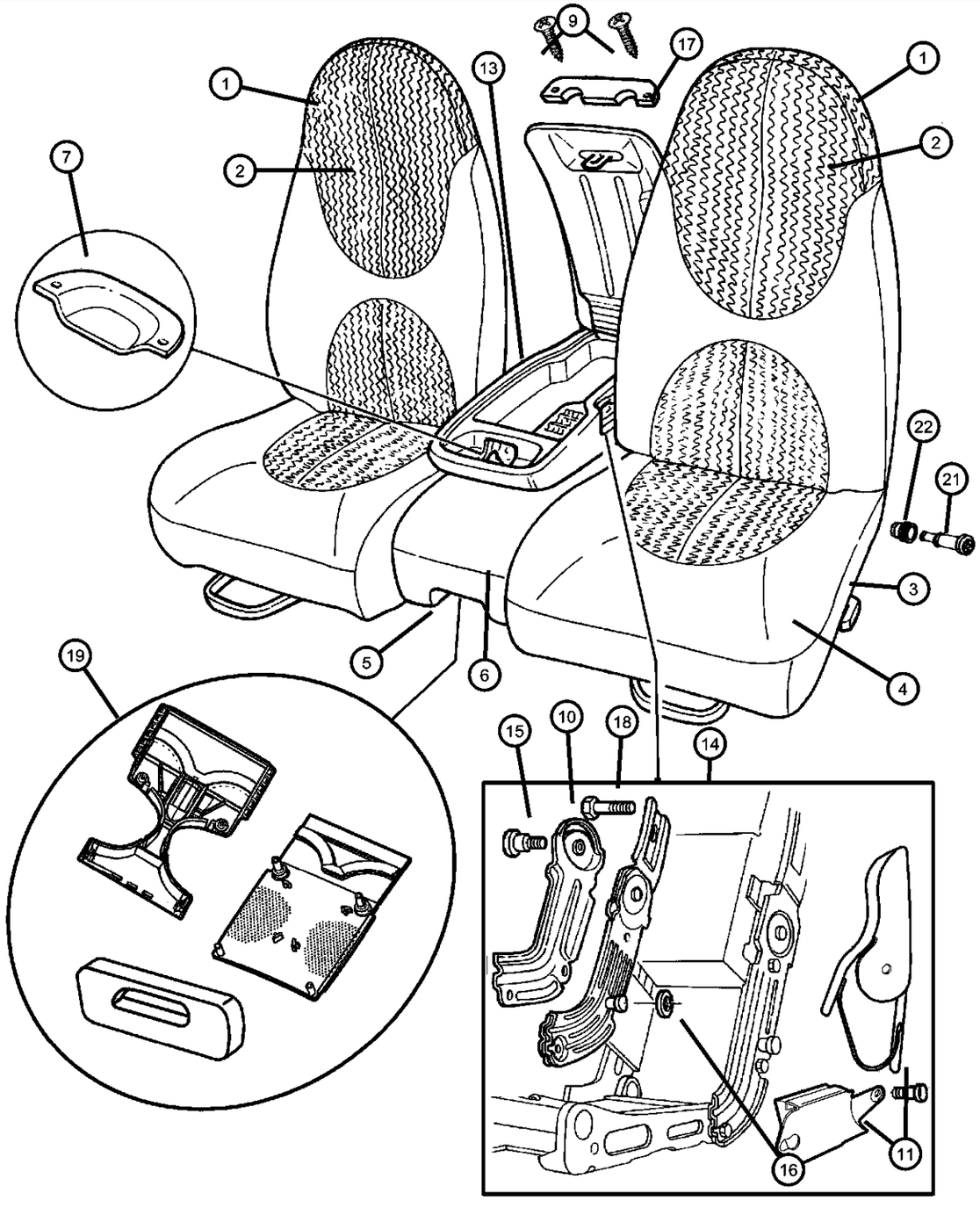

ITEM	PART NUMBER	QTY	LINE	SERIES	BODY	ENGINE	TRANS	TRIM	DESCRIPTION
		1			31			*P9	[C3]
		1			84			*P9	[C3]
18									BOLT, M8x1.25x25
	04883540AA	10			61			*P9	
		10			31			*P9	
		10			84			*P9	Manual Seat
		12			84			*P9	Power Seat
19									CUPHOLDER
	0UG291AZAA	1			31			*P9	[AZ]
		1			61			*P9	[AZ]
		1			84			*P9	[AZ]
	0UG291C3AA	1			84			*P9	[C3]
		1			61			*P9	[C3]
		1			31			*P9	[C3]
-20	05012008AB	1							ANCHOR KIT, Tether-Child Seat
21									BOLT, Seat, Cushion to Frame
	05086165AA	4			61			*P9	
		4			31			*P9	
		4			84			*P9	
22									BUSHING, Pivot
	04886477AA	4			31			*P9	
		4			61			*P9	
		4			84			*P9	
-23									PIN, Armrest Lid Hinge, Consists Of: Detent, Lid Hinge, Pin, Armrest Hinge, Detent, Bin Hinge, Spring, Armrest Hinge, Screw, Armrest Hinge
	05134381AA	1			61			*P9	
		1			31			*P9	
		1			84			*P9	

DAKOTA (AN)

SERIES	LINE	BODY	ENGINE	TRANSMISSION
L = Quad Cab L = Regular Cab L = Club Cab	1 = Dakota 2WD 5 = Dakota 4WD	31 = CLUB CAB 2-DR 6.5 FT BOX 61 = REG CAB 6.5 FT BOX 84 = CREW CAB 4-DR W.B.1	EPO = 2.5L 4 Cyl. EHO = 3.9L 6 Cyl. EMO = 5.9L 8 Cyl. EVO = 4.7L Magnum EHC = 3.9L SMPI V6 EML = 5.9L V8 MPI Engine EPE = 2.5L POWER TECH I-4 Cyl. EVA = 4.7L V8 MPI	DDC = TRANSMISSION - 5-SPEED HD MANUAL DG4 = TRANSMISSION-MULTI-SPEED AUTO, 45RFE DGK = TRANSMISSION - 4-SPD. AUTOMATIC,42RE DGT = TRANSMISSION - 4-SPD. AUTOMATIC,46RE DGO = AUTO. TRANS.

AR = use ase required - = Non illustrrated part

Seat, Front, Bucket Seats,Trim Code K5
Figure IAN-530

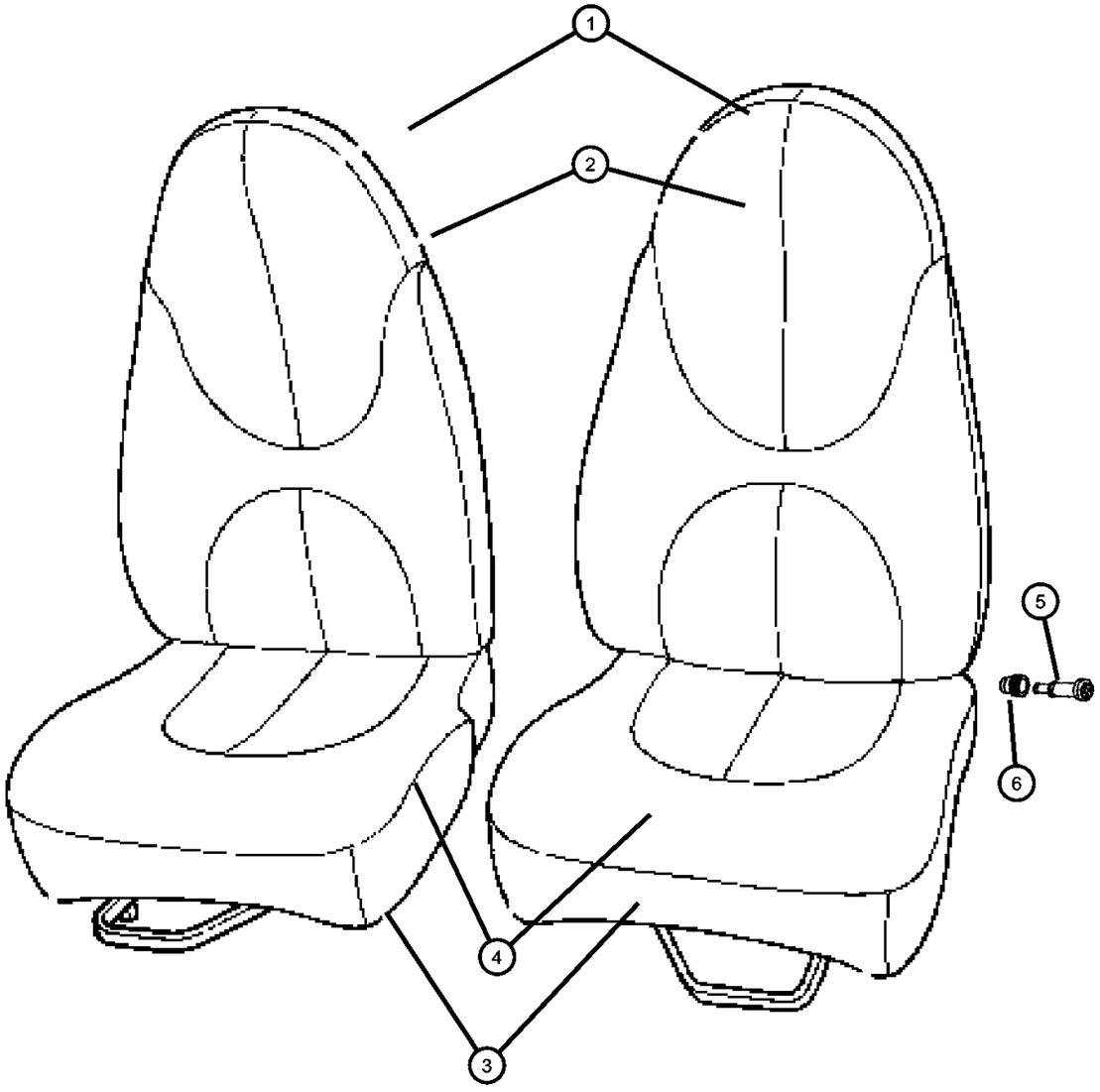

ITEM	PART NUMBER	QTY	LINE	SERIES	BODY	ENGINE	TRANS	TRIM	DESCRIPTION
1									BACK, Front Seat
	0TG301AZAA	1			84			*K5	[AZ], Passenger
	0TG301C3AA	1			84			*K5	[C3], Passenger
	0TG311AZAA	1			84			*K5	[AZ], Driver
	0TG311C3AA	1			84			*K5	[C3], Driver
	0TG331AZAA	1			84			*K5	[AZ], Power Seat, Driver
	0TG331C3AA	1			84			*K5	[C3], Power Seat, Driver
	0TG341AZAA	1			31			*K5	[AZ], Passenger
	0TG341C3AA	1			31			*K5	[C3], Passenger
	0TG351AZAA	1			31			*K5	[AZ], Driver
	0TG351C3AA	1			31			*K5	[C3], Driver
	0TG371AZAA	1			31			*K5	[AZ], Power Seat, Driver
	0TG371C3AA	1			31			*K5	[C3], Power Seat, Driver
	0TG441AZAA	2			61			*K5	[AZ], Driver, Passenger
	0TG441C3AA	2			61			*K5	[C3], Driver, Passenger
2									COVER, Seat Back
	0TG321AZAA	2			61			*K5	[AZ], Driver, Passenger
		2			31			*K5	[AZ], Driver, Passenger
	0TG321C3AA	2			61			*K5	[C3], Driver, Passenger
		2			31			*K5	[C3], Driver, Passenger
	0TG381AZAA	1			84			*K5	[AZ], Passenger
	0TG381C3AA	1			84			*K5	[C3], Passenger
	0TG391AZAA	1			84			*K5	[AZ], Driver
	0TG391C3AA	1			84			*K5	[C3], Driver
3									CUSHION, Front Seat, Contains: Frame, Recliner, Cable and Trim Cover
	0TF921AZAA	1			84			*K5	[AZ], Passenger
	0TF921C3AA	1			84			*K5	[C3], Passenger
	0TF931AZAA	1			84			*K5	[AZ], Driver
	0TF931C3AA	1			84			*K5	[C3], Driver
	0TF951AZAA	1			84			*K5	[AZ], Power Seat, Driver
	0TF951C3AA	1			84			*K5	[C3], Power Seat, Driver

DAKOTA (AN)

SERIES	LINE	BODY	ENGINE	TRANSMISSION
L = Quad Cab L = Regular Cab L = Club Cab	1 = Dakota 2WD 5 = Dakota 4WD	31 = CLUB CAB 2-DR 6.5 FT BOX 61 = REG CAB 6.5 FT BOX 84 = CREW CAB 4-DR W.B.1	EPO = 2.5L 4 Cyl. EHO = 3.9L 6 Cyl. EMO = 5.9L 8 Cyl. EVO = 4.7L Magnum EHC = 3.9L SMPI V6 EML = 5.9L V8 MPI Engine EPE = 2.5L POWER TECH I-4 Cyl. EVA = 4.7L V8 MPI	DDC = TRANSMISSION - 5-SPEED HD MANUAL DG4 = TRANSMISSION-MULTI-SPEED AUTO, 45RFE DGK = TRANSMISSION - 4-SPD. AUTOMATIC,42RE DGT = TRANSMISSION - 4-SPD. AUTOMATIC,46RE DGO = AUTO. TRANS.

Seat, Front, Bucket Seats,Trim Code K5
Figure IAN-530

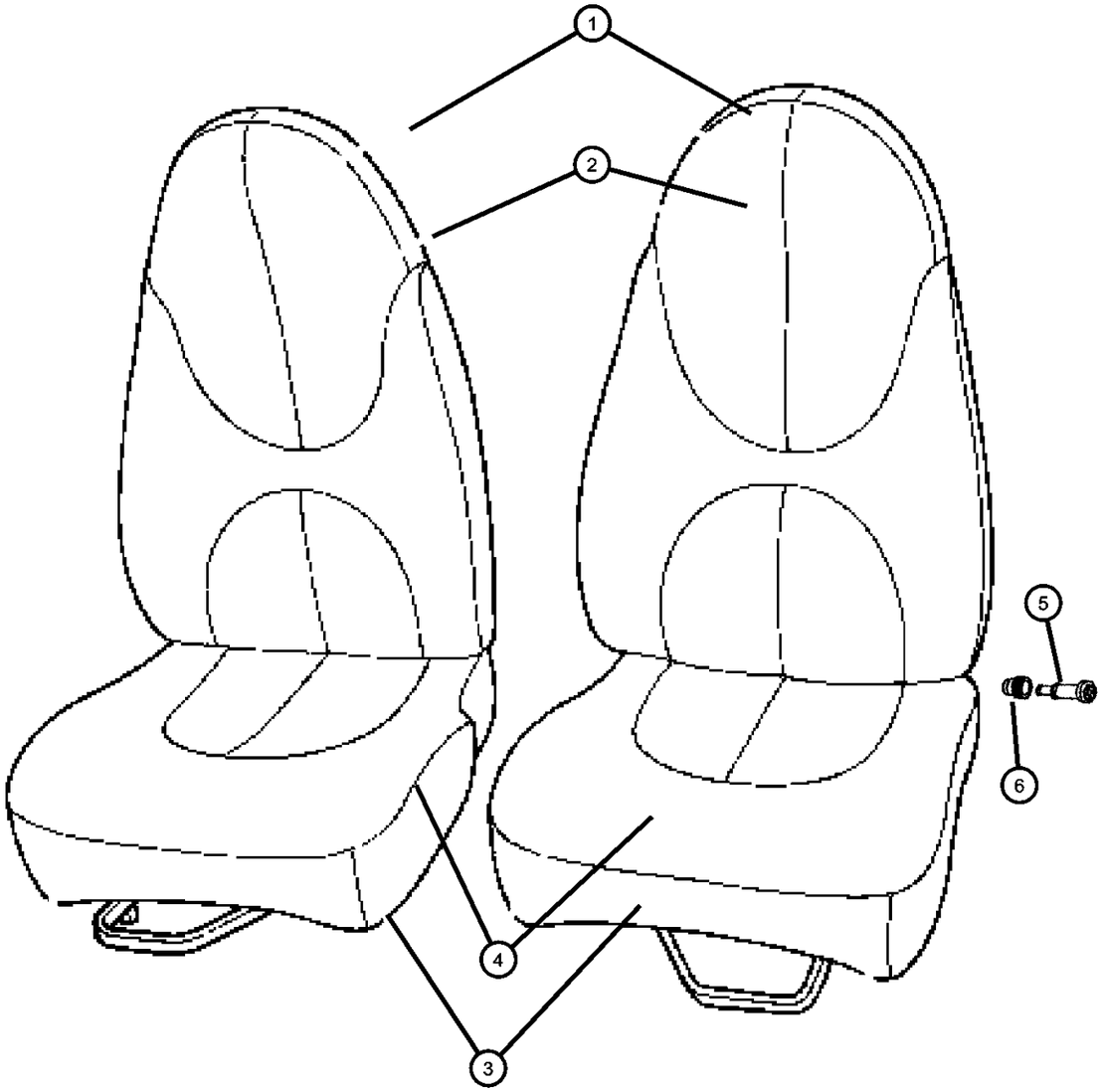

ITEM	PART NUMBER	QTY	LINE	SERIES	BODY	ENGINE	TRANS	TRIM	DESCRIPTION
	0TF981AZAA	1			31			*K5	[AZ], Passenger
	0TF981C3AA	1			31			*K5	[C3], Passenger
	0TF991AZAA	1			31			*K5	[AZ], Driver
	0TF991C3AA	1			31			*K5	[C3], Driver
	0TG011AZAA	1			31			*K5	[AZ], Power Seat, Driver
	0TG011C3AA	1			31			*K5	[C3], Power Seat, Driver
	0TG021AZAA	1			61			*K5	[AZ], Passenger
	0TG021C3AA	1			61			*K5	[C3], Passenger
	0TG031AZAA	1			61			*K5	[AZ], Driver
	0TG031C3AA	1			61			*K5	[C3], Driver
4									COVER, Front Seat Cushion
	0TG281AZAA	1			84			*K5	[AZ], Passenger
		1			61			*K5	[AZ], Passenger
		1			31			*K5	[AZ], Passenger
	0TG281C3AA	1			31			*K5	[C3], Passenger
		1			84			*K5	[C3], Passenger
		1			61			*K5	[C3], Passenger
	0TG291AZAA	1			31			*K5	[AZ], Power Seat, Driver
		1			84			*K5	[AZ], With Power Drivers Seat, Driver
	0TG291C3AA	1			31			*K5	[C3], Power Seat, Driver
		1			84			*K5	[C3], With Power Drivers Seat, Driver
	0UG511AZAA	1			61			*K5	[AZ], Driver
		1			31			*K5	[AZ], Driver
		1			84			*K5	[AZ], Driver
	0UG511C3AA	1			31			*K5	[C3], Driver
		1			84			*K5	[C3], Driver
		1			61			*K5	[C3], Driver
5									BOLT, Seat, Cushion to Frame
	05086165AA	4			61			*K5	
		4			31			*K5	
		4			84			*K5	

DAKOTA (AN)

SERIES	LINE	BODY	ENGINE	TRANSMISSION
L = Quad Cab L = Regular Cab L = Club Cab	1 = Dakota 2WD 5 = Dakota 4WD	31 = CLUB CAB 2-DR 6.5 FT BOX 61 = REG CAB 6.5 FT BOX 84 = CREW CAB 4-DR W.B.1	EPO = 2.5L 4 Cyl. EHO = 3.9L 6 Cyl. EMO = 5.9L 8 Cyl. EVO = 4.7L Magnum EHC = 3.9L SMPI V6 EML = 5.9L V8 MPI Engine EPE = 2.5L POWER TECH I-4 Cyl. EVA = 4.7L V8 MPI	DDC = TRANSMISSION - 5-SPEED HD MANUAL DG4 = TRANSMISSION-MULTI-SPEED AUTO, 45RFE DGK = TRANSMISSION - 4-SPD. AUTOMATIC,42RE DGT = TRANSMISSION - 4-SPD. AUTOMATIC,46RE DGO = AUTO. TRANS.

AR = use ase required - = Non illustrrated part

Seat, Front, Bucket Seats,Trim Code K5
Figure IAN-530

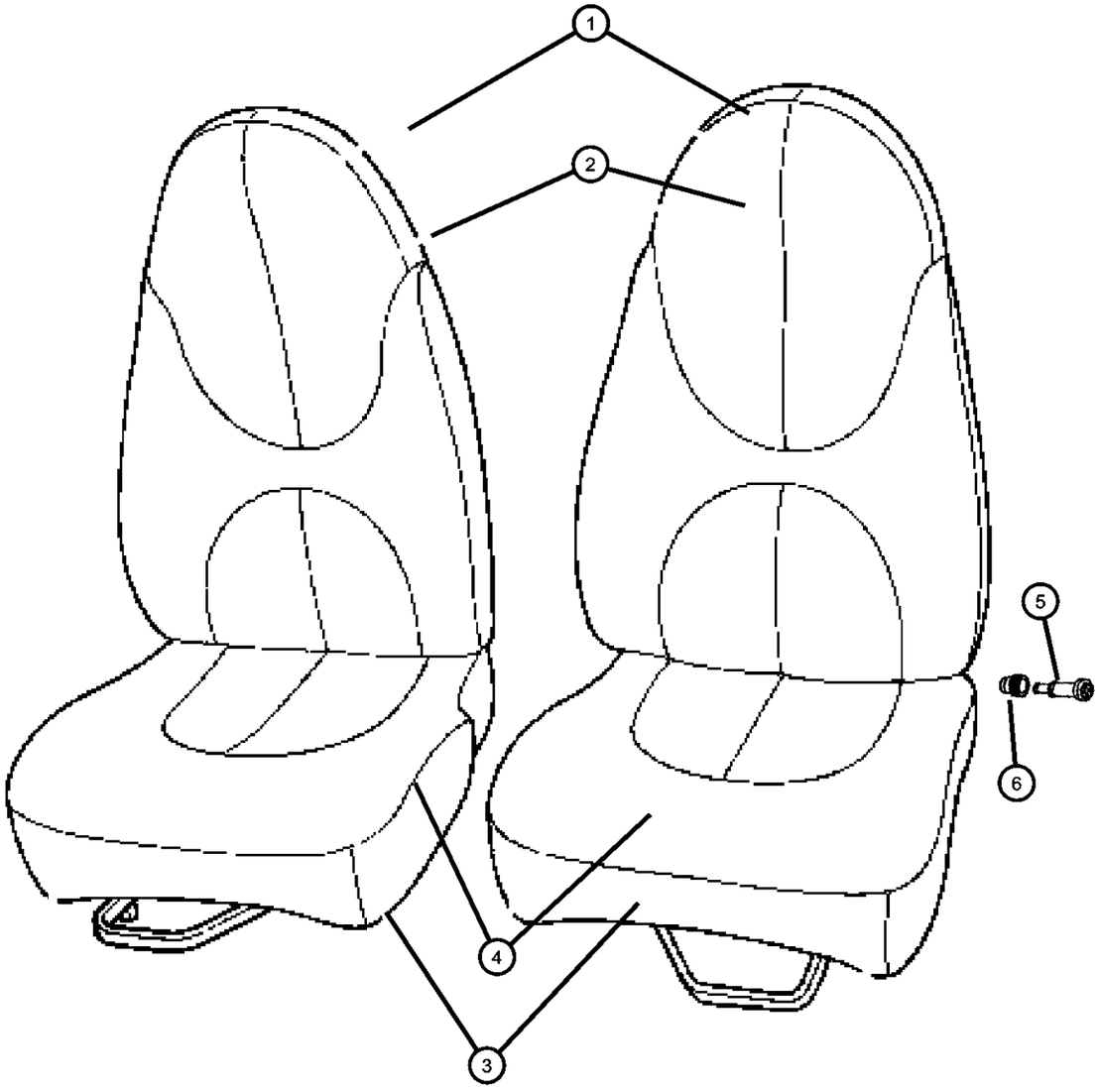

ITEM	PART NUMBER	QTY	LINE	SERIES	BODY	ENGINE	TRANS	TRIM	DESCRIPTION
6									BUSHING, Pivot
	04886477AA	4			61			*K5	
		4			31			*K5	
		4			84			*K5	

DAKOTA (AN)

SERIES	LINE	BODY	ENGINE	TRANSMISSION
L = Quad Cab	1 = Dakota 2WD	31 = CLUB CAB 2-DR 6.5 FT BOX	EPO = 2.5L 4 Cyl.	DDC = TRANSMISSION - 5-SPEED HD MANUAL
L = Regular Cab	5 = Dakota 4WD	61 = REG CAB 6.5 FT BOX	EHO = 3.9L 6 Cyl.	DG4 = TRANSMISSION-MULTI-SPEED AUTO, 45RFE
L = Club Cab		84 = CREW CAB 4-DR W.B.1	EMO = 5.9L 8 Cyl.	DGK = TRANSMISSION - 4-SPD. AUTOMATIC,42RE
			EVO = 4.7L Magnum	DGT = TRANSMISSION - 4-SPD. AUTOMATIC,46RE
			EHC = 3.9L SMPI V6	DGO = AUTO. TRANS.
			EML = 5.9L V8 MPI Engine	
			EPE = 2.5L POWER TECH I-4 Cyl.	
			EVA = 4.7L V8 MPI	

Seat, Front Bucket, Trim Code [LJ]
Figure IAN-540

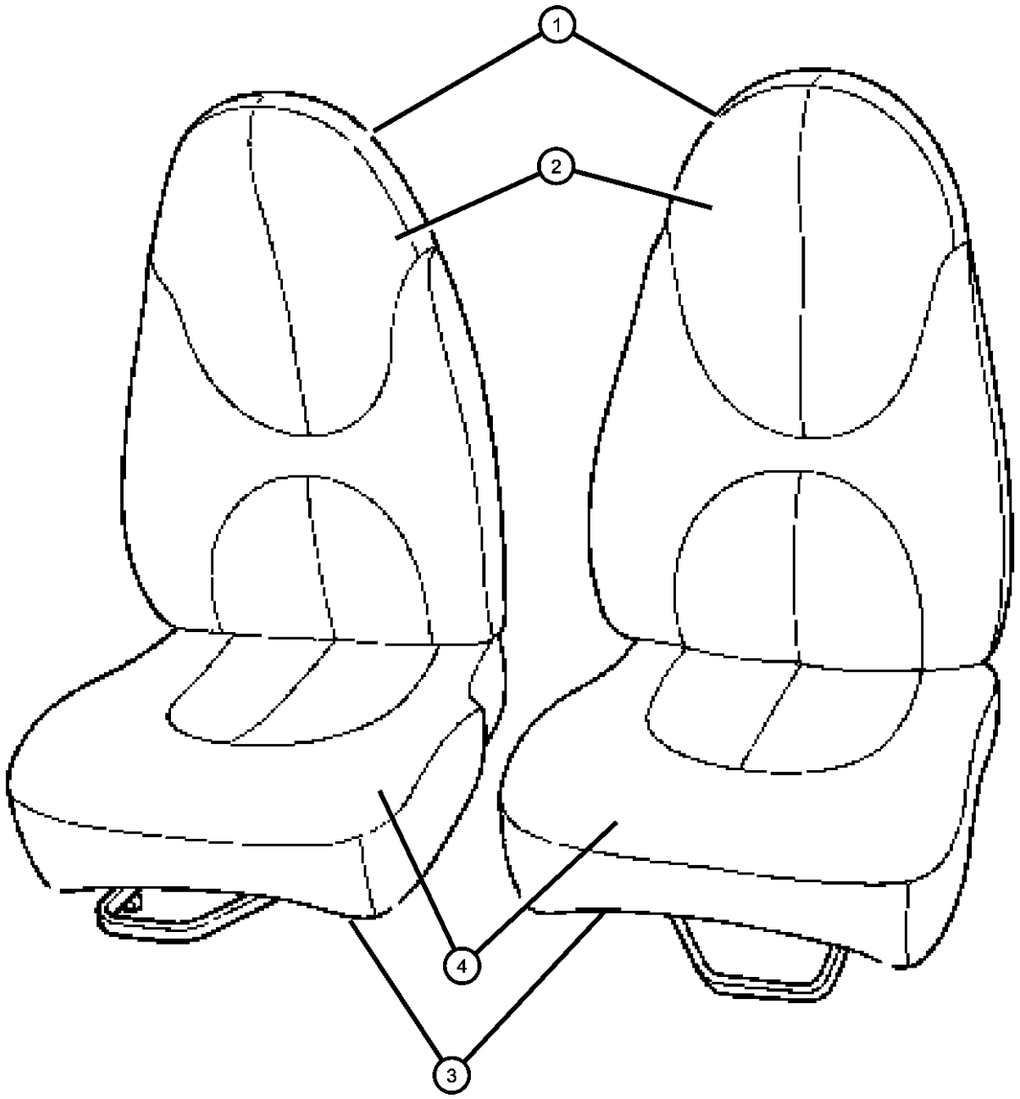

ITEM	PART NUMBER	QTY	LINE	SERIES	BODY	ENGINE	TRANS	TRIM	DESCRIPTION
1									BACK, Front Seat
	0UH701AZAA	1			84			*LJ	Passenger
	0UH711AZAA	1			84			*LJ	Driver
2									COVER, Seat Back
	0UH721AZAA	1			84			*LJ	Passenger
	0UH731AZAA	1			84			*LJ	Driver
3									CUSHION, Front Seat, Contains: Frame, Recliner, Cable and Trim Cover
	0UH661AZAA	1			84			*LJ	Passenger
	0UH671AZAA	1			84			*LJ	Driver
4									COVER, Front Seat Cushion
	0UH681AZAA	1			84			*LJ	Passenger
	0UH691AZAA	1			84			*LJ	Driver

DAKOTA (AN)

SERIES	LINE	BODY	ENGINE	TRANSMISSION
L = Quad Cab L = Regular Cab L = Club Cab	1 = Dakota 2WD 5 = Dakota 4WD	31 = CLUB CAB 2-DR 6.5 FT BOX 61 = REG CAB 6.5 FT BOX 84 = CREW CAB 4-DR W.B.1	EPO = 2.5L 4 Cyl. EHO = 3.9L 6 Cyl. EMO = 5.9L 8 Cyl. EVO = 4.7L Magnum EHC = 3.9L SMPI V6 EML = 5.9L V8 MPI Engine EPE = 2.5L POWER TECH I-4 Cyl. EVA = 4.7L V8 MPI	DDC = TRANSMISSION - 5-SPEED HD MANUAL DG4 = TRANSMISSION-MULTI-SPEED AUTO, 45RFE DGK = TRANSMISSION - 4-SPD. AUTOMATIC,42RE DGT = TRANSMISSION - 4-SPD. AUTOMATIC,46RE DGO = AUTO. TRANS.

Rear Seat And Attaching Parts Trim Code P9, K5
Figure IAN-610

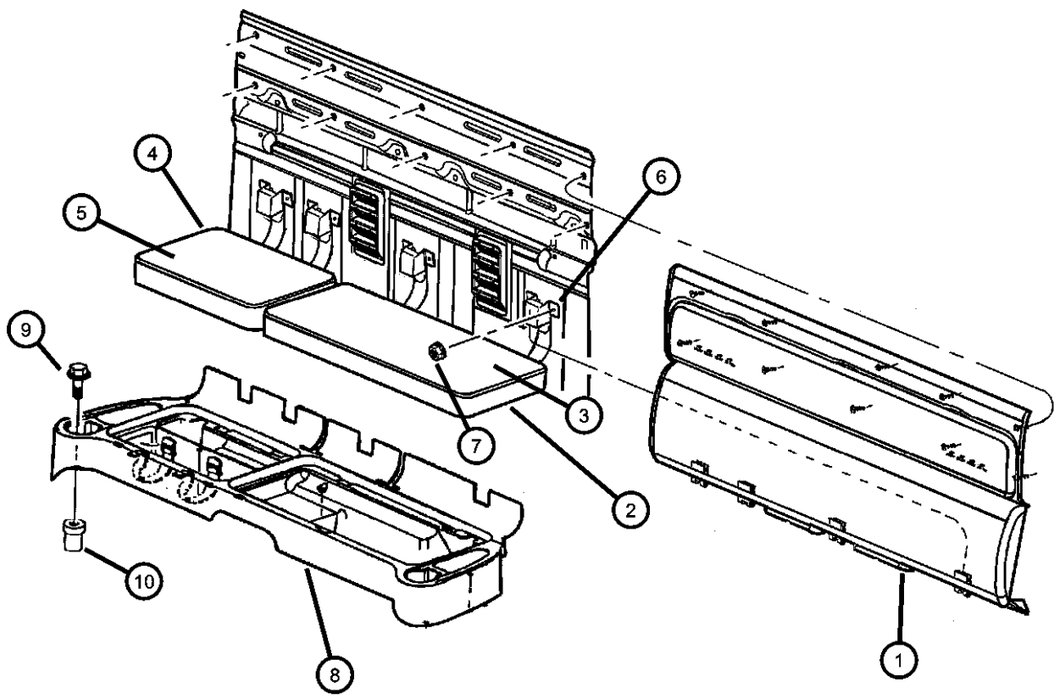

ITEM	PART NUMBER	QTY	LINE	SERIES	BODY	ENGINE	TRANS	TRIM	DESCRIPTION
1									BOLSTER, Cab Back Panel
	5GP18LAZAA	1			31			*O0	[AZ]
	5GP18RC3AA	1			31			*O0	[C3]
2									CUSHION, Rear Seat, 60%, Includes Hinges
	0TG251C3AA	1			31			*K5	[C3], Left
		1			31			*P9	[C3], Left
	0TG25LAZAA	1			31			*K5	[AZ], Left
		1			31			*P9	[AZ], Left
3									COVER, Rear Seat Cushion, 60%
	0TG271C3AA	1			31			*K5	[C3], Left
		1			31			*P9	[C3], Left
	0TG27LAZAA	1			31			*K5	[AZ], Left
		1			31			*P9	[AZ], Left
4									CUSHION, Rear Seat, 40%, Includes Hinges
	0TG241C3AA	1			31			*K5	[C3], Right
		1			31			*P9	[C3], Right
	0TG24LAZAA	1			31			*K5	[AZ], Right
		1			31			*P9	[AZ], Right
5									COVER, Rear Seat Cushion, 40%
	0TG261C3AA	1			31			*K5	[C3], Left
		1			31			*P9	[C3], Left
	0TG26LAZAA	1			31			*K5	[AZ], Left
		1			31			*P9	[AZ], Left
6	06505010AA	8			31				BOLT
7	06100051	8			31				NUT AND WASHER, Hex Nut-Coned Washer, M8 x 1.25
8	5EM01JX8AE	1			31			*O0	BASE, Load Floor
9	06100568	5			31				BOLT AND WASHER, Implement Attaching
10	06503910	5			31				NUT

DAKOTA (AN)

SERIES	LINE	BODY	ENGINE	TRANSMISSION
L = Quad Cab	1 = Dakota 2WD	31 = CLUB CAB 2-DR 6.5 FT BOX	EPO = 2.5L 4 Cyl.	DDC = TRANSMISSION - 5-SPEED HD MANUAL
L = Regular Cab	5 = Dakota 4WD	61 = REG CAB 6.5 FT BOX	EHO = 3.9L 6 Cyl.	DG4 = TRANSMISSION-MULTI-SPEED AUTO, 45RFE
L = Club Cab		84 = CREW CAB 4-DR W.B.1	EMO = 5.9L 8 Cyl.	DGK = TRANSMISSION - 4-SPD. AUTOMATIC,42RE
			EVO = 4.7L Magnum	DGT = TRANSMISSION - 4-SPD. AUTOMATIC,46RE
			EHC = 3.9L SMPI V6	DGO = AUTO. TRANS.
			EML = 5.9L V8 MPI Engine	
			EPE = 2.5L POWER TECH I-4 Cyl.	
			EVA = 4.7L V8 MPI	

Rear Seat, Quad Cab
Figure IAN-620

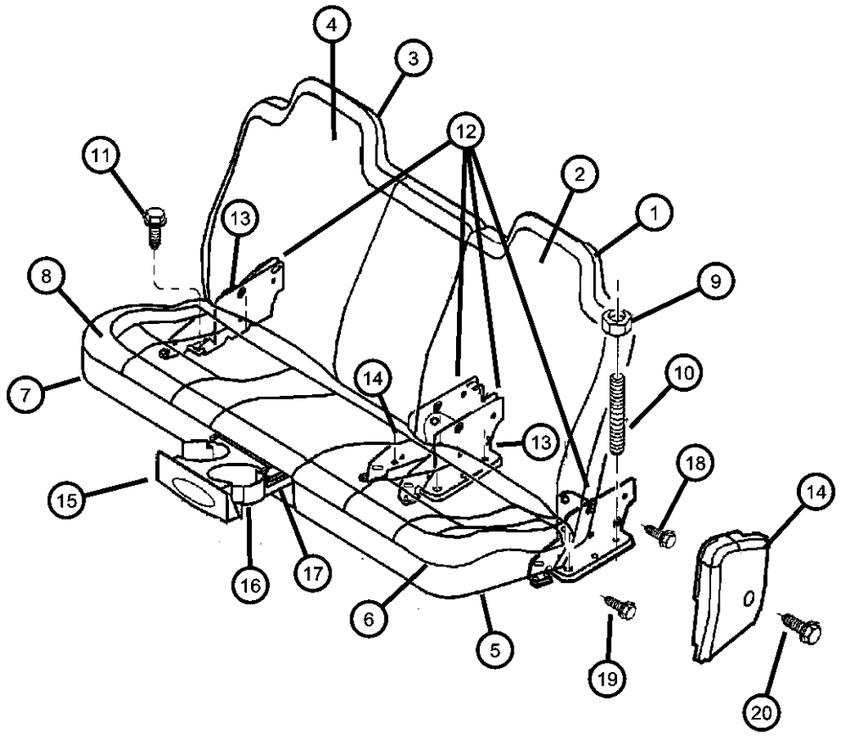

ITEM	PART NUMBER	QTY	LINE	SERIES	BODY	ENGINE	TRANS	TRIM	DESCRIPTION
1									SEAT BACK, Rear, 40%
	0TG411AZAA	1			84			*K5	[AZ]
		1			84			*P9	[AZ]
	0TG411C3AA	1			84			*K5	[C3]
		1			84			*P9	[C3]
	0UH831AZAA	1			84			*LJ	[AZ]
2									COVER, Seat Back, 40%
	0TG431AZAA	1			84			*K5	[AZ]
		1			84			*P9	[AZ]
	0TG431C3AA	1			84			*K5	[C3]
		1			84			*P9	[C3]
	0UH851AZAA	1			84			*LJ	[AZ]
3									SEAT BACK, Rear, 60%
	0TG401AZAA	1			84			*K5	[AZ]
		1			84			*P9	[AZ]
	0TG401C3AA	1			84			*K5	[C3]
		1			84			*P9	[C3]
	0UH821AZAA	1			84			*LJ	[AZ]
4									COVER, Seat Back, 60%
	0TG421AZAA	1			84			*K5	[AZ]
		1			84			*P9	[AZ]
	0TG421C3AA	1			84			*P9	[C3]
		1			84			*K5	[C3]
	0UH841AZAA	1			84			*LJ	[AZ]
5									CUSHION, Rear Seat, 40%
	0TG491AZAA	1			84			*P9	[AZ]
		1			84			*K5	[AZ]
	0TG491C3AA	1			84			*P9	[C3]
		1			84			*K5	[C3]
	0UH891AZAA	1			84			*LJ	[AZ]
6									COVER, Rear Seat Cushion, 40%
	0TG471AZAA	1			84			*K5	[AZ]

DAKOTA (AN)

SERIES	LINE	BODY	ENGINE	TRANSMISSION
L = Quad Cab L = Regular Cab L = Club Cab	1 = Dakota 2WD 5 = Dakota 4WD	31 = CLUB CAB 2-DR 6.5 FT BOX 61 = REG CAB 6.5 FT BOX 84 = CREW CAB 4-DR W.B.1	EPO = 2.5L 4 Cyl. EHO = 3.9L 6 Cyl. EMO = 5.9L 8 Cyl. EVO = 4.7L Magnum EHC = 3.9L SMPI V6 EML = 5.9L V8 MPI Engine EPE = 2.5L POWER TECH I-4 Cyl. EVA = 4.7L V8 MPI	DDC = TRANSMISSION - 5-SPEED HD MANUAL DG4 = TRANSMISSION-MULTI-SPEED AUTO, 45RFE DGK = TRANSMISSION - 4-SPD. AUTOMATIC,42RE DGT = TRANSMISSION - 4-SPD. AUTOMATIC,46RE DGO = AUTO. TRANS.

AR = use ase required - = Non illustrrated part

Rear Seat, Quad Cab
Figure IAN-620

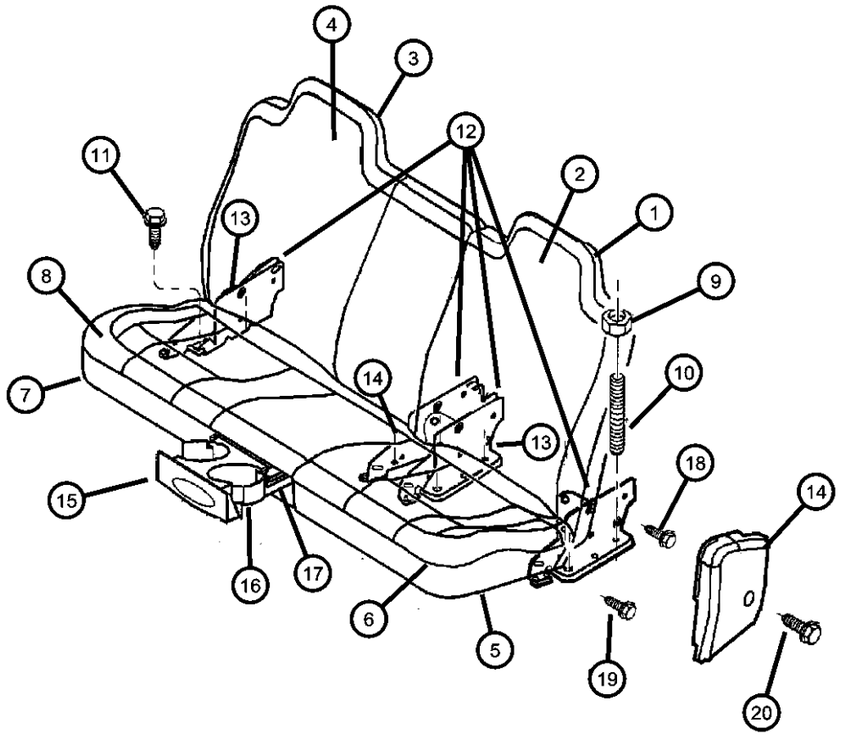

ITEM	PART NUMBER	QTY	LINE	SERIES	BODY	ENGINE	TRANS	TRIM	DESCRIPTION
		1			84			*P9	[AZ]
	0TG471C3AA	1			84			*P9	[C3]
		1			84			*K5	[C3]
	0UH871AZAA	1			84			*LJ	[AZ]
7									CUSHION, Rear Seat, 60%
	0TG481AZAA	1			84			*P9	[AZ]
		1			84			*K5	[AZ]
	0TG481C3AA	1			84			*P9	[C3]
		1			84			*K5	[C3]
	0UH881AZAA	1			84			*LJ	[AZ]
8									COVER, Rear Seat Cushion, 60%
	0TG461AZAA	1			84			*K5	[AZ]
		1			84			*P9	[AZ]
	0TG461C3AA	1			84			*P9	[C3]
		1			84			*K5	[C3]
	0UH861AZAA	1			84			*LJ	[AZ]
9	06101283	4							U-NUT, M8x1.25
10	06505800AA	4			84				STUD
11	06505913AA	4			84				SCREW
12									LATCH, Seat
	05015750AA	1			84			*P9	Inboard, 40% Seat
		1			84			*K5	Inboard, 40% Seat
		1			84			*LJ	Inboard, 40% Seat
	05015751AA	1			84			*P9	Outboard, 40% Seat
		1			84			*K5	Outboard, 40% Seat
		1			84			*LJ	Outboard, 40% Seat
	05015752AA	1			84			*P9	Outboard, 60% Seat
		1			84			*K5	Outboard, 60% Seat
		1			84			*LJ	Outboard, 60% Seat
	05015753AA	1			84			*P9	Inboard, 60% Seat
		1			84			*K5	Inboard, 60% Seat

DAKOTA (AN)

SERIES	LINE	BODY	ENGINE	TRANSMISSION
L = Quad Cab L = Regular Cab L = Club Cab	1 = Dakota 2WD 5 = Dakota 4WD	31 = CLUB CAB 2-DR 6.5 FT BOX 61 = REG CAB 6.5 FT BOX 84 = CREW CAB 4-DR W.B.1	EPO = 2.5L 4 Cyl. EHO = 3.9L 6 Cyl. EMO = 5.9L 8 Cyl. EVO = 4.7L Magnum EHC = 3.9L SMPI V6 EML = 5.9L V8 MPI Engine EPE = 2.5L POWER TECH I-4 Cyl. EVA = 4.7L V8 MPI	DDC = TRANSMISSION - 5-SPEED HD MANUAL DG4 = TRANSMISSION-MULTI-SPEED AUTO, 45RFE DGK = TRANSMISSION - 4-SPD. AUTOMATIC,42RE DGT = TRANSMISSION - 4-SPD. AUTOMATIC,46RE DGO = AUTO. TRANS.

Rear Seat, Quad Cab
Figure IAN-620

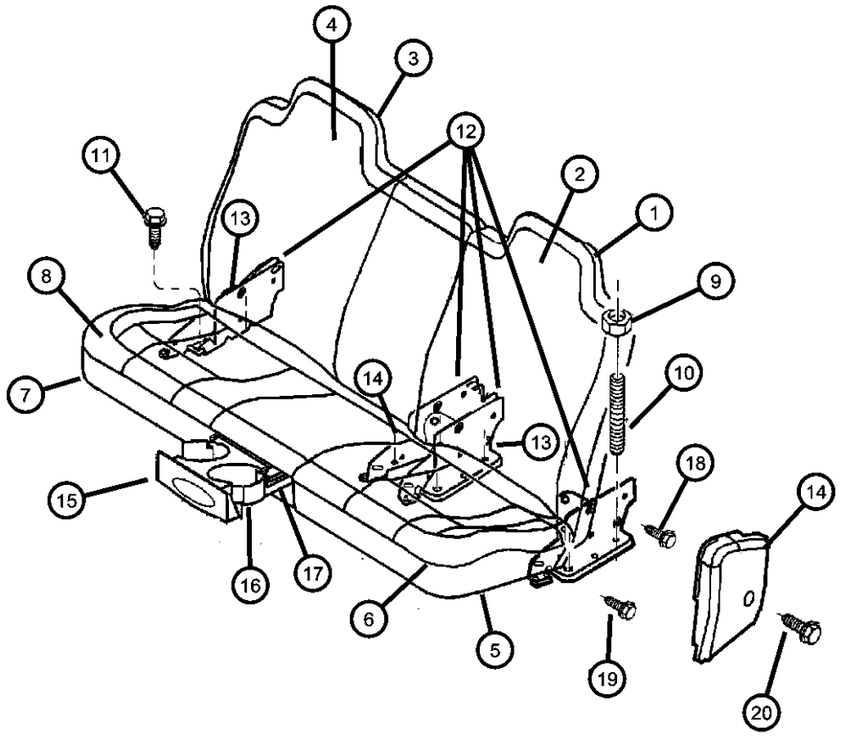

ITEM	PART NUMBER	QTY	LINE	SERIES	BODY	ENGINE	TRANS	TRIM	DESCRIPTION
		1			84			*LJ	Inboard, 60% Seat
13									COVER, Seat latch
	05015794AA	2			84			*K5	40% Inner, 60% Outer
		2			84			*P9	40% Inner, 60% Outer
		2			84			*LJ	40% Inner, 60% Outer
14									COVER, Seat latch
	05015795AA	2			84			*P9	40% Outer, 60% Inner
		2			84			*K5	40% Outer, 60% Inner
		2			84			*LJ	40% Outer, 60% Inner
15									FACE PLATE, Cupholder
	0TR281AZAA	1			84			*K5	[AZ]
		1			84			*P9	[AZ]
	0TR281C3AA	1			84			*K5	[C3]
		1			84			*P9	[C3]
16									HOUSING, Cup Holder
	05016907AA	1			84			*P9	Upper
		1			84			*K5	Upper
		1			84			*LJ	Upper
17									HOUSING, Cup Holder
	05016906AA	1			84			*P9	Lower
		1			84			*K5	Lower
		1			84			*LJ	Lower
18									BOLT, Shoulder
	05015817AA	4			84			*P9	
		4			84			*K5	
		4			84			*LJ	
19									SCREW, Tapping
	05015818AA	4			84			*P9	
		4			84			*K5	
		4			84			*LJ	
20									BOLT, Shoulder

DAKOTA (AN)

SERIES	LINE	BODY	ENGINE	TRANSMISSION
L = Quad Cab L = Regular Cab L = Club Cab	1 = Dakota 2WD 5 = Dakota 4WD	31 = CLUB CAB 2-DR 6.5 FT BOX 61 = REG CAB 6.5 FT BOX 84 = CREW CAB 4-DR W.B.1	EPO = 2.5L 4 Cyl. EHO = 3.9L 6 Cyl. EMO = 5.9L 8 Cyl. EVO = 4.7L Magnum EHC = 3.9L SMPI V6 EML = 5.9L V8 MPI Engine EPE = 2.5L POWER TECH I-4 Cyl. EVA = 4.7L V8 MPI	DDC = TRANSMISSION - 5-SPEED HD MANUAL DG4 = TRANSMISSION-MULTI-SPEED AUTO, 45RFE DGK = TRANSMISSION - 4-SPD. AUTOMATIC,42RE DGT = TRANSMISSION - 4-SPD. AUTOMATIC,46RE DGO = AUTO. TRANS.

Rear Seat, Quad Cab
Figure IAN-620

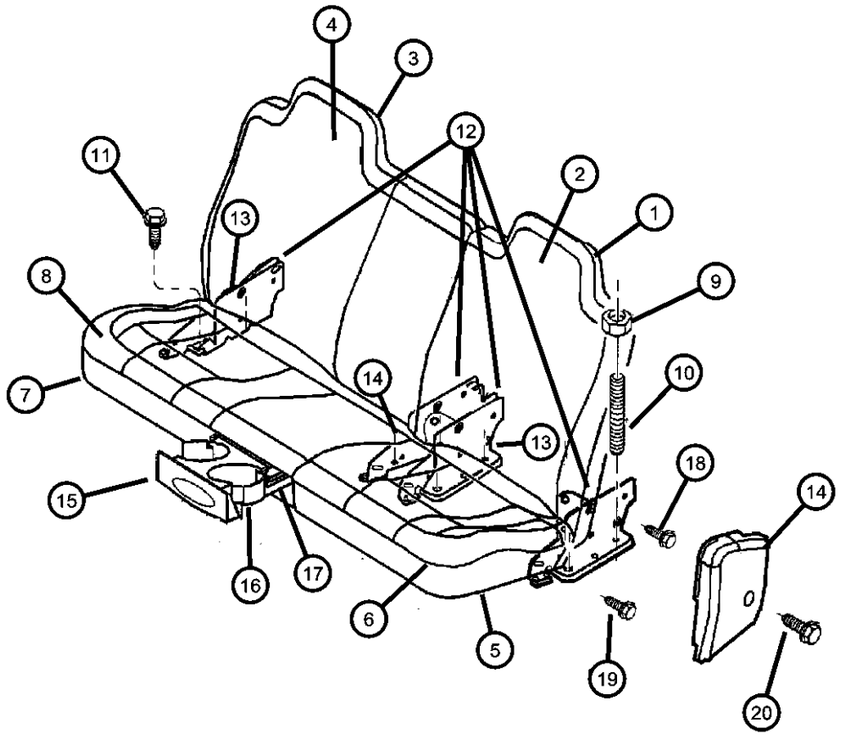

ITEM	PART NUMBER	QTY	LINE	SERIES	BODY	ENGINE	TRANS	TRIM	DESCRIPTION
	04883533AA	4			84			*P9	
		4			84			*K5	
		4			84			*LJ	

DAKOTA (AN)

SERIES	LINE	BODY	ENGINE	TRANSMISSION
L = Quad Cab L = Regular Cab L = Club Cab	1 = Dakota 2WD 5 = Dakota 4WD	31 = CLUB CAB 2-DR 6.5 FT BOX 61 = REG CAB 6.5 FT BOX 84 = CREW CAB 4-DR W.B.1	EPO = 2.5L 4 Cyl. EHO = 3.9L 6 Cyl. EMO = 5.9L 8 Cyl. EVO = 4.7L Magnum EHC = 3.9L SMPI V6 EML = 5.9L V8 MPI Engine EPE = 2.5L POWER TECH I-4 Cyl. EVA = 4.7L V8 MPI	DDC = TRANSMISSION - 5-SPEED HD MANUAL DG4 = TRANSMISSION-MULTI-SPEED AUTO, 45RFE DGK = TRANSMISSION - 4-SPD. AUTOMATIC,42RE DGT = TRANSMISSION - 4-SPD. AUTOMATIC,46RE DGO = AUTO. TRANS.

Belts, Front Seat, Standard & Club Cabs
Figure IAN-710

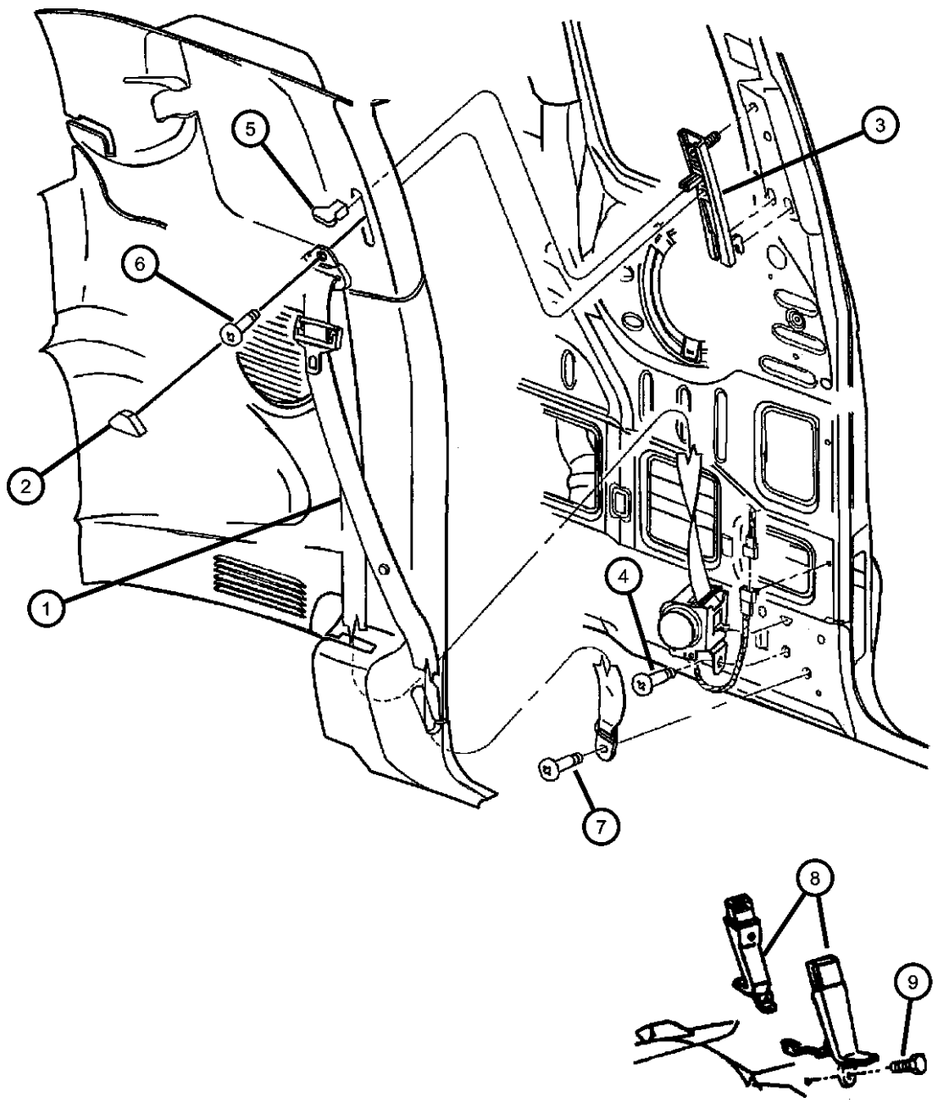

ITEM	PART NUMBER	QTY	LINE	SERIES	BODY	ENGINE	TRANS	TRIM	DESCRIPTION
1									SEAT BELT, Front Outer
	5GH58LAZAB	1			31, 61, 62			*O0	Right
	5GT08LAZAC	1			31, 61			*O0	Left
2	5GR26LAZAA	2						*O0	COVER, Adjustable Turning Loop
3	55361000AA	2							ADJUSTER, Seat Belt Turning Loop
4	06036108AA	2			31, 61				SCREW, Pan Head
5	55350849AA	2							KNOB, Seat Belt Adjuster
6	06505803AA	2							SCREW, Shoulder
7	06036109AA	2			31, 84				SCREW, Pan Head
8									SEAT BELT, Front Inner
	5DW201AZAB	1			61			*A2	Bench Seat, Includes Center Assembly, Right
		1			61			*G1	Bench Seat, Includes Center Assembly, Right
	5EX261AZAB	1			61			*P9	Center Buckle
		1			31			*P9	Center Buckle
	5EX27LAZ	1			61			*P9	Center Tip
		1			31			*P9	Center Tip
	5GK301AZAB	2			31			*P9	Inboard
		2			61			*P9	Inboard
		2			61			*K5	Inboard
		2			31			*K5	Inboard
	5GN231AZAB	1			61			*A2	Bench Seat, Includes Center Assembly, Left
		1			61			*G1	Bench Seat, Includes Center Assembly, Left
9									BOLT, Seat Belt Anchor
	04746341	2			61			*P9	
		2			61			*K5	
		2			31			*P9	
		2			31			*K5	
		1			61			*A2	
		1			61			*G1	
-10	04740415	1							EXTENDER, Seat Belt

DAKOTA (AN)

SERIES	LINE	BODY	ENGINE	TRANSMISSION
L = Quad Cab L = Regular Cab L = Club Cab	1 = Dakota 2WD 5 = Dakota 4WD	31 = CLUB CAB 2-DR 6.5 FT BOX 61 = REG CAB 6.5 FT BOX 84 = CREW CAB 4-DR W.B.1	EPO = 2.5L 4 Cyl. EHO = 3.9L 6 Cyl. EMO = 5.9L 8 Cyl. EVO = 4.7L Magnum EHC = 3.9L SMPI V6 EML = 5.9L V8 MPI Engine EPE = 2.5L POWER TECH I-4 Cyl. EVA = 4.7L V8 MPI	DDC = TRANSMISSION - 5-SPEED HD MANUAL DG4 = TRANSMISSION-MULTI-SPEED AUTO, 45RFE DGK = TRANSMISSION - 4-SPD. AUTOMATIC,42RE DGT = TRANSMISSION - 4-SPD. AUTOMATIC,46RE DGO = AUTO. TRANS.

Belts, Front Seat, 4 Door
Figure IAN-715

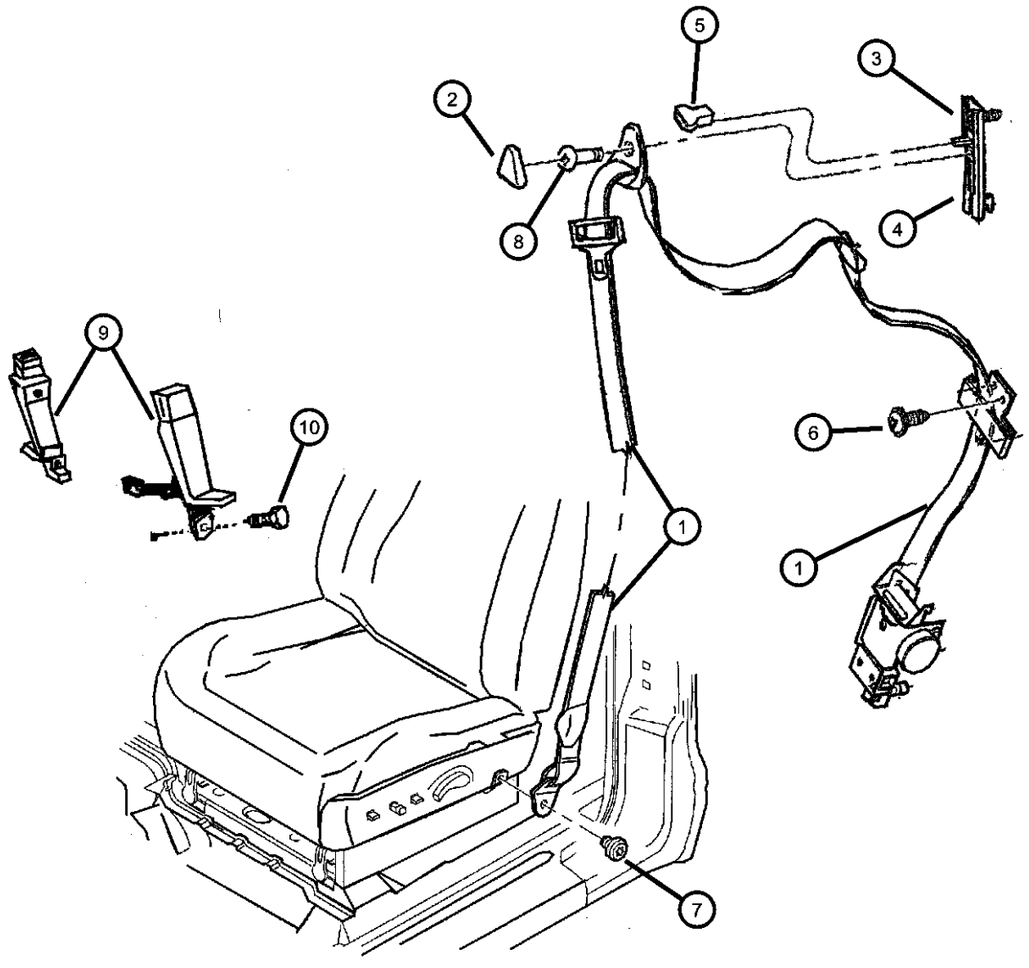

ITEM	PART NUMBER	QTY	LINE	SERIES	BODY	ENGINE	TRANS	TRIM	DESCRIPTION
1									SEAT BELT, Front Outer
	5GD00LAZAB	1			84			*O0	Right
	5GD01LAZAB	1			84			*O0	Left
2	5GR26LAZAA	2						*O0	COVER, Adjustable Turning Loop
3	55361000AA	2							ADJUSTER, Seat Belt Turning Loop
4									ADJUSTER, Seat Belt Turning Loop
	0UC38LAZAA	1			84			*O0	[AZ
	0UC38RC3AA	1			84			*O0	[C3]
5	55350849AA	2							KNOB, Seat Belt Adjuster
6	J4004642	4			84				SCREW, Round Head, .164-18x.560
7	06036347AA	2			84				BOLT, Seat Belt Anchor
8	06505803AA	2							SCREW, Shoulder
9									SEAT BELT, Front Inner
	0QP481AZAA	1			84			*P9	Center, Right
	0QP491AZAA	1			84			*P9	Center, Left
	5GK301AZAB	2			84			*K5	Inboard
		2			84			*P9	Inboard
		2			84			*LJ	Inboard
10									BOLT, Seat Belt Anchor
	04746341	4			84			*P9	
		2			84			*K5	
		2			84			*LJ	
-11	04740415	1							EXTENDER, Seat Belt

DAKOTA (AN)

SERIES	LINE	BODY	ENGINE	TRANSMISSION
L = Quad Cab L = Regular Cab L = Club Cab	1 = Dakota 2WD 5 = Dakota 4WD	31 = CLUB CAB 2-DR 6.5 FT BOX 61 = REG CAB 6.5 FT BOX 84 = CREW CAB 4-DR W.B.1	EPO = 2.5L 4 Cyl. EHO = 3.9L 6 Cyl. EMO = 5.9L 8 Cyl. EVO = 4.7L Magnum EHC = 3.9L SMPI V6 EML = 5.9L V8 MPI Engine EPE = 2.5L POWER TECH I-4 Cyl. EVA = 4.7L V8 MPI	DDC = TRANSMISSION - 5-SPEED HD MANUAL DG4 = TRANSMISSION-MULTI-SPEED AUTO, 45RFE DGK = TRANSMISSION - 4-SPD. AUTOMATIC,42RE DGT = TRANSMISSION - 4-SPD. AUTOMATIC,46RE DGO = AUTO. TRANS.

Belts, Rear Seat and Tethers
Figure IAN-720

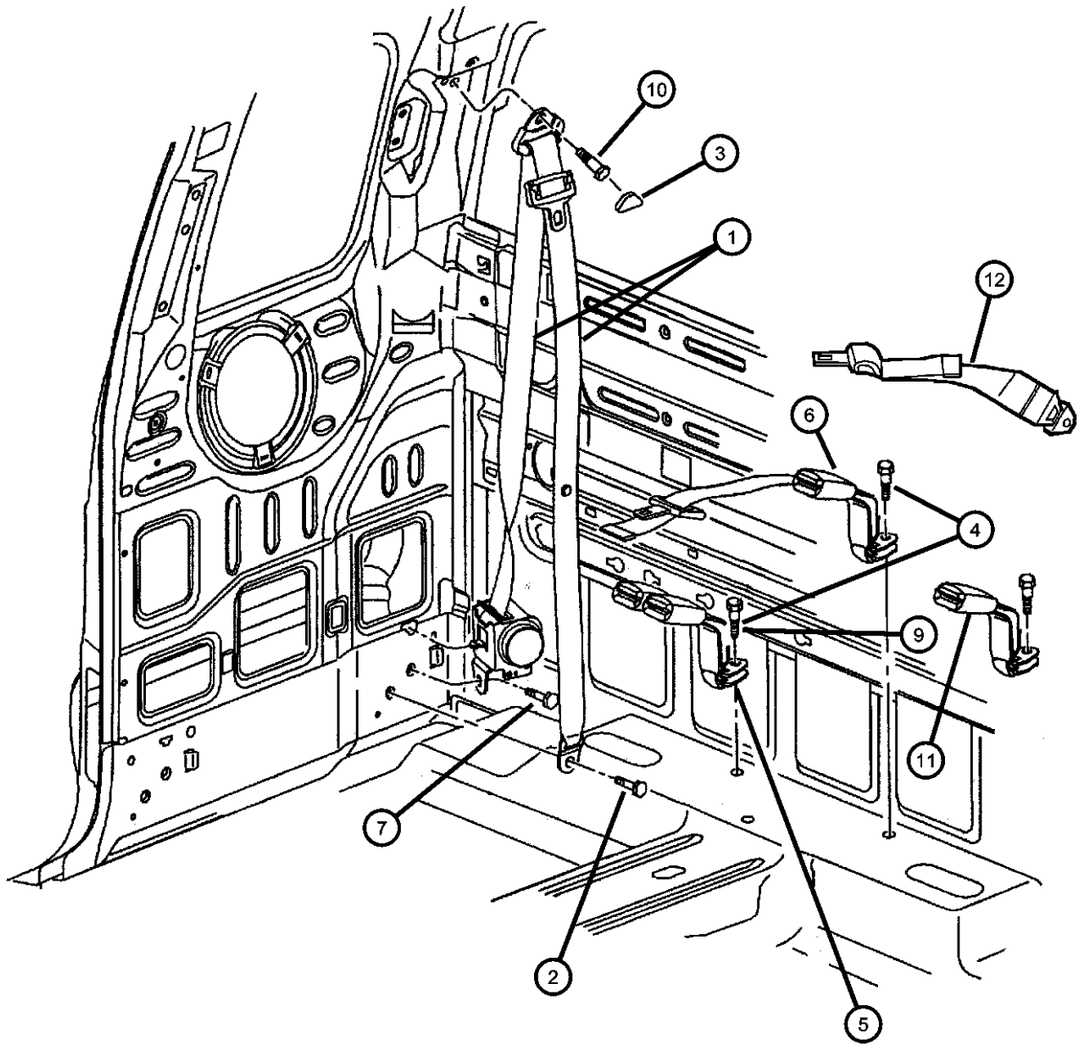

ITEM	PART NUMBER	QTY	LINE	SERIES	BODY	ENGINE	TRANS	TRIM	DESCRIPTION
1	5GD02LAZAA	2			31, 84			*O0	SEAT BELT, RearRight & Left, Outboard
2	06036109AA	2			31, 84				SCREW, Pan Head
3	5GR26LAZAA	2						*O0	COVER, Adjustable Turning Loop
4	06504847AA	1			31			*O0	SCREW, Also Included in Seat Belt
5									SEAT BELT, Rear Inner
	5DW281AZAB	1			31			*O0	Right
	5GK641AZAB	1			84			*O0	Right
6	5DW291AZAB	1			31			*O0	SEAT BELT, Rear InnerLeft
7									SCREW, Pan Head
	06036108AA	2			31, 61				
		2			31, 84				
-8	04740415	1							EXTENDER, Seat Belt
9	06505993AA	1			84			*O0	BOLT, Seat Belt
10									BOLT
	06036348AA	2			31				
		2			84				
11									SEAT BELT, Rear Inner
	5GU991AZAB	1			84			*P9	Buckle to Seat, Inboard, Left
		1			84			*K5	Buckle to Seat, Inboard, Left
	5GU991AZAC	1			84			*LJ	Inboard, Left
12									SEAT BELT, Rear Inner
	5GK631AZAA	1			84			*K5	Inboard, Left
		1			84			*P9	Inboard, Left
		1			84			*LJ	Inboard, Left
-13									ANCHOR PACKAGE, Child Seat Tether
	05016572AA	1			31				
	05016573AA	1			84				
	05017683AA	1			61				

DAKOTA (AN)

SERIES	LINE	BODY	ENGINE	TRANSMISSION
L = Quad Cab L = Regular Cab L = Club Cab	1 = Dakota 2WD 5 = Dakota 4WD	31 = CLUB CAB 2-DR 6.5 FT BOX 61 = REG CAB 6.5 FT BOX 84 = CREW CAB 4-DR W.B.1	EPO = 2.5L 4 Cyl. EHO = 3.9L 6 Cyl. EMO = 5.9L 8 Cyl. EVO = 4.7L Magnum EHC = 3.9L SMPI V6 EML = 5.9L V8 MPI Engine EPE = 2.5L POWER TECH I-4 Cyl. EVA = 4.7L V8 MPI	DDC = TRANSMISSION - 5-SPEED HD MANUAL DG4 = TRANSMISSION-MULTI-SPEED AUTO, 45RFE DGK = TRANSMISSION - 4-SPD. AUTOMATIC,42RE DGT = TRANSMISSION - 4-SPD. AUTOMATIC,46RE DGO = AUTO. TRANS.

Adjuster And Attaching Parts
Figure IAN-810

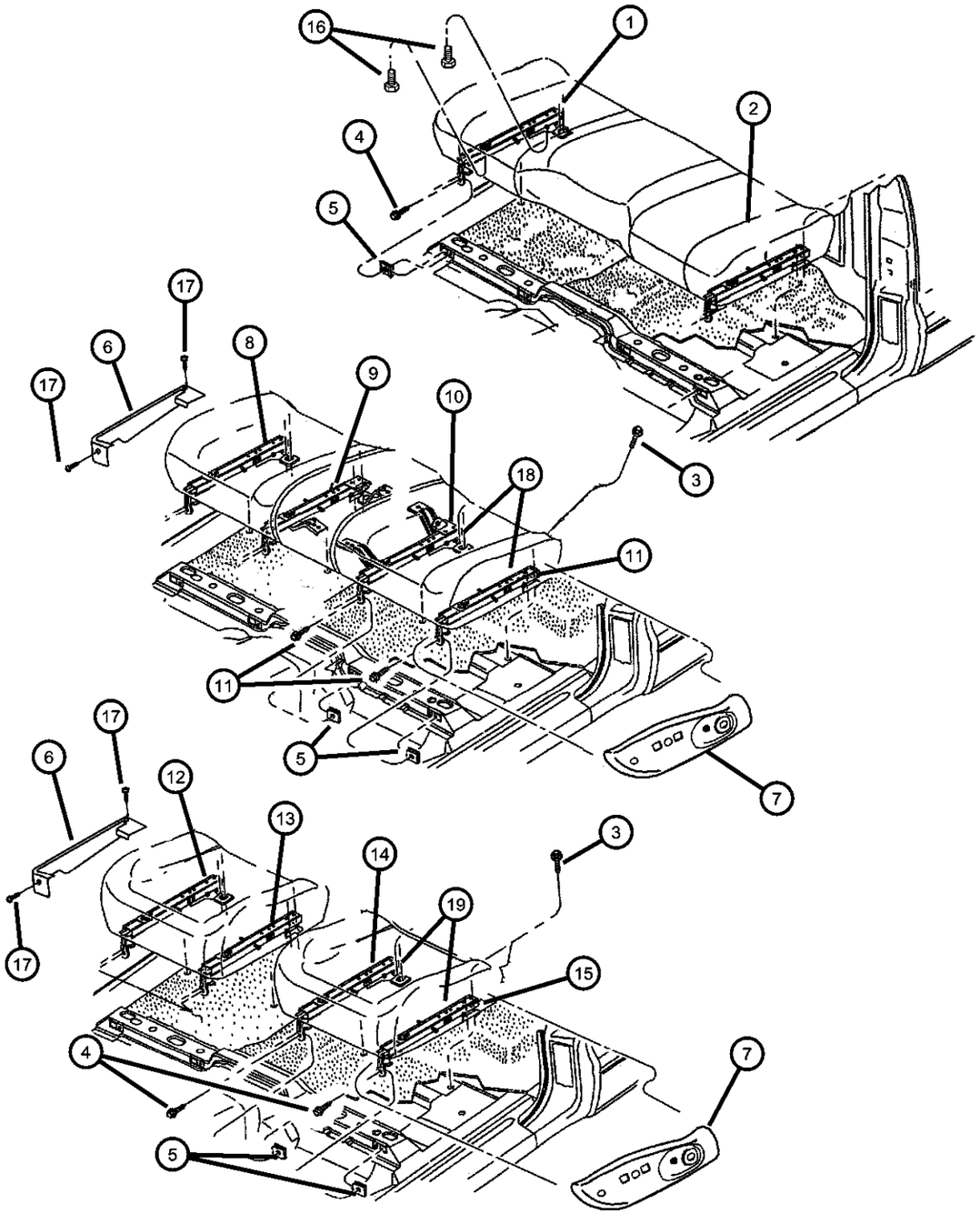

ITEM	PART NUMBER	QTY	LINE	SERIES	BODY	ENGINE	TRANS	TRIM	DESCRIPTION
1									ADJUSTER, Manual Seat
	05016624AA	1			61			*A2	Passenger, Outboard
		1			61			*G1	Passenger, Outboard
2									ADJUSTER, Manual Seat
	05016625AA	1			61			*A2	Driver, Outboard
		1			61			*G1	Driver, Outboard
3	06505381AA	4							SCREW AND WASHER, Hex Head
4	06500664	4							SCREW AND WASHER, Hex Head, M8x1.25x35
5	06101283	4							U-NUT, M8x1.25, M8x1.25
6									COVER, Seat Adjuster
	5DZ26LAZAB	1			31			*O0	[AZ], Right, Manual, Front Seat
	5DZ26RC3AB	1			31			*O0	[C3], Right, Manual, Front Seat
7									SHIELD, Seat Cushion
	0RN901AZAA	1			31			*K5	[AZ], Left, Power Seat
		1			31			*P9	[AZ], Left, Power Seat
	0RN901C3AA	1			31			*K5	[C3], Left, Power Seat
		1			31			*P9	[C3], Left, Power Seat
	0TF851AZAA	1			84			*P9	[AZ], Left, Power Seat
		1			84			*K5	[AZ], Left, Power Seat
		1			84			*LJ	[AZ], Left, Power Seat
	0TF851C3AA	1			84			*P9	[C3], Left, Power Seat
		1			84			*K5	[C3], Left, Power Seat
8									ADJUSTER, Manual Seat
	05015628AA	1			84			*P9	40/20/40 Seat, Passenger Outboard
	05016624AA	1			61			*P9	40/20/40 Seat, Passenger Outboard
	05016626AA	1			31			*P9	40/20/40 Seat, Passenger Outboard
9									ADJUSTER, Manual Seat
	05012486AA	1			61			*P9	40/20/40 Seat, Passenger, Inboard
	05012494AA	1			31			*P9	40/20/40 Seat, Passenger, Inboard

DAKOTA (AN)

SERIES	LINE	BODY	ENGINE	TRANSMISSION
L = Quad Cab L = Regular Cab L = Club Cab	1 = Dakota 2WD 5 = Dakota 4WD	31 = CLUB CAB 2-DR 6.5 FT BOX 61 = REG CAB 6.5 FT BOX 84 = CREW CAB 4-DR W.B.1	EPO = 2.5L 4 Cyl. EHO = 3.9L 6 Cyl. EMO = 5.9L 8 Cyl. EVO = 4.7L Magnum EHC = 3.9L SMPI V6 EML = 5.9L V8 MPI Engine EPE = 2.5L POWER TECH I-4 Cyl. EVA = 4.7L V8 MPI	DDC = TRANSMISSION - 5-SPEED HD MANUAL DG4 = TRANSMISSION-MULTI-SPEED AUTO, 45RFE DGK = TRANSMISSION - 4-SPD. AUTOMATIC,42RE DGT = TRANSMISSION - 4-SPD. AUTOMATIC,46RE DGO = AUTO. TRANS.

Adjuster And Attaching Parts
Figure IAN-810

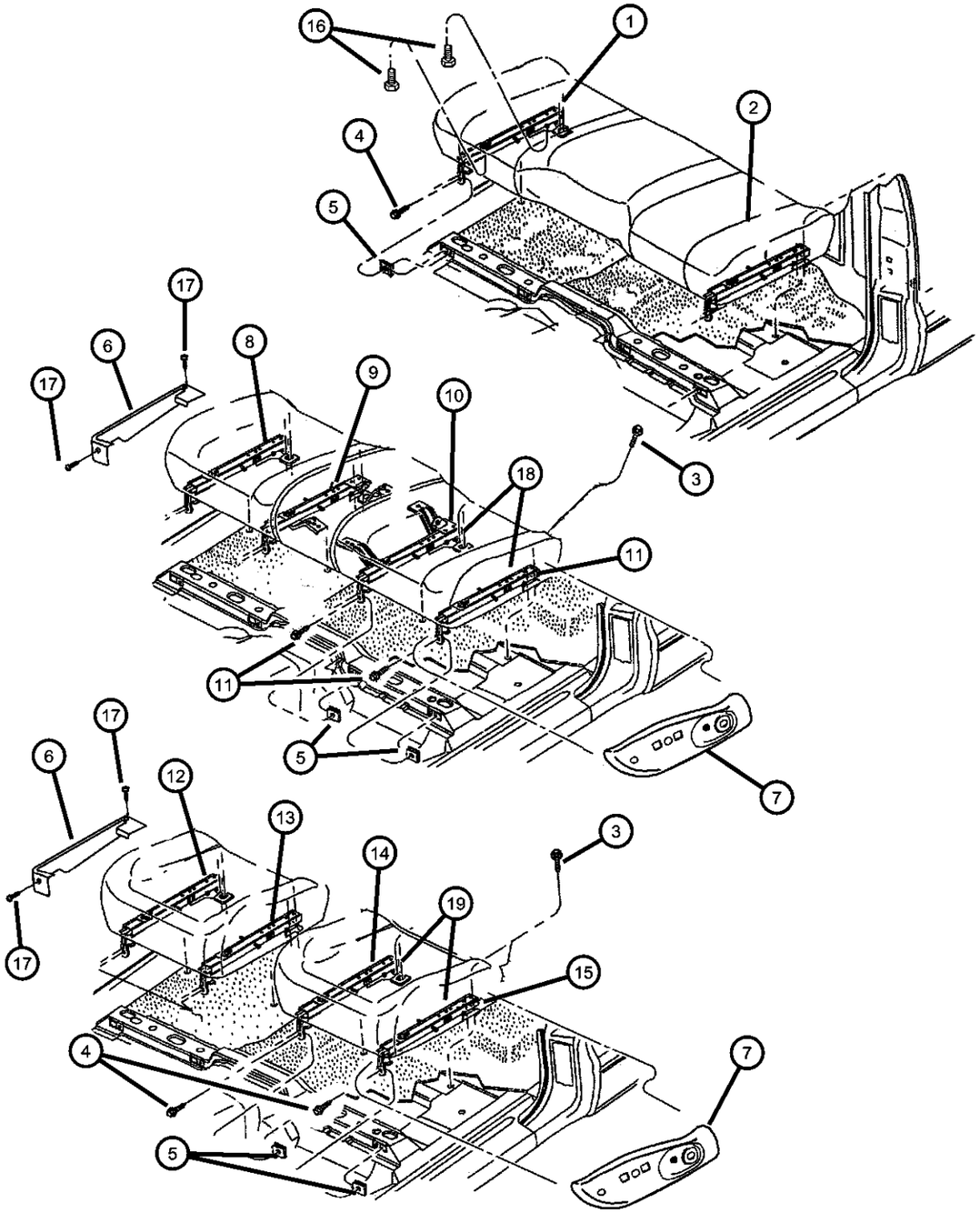

ITEM	PART NUMBER	QTY	LINE	SERIES	BODY	ENGINE	TRANS	TRIM	DESCRIPTION
	05015631AA	1			84			*P9	40/20/40 Seat, Passenger, Inboard
10									ADJUSTER, Manual Seat
	05012485AA	1			61			*P9	40/20/40 Seat, Driver, Inboard
	05012493AA	1			31			*P9	40/20/40 Seat, Driver, Inboard
	05015630AA	1			84			*P9	40/20/40 Seat, Driver, Inboard
11									ADJUSTER, Manual Seat
	05015629AA	1			84			*P9	40/20/40 Seat, Driver, Outboard
	05016625AA	1			61			*P9	40/20/40 Seat, Driver, Outboard
	05016627AA	1			31			*P9	40/20/40 Seat, Driver, Outboard
12									ADJUSTER, Manual Seat
	05015628AA	1			84			*K5	Bucket Seats, Passenger, Outboard
	05016598AA	1			84			*LJ	Bucket Seats, Passenger, Outboard
	05016624AA	1			61			*K5	Bucket Seats, Passenger, Outboard
	05016626AA	1			31			*K5	Bucket Seats, With Easy Entry, Passenger, Outboard
13									ADJUSTER, Manual Seat
	05015629AA	1			84			*K5	Bucket Seats, Passenger, Inboard
	05016599AA	1			84			*LJ	Bucket Seats, Passenger, Inboard
	05016619AA	1			31			*K5	Bucket Seats, Passenger, Inboard
	05016623AA	1			61			*K5	Bucket Seats, Passenger, Inboard
14									ADJUSTER, Manual Seat
	05015628AA	1			84			*K5	Bucket Seats, Driver, Inboard
	05016618AA	1			31			*K5	Bucket Seats, Driver, Inboard
	05016622AA	1			61			*K5	Bucket Seats, Driver, Inboard
15									ADJUSTER, Manual Seat
	05015629AA	1			84			*K5	Bucket Seats, Driver, Outboard
	05016625AA	1			61			*K5	Bucket Seats, Driver, Outboard
	05016627AA	1			31			*K5	Bucket Seats, Driver, Outboard
16									BOLT, M8x1.25x25

DAKOTA (AN)

SERIES	LINE	BODY	ENGINE	TRANSMISSION
L = Quad Cab L = Regular Cab L = Club Cab	1 = Dakota 2WD 5 = Dakota 4WD	31 = CLUB CAB 2-DR 6.5 FT BOX 61 = REG CAB 6.5 FT BOX 84 = CREW CAB 4-DR W.B.1	EPO = 2.5L 4 Cyl. EHO = 3.9L 6 Cyl. EMO = 5.9L 8 Cyl. EVO = 4.7L Magnum EHC = 3.9L SMPI V6 EML = 5.9L V8 MPI Engine EPE = 2.5L POWER TECH I-4 Cyl. EVA = 4.7L V8 MPI	DDC = TRANSMISSION - 5-SPEED HD MANUAL DG4 = TRANSMISSION-MULTI-SPEED AUTO, 45RFE DGK = TRANSMISSION - 4-SPD. AUTOMATIC,42RE DGT = TRANSMISSION - 4-SPD. AUTOMATIC,46RE DGO = AUTO. TRANS.

Adjuster And Attaching Parts
Figure IAN-810

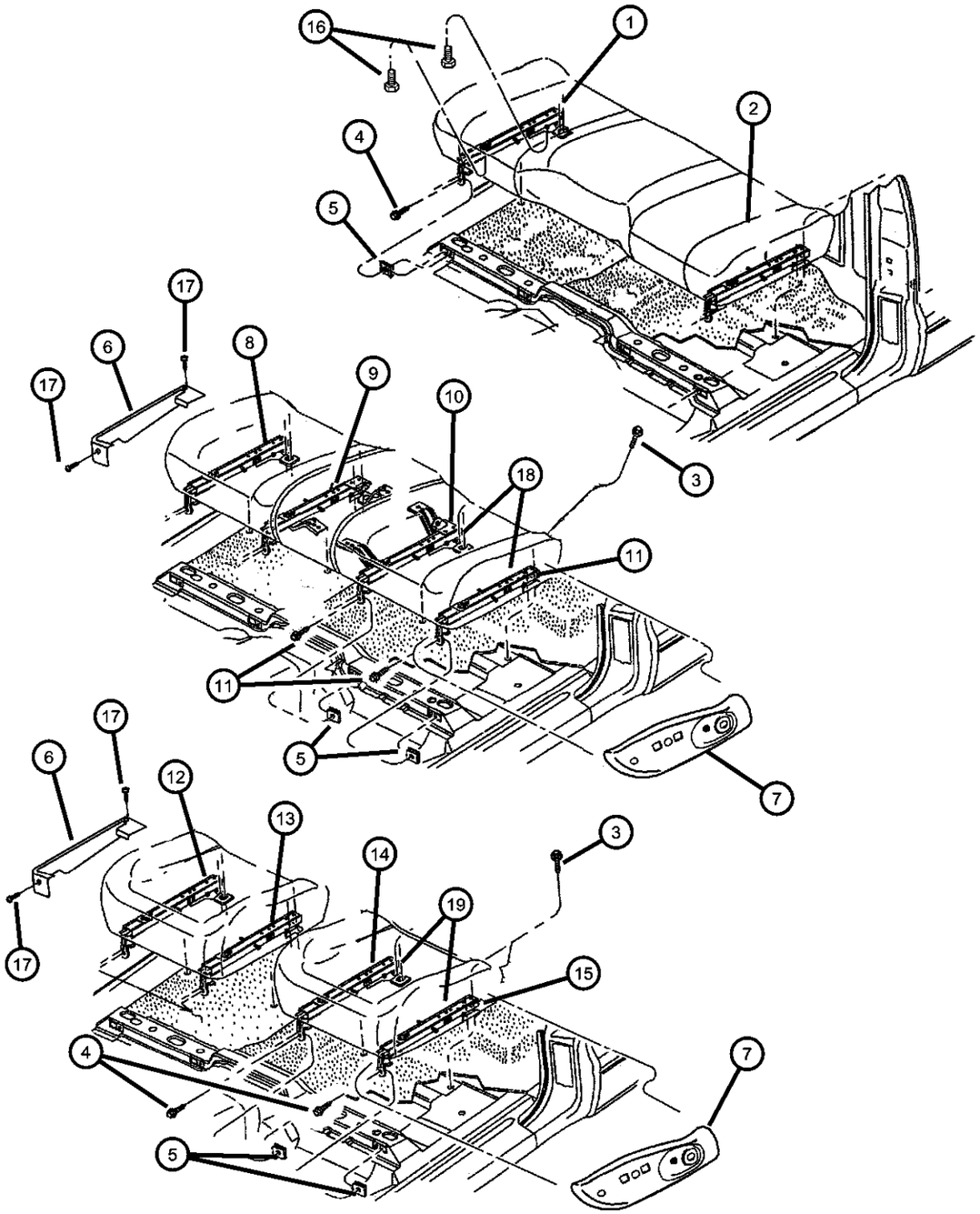

ITEM	PART NUMBER	QTY	LINE	SERIES	BODY	ENGINE	TRANS	TRIM	DESCRIPTION
	04883540AA	10			61			*P9	
		8			61			*K5	
		10			31			*P9	
		8			31			*K5	
		1			61			*A2	
		1			61			*G1	
		1			84			*LJ	
17	06505030AA	2			31				SCREW
18									ADJUSTER, Power Seat
	05012532AA	1			31			*P9	40/20/40 Seat
	05015633AA	1			84			*P9	
19									ADJUSTER, Power Seat
	05015632AA	1			84			*K5	Bucket Seats, Driver
	05016621AA	1			31			*K5	Bucket Seats, Driver
	05017808AA	1			84			*LJ	Bucket Seats, Driver

DAKOTA (AN)

SERIES	LINE	BODY	ENGINE	TRANSMISSION
L = Quad Cab	1 = Dakota 2WD	31 = CLUB CAB 2-DR 6.5 FT BOX	EPO = 2.5L 4 Cyl.	DDC = TRANSMISSION - 5-SPEED HD MANUAL
L = Regular Cab	5 = Dakota 4WD	61 = REG CAB 6.5 FT BOX	EHO = 3.9L 6 Cyl.	DG4 = TRANSMISSION-MULTI-SPEED AUTO, 45RFE
L = Club Cab		84 = CREW CAB 4-DR W.B.1	EMO = 5.9L 8 Cyl.	DGK = TRANSMISSION - 4-SPD. AUTOMATIC,42RE
			EVO = 4.7L Magnum	DGT = TRANSMISSION - 4-SPD. AUTOMATIC,46RE
			EHC = 3.9L SMPI V6	DGO = AUTO. TRANS.
			EML = 5.9L V8 MPI Engine	
			EPE = 2.5L POWER TECH I-4 Cyl.	
			EVA = 4.7L V8 MPI	

Handles, Lock Bar And Attaching Parts
Figure IAN-820

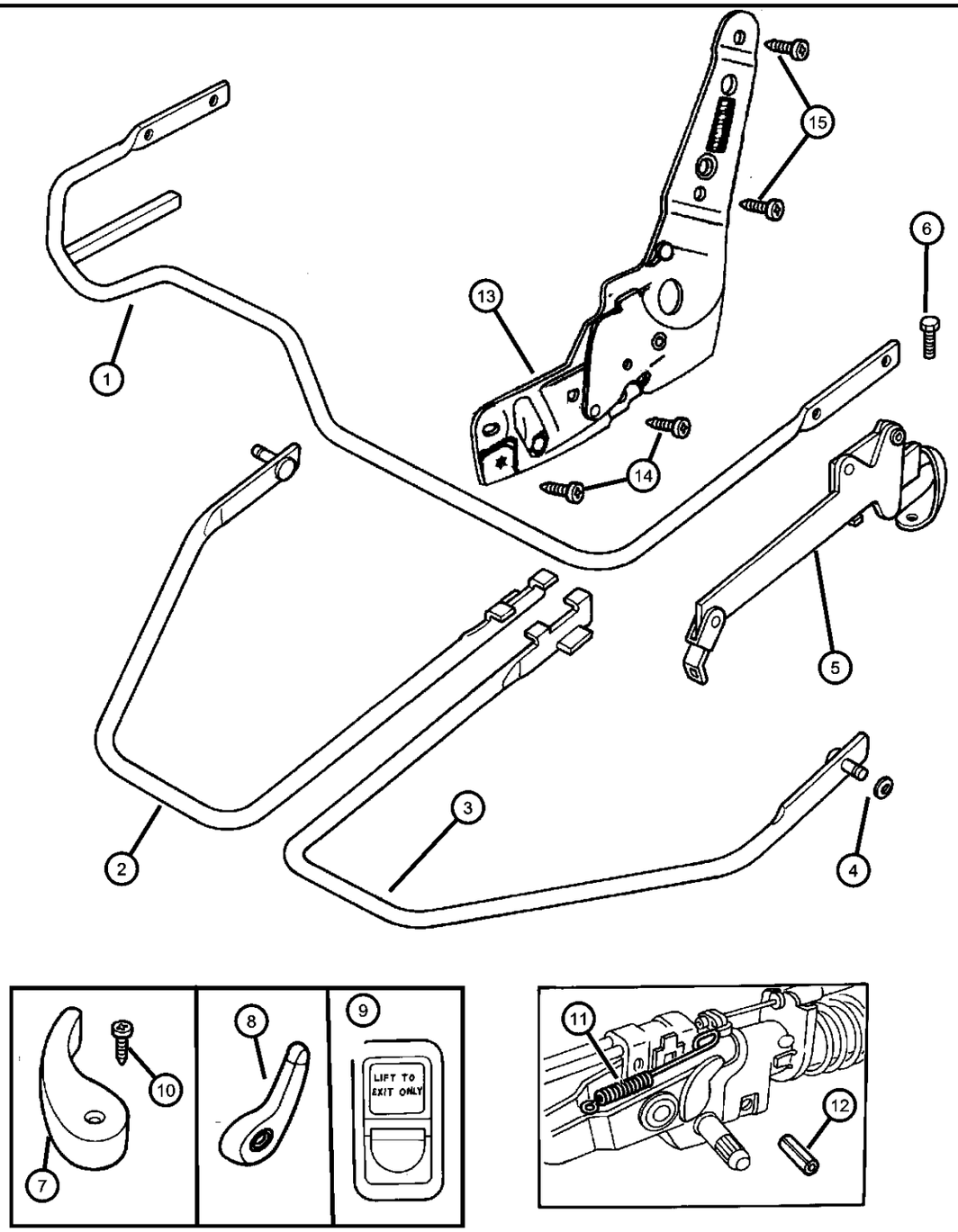

ITEM	PART NUMBER	QTY	LINE	SERIES	BODY	ENGINE	TRANS	TRIM	DESCRIPTION
Recliner for Split Bench and Bucket seats are serviced in seat cushion.									
1									HANDLE, Seat Release
	04883485AA	1			61, 62			*A2	
		1			61, 62			*G1	
		1			61			*A2	Towel Bar
		1			61			*G1	Towel Bar
2									HANDLE, Seat Release
	04883486AA	1			61			*P9	Towel Bar, Passenger
		1			61			*K5	Towel Bar, Passenger
		1			31			*P9	Towel Bar, Passenger
		1			31			*K5	Towel Bar, Passenger
		1			84			*P9	Towel Bar, Passenger
		1			84			*K5	Towel Bar, Passenger
		1			84			*LJ	Towel Bar, Passenger
3									HANDLE, Seat Release
	04883487AA	1			61			*P9	Towel Bar, Driver
		1			61			*K5	Towel Bar, Driver
		1			31			*P9	Towel Bar, Driver
		1			31			*K5	Towel Bar, Driver
		1			84			*P9	Towel Bar, Driver
		1			84			*K5	Towel Bar, Driver
4									NUT, Push On, M6
	04883539AA	4			61			*P9	
		4			61			*K5	
		4			31			*P9	
		4			31			*K5	
		4			84			*P9	
		4			84			*K5	
		1			61			*A2	
		1			61			*G1	
		1			84			*LJ	
5									LOCK BAR, Seat Belt

DAKOTA (AN)

SERIES	LINE	BODY	ENGINE	TRANSMISSION
L = Quad Cab L = Regular Cab L = Club Cab	1 = Dakota 2WD 5 = Dakota 4WD	31 = CLUB CAB 2-DR 6.5 FT BOX 61 = REG CAB 6.5 FT BOX 84 = CREW CAB 4-DR W.B.1	EPO = 2.5L 4 Cyl. EHO = 3.9L 6 Cyl. EMO = 5.9L 8 Cyl. EVO = 4.7L Magnum EHC = 3.9L SMPI V6 EML = 5.9L V8 MPI Engine EPE = 2.5L POWER TECH I-4 Cyl. EVA = 4.7L V8 MPI	DDC = TRANSMISSION - 5-SPEED HD MANUAL DG4 = TRANSMISSION-MULTI-SPEED AUTO, 45RFE DGK = TRANSMISSION - 4-SPD. AUTOMATIC,42RE DGT = TRANSMISSION - 4-SPD. AUTOMATIC,46RE DGO = AUTO. TRANS.

AR = use ase required - = Non illustrrated part

Handles, Lock Bar And Attaching Parts
Figure IAN-820

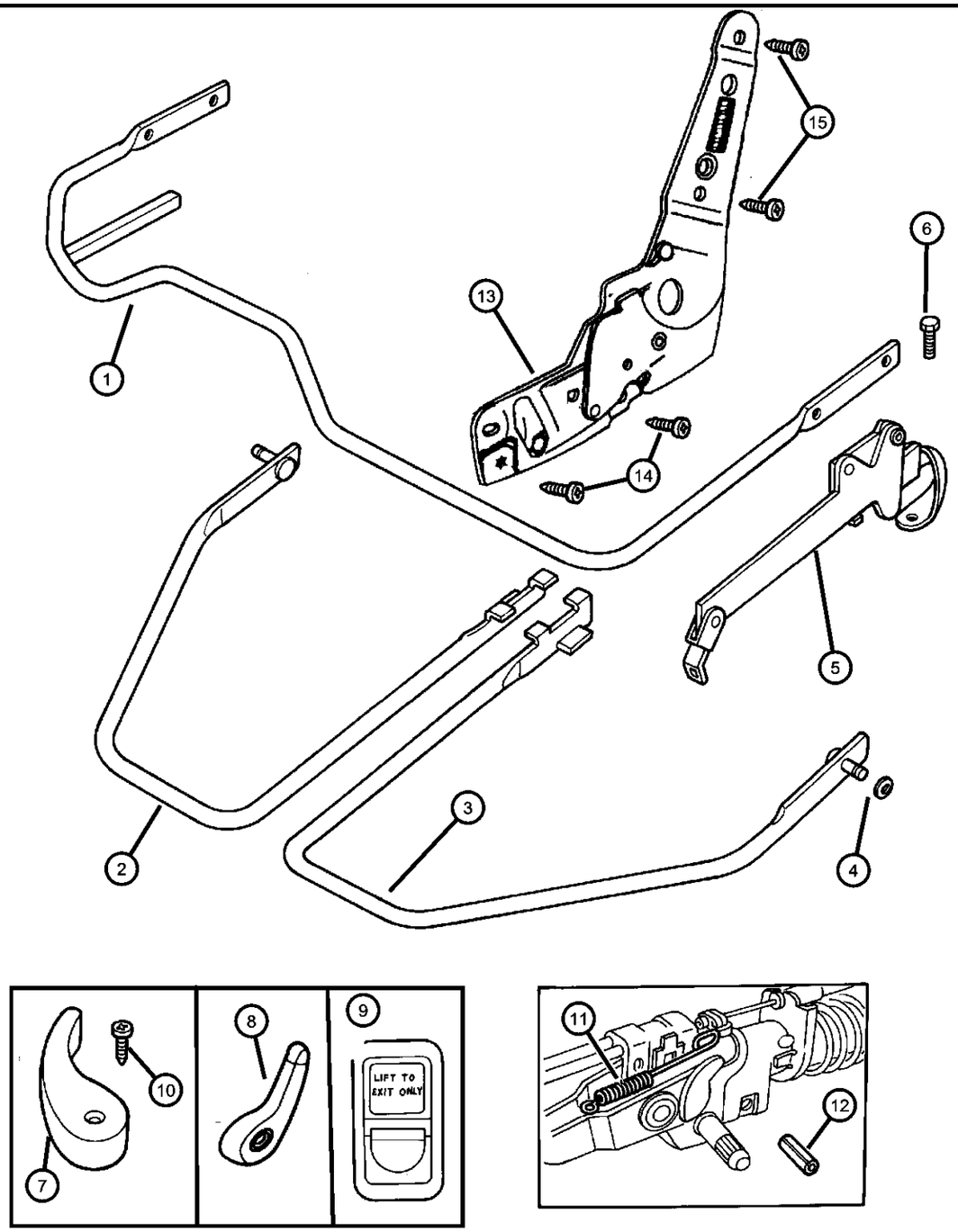

ITEM	PART NUMBER	QTY	LINE	SERIES	BODY	ENGINE	TRANS	TRIM	DESCRIPTION
	04883492AA	1			61			*A2	Right
		1			61			*G1	Right
	04883493AA	1			61			*A2	Left
		1			61			*G1	Left
6									BOLT, Seat Belt Anchor
	04746341	2			61			*P9	
		2			61			*K5	
		2			31			*P9	
		2			31			*K5	
		2			84			*K5	
		4			84			*P9	
		1			61			*A2	
		1			61			*G1	
		2			84			*LJ	
7									HANDLE, Seat Recliner
	05012304AA	1			61			*P9	Right
		1			61			*K5	Right
		1			31			*P9	Right
		1			31			*K5	Right
		1			84			*P9	Right
		1			84			*K5	Right
		1			84			*LJ	Right
	05012305AA	1			61			*P9	Left
		1			61			*K5	Left
		1			31			*P9	Left
		1			31			*K5	Left
		1			84			*P9	Left
		1			84			*K5	Left
		1			84			*LJ	Left
8									HANDLE, Lumbar
	04797891	1			31			*K5	

DAKOTA (AN)

SERIES	LINE	BODY	ENGINE	TRANSMISSION
L = Quad Cab L = Regular Cab L = Club Cab	1 = Dakota 2WD 5 = Dakota 4WD	31 = CLUB CAB 2-DR 6.5 FT BOX 61 = REG CAB 6.5 FT BOX 84 = CREW CAB 4-DR W.B.1	EPO = 2.5L 4 Cyl. EHO = 3.9L 6 Cyl. EMO = 5.9L 8 Cyl. EVO = 4.7L Magnum EHC = 3.9L SMPI V6 EML = 5.9L V8 MPI Engine EPE = 2.5L POWER TECH I-4 Cyl. EVA = 4.7L V8 MPI	DDC = TRANSMISSION - 5-SPEED HD MANUAL DG4 = TRANSMISSION-MULTI-SPEED AUTO, 45RFE DGK = TRANSMISSION - 4-SPD. AUTOMATIC,42RE DGT = TRANSMISSION - 4-SPD. AUTOMATIC,46RE DGO = AUTO. TRANS.

Handles, Lock Bar And Attaching Parts
Figure IAN-820

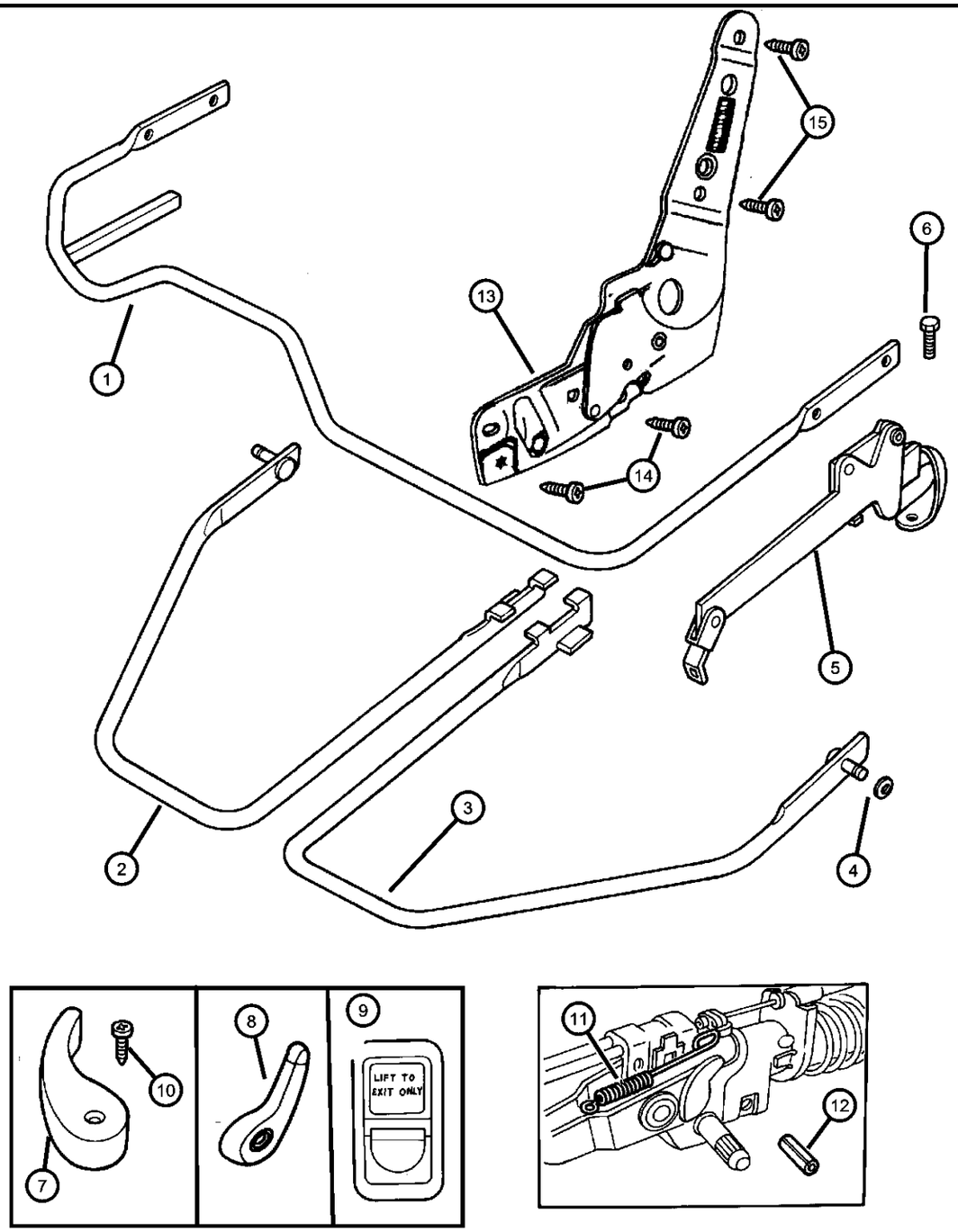

ITEM	PART NUMBER	QTY	LINE	SERIES	BODY	ENGINE	TRANS	TRIM	DESCRIPTION
		1			31			*P9	
		1			84			*P9	
		1			84			*K5	
		1			84			*LJ	
9									LEVER, Seat Latch Release
	04883571AA	2			31			*P9	
		2			31			*K5	
10									SCREW, Recliner Handle
	05011634AA	2			61			*P9	
		2			31			*P9	
		2			84			*P9	
		2			84			*K5	
		2			61			*K5	
		2			31			*K5	
		2			84			*LJ	
11									SPRING, Seat Latch Return
	04883532AA	1			31			*P9	
		1			31			*K5	
12									PIN, Roll
	04883677AA	4			61			*P9	
		4			61			*K5	
		4			31			*P9	
		4			31			*K5	
		4			84			*P9	
		4			84			*K5	
		4			84			*LJ	
13									LATCH, Seat
	04883794AA	1			61			*A2	With Bench Seat, Right
		1			61			*G1	With Bench Seat, Right
	04883795AA	1			61			*A2	With Bench Seat, Left
		1			61			*G1	With Bench Seat, Left

DAKOTA (AN)

SERIES	LINE	BODY	ENGINE	TRANSMISSION
L = Quad Cab L = Regular Cab L = Club Cab	1 = Dakota 2WD 5 = Dakota 4WD	31 = CLUB CAB 2-DR 6.5 FT BOX 61 = REG CAB 6.5 FT BOX 84 = CREW CAB 4-DR W.B.1	EPO = 2.5L 4 Cyl. EHO = 3.9L 6 Cyl. EMO = 5.9L 8 Cyl. EVO = 4.7L Magnum EHC = 3.9L SMPI V6 EML = 5.9L V8 MPI Engine EPE = 2.5L POWER TECH I-4 Cyl. EVA = 4.7L V8 MPI	DDC = TRANSMISSION - 5-SPEED HD MANUAL DG4 = TRANSMISSION-MULTI-SPEED AUTO, 45RFE DGK = TRANSMISSION - 4-SPD. AUTOMATIC,42RE DGT = TRANSMISSION - 4-SPD. AUTOMATIC,46RE DGO = AUTO. TRANS.

AR = use ase required - = Non illustrrated part

Handles, Lock Bar And Attaching Parts
Figure IAN-820

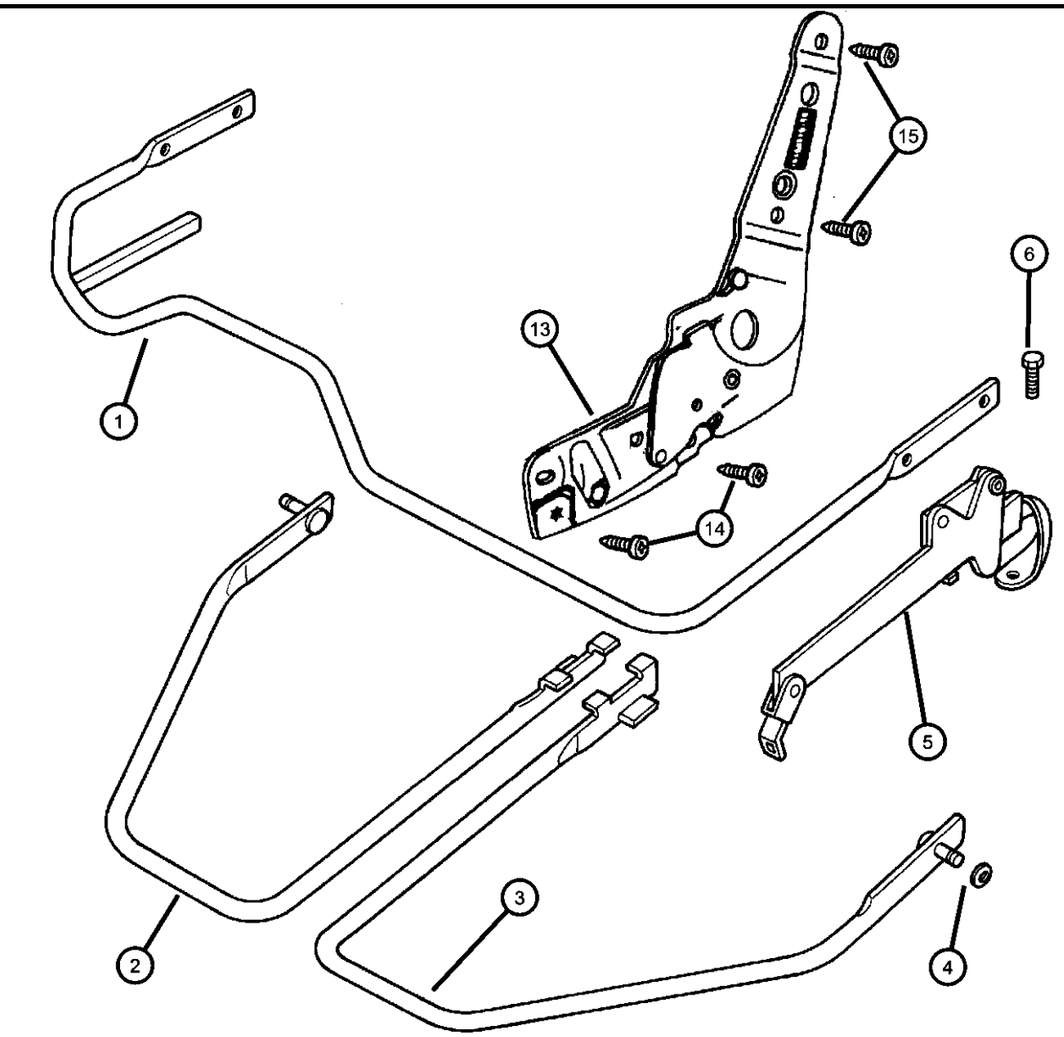

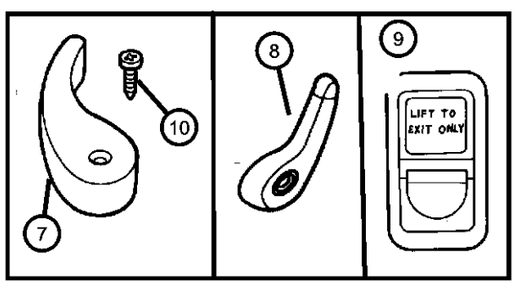

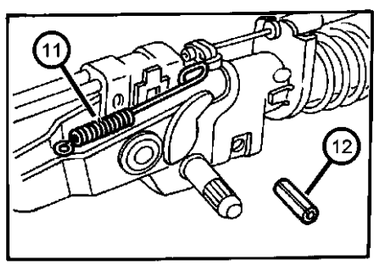

ITEM	PART NUMBER	QTY	LINE	SERIES	BODY	ENGINE	TRANS	TRIM	DESCRIPTION
14									BOLT, Hex Head, .312-18x.875
	04886377AA	1			61			*A2	
		1			61			*G1	
15									BOLT, Adjuster to Seat Frame
	04746334	1			61			*A2	
		1			61			*G1	

DAKOTA (AN)

SERIES	LINE	BODY	ENGINE	TRANSMISSION
L = Quad Cab	1 = Dakota 2WD	31 = CLUB CAB 2-DR 6.5 FT BOX	EPO = 2.5L 4 Cyl.	DDC = TRANSMISSION - 5-SPEED HD MANUAL
L = Regular Cab	5 = Dakota 4WD	61 = REG CAB 6.5 FT BOX	EHO = 3.9L 6 Cyl.	DG4 = TRANSMISSION-MULTI-SPEED AUTO, 45RFE
L = Club Cab		84 = CREW CAB 4-DR W.B.1	EMO = 5.9L 8 Cyl.	DGK = TRANSMISSION - 4-SPD. AUTOMATIC,42RE
			EVO = 4.7L Magnum	DGT = TRANSMISSION - 4-SPD. AUTOMATIC,46RE
			EHC = 3.9L SMPI V6	DGO = AUTO. TRANS.
			EML = 5.9L V8 MPI Engine	
			EPE = 2.5L POWER TECH I-4 Cyl.	
			EVA = 4.7L V8 MPI	

Group - SAN

Body Sheet Metal Except Doors

SAN-1100 Roof Panels 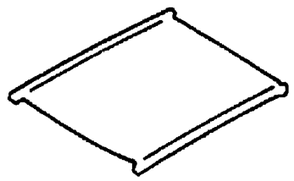	**SAN-1300** Tailgate 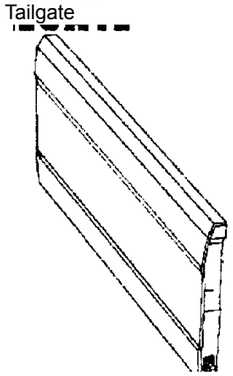	**SAN-200** Floor Pans 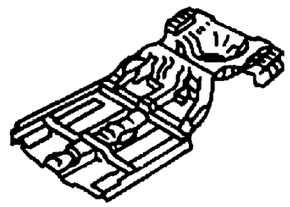	**SAN-300** Plugs
SAN-400 Front Fenders 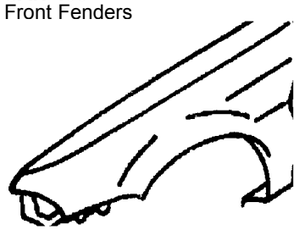	**SAN-500** Hood & Hood Release 	**SAN-600** Cowl and Dash Panel 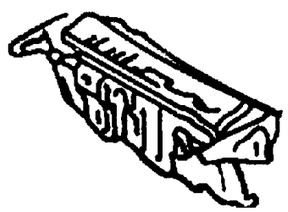	**SAN-700** Glass and Rear View Mirror 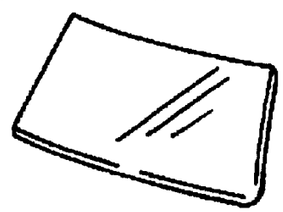
SAN-800 Aperture Panel 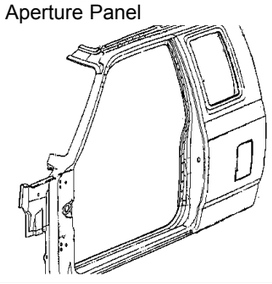	**SAN-900** Quarter Panel and Pillar 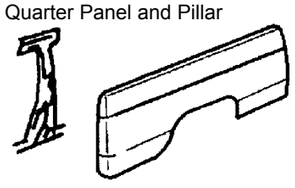		

Group - SAN Body Sheet Metal Except Doors

Illustration Title — Group-Fig. No.

Floor Pans
Floor Pan, Club Cab ..... Fig. SAN - 210
Floor Pan Standard Cab ..... Fig. SAN - 220
Floor Pan, 4 Door ..... Fig. SAN - 225
Floor Box And Panel ..... Fig. SAN - 230

Plugs
Plugs Floor Pan ..... Fig. SAN - 310
Plugs Miscellaneous ..... Fig. SAN - 320

Front Fenders
Fender Front ..... Fig. SAN - 410

Hood & Hood Release
Hood and Release ..... Fig. SAN - 510

Cowl and Dash Panel
Cowl Screen And Shield ..... Fig. SAN - 610

Glass and Rear View Mirror
Windshield And Mirror, Rear Window ..... Fig. SAN - 710

Aperture Panel
Aperture Panel Bodyside Standard Cab ..... Fig. SAN - 810
Aperture Panel Bodyside Club Cab ..... Fig. SAN - 820
Aperture Panel Bodyside, 4 Door ..... Fig. SAN - 830

Quarter Panel and Pillar
Sweptline Box, Panel Outer Box And Fuel Filler Door ..... Fig. SAN - 910

Roof Panels
Roof Panels ..... Fig. SAN - 1110

Tailgate
Tailgate ..... Fig. SAN - 1310

Floor Pan, Club Cab
Figure SAN-210

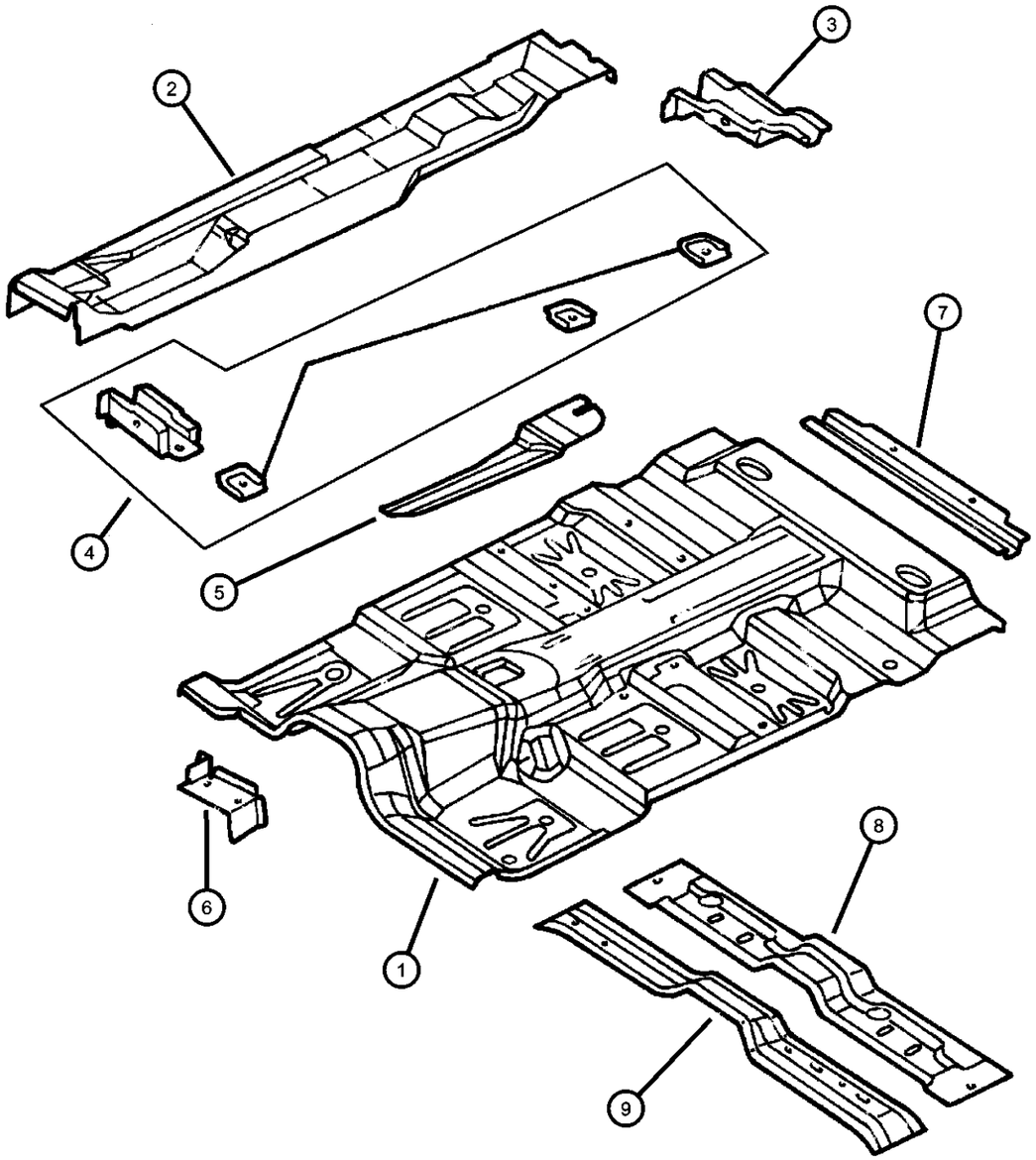

ITEM	PART NUMBER	QTY	LINE	SERIES	BODY	ENGINE	TRANS	TRIM	DESCRIPTION
1									PAN, Center Floor
	55257301AA	1	5		31				
	55257394AA	1	1		31				
2									PAN, Floor
	55255556AC	1			31				Right
	55255557AC	1			31				Left
3									PANEL, Underbody Front
	55255742AB	1			31				Right
	55255743AB	1			31				Left
4									PANEL, Underbody Front
	55255740AD	1			31, 61				Right
	55255741AC	1			31, 61				Left
5	55257300AB	1							SHIELD, Heat
6	55256988AB	1			31, 61				BRACKET, Electronic Control Unit
7	55255878	1			31				CROSSMEMBER, Rear Floor, Seat Belt Attach
8	55255880AB	1			31, 61				CROSSMEMBER, Front Floor
9	55255702AC	1			31, 61				CROSSMEMBER, Front Floor

DAKOTA (AN)

SERIES	LINE	BODY	ENGINE	TRANSMISSION
L = Quad Cab L = Regular Cab L = Club Cab	1 = Dakota 2WD 5 = Dakota 4WD	31 = CLUB CAB 2-DR 6.5 FT BOX 61 = REG CAB 6.5 FT BOX 84 = CREW CAB 4-DR W.B.1	EPO = 2.5L 4 Cyl. EHO = 3.9L 6 Cyl. EMO = 5.9L 8 Cyl. EVO = 4.7L Magnum EHC = 3.9L SMPI V6 EML = 5.9L V8 MPI Engine EPE = 2.5L POWER TECH I-4 Cyl. EVA = 4.7L V8 MPI	DDC = TRANSMISSION - 5-SPEED HD MANUAL DG4 = TRANSMISSION-MULTI-SPEED AUTO, 45RFE DGK = TRANSMISSION - 4-SPD. AUTOMATIC,42RE DGT = TRANSMISSION - 4-SPD. AUTOMATIC,46RE DGO = AUTO. TRANS.

AR = use ase required - = Non illustrrated part

Floor Pan Standard Cab
Figure SAN-220

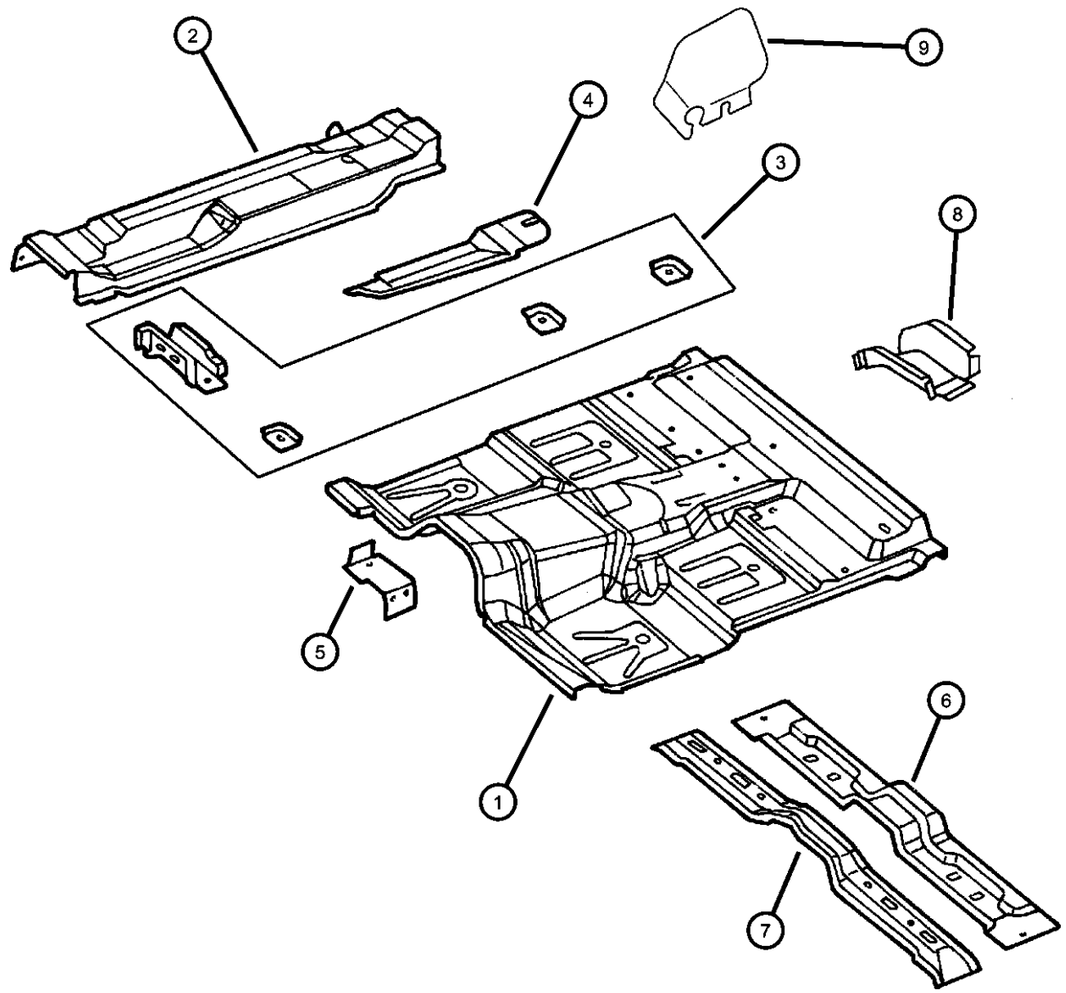

ITEM	PART NUMBER	QTY	LINE	SERIES	BODY	ENGINE	TRANS	TRIM	DESCRIPTION
1									PAN, Center Floor
	55257302AA	1	5		61				
	55257395AA	1	1		61				
2									PAN, Floor
	55255554AB	1			61				Right
	55255555AB	1			61				Left
3									PANEL, Underbody Front
	55255740AD	1			31, 61				Right
	55255741AC	1			31, 61				Left
4	55257300AB	1							SHIELD, Heat
5	55256988AB	1			31, 61				BRACKET, Electronic Control Unit
6	55255880AB	1			31, 61				CROSSMEMBER, Front Floor
7	55255702AC	1			31, 61				CROSSMEMBER, Front Floor
8	55255998AB	1			61				PANEL, Underbody FrontRight
9									BRACKET, Floor Pan Outer
	55256578	1			61				Right
	55256579	1			61				Left

DAKOTA (AN)

SERIES	LINE	BODY	ENGINE	TRANSMISSION
L = Quad Cab	1 = Dakota 2WD	31 = CLUB CAB 2-DR 6.5 FT BOX	EPO = 2.5L 4 Cyl.	DDC = TRANSMISSION - 5-SPEED HD MANUAL
L = Regular Cab	5 = Dakota 4WD	61 = REG CAB 6.5 FT BOX	EHO = 3.9L 6 Cyl.	DG4 = TRANSMISSION-MULTI-SPEED AUTO, 45RFE
L = Club Cab		84 = CREW CAB 4-DR W.B.1	EMO = 5.9L 8 Cyl.	DGK = TRANSMISSION - 4-SPD. AUTOMATIC,42RE
			EVO = 4.7L Magnum	DGT = TRANSMISSION - 4-SPD. AUTOMATIC,46RE
			EHC = 3.9L SMPI V6	DGO = AUTO. TRANS.
			EML = 5.9L V8 MPI Engine	
			EPE = 2.5L POWER TECH I-4 Cyl.	
			EVA = 4.7L V8 MPI	

Floor Pan, 4 Door
Figure SAN-225

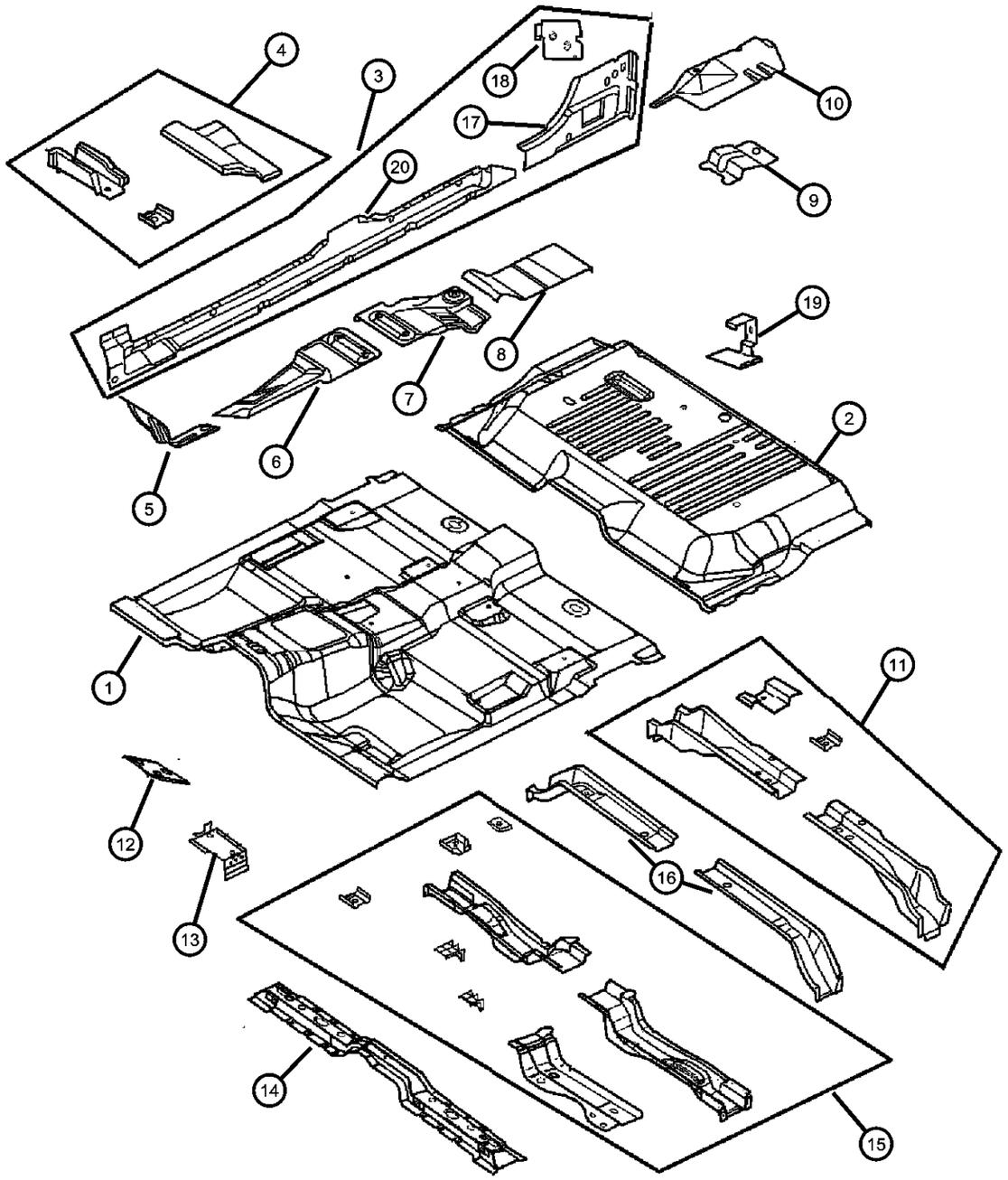

ITEM	PART NUMBER	QTY	LINE	SERIES	BODY	ENGINE	TRANS	TRIM	DESCRIPTION
1	55256236AC	1			84				PAN, Front Floor
2	55257121AA	1			84				PAN, Rear Floor
3									PANEL, Sill
	55257178AA	1			84				Right
	55257179AA	1			84				Left
4									PANEL, Underbody Front
	55256778AB	1			84				Right
	55256779AB	1			84				Left
5									SHIELD, Heat
	55255819AB	1			31, 61, 84				Left
	55257336AA	1			31, 61, 84				Right
6	55257300AA	1			31, 61, 84				SHIELD, Heat
7	55256724	1			84				SHIELD, Heat
8	55257259AA	1			84				SHIELD, HeatMiddle
9	55257291AA	1			84				BRACKET, Seat Support, Middle
10									BRACKET, Seat Support
	55257340AA	1			84				Right
	55257341AA	1			84				Left
11									PANEL, Underbody Front
	55257122AA	1			84				Right
	55257123AA	1			84				Left
12	55255819AC	1							SHIELD, Heat, Dash Front Left
13	55256988AB	1			84				BRACKET, Electronic Control Unit
14	55257346AA	1			84				CROSSMEMBER, Front Floor
15									PANEL, Underbody Front
	55257118AA	1			84				Right
	55257119AA	1			84				Left
16									PANEL, Underbody Front
	55257312AA	1			84				Right
	55257313AA	1			84				Left
17									EXTENSION, Side Sill
	55257132AA	1			84				Right

DAKOTA (AN)

SERIES	LINE	BODY	ENGINE	TRANSMISSION
L = Quad Cab L = Regular Cab L = Club Cab	1 = Dakota 2WD 5 = Dakota 4WD	31 = CLUB CAB 2-DR 6.5 FT BOX 61 = REG CAB 6.5 FT BOX 84 = CREW CAB 4-DR W.B.1	EPO = 2.5L 4 Cyl. EHO = 3.9L 6 Cyl. EMO = 5.9L 8 Cyl. EVO = 4.7L Magnum EHC = 3.9L SMPI V6 EML = 5.9L V8 MPI Engine EPE = 2.5L POWER TECH I-4 Cyl. EVA = 4.7L V8 MPI	DDC = TRANSMISSION - 5-SPEED HD MANUAL DG4 = TRANSMISSION-MULTI-SPEED AUTO, 45RFE DGK = TRANSMISSION - 4-SPD. AUTOMATIC,42RE DGT = TRANSMISSION - 4-SPD. AUTOMATIC,46RE DGO = AUTO. TRANS.

AR = use ase required - = Non illustrrated part

<< RETURN TO GROUP INDEX

Floor Pan, 4 Door
Figure SAN-225

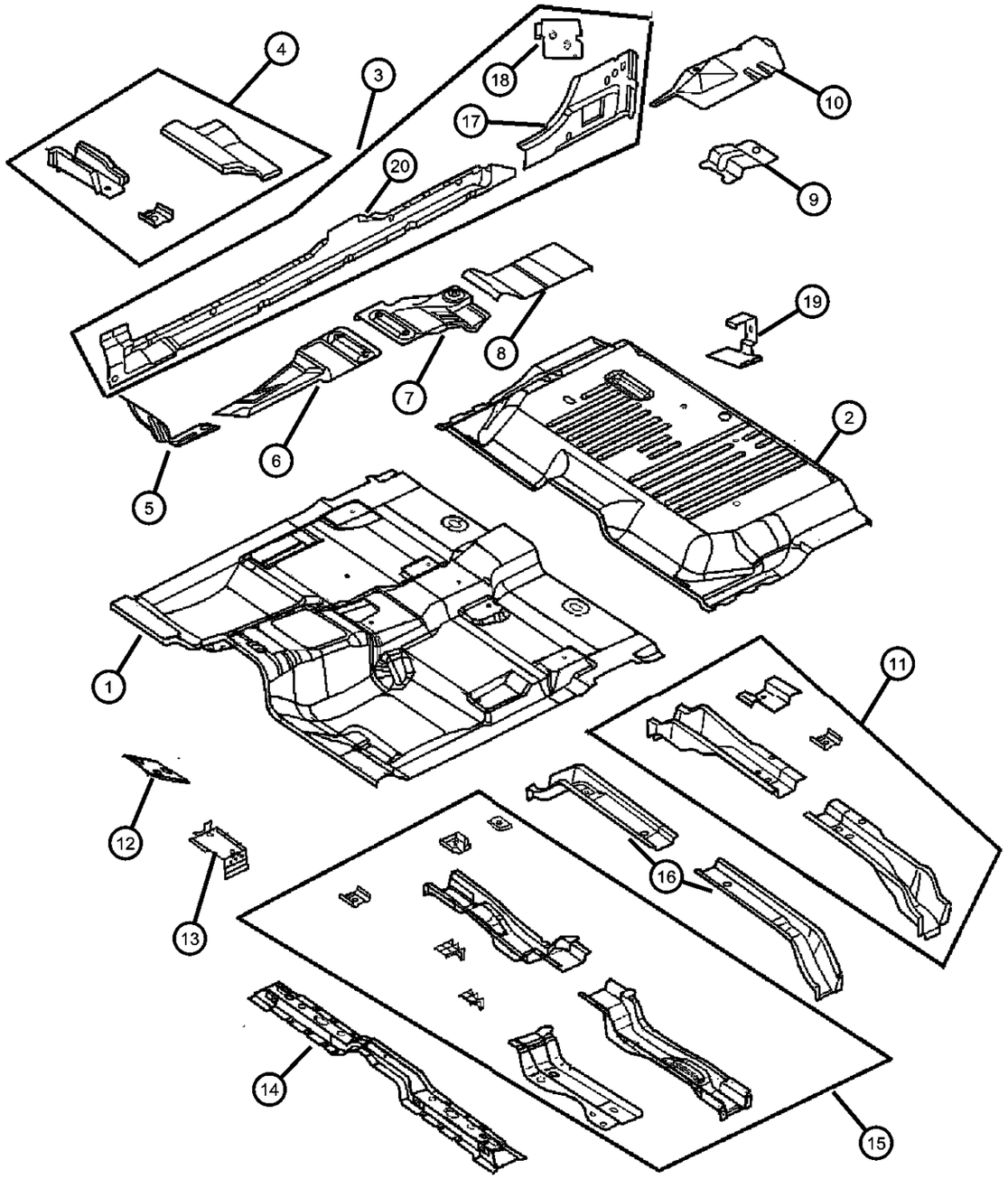

ITEM	PART NUMBER	QTY	LINE	SERIES	BODY	ENGINE	TRANS	TRIM	DESCRIPTION
	55257133AA	1			84				Left
18									REINFORCEMENT, Seat Belt
	55255544	1			84				Right
	55255545	1			84				Left
19	55257124AA	1			84				BRACKET, Jack Mounting
20									PANEL, Sill
	55362004AA	1			84				Right
	55362005AA	1			84				Left

DAKOTA (AN)

SERIES	LINE	BODY	ENGINE	TRANSMISSION
L = Quad Cab L = Regular Cab L = Club Cab	1 = Dakota 2WD 5 = Dakota 4WD	31 = CLUB CAB 2-DR 6.5 FT BOX 61 = REG CAB 6.5 FT BOX 84 = CREW CAB 4-DR W.B.1	EPO = 2.5L 4 Cyl. EHO = 3.9L 6 Cyl. EMO = 5.9L 8 Cyl. EVO = 4.7L Magnum EHC = 3.9L SMPI V6 EML = 5.9L V8 MPI Engine EPE = 2.5L POWER TECH I-4 Cyl. EVA = 4.7L V8 MPI	DDC = TRANSMISSION - 5-SPEED HD MANUAL DG4 = TRANSMISSION-MULTI-SPEED AUTO, 45RFE DGK = TRANSMISSION - 4-SPD. AUTOMATIC,42RE DGT = TRANSMISSION - 4-SPD. AUTOMATIC,46RE DGO = AUTO. TRANS.

Floor Box And Panel
Figure SAN-230

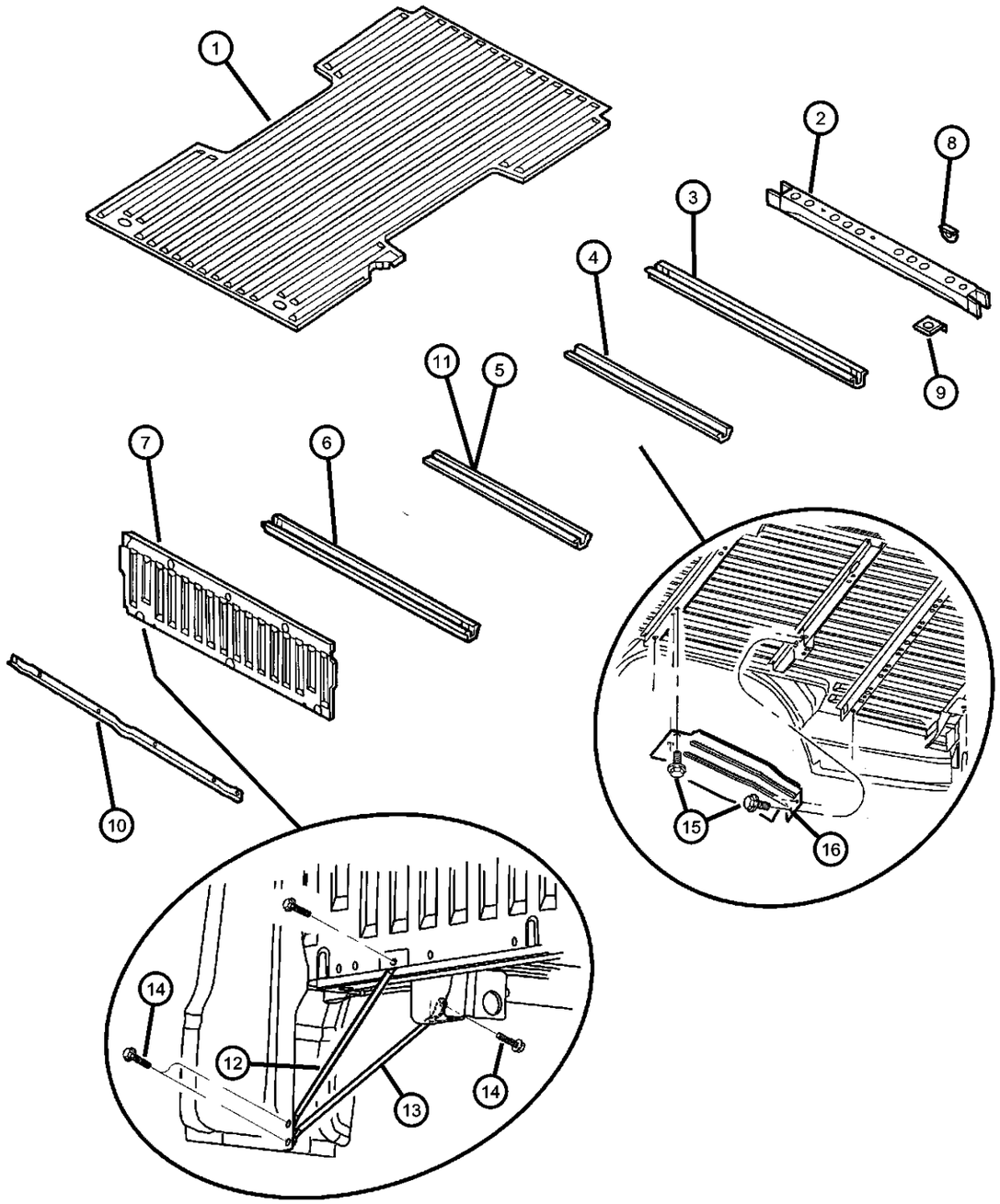

ITEM	PART NUMBER	QTY	LINE	SERIES	BODY	ENGINE	TRANS	TRIM	DESCRIPTION
1									PANEL, Box Floor
	55257144AA	1			84				
	55257379AA	1			31, 61				
2									SILL, Rear Cross
	55257386AA	1			31, 61				
		1			84				
3									SILL, Box
	55256563AC	1			84				
	55256563AD	1			31, 61				
4									CROSSMEMBER, Front Floor
	55256567	1			31, 61				Crossmember #3
		1			84				Without Brackets
	55362011AA	1			84				With Brackets
5	55256562AC	1			31, 61				SILL, Box, Crossmember #2
6									CROSSMEMBER, Front Floor
	55256559AE	1			31, 61				
	55257474AA	1			84				
7									PANEL, Front Box
	55256966AB	1			31, 61, 84				Center
	55362027AA	1			84				
		1			31, 61				
8									BRACKET, Winch
	55256808	1			31, 61				
		1			84				
9									TAPPING PLATE, Sill to Frame
	55345442	2			31, 61				
		2			84				
10	55256943AD	1							SEAL, Body Side
11	55257484AA	1			84				CROSSMEMBER, Front Floor
12	55362025AA	2			84				BRACE
13									BRACE, Floor Pan
	55257486AA	1			84				Front Mounting Outer Box to Floor, Right

DAKOTA (AN)

SERIES	LINE	BODY	ENGINE	TRANSMISSION
L = Quad Cab L = Regular Cab L = Club Cab	1 = Dakota 2WD 5 = Dakota 4WD	31 = CLUB CAB 2-DR 6.5 FT BOX 61 = REG CAB 6.5 FT BOX 84 = CREW CAB 4-DR W.B.1	EPO = 2.5L 4 Cyl. EHO = 3.9L 6 Cyl. EMO = 5.9L 8 Cyl. EVO = 4.7L Magnum EHC = 3.9L SMPI V6 EML = 5.9L V8 MPI Engine EPE = 2.5L POWER TECH I-4 Cyl. EVA = 4.7L V8 MPI	DDC = TRANSMISSION - 5-SPEED HD MANUAL DG4 = TRANSMISSION-MULTI-SPEED AUTO, 45RFE DGK = TRANSMISSION - 4-SPD. AUTOMATIC,42RE DGT = TRANSMISSION - 4-SPD. AUTOMATIC,46RE DGO = AUTO. TRANS.

AR = use ase required - = Non illustrrated part

Floor Box And Panel
Figure SAN-230

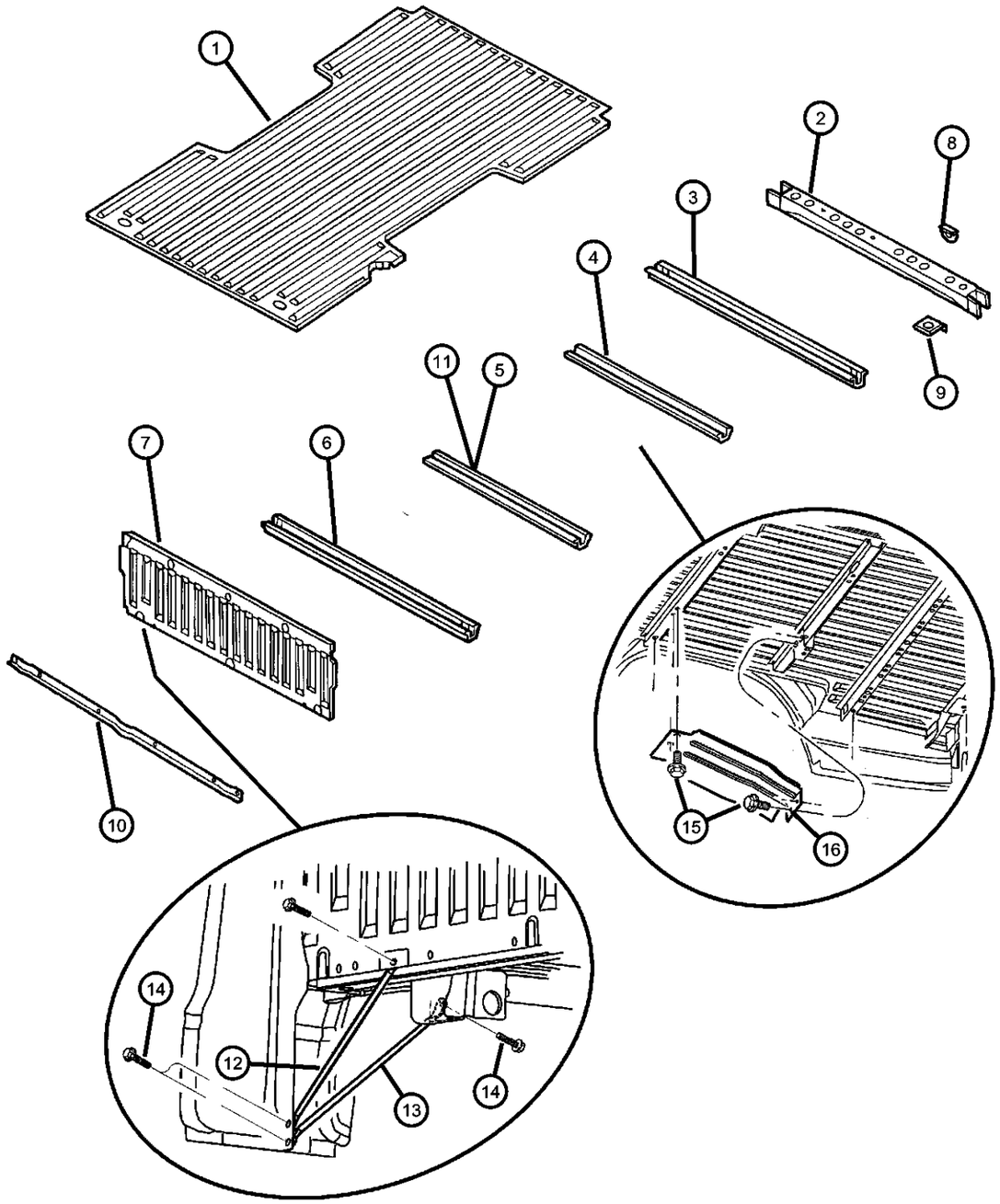

ITEM	PART NUMBER	QTY	LINE	SERIES	BODY	ENGINE	TRANS	TRIM	DESCRIPTION
	55362024AA	1			84				Front Mounting Outer Box to Floor, Left
14	06101455	8			84				SCREW AND WASHER, Hex Head, M6x1x20
15	06036237AA	4			84				SCREW
16	55362021AA	1			84				SHIELD, Heat

DAKOTA (AN)

SERIES	LINE	BODY	ENGINE	TRANSMISSION
L = Quad Cab L = Regular Cab L = Club Cab	1 = Dakota 2WD 5 = Dakota 4WD	31 = CLUB CAB 2-DR 6.5 FT BOX 61 = REG CAB 6.5 FT BOX 84 = CREW CAB 4-DR W.B.1	EPO = 2.5L 4 Cyl. EHO = 3.9L 6 Cyl. EMO = 5.9L 8 Cyl. EVO = 4.7L Magnum EHC = 3.9L SMPI V6 EML = 5.9L V8 MPI Engine EPE = 2.5L POWER TECH I-4 Cyl. EVA = 4.7L V8 MPI	DDC = TRANSMISSION - 5-SPEED HD MANUAL DG4 = TRANSMISSION-MULTI-SPEED AUTO, 45RFE DGK = TRANSMISSION - 4-SPD. AUTOMATIC,42RE DGT = TRANSMISSION - 4-SPD. AUTOMATIC,46RE DGO = AUTO. TRANS.

AR = use ase required - = Non illustrrated part

Plugs Floor Pan
Figure SAN-310

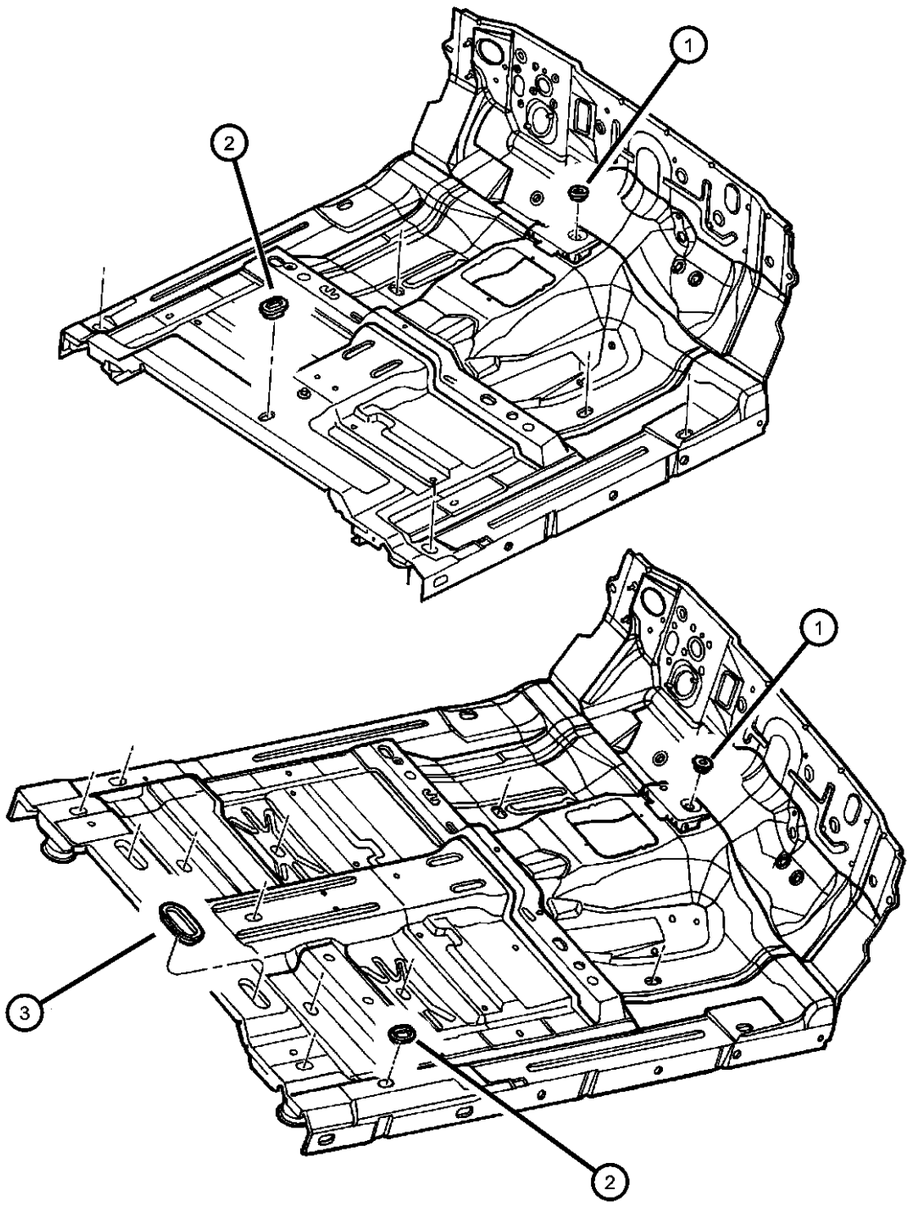

ITEM	PART NUMBER	QTY	LINE	SERIES	BODY	ENGINE	TRANS	TRIM	DESCRIPTION
1	55257380AA	1			31, 61, 84				PLUG
2	04586055	AR			31, 61, 84				PLUG, Floor Pan
3	04586054	2			31, 84				PLUG, Floor Pan

DAKOTA (AN)

SERIES	LINE	BODY	ENGINE	TRANSMISSION
L = Quad Cab L = Regular Cab L = Club Cab	1 = Dakota 2WD 5 = Dakota 4WD	31 = CLUB CAB 2-DR 6.5 FT BOX 61 = REG CAB 6.5 FT BOX 84 = CREW CAB 4-DR W.B.1	EPO = 2.5L 4 Cyl. EHO = 3.9L 6 Cyl. EMO = 5.9L 8 Cyl. EVO = 4.7L Magnum EHC = 3.9L SMPI V6 EML = 5.9L V8 MPI Engine EPE = 2.5L POWER TECH I-4 Cyl. EVA = 4.7L V8 MPI	DDC = TRANSMISSION - 5-SPEED HD MANUAL DG4 = TRANSMISSION-MULTI-SPEED AUTO, 45RFE DGK = TRANSMISSION - 4-SPD. AUTOMATIC,42RE DGT = TRANSMISSION - 4-SPD. AUTOMATIC,46RE DGO = AUTO. TRANS.

Plugs Miscellaneous
Figure SAN-320

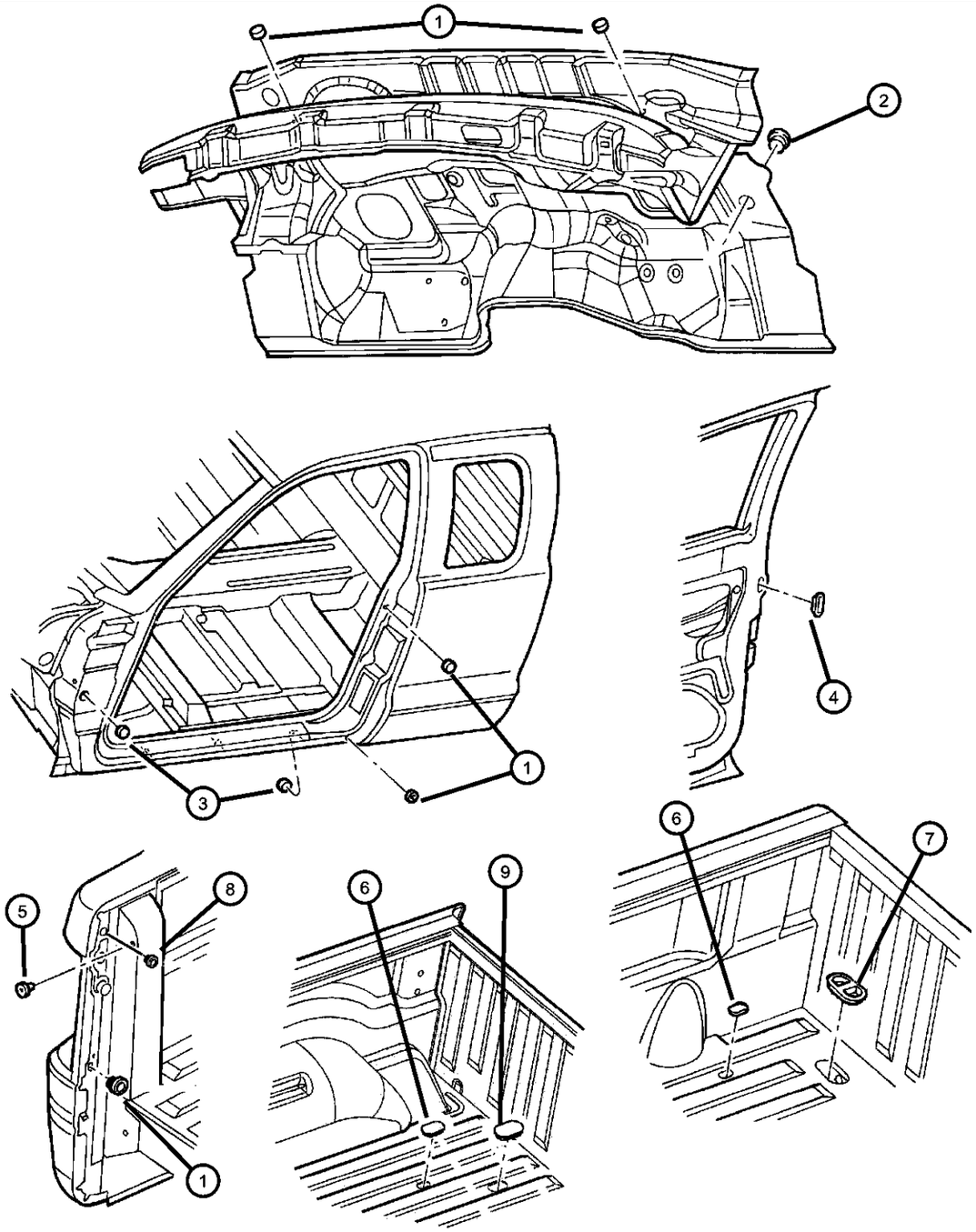

ITEM	PART NUMBER	QTY	LINE	SERIES	BODY	ENGINE	TRANS	TRIM	DESCRIPTION
1	01774076	4							PLUG
2	04646855	1			31, 61, 84				PLUG, Floor Pan, Rubber
3									PLUG
	55257380AA	8			61, 84				25mm
		10			31				25mm
4	05257081	2							PLUG, Door, Inner Panel
5	03639325	2							BUMPER, Rubber
6	04440486	2							PLUG, Body, 19.05mm x 31.75mm, Slot
7	55346332	2			31, 61				PLUG, Sealing, Box Floor
8	02860332	2							PLUG, Anti-Rattle
9	55257378AA	2			84				PLUG
-10	04084000	2			31, 61, 84				PLUG, Hood, Rear E-Coat Drain

DAKOTA (AN)

SERIES	LINE	BODY	ENGINE	TRANSMISSION
L = Quad Cab L = Regular Cab L = Club Cab	1 = Dakota 2WD 5 = Dakota 4WD	31 = CLUB CAB 2-DR 6.5 FT BOX 61 = REG CAB 6.5 FT BOX 84 = CREW CAB 4-DR W.B.1	EPO = 2.5L 4 Cyl. EHO = 3.9L 6 Cyl. EMO = 5.9L 8 Cyl. EVO = 4.7L Magnum EHC = 3.9L SMPI V6 EML = 5.9L V8 MPI Engine EPE = 2.5L POWER TECH I-4 Cyl. EVA = 4.7L V8 MPI	DDC = TRANSMISSION - 5-SPEED HD MANUAL DG4 = TRANSMISSION-MULTI-SPEED AUTO, 45RFE DGK = TRANSMISSION - 4-SPD. AUTOMATIC,42RE DGT = TRANSMISSION - 4-SPD. AUTOMATIC,46RE DGO = AUTO. TRANS.

Fender Front
Figure SAN-410

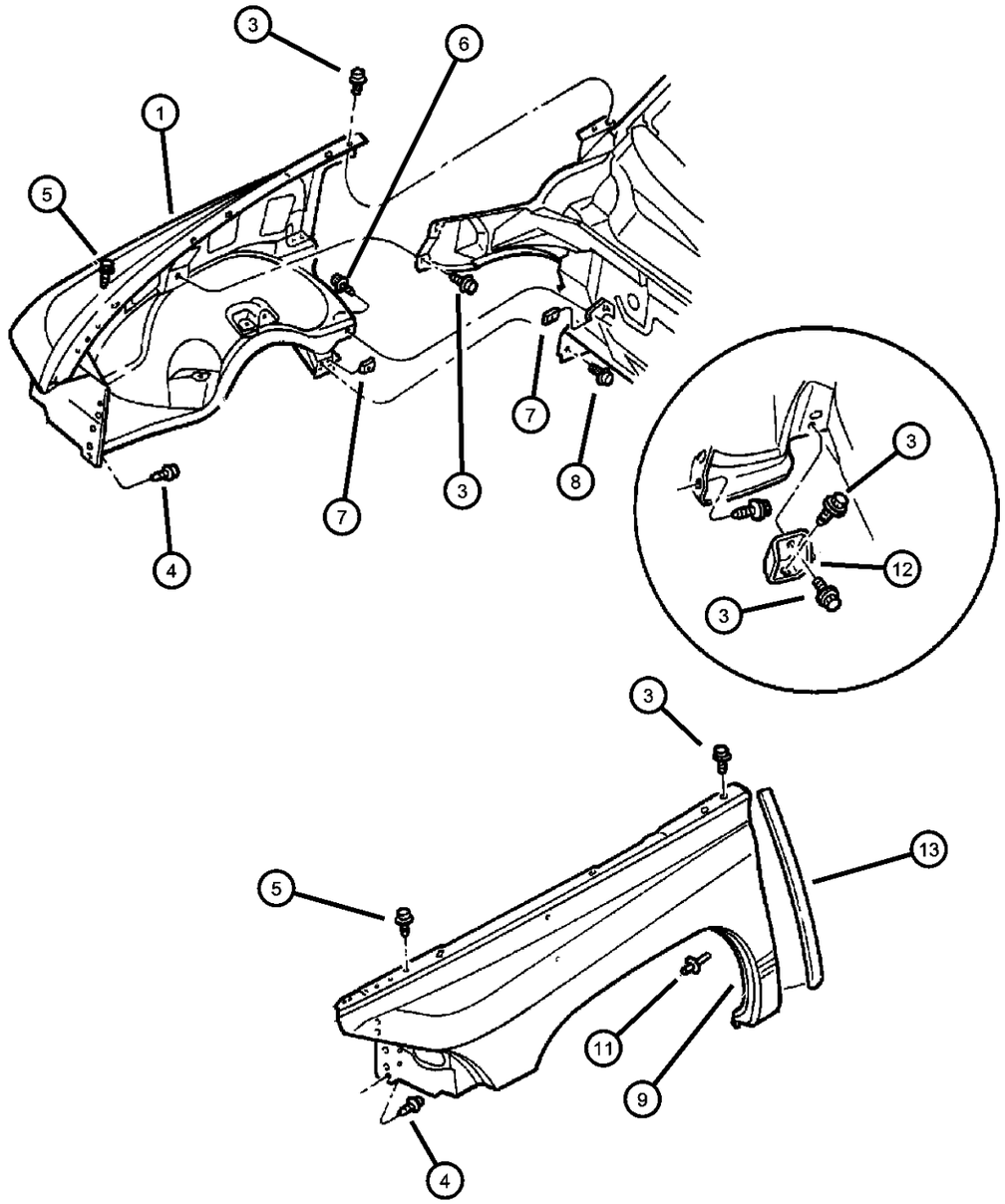

ITEM	PART NUMBER	QTY	LINE	SERIES	BODY	ENGINE	TRANS	TRIM	DESCRIPTION
1									FENDER
	55255030AC	1							Right
	55255031AC	1							Left
-2	06505526AA	1							STUD, Grounding
3	06503757	4							SCREW AND WASHER, Hex Head, M8-1.25x22.00
4	06502282	10							SCREW, Hex Head, M8x1.25x30, Fender Inner Front to Radiator Closure
5	06101777	6							SCREW, Hex Flange Head Tapping, M6x1.00x20.00, Front Fender Upper to Radiator Closure
6	06505442AA	2							SCREW AND WASHER, Hex Head, M8-1.25x22.00
7	06101283	2							U-NUT, M8x1.25
8	06503661	2							SCREW AND WASHER, Hex Head, M8x1.25x25
9									LINER, Front Fender
	55256848AB	1							Includes Liner And Shield, Right
	55257061AB	1							Includes Liner And Panel Fender Side Shield, Left
-10	55257063AA	1							PANEL, Fender Side Shield
11	34201631	12							RIVET, M6.25x28 Black, Plastic
12									BRACKET, Fender Mounting
	55255930	1							Right
	55255931	1							Left
13									SEAL, Fender To Cowl
	55256050	1							Right
	55256051	1							Left

DAKOTA (AN)

SERIES	LINE	BODY	ENGINE	TRANSMISSION
L = Quad Cab L = Regular Cab L = Club Cab	1 = Dakota 2WD 5 = Dakota 4WD	31 = CLUB CAB 2-DR 6.5 FT BOX 61 = REG CAB 6.5 FT BOX 84 = CREW CAB 4-DR W.B.1	EPO = 2.5L 4 Cyl. EHO = 3.9L 6 Cyl. EMO = 5.9L 8 Cyl. EVO = 4.7L Magnum EHC = 3.9L SMPI V6 EML = 5.9L V8 MPI Engine EPE = 2.5L POWER TECH I-4 Cyl. EVA = 4.7L V8 MPI	DDC = TRANSMISSION - 5-SPEED HD MANUAL DG4 = TRANSMISSION-MULTI-SPEED AUTO, 45RFE DGK = TRANSMISSION - 4-SPD. AUTOMATIC,42RE DGT = TRANSMISSION - 4-SPD. AUTOMATIC,46RE DGO = AUTO. TRANS.

AR = use ase required - = Non illustrrated part

Hood and Release
Figure SAN-510

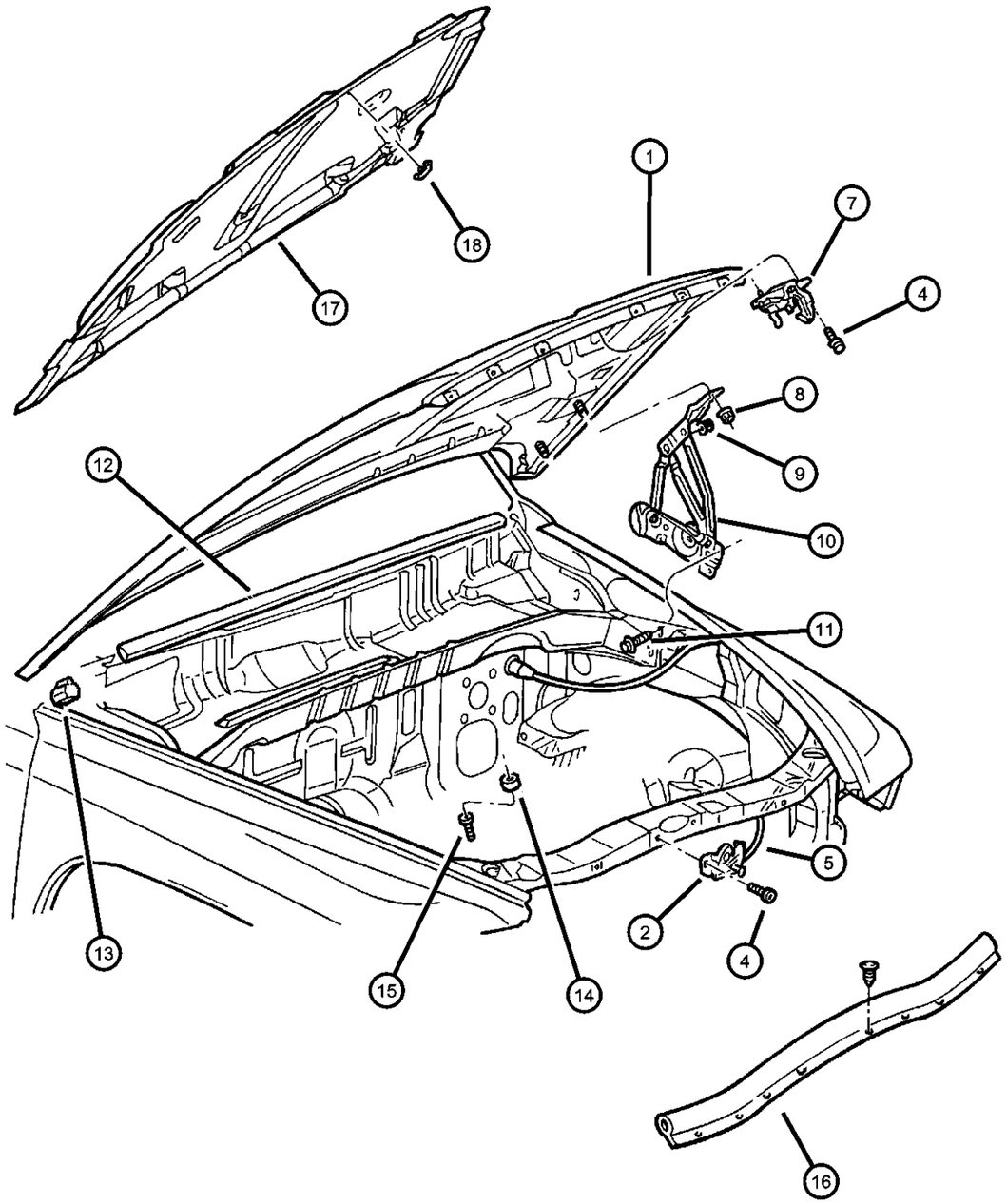

ITEM	PART NUMBER	QTY	LINE	SERIES	BODY	ENGINE	TRANS	TRIM	DESCRIPTION
1	55274716	1							HOOD
2	55255451AB	1			31, 61, 84				LATCH, Hood
-3	04215966	1							LABEL, Equipmemt Identification
4	06101455	3			31, 61, 84				SCREW AND WASHER, Hex Head, M6x1x20
5	55256496AB	1							RELEASE, Hood Latch
-6	06503794	3							CLIP, M6.3x11.2
7	55257390AA	1							STRIKER, Hood Latch
8	06100051	4							NUT AND WASHER, Hex Nut-Coned Washer, M8 x 1.25
9	06100051	4							NUT, Hex Lock, M8x1.25, (NOT SERVICED)
10									HINGE, Hood
	55255448AC	1							Right
	55255449AC	1							Left
11	06503661	6							SCREW AND WASHER, Hex Head, M8x1.25x25
12	55255099	1							SEAL, Hood To Cowl
13	55256768AB	2							BUMPER, Hood to Fender
14	02276804	2			31, 61, 84				BUMPER, Hood, Rubber
15	02276804	2							SCREW, Round Head, .312-18x1.50, (NOT SERVICED)
16	55055842AA	1							SEAL, Hood, Variform to Hood Inner
17	55216161AD	1							PAD, Hood Silencer
18	06003351	13							RETAINER, Hood Insulation, .415x.690

DAKOTA (AN)

SERIES	LINE	BODY	ENGINE	TRANSMISSION
L = Quad Cab L = Regular Cab L = Club Cab	1 = Dakota 2WD 5 = Dakota 4WD	31 = CLUB CAB 2-DR 6.5 FT BOX 61 = REG CAB 6.5 FT BOX 84 = CREW CAB 4-DR W.B.1	EPO = 2.5L 4 Cyl. EHO = 3.9L 6 Cyl. EMO = 5.9L 8 Cyl. EVO = 4.7L Magnum EHC = 3.9L SMPI V6 EML = 5.9L V8 MPI Engine EPE = 2.5L POWER TECH I-4 Cyl. EVA = 4.7L V8 MPI	DDC = TRANSMISSION - 5-SPEED HD MANUAL DG4 = TRANSMISSION-MULTI-SPEED AUTO, 45RFE DGK = TRANSMISSION - 4-SPD. AUTOMATIC,42RE DGT = TRANSMISSION - 4-SPD. AUTOMATIC,46RE DGO = AUTO. TRANS.

Cowl Screen And Shield
Figure SAN-610

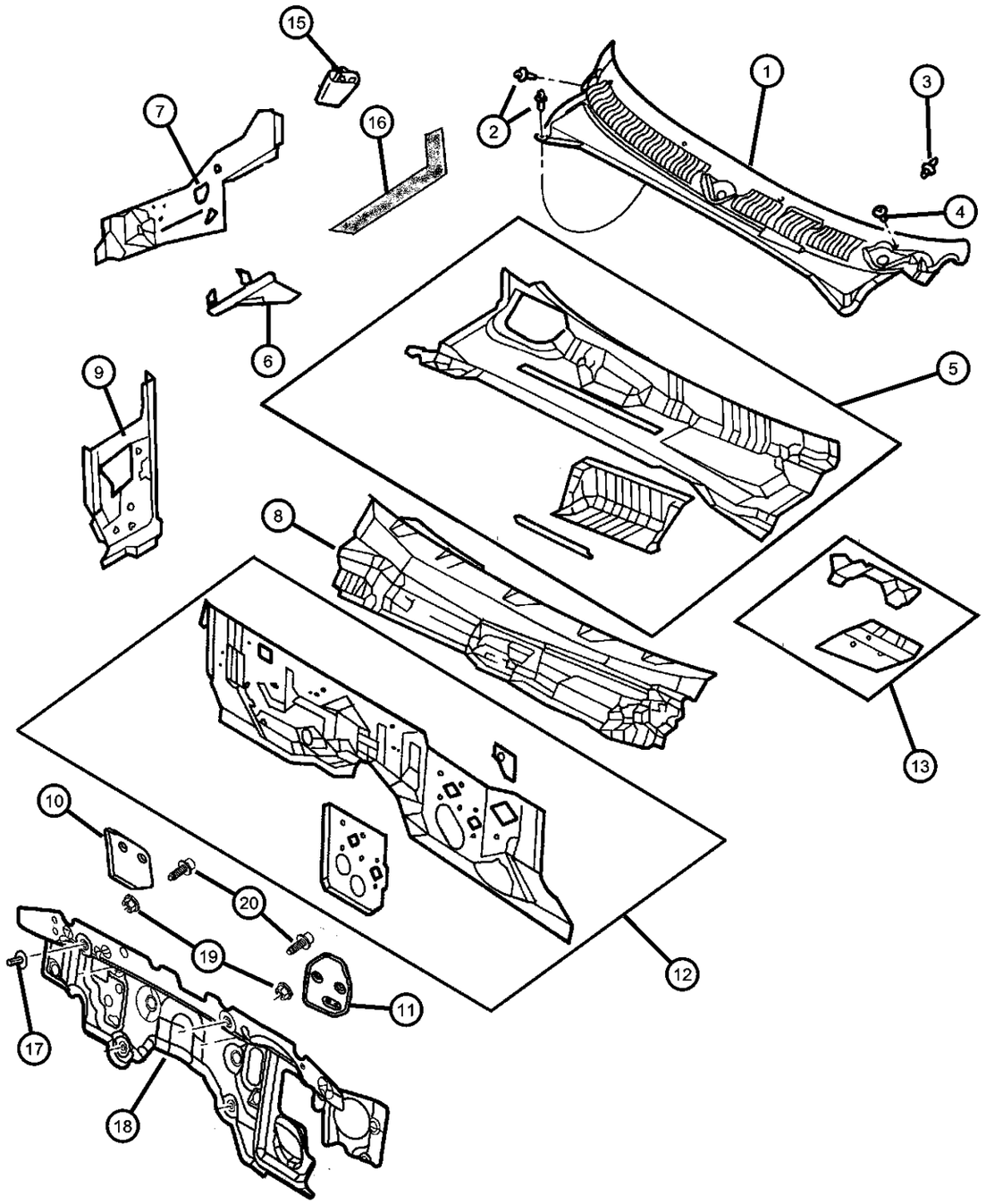

ITEM	PART NUMBER	QTY	LINE	SERIES	BODY	ENGINE	TRANS	TRIM	DESCRIPTION
Sales Code [EVA] = New Generation Magnum 4.7L, V8									
1	55055986AB	1							PANEL, Cowl
2	06030441	2							PIN, Retainer
3	06504947AA	1							STUD, M6x1.00x32
4	06503339	4							NUT, Plastic, Cowl Top Cover
5	55255708AD	1							PANEL, Cowl Plenum Lower
6									REINFORCEMENT, Hood Hinge
	55255550	1							Right
	55255551	1							Left
7									PANEL, Plenum End
	55255512	1							Right
	55255513	1							Left
8	55255515AD	1			31, 61, 84				PANEL, Cowl
9									PANEL, Cowl Side
	55255090AC	1							Right
	55255091AC	1							Left
10	55257336AA	1			31, 61, 84				SHIELD, HeatRight
11	55255819AC	1							SHIELD, HeatLeft
12	55255082AF	1			31, 61, 84				PANEL, Dash
13	55255881	1							SUPPORT, Steering ColumnUpper
-14									BRACKET, Steering Column
	55351183AB	1			31, 61, 62				
	55351184AB	1			84				
15	55035931	2							SEAL, Plenum Drain
16									SEAL, Cowl Plenum Cover, Also Serviced in , PANEL, Cowl
	04886010AA	1							Right
	04886011AA	1							Left
17	55361007AA	1							SILENCER, Dash Panel, With Sales Code [EVA]
18	06506099AA	6							NUT, Push-On Spring, 3
19	06034402	6							NUT, Hex Flange, .25-7
20	06035017	6							SCREW, Hex Flange Head, .25-14x1.00

DAKOTA (AN)

SERIES	LINE	BODY	ENGINE	TRANSMISSION
L = Quad Cab L = Regular Cab L = Club Cab	1 = Dakota 2WD 5 = Dakota 4WD	31 = CLUB CAB 2-DR 6.5 FT BOX 61 = REG CAB 6.5 FT BOX 84 = CREW CAB 4-DR W.B.1	EPO = 2.5L 4 Cyl. EHO = 3.9L 6 Cyl. EMO = 5.9L 8 Cyl. EVO = 4.7L Magnum EHC = 3.9L SMPI V6 EML = 5.9L V8 MPI Engine EPE = 2.5L POWER TECH I-4 Cyl. EVA = 4.7L V8 MPI	DDC = TRANSMISSION - 5-SPEED HD MANUAL DG4 = TRANSMISSION-MULTI-SPEED AUTO, 45RFE DGK = TRANSMISSION - 4-SPD. AUTOMATIC,42RE DGT = TRANSMISSION - 4-SPD. AUTOMATIC,46RE DGO = AUTO. TRANS.

Windshield And Mirror, Rear Window
Figure SAN-710

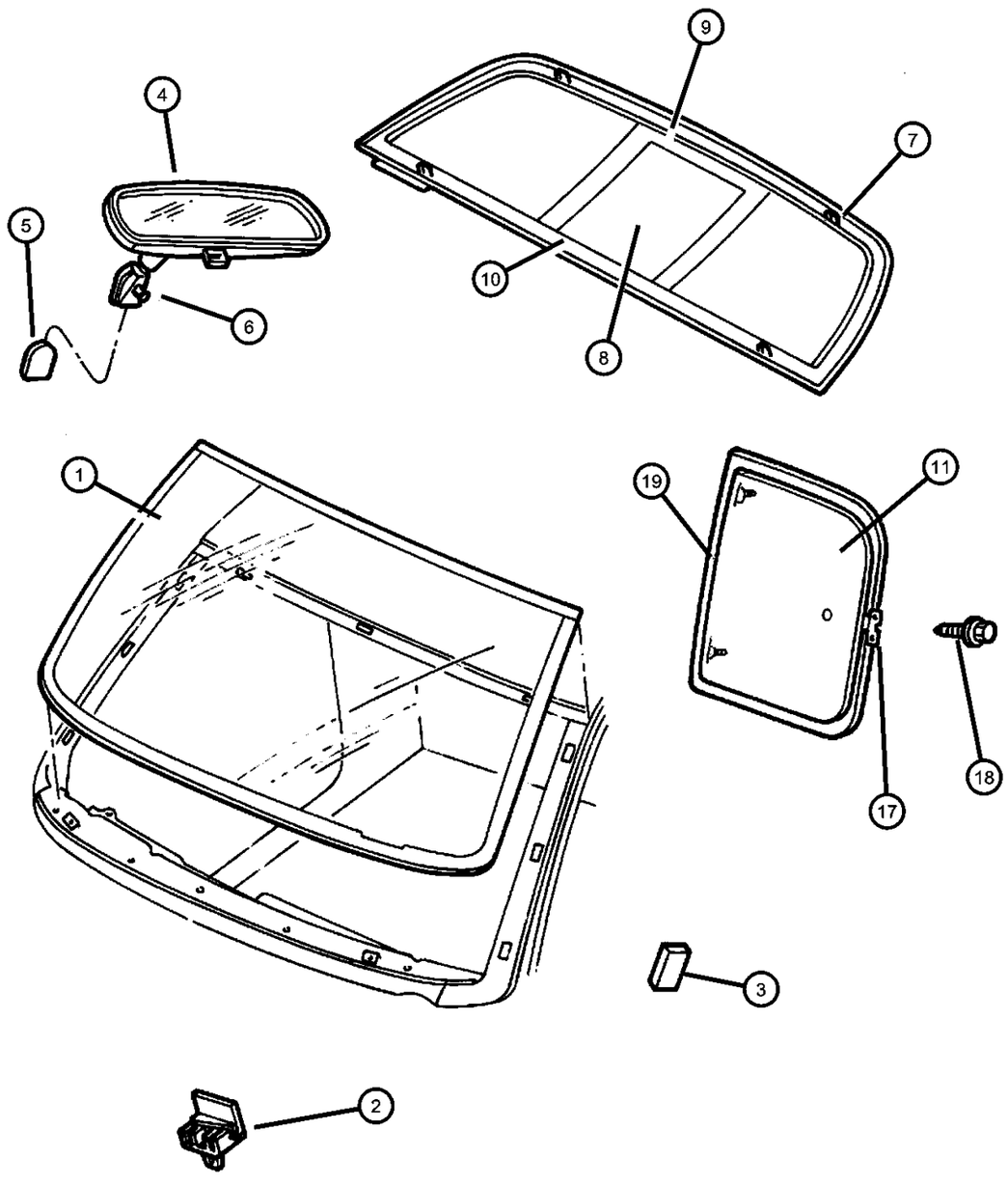

ITEM	PART NUMBER	QTY	LINE	SERIES	BODY	ENGINE	TRANS	TRIM	DESCRIPTION
1	55255662AC	1			31, 61, 84				WINDSHIELD
2	55256967AC	2							SPACER, Windshield
3	55028214	4							SPACER, Windshield
4									MIRROR, Inside Rear View
	04354636	1							Day/Night
	55154902	1							Automatic Day/Night
5	55076401	1							BUTTON, Rear View Mirror
6	06031094	1							SCREW, Pan Head Tapping, .19-16x.375
7									BACKLITE
	55255676AB	1							Sliding Privacy
	55257184AA	1			84				Fixed Privacy Heated
	DB09680YPY								Collision Replacement Glass
	55257403AA	1							Fixed Tint
	DB09591GTY								Collision Replacement Glass
8	04883392AA	1							GLASS, Backlite, Sliding
	DB09592YPY								Collision Replacement Glass
9	04883393AA	1							CHANNEL, Sliding Backlite, Upper Run With Center Stop
10	04883394AA	1							CHANNEL, Sliding Backlite, Lower Run
11									GLASS, Quarter Window, Without The Seal
	55255668AB	1			31				Club Cab Only, For Quad Cab See Doors, Right
	55255669AB	1			31				Club Cab Only, For Quad Cab See Doors, Left
-12	04883391AA	1			31				GASKET, Hinge To Glass
-13	04339313	1			31				RETAINER PACKAGE, Vent and Stationary Glass
-14	04365420	1							RETAINER, Latch
-15	06032365	1			31				SCREW, .25-20
-16	06500284	AR							NUT, Hex, M6x1.00
17	55362014AA	1			31				LATCH, Body Side Glass
18	06503958	4			31				SCREW AND WASHER, Self Tapping, M6x1x22
19	55255886	2			31				SEAL, Quarter Window

DAKOTA (AN)

SERIES	LINE	BODY	ENGINE	TRANSMISSION
L = Quad Cab L = Regular Cab L = Club Cab	1 = Dakota 2WD 5 = Dakota 4WD	31 = CLUB CAB 2-DR 6.5 FT BOX 61 = REG CAB 6.5 FT BOX 84 = CREW CAB 4-DR W.B.1	EPO = 2.5L 4 Cyl. EHO = 3.9L 6 Cyl. EMO = 5.9L 8 Cyl. EVO = 4.7L Magnum EHC = 3.9L SMPI V6 EML = 5.9L V8 MPI Engine EPE = 2.5L POWER TECH I-4 Cyl. EVA = 4.7L V8 MPI	DDC = TRANSMISSION - 5-SPEED HD MANUAL DG4 = TRANSMISSION-MULTI-SPEED AUTO, 45RFE DGK = TRANSMISSION - 4-SPD. AUTOMATIC,42RE DGT = TRANSMISSION - 4-SPD. AUTOMATIC,46RE DGO = AUTO. TRANS.

AR = use ase required - = Non illustrrated part

Aperture Panel Bodyside Standard Cab
Figure SAN-810

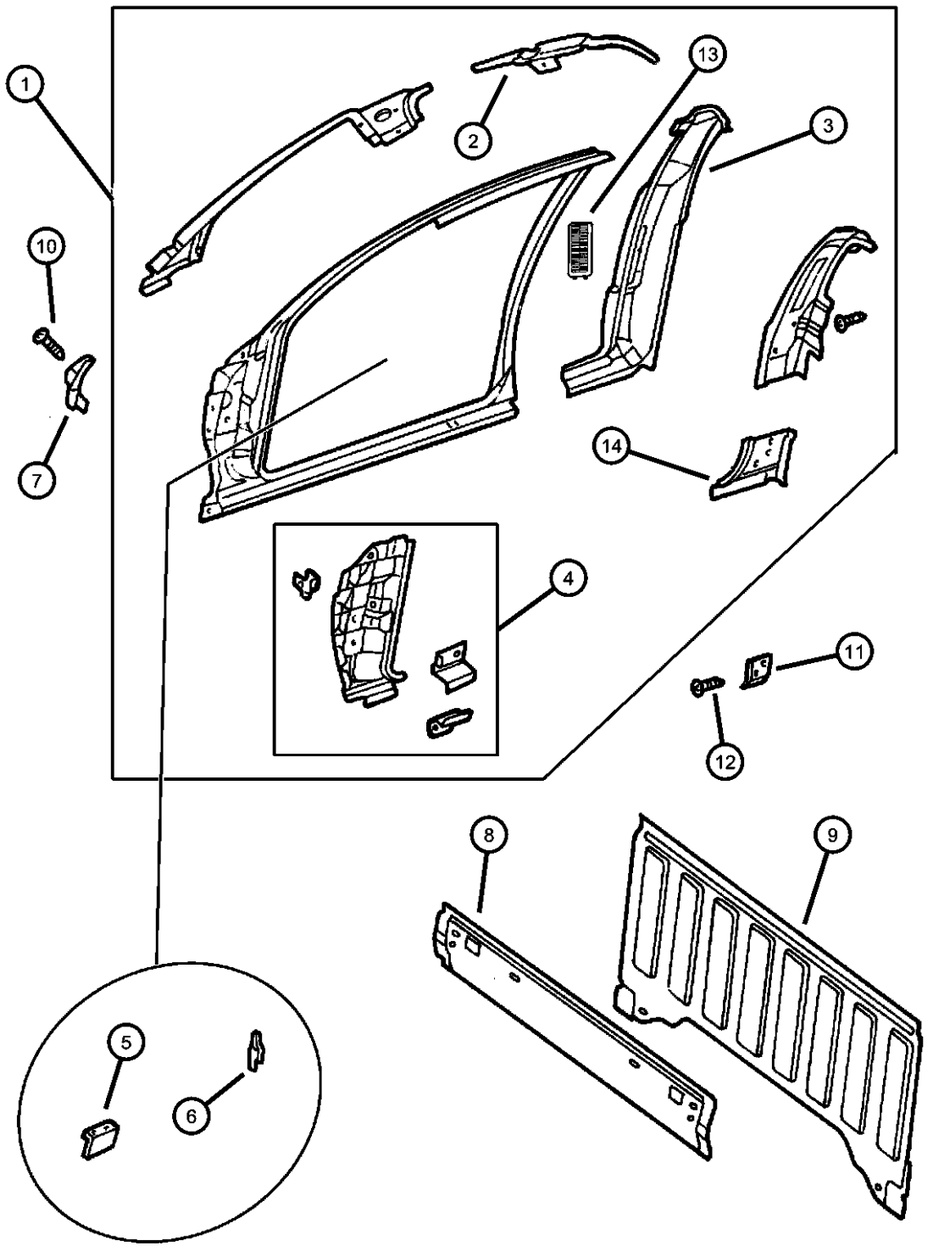

ITEM	PART NUMBER	QTY	LINE	SERIES	BODY	ENGINE	TRANS	TRIM	DESCRIPTION
1									PANEL, Body Side Aperture
	04883906AG	1			31, 61				Right
	04883907AG	1			31, 61				Left
2									RAIL, Roof
	55255538AB	1			61				Right
	55255539AB	1			61				Left
3									PANEL, Quarter
	55255518AC	1			61				Right
	55255519AC	1			61				Left
4									PANEL, Body Side Front
	55256968AB	1			31, 61				Right
	55256969AB	1			31, 61				Left
5									BRACKET, Aperture to Fender
	55255504AB	1			31, 61				Right
	55255505AB	1			31, 61				Left
6	04512871AB	2			31, 61				RETAINER, Door Lock Striker
7									REINFORCEMENT, Cowl Side
	55255806AC	1							Right
	55255807AC	1							Left
8	55257428AA	1			61, 84				REINFORCEMENT, Cab Back
9	55257325AA	1							PANEL, Cab Back
10	00154649	4			31, 61, 84				SCREW, Pan Head Tapping, .19-16x.625
11									REINFORCEMENT, Seat Belt
	55255544	1			61				Right
	55255545	1			61				Left
12	06030441	2			31, 61, 84				PIN, Retainer
13	55055865AD	2			31, 61, 84				EXHAUSTER, Quarter Panel
14									PANEL, Quarter Inner
	55255914AB	1			61				Right
	55255915AB	1			61				Left
-15									BAFFLE, B Pillar
	55255728AB	1			31, 61				Right

DAKOTA (AN)

SERIES	LINE	BODY	ENGINE	TRANSMISSION
L = Quad Cab L = Regular Cab L = Club Cab	1 = Dakota 2WD 5 = Dakota 4WD	31 = CLUB CAB 2-DR 6.5 FT BOX 61 = REG CAB 6.5 FT BOX 84 = CREW CAB 4-DR W.B.1	EPO = 2.5L 4 Cyl. EHO = 3.9L 6 Cyl. EMO = 5.9L 8 Cyl. EVO = 4.7L Magnum EHC = 3.9L SMPI V6 EML = 5.9L V8 MPI Engine EPE = 2.5L POWER TECH I-4 Cyl. EVA = 4.7L V8 MPI	DDC = TRANSMISSION - 5-SPEED HD MANUAL DG4 = TRANSMISSION-MULTI-SPEED AUTO, 45RFE DGK = TRANSMISSION - 4-SPD. AUTOMATIC,42RE DGT = TRANSMISSION - 4-SPD. AUTOMATIC,46RE DGO = AUTO. TRANS.

AR = use ase required - = Non illustrrated part

<< RETURN TO GROUP INDEX

Aperture Panel Bodyside Standard Cab
Figure SAN-810

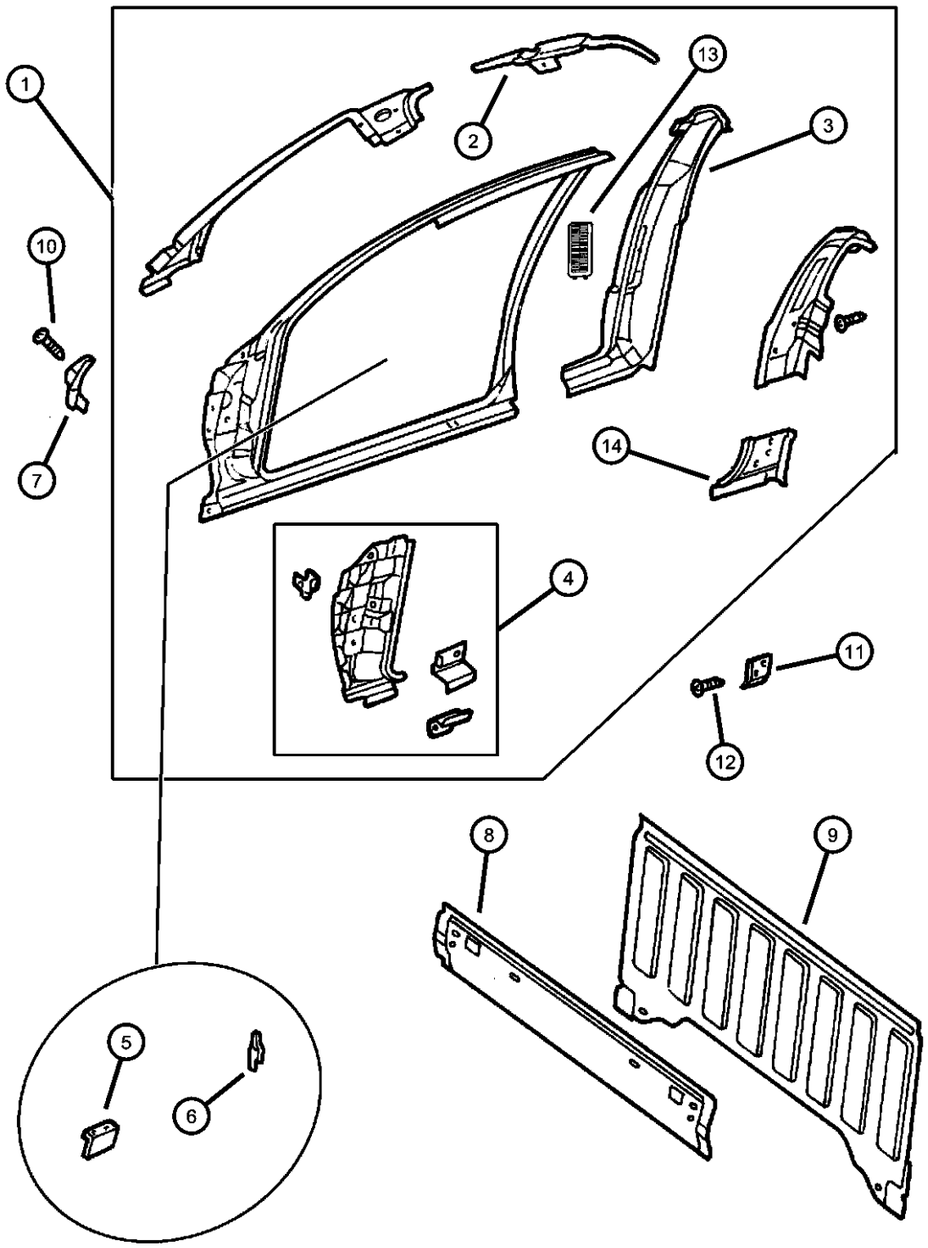

ITEM	PART NUMBER	QTY	LINE	SERIES	BODY	ENGINE	TRANS	TRIM	DESCRIPTION
	55255729AB	1			31, 61				Left
-16									BAFFLE, Windshield Pillar
	55255724AB	1			31, 61				Right
	55255725AB	1			31, 61				Left

DAKOTA (AN)

SERIES	LINE	BODY	ENGINE	TRANSMISSION
L = Quad Cab L = Regular Cab L = Club Cab	1 = Dakota 2WD 5 = Dakota 4WD	31 = CLUB CAB 2-DR 6.5 FT BOX 61 = REG CAB 6.5 FT BOX 84 = CREW CAB 4-DR W.B.1	EPO = 2.5L 4 Cyl. EHO = 3.9L 6 Cyl. EMO = 5.9L 8 Cyl. EVO = 4.7L Magnum EHC = 3.9L SMPI V6 EML = 5.9L V8 MPI Engine EPE = 2.5L POWER TECH I-4 Cyl. EVA = 4.7L V8 MPI	DDC = TRANSMISSION - 5-SPEED HD MANUAL DG4 = TRANSMISSION-MULTI-SPEED AUTO, 45RFE DGK = TRANSMISSION - 4-SPD. AUTOMATIC,42RE DGT = TRANSMISSION - 4-SPD. AUTOMATIC,46RE DGO = AUTO. TRANS.

Aperture Panel Bodyside Club Cab
Figure SAN-820

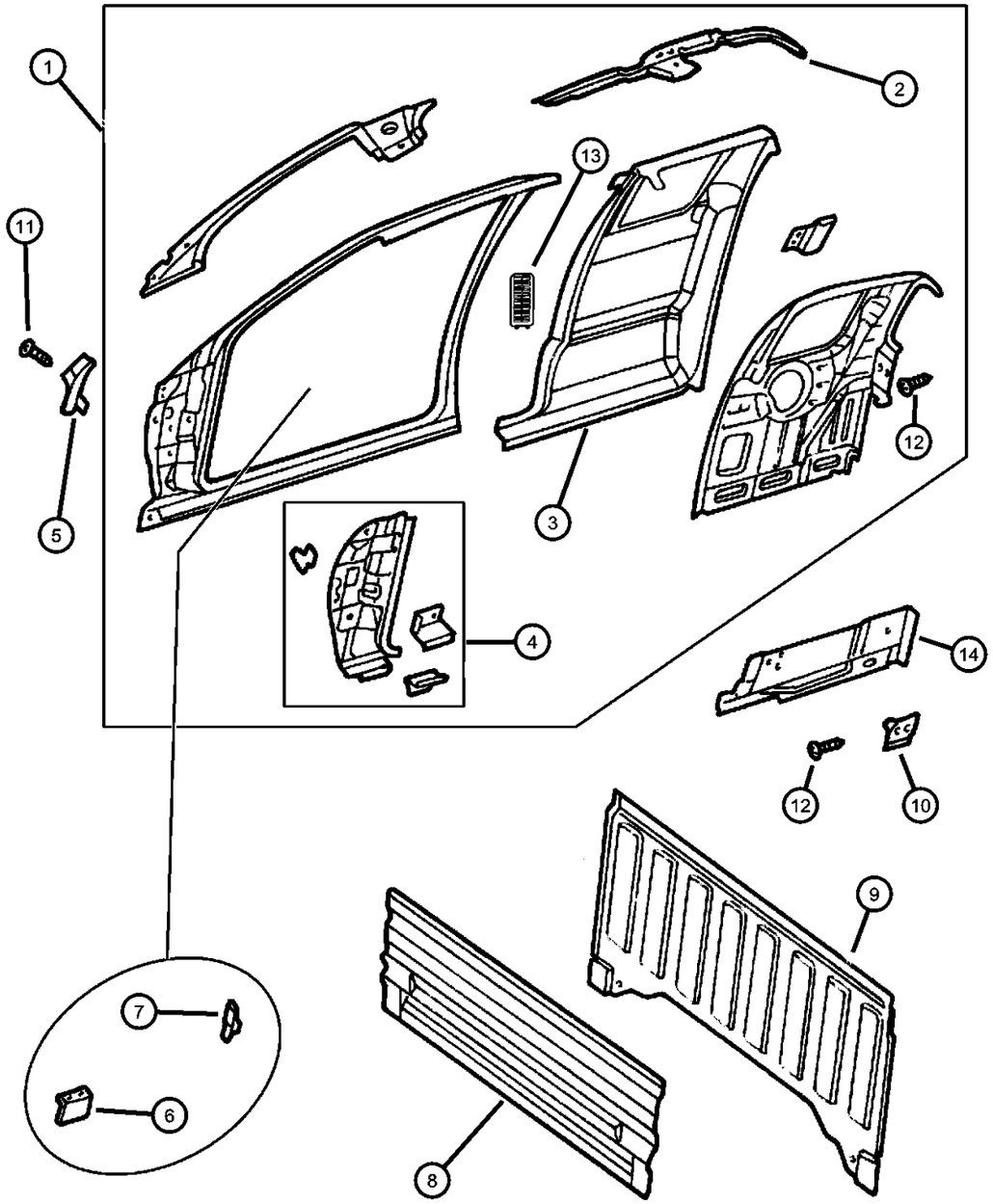

ITEM	PART NUMBER	QTY	LINE	SERIES	BODY	ENGINE	TRANS	TRIM	DESCRIPTION
1									PANEL, Body Side Aperture
	04883908AG	1			31, 61				Right
	04883909AG	1			31, 61				Left
2									RAIL, Roof
	55255540AB	1			31				Right
	55255541AB	1			31				Left
3									PANEL, Quarter Extension
	55255520AB	1			31				Right
	55255521AB	1			31				Left
4									PANEL, Body Side Front
	55256968AB	1			31, 61				Right
	55256969AB	1			31, 61				Left
5									REINFORCEMENT, Cowl Side
	55255806AC	1							Right
	55255807AC	1							Left
6									BRACKET, Aperture to Fender
	55255504AB	1			31, 61				Right
	55255505AB	1			31, 61				Left
7	04512871AB	2			31, 61				RETAINER, Door Lock Striker
8	55255814AD	1			31				PANEL, Cab Back
9	55257325AA	1							PANEL, Cab Back
10									REINFORCEMENT, Seat Belt
	55255544	2			31				Right
	55255545	2			31				Left
11	00154649	4			31, 61, 84				SCREW, Pan Head Tapping, .19-16x.625
12	06030441	2			31				PIN, Retainer
13	55055865AD	2			31, 61, 84				EXHAUSTER, Quarter Panel
14									PANEL, Quarter Inner
	55255524AB	1			31				Right
	55255525AB	1			31				Left
-15									BAFFLE, B Pillar
	55255730	1			31, 61				Right

DAKOTA (AN)

SERIES	LINE	BODY	ENGINE	TRANSMISSION
L = Quad Cab L = Regular Cab L = Club Cab	1 = Dakota 2WD 5 = Dakota 4WD	31 = CLUB CAB 2-DR 6.5 FT BOX 61 = REG CAB 6.5 FT BOX 84 = CREW CAB 4-DR W.B.1	EPO = 2.5L 4 Cyl. EHO = 3.9L 6 Cyl. EMO = 5.9L 8 Cyl. EVO = 4.7L Magnum EHC = 3.9L SMPI V6 EML = 5.9L V8 MPI Engine EPE = 2.5L POWER TECH I-4 Cyl. EVA = 4.7L V8 MPI	DDC = TRANSMISSION - 5-SPEED HD MANUAL DG4 = TRANSMISSION-MULTI-SPEED AUTO, 45RFE DGK = TRANSMISSION - 4-SPD. AUTOMATIC,42RE DGT = TRANSMISSION - 4-SPD. AUTOMATIC,46RE DGO = AUTO. TRANS.

AR = use ase required - = Non illustrrated part

<< RETURN TO GROUP INDEX

Aperture Panel Bodyside Club Cab
Figure SAN-820

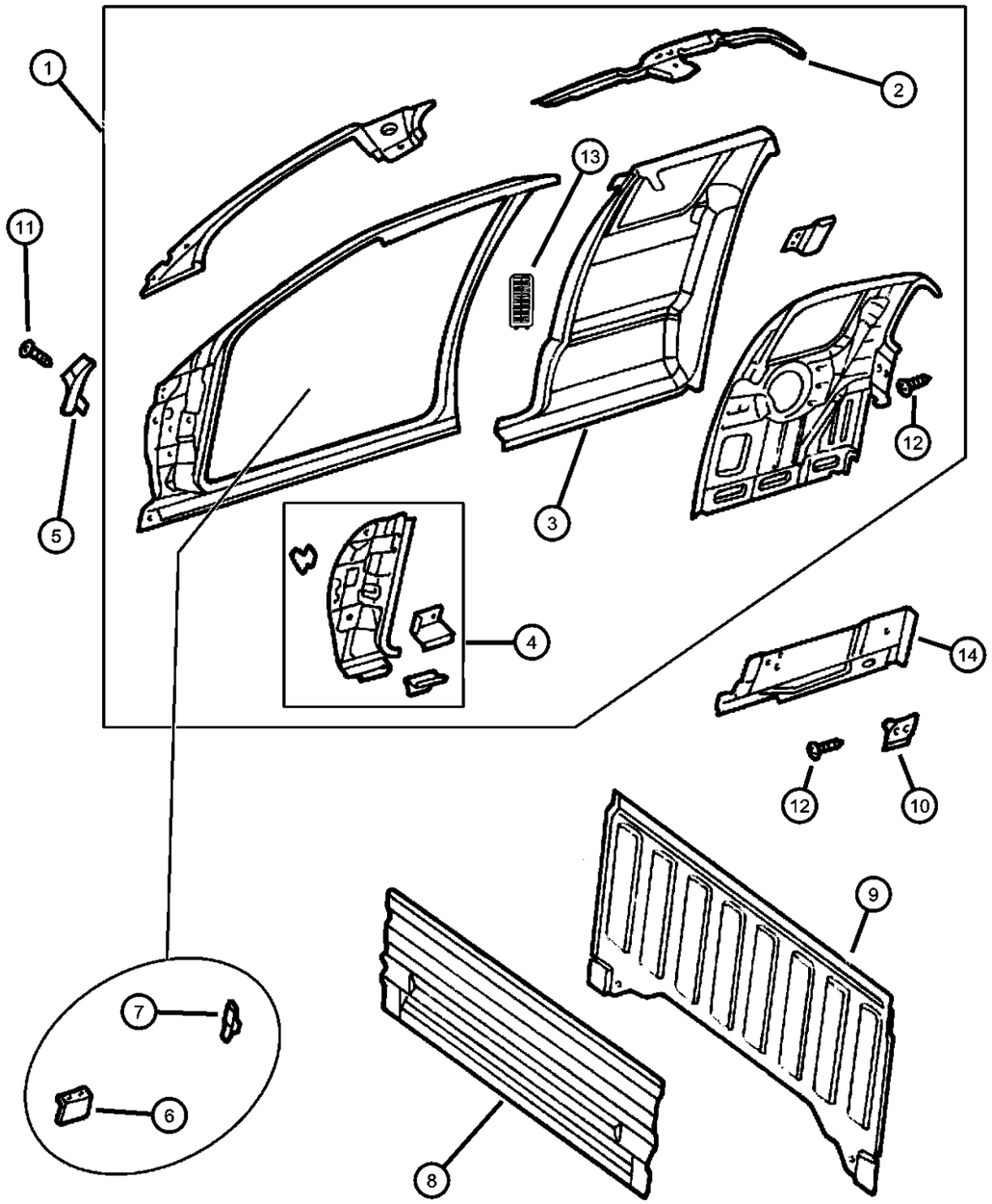

ITEM	PART NUMBER	QTY	LINE	SERIES	BODY	ENGINE	TRANS	TRIM	DESCRIPTION
	55255731	1			31, 61				Left
-16									BAFFLE, Windshield Pillar
	55255724AB	1			31, 61				Right
	55255725AB	1			31, 61				Left

DAKOTA (AN)

SERIES	LINE	BODY	ENGINE	TRANSMISSION
L = Quad Cab L = Regular Cab L = Club Cab	1 = Dakota 2WD 5 = Dakota 4WD	31 = CLUB CAB 2-DR 6.5 FT BOX 61 = REG CAB 6.5 FT BOX 84 = CREW CAB 4-DR W.B.1	EPO = 2.5L 4 Cyl. EHO = 3.9L 6 Cyl. EMO = 5.9L 8 Cyl. EVO = 4.7L Magnum EHC = 3.9L SMPI V6 EML = 5.9L V8 MPI Engine EPE = 2.5L POWER TECH I-4 Cyl. EVA = 4.7L V8 MPI	DDC = TRANSMISSION - 5-SPEED HD MANUAL DG4 = TRANSMISSION-MULTI-SPEED AUTO, 45RFE DGK = TRANSMISSION - 4-SPD. AUTOMATIC,42RE DGT = TRANSMISSION - 4-SPD. AUTOMATIC,46RE DGO = AUTO. TRANS.

Aperture Panel Bodyside, 4 Door
Figure SAN-830

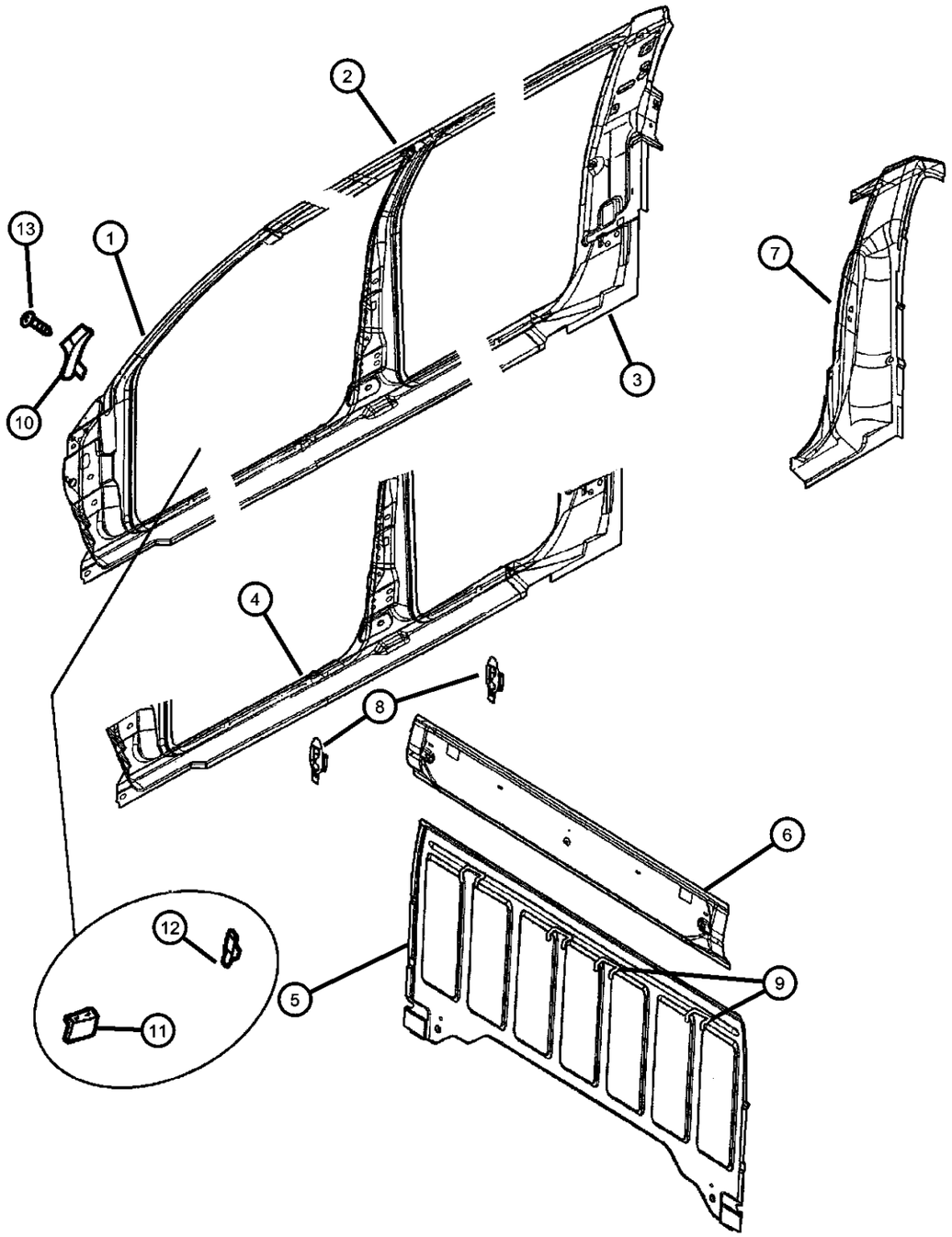

ITEM	PART NUMBER	QTY	LINE	SERIES	BODY	ENGINE	TRANS	TRIM	DESCRIPTION
1									PANEL, Body Side Aperture Front
	05017050AA	1			84				Right
	05017051AA	1			84				Left
2									PANEL, Body Side Aperture Center
	05017052AA	1			84				Right
	05017053AA	1			84				Left
3									PANEL, Body Side Aperture Rear
	05017054AA	1			84				Right
	05017055AA	1			84				Left
4									SILL, Body Side
	05017056AA	1			84				Right
	05017057AA	1			84				Left
5	55257325AA	1							PANEL, Cab Back
6	55257428AA	1			61, 84				REINFORCEMENT, Cab Back
7									PANEL, Quarter Extension
	55257308AA	1			84				Right
	55257309AA	1			84				Left
8	04512871AB	1			84				RETAINER, Door Lock Striker
9	55257382AA	4			84				FOOTMAN LOOP, Hold Down
10									REINFORCEMENT, Cowl Side
	55255806AC	1							Right
	55255807AC	1							Left
11									BRACKET, Aperture to Fender
	55255504AB	1			84				Right
	55255505AB	1			84				Left
12	04512871AB	1			84				RETAINER, Door Lock Striker
13	00154649	4			31, 61, 84				SCREW, Pan Head Tapping, .19-16x.625

DAKOTA (AN)

SERIES	LINE	BODY	ENGINE	TRANSMISSION
L = Quad Cab L = Regular Cab L = Club Cab	1 = Dakota 2WD 5 = Dakota 4WD	31 = CLUB CAB 2-DR 6.5 FT BOX 61 = REG CAB 6.5 FT BOX 84 = CREW CAB 4-DR W.B.1	EPO = 2.5L 4 Cyl. EHO = 3.9L 6 Cyl. EMO = 5.9L 8 Cyl. EVO = 4.7L Magnum EHC = 3.9L SMPI V6 EML = 5.9L V8 MPI Engine EPE = 2.5L POWER TECH I-4 Cyl. EVA = 4.7L V8 MPI	DDC = TRANSMISSION - 5-SPEED HD MANUAL DG4 = TRANSMISSION-MULTI-SPEED AUTO, 45RFE DGK = TRANSMISSION - 4-SPD. AUTOMATIC,42RE DGT = TRANSMISSION - 4-SPD. AUTOMATIC,46RE DGO = AUTO. TRANS.

Sweptline Box, Panel Outer Box And Fuel Filler Door
Figure SAN-910

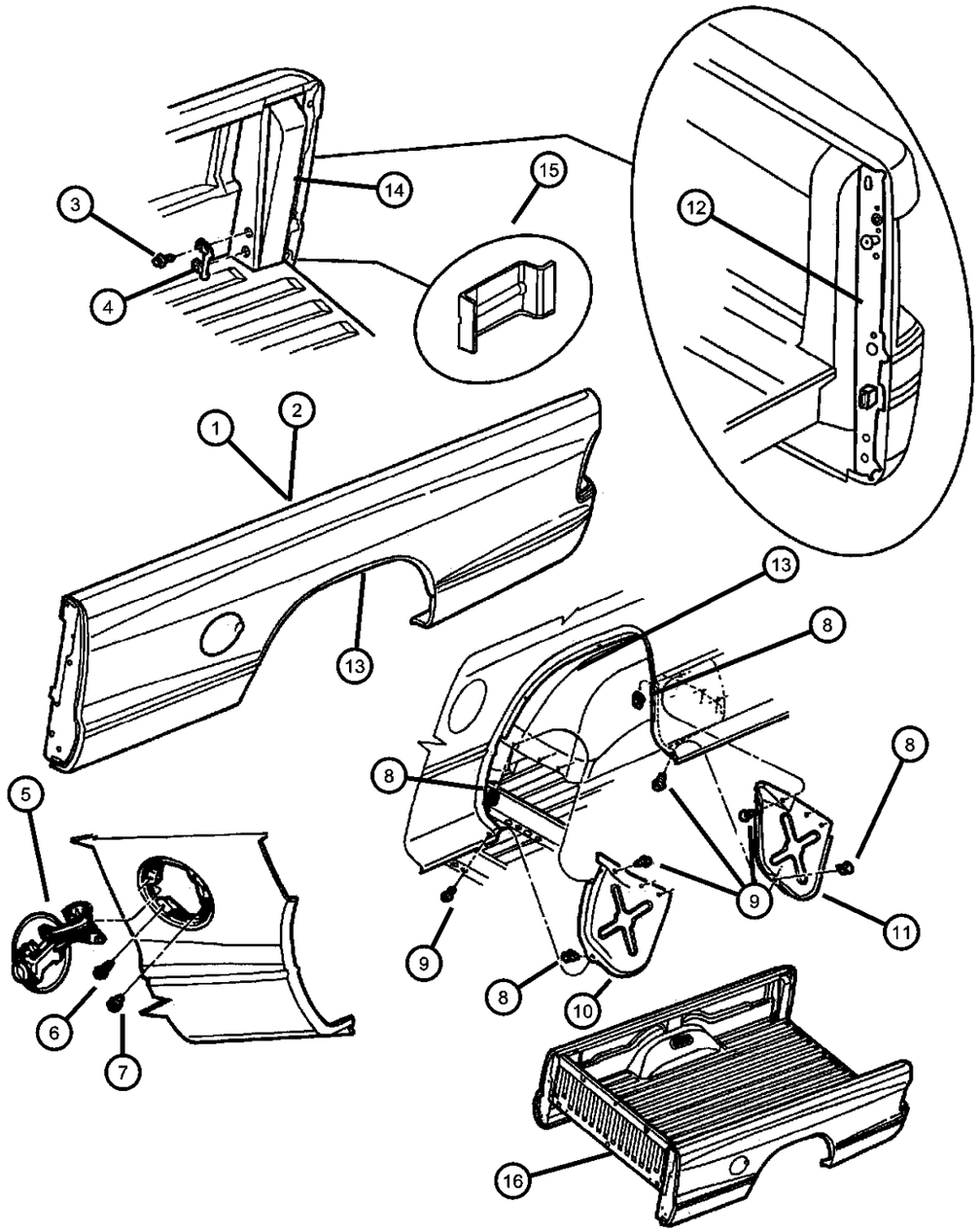

ITEM	PART NUMBER	QTY	LINE	SERIES	BODY	ENGINE	TRANS	TRIM	DESCRIPTION
1									PANEL, Box Side Outer
	55254860	1			31, 61				Right
	55254861	1			31, 61				Left
	55257140AA	1			84				Right
	55257141AA	1			84				Left
2									PANEL, Box Side, Complete
	04883722AA	1			31, 61				Right
	04883723AA	1			31, 61				Left
	55257170AA	1			84				Right
	55257171AA	1			84				Left
3									SCREW AND WASHER, Hex Head, M8x1.25x20
	06102002	4			31, 61				
		8			84				
4									STRIKER, Door Latch
	55033171	2			31, 61				Cargo Tie Down
		4			84				
5	55254864AB	1							DOOR, Fuel Fill
6	06503259	2							SCREW, Tapping, M6x1x20
7	55076327	2							BUMPER, Fuel Door
8	06036009AA	16							NUT, U Multi-Thread, .19-24, Shield Attach
9	06036009AA	16							SCREW AND WASHER, Hex Head, .19-24x1, (NOT SERVICED)
10									SHIELD, Splash
	55254866AB	1							Rear Wheel Opening, Front, Right
	55254867AB	1							Rear Wheel Opening, Front, Left
11									SHIELD, Splash
	55254868AB	1							Rear Wheel Opening, Rear, Right
	55254869AB	1							Rear Wheel Opening, Rear, Left
12									REINFORCEMENT, Box Side
	55257028AB	1			31, 61				Right
		1			84				Right

DAKOTA (AN)

SERIES	LINE	BODY	ENGINE	TRANSMISSION
L = Quad Cab L = Regular Cab L = Club Cab	1 = Dakota 2WD 5 = Dakota 4WD	31 = CLUB CAB 2-DR 6.5 FT BOX 61 = REG CAB 6.5 FT BOX 84 = CREW CAB 4-DR W.B.1	EPO = 2.5L 4 Cyl. EHO = 3.9L 6 Cyl. EMO = 5.9L 8 Cyl. EVO = 4.7L Magnum EHC = 3.9L SMPI V6 EML = 5.9L V8 MPI Engine EPE = 2.5L POWER TECH I-4 Cyl. EVA = 4.7L V8 MPI	DDC = TRANSMISSION - 5-SPEED HD MANUAL DG4 = TRANSMISSION-MULTI-SPEED AUTO, 45RFE DGK = TRANSMISSION - 4-SPD. AUTOMATIC,42RE DGT = TRANSMISSION - 4-SPD. AUTOMATIC,46RE DGO = AUTO. TRANS.

AR = use ase required - = Non illustrrated part

Sweptline Box, Panel Outer Box And Fuel Filler Door
Figure SAN-910

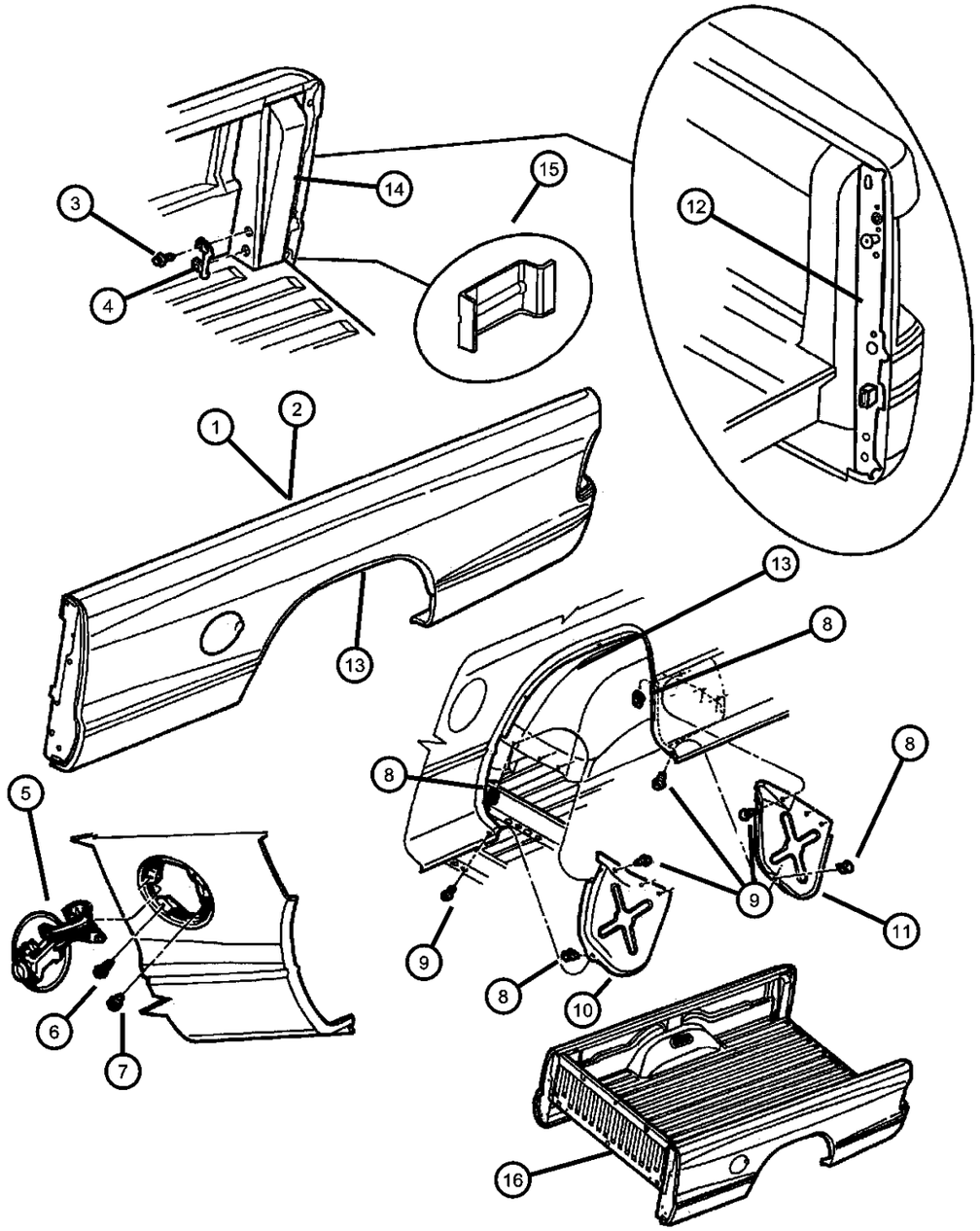

ITEM	PART NUMBER	QTY	LINE	SERIES	BODY	ENGINE	TRANS	TRIM	DESCRIPTION
	55257029AB	1			31, 61				Left
		1			84				Left
13									WHEELHOUSE, Rear Inner
	55256034	2			31, 61				
		1			84				
14									REINFORCEMENT, Box Side
	55257056AC	1			31, 61				Right
		1			84				Right
	55257057AC	1			84				Left
		1			31, 61				Left
15									REINFORCEMENT, Box Crossmember, Also Serviced in REINFORCEMENT, Box Side
	04335034	1			84				
		1			31, 61				
16									BOX, Pickup
	04897270AA	1			31, 61				
	05080828AA	1			84				5 1/2 Foot Box
-17									BRACKET, Tail Lamp
	55255070	1			31, 61				Right
		1			84				Right
		1			84				Left
	55255071	1			31, 61				Left

DAKOTA (AN)

SERIES	LINE	BODY	ENGINE	TRANSMISSION
L = Quad Cab L = Regular Cab L = Club Cab	1 = Dakota 2WD 5 = Dakota 4WD	31 = CLUB CAB 2-DR 6.5 FT BOX 61 = REG CAB 6.5 FT BOX 84 = CREW CAB 4-DR W.B.1	EPO = 2.5L 4 Cyl. EHO = 3.9L 6 Cyl. EMO = 5.9L 8 Cyl. EVO = 4.7L Magnum EHC = 3.9L SMPI V6 EML = 5.9L V8 MPI Engine EPE = 2.5L POWER TECH I-4 Cyl. EVA = 4.7L V8 MPI	DDC = TRANSMISSION - 5-SPEED HD MANUAL DG4 = TRANSMISSION-MULTI-SPEED AUTO, 45RFE DGK = TRANSMISSION - 4-SPD. AUTOMATIC,42RE DGT = TRANSMISSION - 4-SPD. AUTOMATIC,46RE DGO = AUTO. TRANS.

Roof Panels
Figure SAN-1110

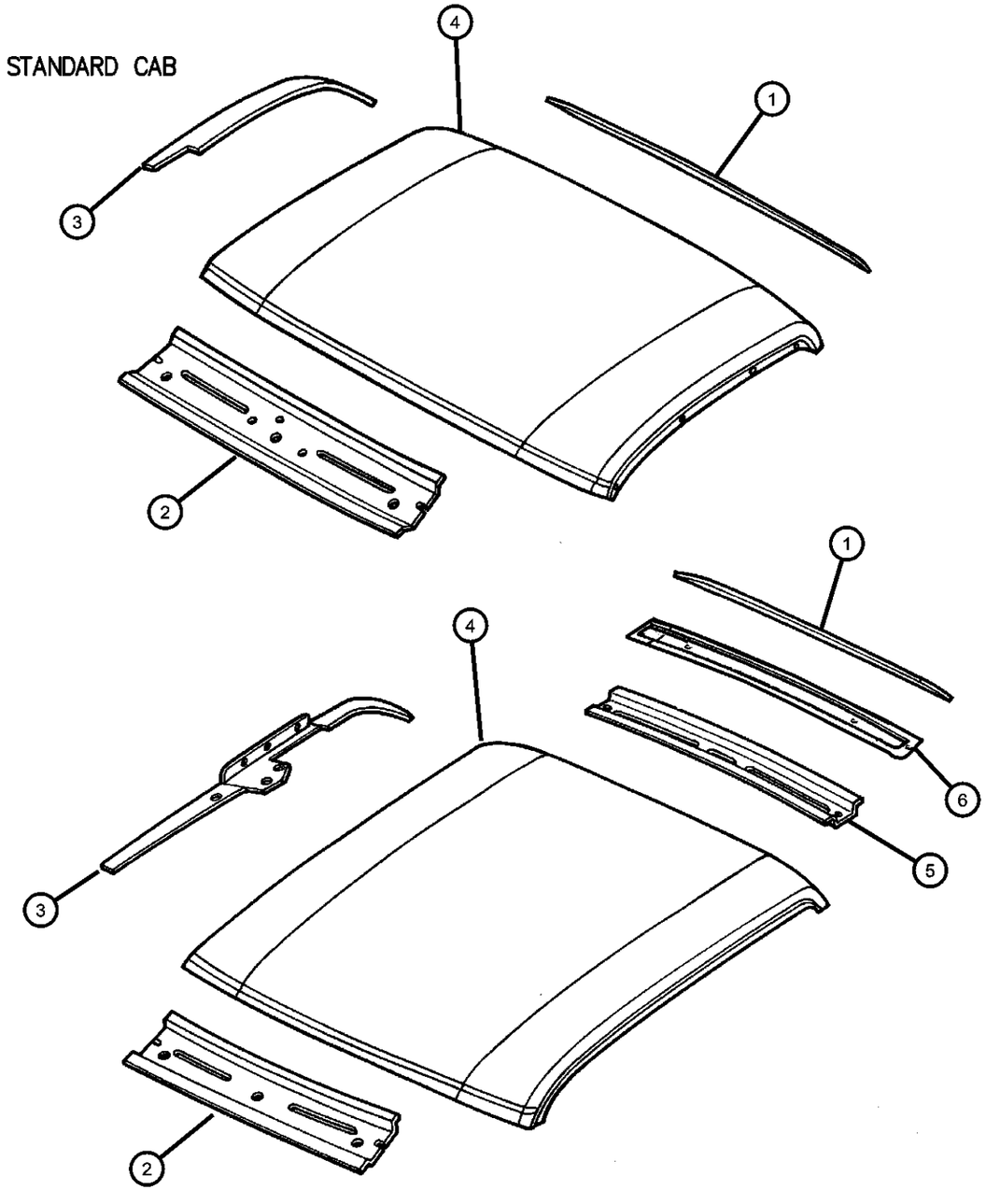

ITEM	PART NUMBER	QTY	LINE	SERIES	BODY	ENGINE	TRANS	TRIM	DESCRIPTION
1									HEADER, Roof Rear
	55255510	1			31, 61				
	55257147AA	1			84				
2	55255503AB	1							HEADER, Roof Front
3									RAIL, Roof
	55255538AB	1			61				Right
	55255539AB	1			61				Left
	55255540AB	1			31				Right
	55255541AB	1			31				Left
	55257166AA	1			84				Right
	55257167AA	1			84				Left
4									PANEL, Roof
	55255529	1			61				
	55255532	1			31				
	55257169AA	1			84				
5	55255502	1			31, 84				BOW, Roof, Extension
6	55257280AA	1			84				BOW, Roof

DAKOTA (AN)

SERIES	LINE	BODY	ENGINE	TRANSMISSION
L = Quad Cab L = Regular Cab L = Club Cab	1 = Dakota 2WD 5 = Dakota 4WD	31 = CLUB CAB 2-DR 6.5 FT BOX 61 = REG CAB 6.5 FT BOX 84 = CREW CAB 4-DR W.B.1	EPO = 2.5L 4 Cyl. EHO = 3.9L 6 Cyl. EMO = 5.9L 8 Cyl. EVO = 4.7L Magnum EHC = 3.9L SMPI V6 EML = 5.9L V8 MPI Engine EPE = 2.5L POWER TECH I-4 Cyl. EVA = 4.7L V8 MPI	DDC = TRANSMISSION - 5-SPEED HD MANUAL DG4 = TRANSMISSION-MULTI-SPEED AUTO, 45RFE DGK = TRANSMISSION - 4-SPD. AUTOMATIC,42RE DGT = TRANSMISSION - 4-SPD. AUTOMATIC,46RE DGO = AUTO. TRANS.

AR = use ase required - = Non illustrrated part

Tailgate
Figure SAN-1310

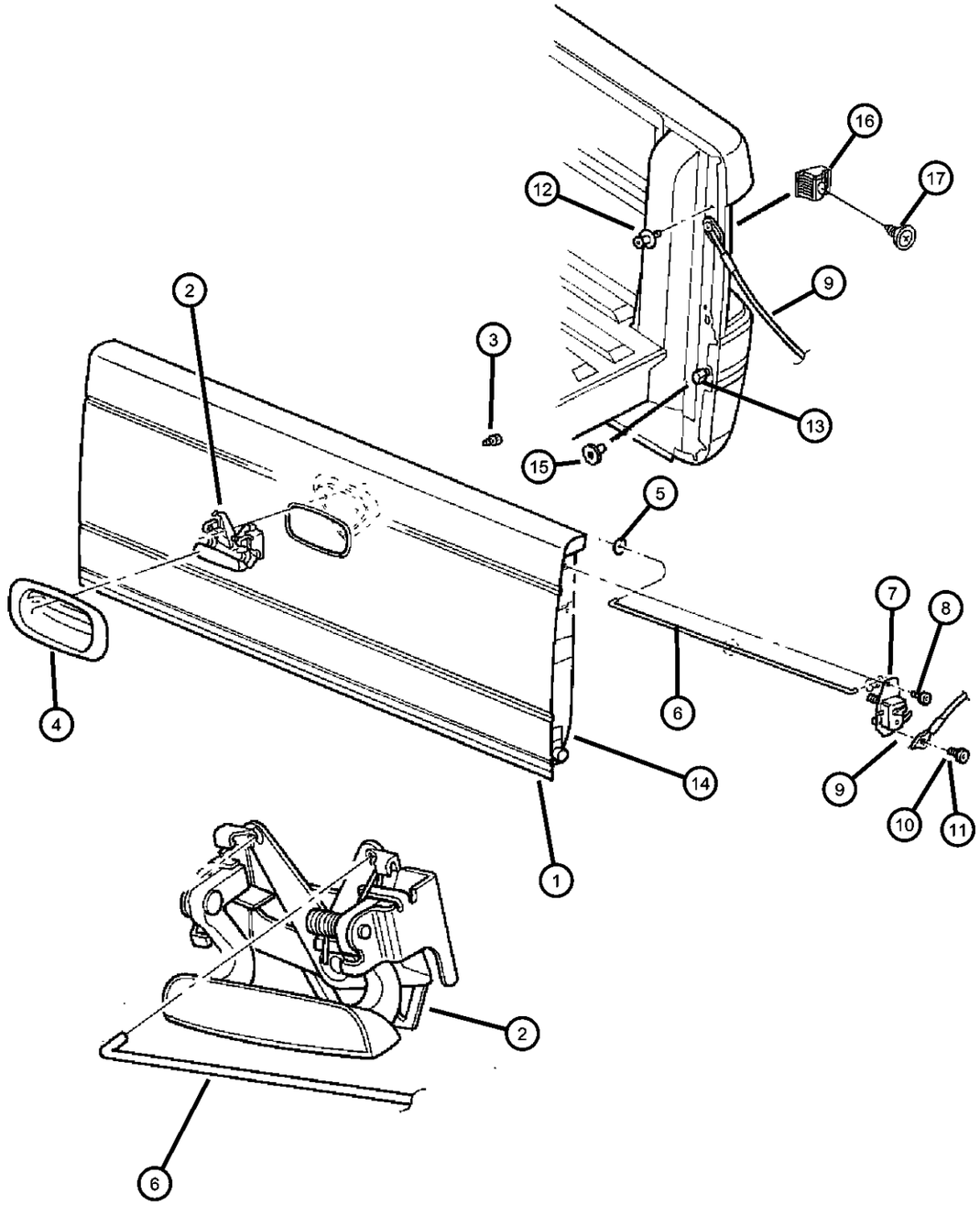

ITEM	PART NUMBER	QTY	LINE	SERIES	BODY	ENGINE	TRANS	TRIM	DESCRIPTION
1	55257014AB	1			31, 61, 84				TAILGATE
2	55256215AB	1							HANDLE, Tailgate
3	06503734	3							SCREW AND WASHER
4	55256216AB	1							BEZEL, Tailgate Handle
5	55034246	2							SILENCER, Anti-Rattle Disc
6	55255700AC	2							ROD, Tailgate Handle to Latch
7									LATCH, Tailgate
	55275484AA	1							Right
	55275485AA	1							Left
8	06036019AA	2							SCREW
9									CABLE, Tailgate
	55174826AB	1							Right
	55174827AB	1							Left
10	55174827AB	1							BOLT, Shoulder, .312-18x.950, (NOT REQUIRED)
11	06036018AA	2							BOLT, Shoulder
12	06031954	2							SCREW AND WASHER, Shoulder, .375-16x1.575
13	55257060	2							BUSHING, Tailgate Pivot
14									BRACKET, Tailgate Pivot
	55257016	1							Right
	55257017	1							Left
15	55257096AA	2							BUMPER, Rubber
16	55257415AA	2							BUMPER, Rubber
17	00153644	2							SCREW, .190-16x.500

DAKOTA (AN)

SERIES	LINE	BODY	ENGINE	TRANSMISSION
L = Quad Cab	1 = Dakota 2WD	31 = CLUB CAB 2-DR 6.5 FT BOX	EPO = 2.5L 4 Cyl.	DDC = TRANSMISSION - 5-SPEED HD MANUAL
L = Regular Cab	5 = Dakota 4WD	61 = REG CAB 6.5 FT BOX	EHO = 3.9L 6 Cyl.	DG4 = TRANSMISSION-MULTI-SPEED AUTO, 45RFE
L = Club Cab		84 = CREW CAB 4-DR W.B.1	EMO = 5.9L 8 Cyl.	DGK = TRANSMISSION - 4-SPD. AUTOMATIC,42RE
			EVO = 4.7L Magnum	DGT = TRANSMISSION - 4-SPD. AUTOMATIC,46RE
			EHC = 3.9L SMPI V6	DGO = AUTO. TRANS.
			EML = 5.9L V8 MPI Engine	
			EPE = 2.5L POWER TECH I-4 Cyl.	
			EVA = 4.7L V8 MPI	